MIAMI-DADE COUNTY, FLORIDA
METRO-DADE FLAGLER BUILDING

BUILDING CODE COMPLIANCE OFFICE
METRO-DADE FLAGLER BUILDING
140 WEST FLAGLER STREET, SUITE 1603
MIAMI, FLORIDA 33130-1563
(305) 375-2901 FAX (305) 375-2908

CONTRACTOR LICENSING SECTION
(305) 375-2527 FAX (305) 375-2558

CONTRACTOR ENFORCEMENT SECTION
(305) 375-2966 FAX (305) 375-2908

PRODUCT CONTROL DIVISION
(305) 375-2902 FAX (305) 372-6339

PRODUCT CONTROL NOTICE OF ACCEPTANCE

Taylor Building Products Company
631 N. First Street
West Branch MI 48661

Your application for Product Approval of:
Outswing Residential Insulated Steel Door - Impact Resistant
under Chapter 8 of the Code of Miami-Dade County governing the use of Alternate Materials and Types of Construction, and completely described herein, has been recommended for acceptance by the Miami-Dade County Building Code Compliance Office (BCCO) under the conditions specified herein.

This approval shall not be valid after the expiration date stated below. BCCO reserves the right to secure this product or material at anytime from a jobsite or manufacturer's plant for quality control testing.
If this product or material fails to perform in the approved manner, BCCO may revoke, modify, or suspend the use of such product or material immediately. BCCO reserves the right to revoke this approval, if it is determined BCCO that this product or material fails to meet the requirements of the South Florida Building Code.

The expense of such testing will be incurred by the manufacturer.

Acceptance No.: 99-0209.02

Expires: 01/14/2003

Raul Rodriguez
Chief Product Control Division

THIS IS THE COVERSHEET, SEE ADDITIONAL PAGES FOR SPECIFIC AND GENERAL CONDITIONS

BUILDING CODE & PRODUCT REVIEW COMMITTEE

This application for Product Approval has been reviewed by the BCCO and approved by the Building Code and Product Review Committee to be used in Dade County, Florida under the conditions set forth above.

Francisco J. Quintana, R.A.
Director
Miami-Dade County
Building Code Compliance Office

Approved: 01/14/2000

Internet mail address: postmaster@buildingcodeonline.com **Homepage: http://www.buildingcodeonline.com**

Taylor Building Products Company

ACCEPTANCE No.: 99-0209.02

APPROVED : JAN 1 4 2000

EXPIRES : JAN 1 4 2003

NOTICE OF ACCEPTANCE: SPECIFIC CONDITIONS

1. SCOPE

1.1 This approves an outswing residential insulated steel door, as described in Section 2 of this Notice of Acceptance, designed to comply with the South Florida Building Code (SFBC), 1994 Edition for Miami-Dade County, for the locations where the pressure requirements, as determined by SFBC Chapter 23, do not exceed the Design Pressure Rating values indicated in the approved drawings.

2. PRODUCT DESCRIPTION

2.1 The **Outswing Residential Insulated Steel Door –Impact Resistant** and its components shall be constructed in strict compliance with the following documents: Drawing No: **TAY-0011** titled "Taylor Door Insulated Steel Edge Outswing Door in a Wood Frame" Sheets 1 through 5 of 5, prepared by R.W. Building Consultant, dated 01/27/99, with revision #2 dated 2/21/00, bearing the Miami-Dade County Product Control approval stamp with the Notice of Acceptance number and approval date by the Miami-Dade County Product Control Division. These documents shall hereinafter be referred to as the approved drawings.

3. LIMITATIONS

3.1 This approval applies to single unit applications of pairs of outswing door and single outswing door only, as shown in approved drawing. Single door unit shall include all components described in the active leaf of this approval.

4. INSTALLATION

4.1 The residential insulated steel door and its components shall be installed in strict compliance with the approved drawings.

4.2 Hurricane protection system (shutters): the installation of this unit **will not require** a hurricane protection system.

5. LABELING

5.1 Each unit shall bear a permanent label with the manufacturer's name or logo, city, state and following statement: "Miami-Dade County Product Control Approved".

6. BUILDING PERMIT REQUIREMENTS

6.1 Application for building permit shall be accompanied by copies of the following:

6.1.1 This Notice of Acceptance

6.1.2 Duplicate copies of the approved drawings, as identified in Section 2 of this Notice of Acceptance, clearly marked to show the components selected for the proposed installation.

6.1.3 Any other documents required by the Building Official or the South Florida Building Code (SFBC) in order to properly evaluate the installation of this system.

Manuel Perez

Manuel Perez, P.E. Product Control Examiner
Product Control Division

Taylor Building Products Company

ACCEPTANCE No.: 99-0209.02

APPROVED : JAN 1 4 2000

EXPIRES : JAN 1 4 2003

NOTICE OF ACCEPTANCE: STANDARD CONDITIONS

1. Renewal of this Acceptance (approval) shall be considered after a renewal application has been filed and the original submitted documentation, including test supporting data, engineering documents, are no older than eight (8) years.

2. Any and all approved products shall be permanently labeled with the manufacturer's name, city, state, and the following statement: "Miami-Dade County Product Control Approved", or as specifically stated in the specific conditions of this Acceptance.

3. Renewals of Acceptance will not be considered if:
   a) There has been a change in the South Florida Building Code affecting the evaluation of this product and the product is not in compliance with the code changes;
   b) The product is no longer the same product (identical) as the one originally approved;
   c) If the Acceptance holder has not complied with all the requirements of this acceptance, including the correct installation of the product;
   d) The engineer who originally prepared, signed and sealed the required documentation initially submitted is no longer practicing the engineering profession.

4. Any revision or change in the materials, use, and/or manufacture of the product or process shall automatically be cause for termination of this Acceptance, unless prior written approval has been requested (through the filing of a revision application with appropriate fee) and granted by this office.

5. Any of the following shall also be grounds for removal of this Acceptance:
   a) Unsatisfactory performance of this product or process.
   b) Misuse of this Acceptance as an endorsement of any product, for sales, advertising or any other purpose.

6. The Notice of Acceptance number preceded by the words Miami-Dade County, Florida, and followed by the expiration date may be displayed in advertising literature. If any portion of the Notice of Acceptance is displayed, then it shall be done in its entirety.

7. A copy of this Acceptance as well as approved drawings and other documents, where it applies, shall be provided to the user by the manufacturer or its distributors and shall be available for inspection at the job site at all time. The engineer need not reseal the copies.

8. Failure to comply with any section of this Acceptance shall be cause for termination and removal of Acceptance.

9. This Notice of Acceptance consists of pages 1, 2 and this last page 3.

Manuel Perez, P.E. Product Control Examiner
Product Control Division

END OF THIS ACCEPTANCE

TAYLOR DOOR

OUTSWING INSULATED STEEL DOOR WITH WOOD FRAMES

GENERAL NOTES

1. THIS PRODUCT IS DESIGNED TO MEET THE SOUTH FLORIDA BUILDING CODE 1994 EDITION FOR MIAMI–DADE COUNTY.
2. WOOD BUCKS BY OTHERS, MUST BE ANCHORED PROPERLY TO TRANSFER LOADS TO THE STRUCTURE.
3. PRODUCT ANCHORS SHALL BE AS LISTED AND SPACED AS SHOWN ON DETAILS. ANCHOR EMBEDMENT TO BASE MATERIAL SHALL BE BEYOND WALL DRESSING OR STUCCO.
4. THIS PRODUCT MEETS IMPACT RESISTANCE CRITERIA.
5. DESIGNED PRESSURE RATING SHALL BE AS FOLLOWS: –SEE DESIGN PRESSURE RATING TABLE SHEET ONE.
6. THIS SYSTEM DOES MEET THE WATER REQUIREMENTS IN MIAMI–DADE COUNTY.

RESIDENTIAL INSULATED STEEL DOOR
(Common to all frame conditions)

Door Leaf Construction:
Face sheets:
24 ga. (0.021") minimum thickness,
26 ga. (0.018") minimum thickness,
Galvanized steel A–525 commercial quality – AKDQ per ASTM 620 with yield strength Fy(ave.)=
MINIMUM = 10,037.25 PSI (SEE CHART SHEET 2)
Core design: Polyurethane core, two–parts Isopolyurethane Baytherm 860 Rigid Foam, with 2.15 lbs. density. (Bayer Corp.).
Construction: Flush or embossed type. The vertical edges are extensions of the skin, rolled formed to a mechanical interlock.
Frame Construction: Finger jointed Ponderosa Pine
See sheet 4 of 5.

DESIGN PRESSURE RATING		
WHERE WATER INFILTRATION REQUIREMENT IS NEEDED		
DOOR MODEL	POSITIVE	NEGATIVE
UNI–DOOR SINGLE & DOUBLE, 8–0	+ 45.0 PSF	– 45.0 PSF
ECONOMY, SIMPLICITY ROYAL, DURADOR 6–8 DOUBLE	+ 55.0 PSF	– 55.0 PSF
ECONOMY, SIMPLICITY ROYAL, DURADOR 6–8 SINGLE	+ 80.0 PSF	– 80.0 PSF

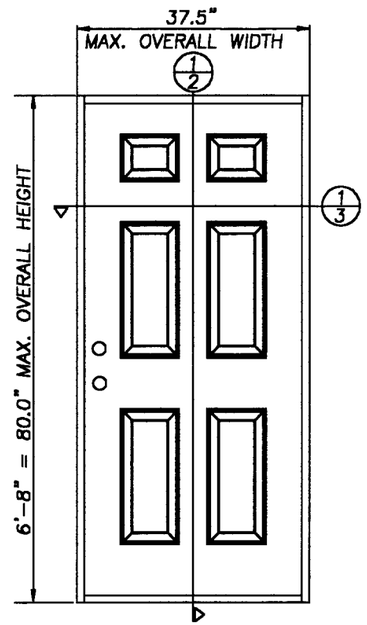

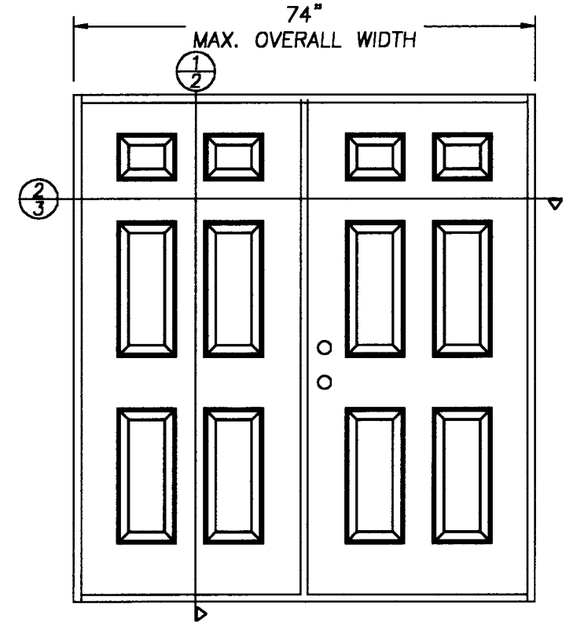

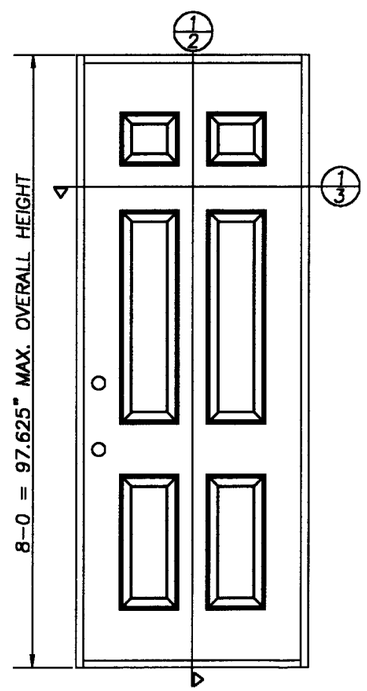

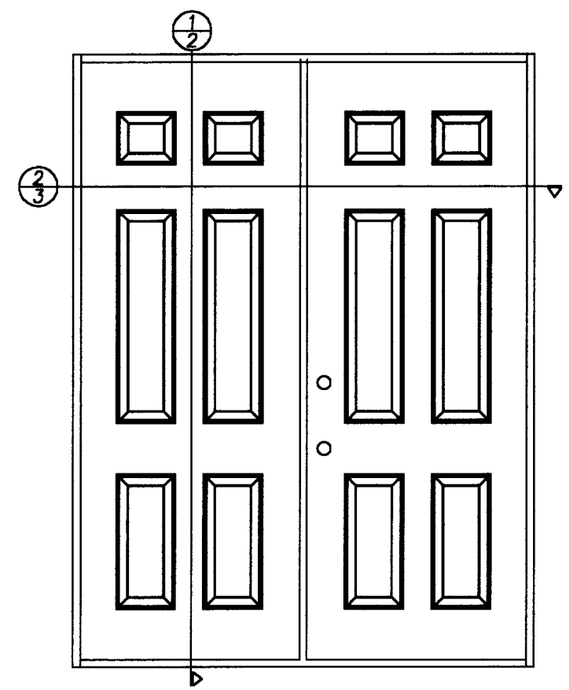

TABLE OF CONTENTS

SHEET #	DESCRIPTION
1	COMMON (GENERAL NOTES, TYPICAL ELEVATION)
2	VERTICAL CROSS SECTION & BILL OF MATERIAL
3	HOIZONTAL CROSS SECTIONS
4	ANCHORING LOCATIONS (6–8 SINGLE & DOUBLE)
5	ANCHORING LOCATIONS (8–0 SINGLE & DOUBLE)

APPROVED AS COMPLYING WITH THE SOUTH FLORIDA BUILDING CODE
DATE February 14, 2000
BY Manuel Perez
PRODUCT CONTROL DIVISION
BUILDING CODE COMPLIANCE OFFICE
ACCEPTANCE NO. 99-0209.02

TAYLOR BUILDING PRODUCTS
631 NORTH FIRST STREET
WEST BRANCH, MI 48661
PH. 517.345.5110
FAX. 517.345.5116

PRODUCT: TAYLOR DOOR INSULATED STEEL EDGE OUTSWING DOOR IN A WOOD FRAME
PART OR ASSEMBLY: ELEVATIONS & GENERAL NOTES

REVISIONS

NO.	DATE		BY
2	2/21/00	GENERAL REVISION	TH
1	1/27/00	CORRECTED FORMAT	TH

RW BUILDING CONSULTANTS, INC.
813.684.3831

DATE: 1/27/99
SCALE: N.T.S.
DWG. BY: TH
CHK. BY: RW
DRAWING NO.: TAY–0011
SHEET 1 OF 5

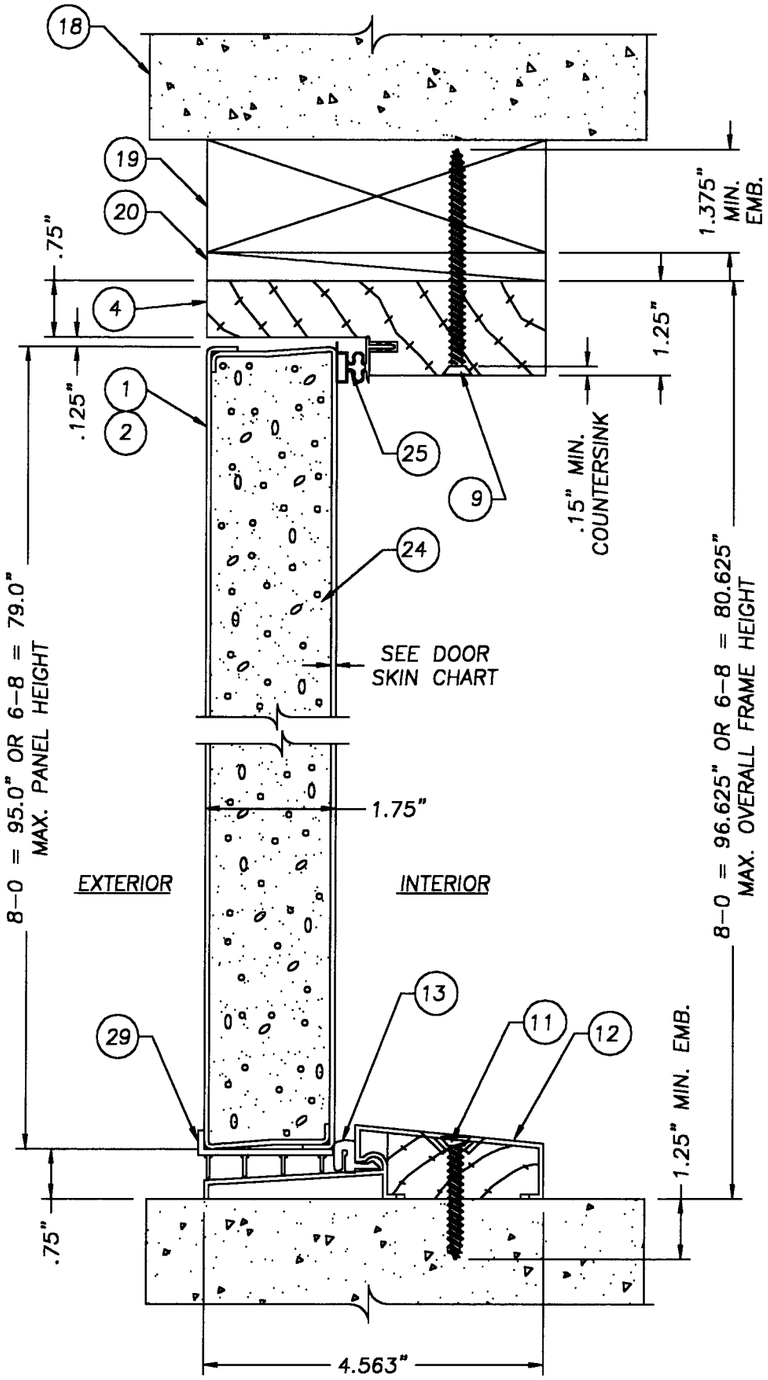

DOOR BOTTOM FOR 6-8 UNIT

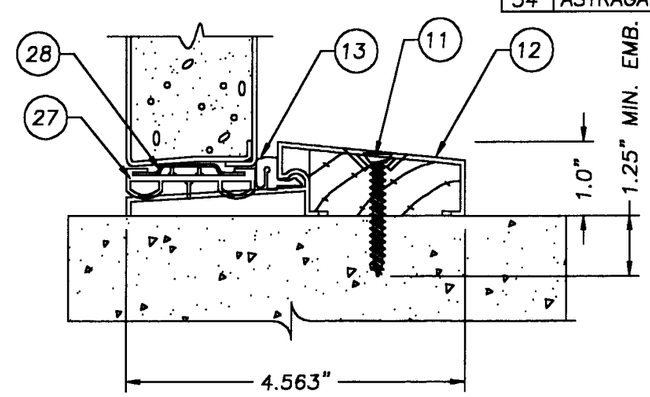

DOOR BOTTOM FOR 8-0 UNIT

1/2 VERTICAL CROSS-SECTION

Item	DESCRIPTION	Material
1	8-0 – 24GA. .021" MINIMUM THICKNESS	STEEL
2	6-8 – 26GA. .018" MINIMUM THICKNESS	STEEL
3	#9 X 1/2" TYPE AB SCREW (HINGE TO DOOR)	STEEL
4	4 9/16" HEADER	WOOD
5	4 9/16" LATCH JAMB	WOOD
6	4 9/16" HINGE JAMB	WOOD
7	NON-REMOVABLE PIN HINGE 4" x 4" HINGE .097" THK.	STEEL
8	#9 x 5/8" lg. (Hinge to Frame)	STEEL
9	#10 PFH WOOD SCREW	STEEL
10	#8 x 2 1/2" LG. WOOD SCREW	STEEL
11	3/16" RAWL TAPPER TAPCON	STEEL
12	BUMP FACE OUTSWING THRESHOLD	ALUMINUM
13	COMPRESSION WEATHERSTRIP	
14	NOT USED	
15	#10 WOOD SCREW X 2" LG.	STEEL
16	KWIKSET TITAN 720 SERIES PASSAGE	
17	KWIKSET 780 SERIES DEADBOLT	
18	MASONRY WALL	
19	2x MATERIAL (BUCK)	WOOD
20	MAX. 1/4" SHIM MATERIAL	
21	ASTRAGAL (IMPERIAL PRODUCTS)	ALUMINUM
22	ASTRAGAL GUARD (IMPERIAL PRODUCTS)	ALUMINUM
23	#12 x 1/2"LG. PANHEAD SHEET METAL SCREW 14 ON 8-0 MODELS & 12 ON 6-8 MODELS	STEEL
24	POLYURETHANE FOAM CORE	FOAM
25	MAGNETIC WEATHERSRIP	VINYL
26	LOCK BLOCK (ALL MODELS)	WOOD
27	DOOR SWEEP (8-0 DOOR)	VINYL
28	DOOR SWEEP RETAINER (8-0 DOOR) ATTACHED TO DOOR BOTTOM W/(5) #6 x 5/8" SMS	STEEL VINYL
29	DOOR SWEEP (6-8 DOOR) ATTACHED TO DOOR BOTTOM W/(5) #6 x 5/8" SMS	
30	DOOR HINGE PLATE (8-0 DOORS) (12GA.)	STEEL
31	DOOR HINGE PLATE (6-8 DOORS) (20GA.)	STEEL
32	OPTIONAL COMPOSITE LOCK BLOCK (FOR USE ON 6'8 MODELS ONLY)	POLYPROPYLENE
33	FLUSH BOLT (TOP & BOTTOM OF ASTRAGAL)	STEEL THROW
34	ASTRAGAL FLUSH BOLT REINFORECMENT	ALUMINUM

DOOR SKIN & YIELD STRENGTH CHART		
DOOR TYPE	GA. & MIN. THK.	MIN. YIELD STRENGTH
UNI-DOOR	24GA. .021" MIN.	10,037.25 PSI
ECONOMY	26GA. .018" MIN.	10,209.79 PSI
SIMPLICITY	26GA. .018" MIN.	10,209.79 PSI
ROYAL	26GA. .018" MIN.	10,209.79 PSI
DURADOR	26GA. .018" MIN.	10,209.79 PSI

TAYLOR BUILDING PRODUCTS
631 NORTH FIRST STREET
WEST BRANCH, MI 48661
PH. 517.345.5110
FAX. 517.345.5116

PRODUCT: TAYLOR STEEL EDGE OUTSWING DOOR IN A WOOD FRAME

PART OR ASSEMBLY: VERTICAL CROSS SECTION & BILL OF MATERIALS

NO.	DATE	REVISIONS	BY
2	2/21/00	GENERAL REVISION	TH
1	1/27/00	CORRECTED FORMAT	TH

RW BUILDING CONSULTANTS, INC.
813.684.3831

APPROVED AS COMPLYING WITH THE SOUTH FLORIDA BUILDING CODE
DATE February 14, 2000
BY [signature]
PRODUCT CONTROL DIVISION
BUILDING CODE COMPLIANCE OFFICE
ACCEPTANCE NO. 99-0209.02

DATE: 1/27/99
SCALE: N.T.S.
DWG. BY: TH
CHK. BY: RW
DRAWING NO.: TAY-0011
SHEET 2 OF 5

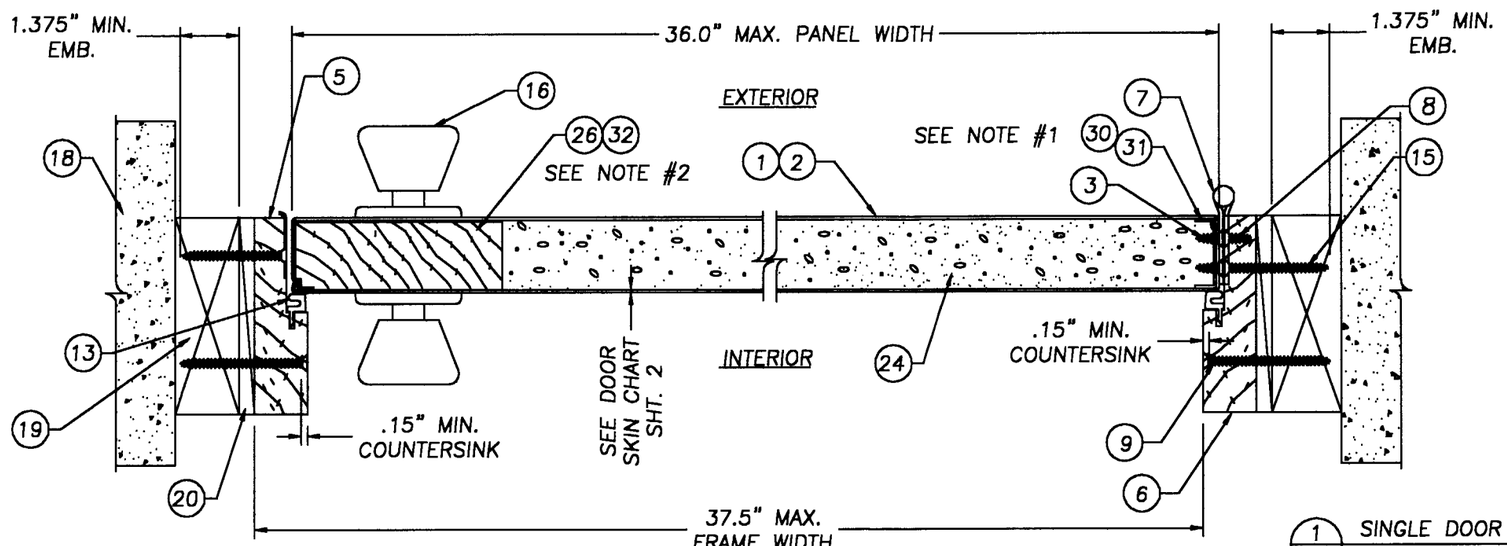

1/3 SINGLE DOOR HORIZONTAL CROSS SECTION

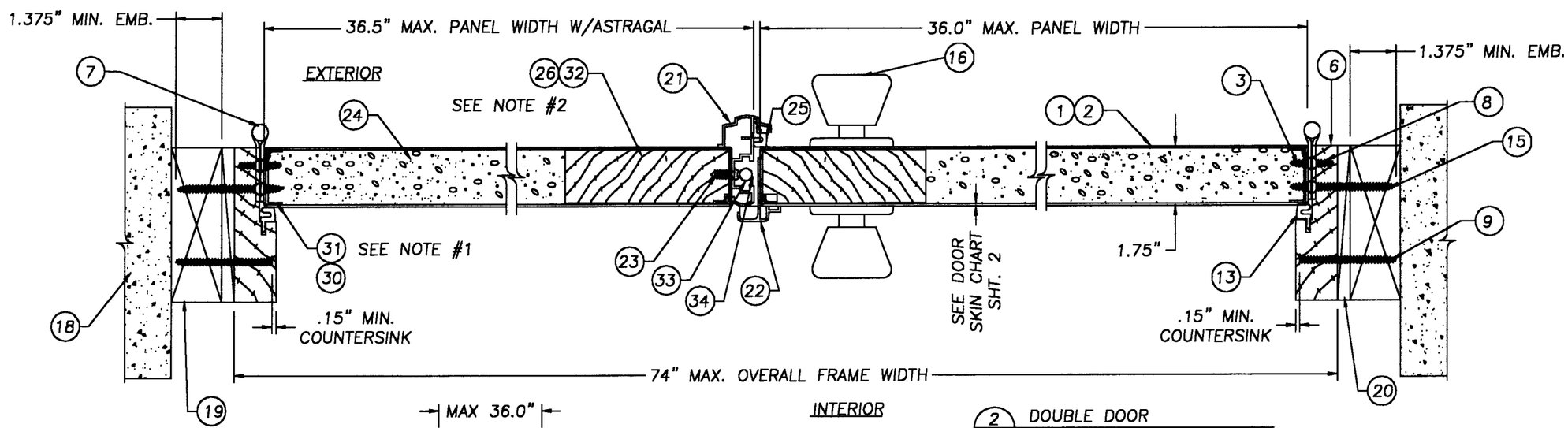

2/3 DOUBLE DOOR HORIZONTAL CROSS SECTION

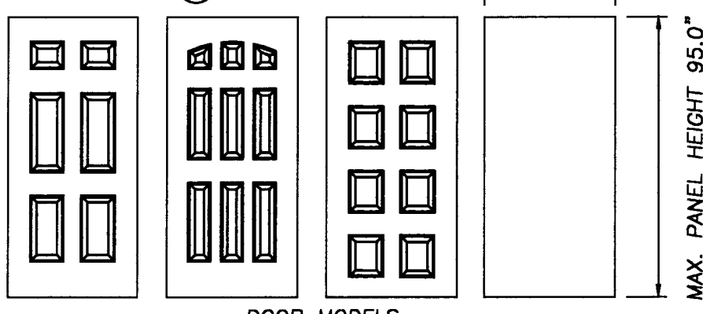

DOOR MODELS

NOTES:
1. ADJUSTABLE HINGE USED ON UNI-DOOR STANDARD HINGE ALL OTHER MODELS
2. OPTIONAL COMPOSITE WOOD FIBER/ POLYPROPYLENE LOCK BLOCK
3. 8'0 MODELS AVAILABLE IN THE UNI-DOOR SERIES ONLY. (SIX PANEL, TEN PANEL & FLUSH)

APPROVED AS COMPLYING WITH THE SOUTH FLORIDA BUILDING CODE
DATE February 14, 2000
BY Manuel Perez
PRODUCT CONTROL DIVISION
BUILDING CODE COMPLIANCE OFFICE
ACCEPTANCE NO. 99-0209.02

TAYLOR BUILDING PRODUCTS
631 NORTH FIRST STREET
WEST BRANCH, MI 48661
PH. 517.345.5110
FAX. 517.345.5116

PRODUCT: TAYLOR DOOR INSULATED STEEL EDGE OUTSWING DOOR IN A WOOD FRAME

PART OR ASSEMBLY: HORIZONTAL CROSS SECTIONS & DOOR MODELS

REVISIONS

NO.	DATE		BY
2	2/21/00	GENERAL REVISION	TH
1	1/27/00	CORRECTED FORMAT	TH

RW BUILDING CONSULTANTS, INC.
813.684.3831

DATE:	1/27/99
SCALE:	N.T.S.
DWG. BY:	TH
CHK. BY:	RW
DRAWING NO.:	TAY-0011
SHEET	3 OF 5

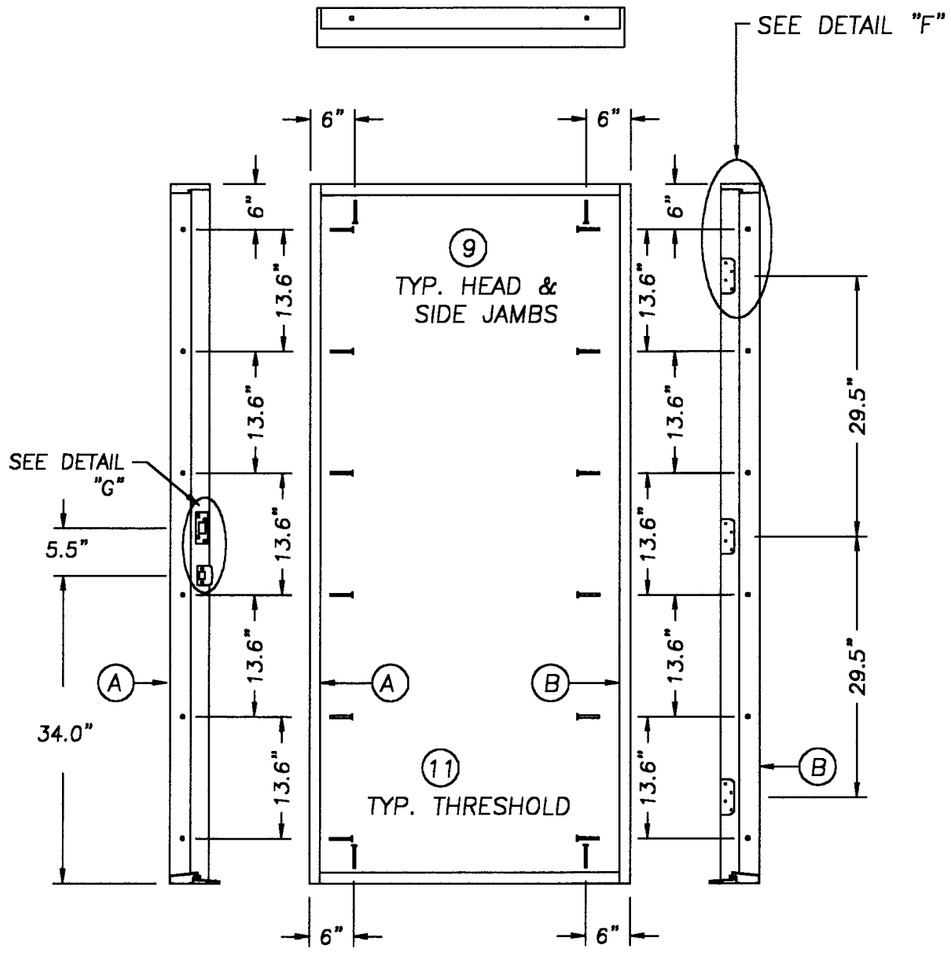

6–8 SINGLE DOOR ANCHORING LAYOUT

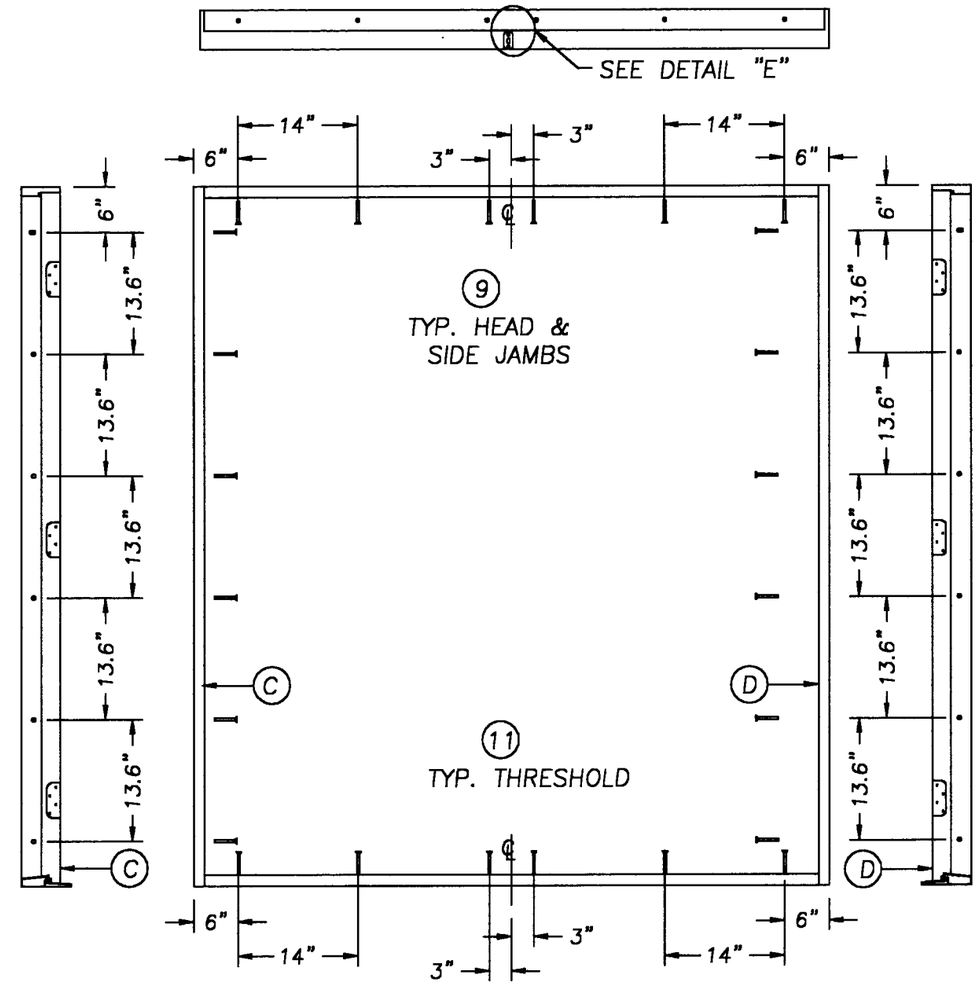

6–8 DOUBLE DOOR ANCHORING LAYOUT

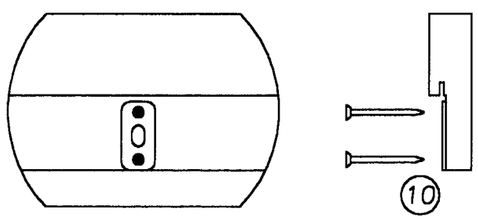

DETAIL "E"
ATTACH ASTRAGAL THROW BOLT
STRIKE PLATE TO FRAME
AS SHOWN.

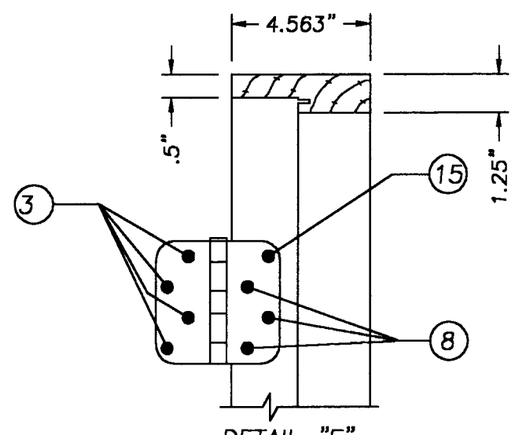

DETAIL "F"
HINGE DETAIL

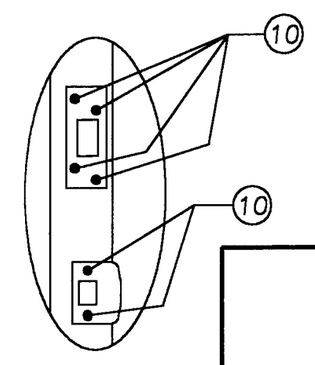

DETAIL "G"
PLATE DETAIL

APPROVED AS COMPLYING WITH THE
SOUTH FLORIDA BUILDING CODE
DATE February 14, 2000
BY Manuel Perez
PRODUCT CONTROL DIVISION
BUILDING CODE COMPLIANCE OFFICE
ACCEPTANCE NO. 99-0609.02

TAYLOR BUILDING PRODUCTS
631 NORTH FIRST STREET
WEST BRANCH, MI 48661
PH. 517.345.5110
FAX. 517.345.5116

PRODUCT: TALOR DOOR INSULATED STEEL EDGE OUTSWING DOOR IN A WOOD FRAME

PART OR ASSEMBLY: 6–8 SINGLE & DOUBLE ANCHORING LAYOUT

REVISIONS

NO.	DATE		BY
1	1/27/00	CORRECTED FORMAT	TH

RW BUILDING CONSULTANTS, INC.
813.684.3831

DATE:	1/27/99
SCALE:	N.T.S.
DWG. BY:	TH
CHK. BY:	RW
DRAWING NO.:	TAY–0011
SHEET	4 OF 5

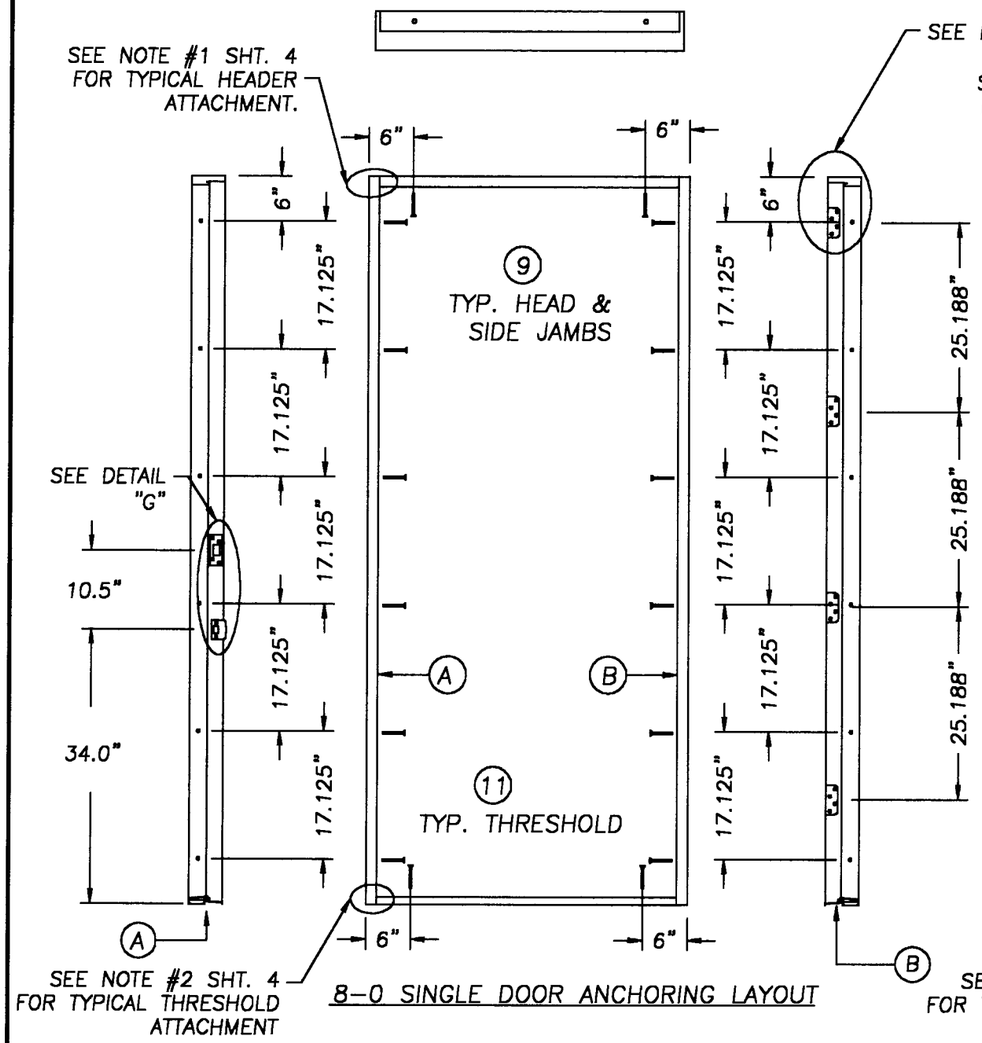

8-0 SINGLE DOOR ANCHORING LAYOUT

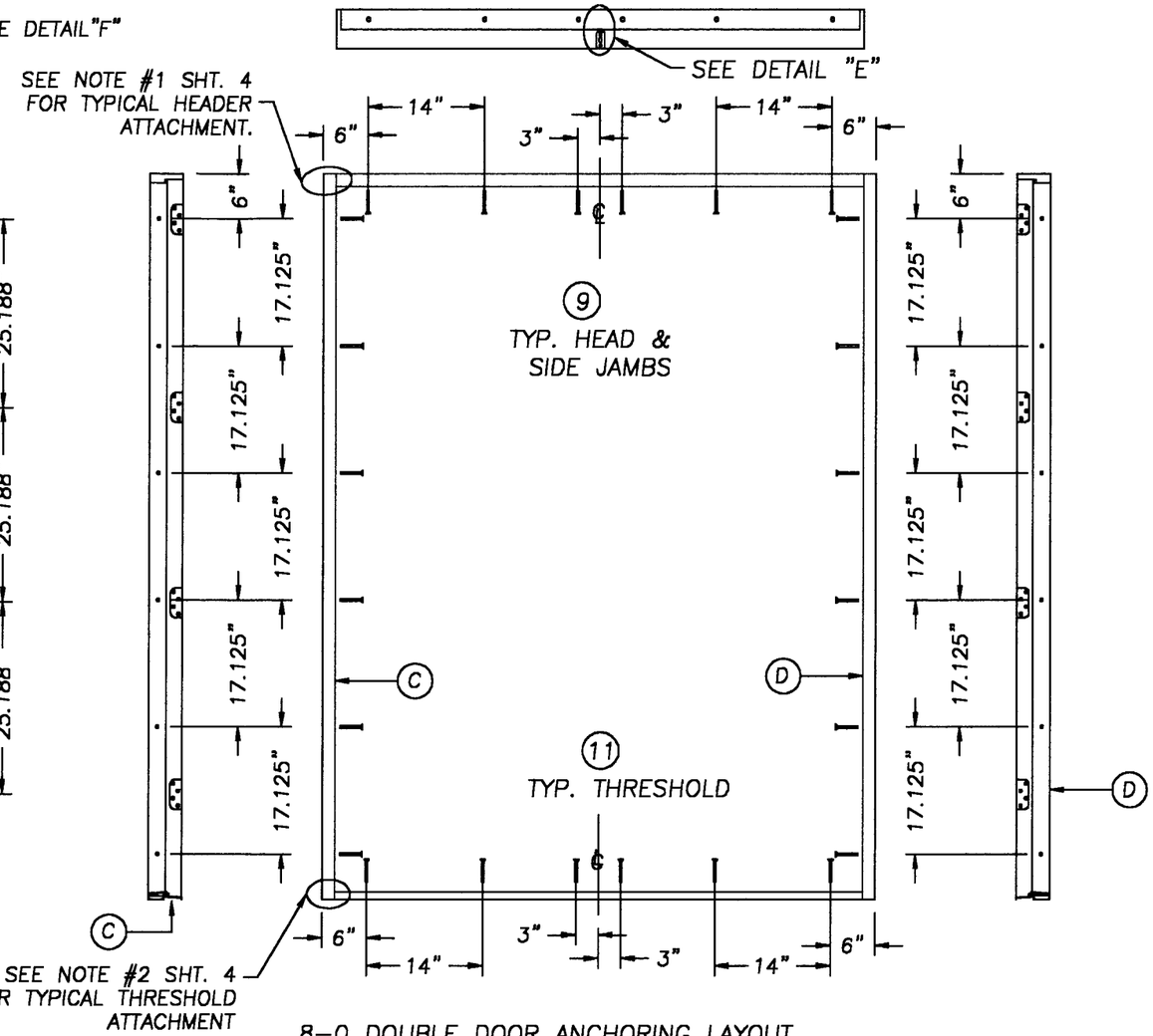

8-0 DOUBLE DOOR ANCHORING LAYOUT

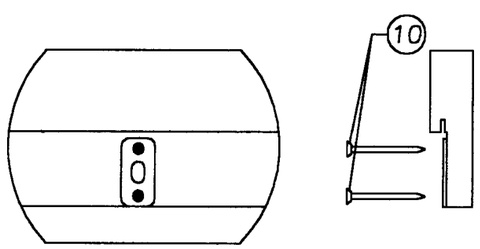

DETAIL "E"
ATTACH ASTRAGAL THROW BOLT STRIKE PLATE TO FRAME AS SHOWN.

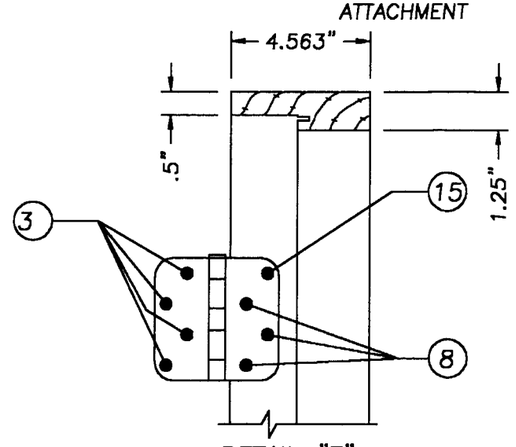

DETAIL "F"
HINGE DETAIL

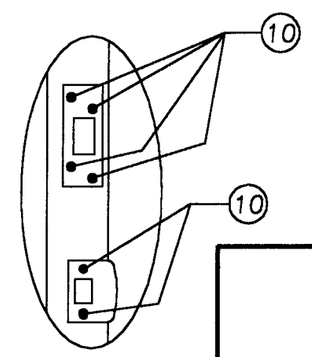

DETAIL "G"
PLATE DETAIL

APPROVED AS COMPLYING WITH THE SOUTH FLORIDA BUILDING CODE
DATE February 14, 2000
BY Manuel Cruz
PRODUCT CONTROL DIVISION
BUILDING CODE COMPLIANCE OFFICE
ACCEPTANCE NO. 99-0209.02

TAYLOR BUILDING PRODUCTS
631 NORTH FIRST STREET
WEST BRANCH, MI 48661
PH. 517.345.5110
FAX. 517.345.5116

PRODUCT: TALOR DOOR INSULATED STEEL EDGE OUTSWING DOOR IN A WOOD FRAME

PART OR ASSEMBLY: 8-0 SINGLE & DOUBLE ANCHORING LAYOUT

REVISIONS

NO.	DATE		BY
2	2/21/00	GENERAL REVISION	TH
1	1/27/00	CORRECTED FORMAT	TH

RW BUILDING CONSULTANTS, INC.
813.684.3831

DATE:	1/27/99
SCALE:	N.T.S.
DWG. BY:	TH
CHK. BY:	RW
DRAWING NO.:	TAY-0011
SHEET	5 OF 5