MIAMI-DADE

MIAMI-DADE COUNTY, FLORIDA
METRO-DADE FLAGLER BUILDING

BUILDING CODE COMPLIANCE OFFICE
METRO-DADE FLAGLER BUILDING
140 WEST FLAGLER STREET, SUITE 1603
MIAMI, FLORIDA 33130-1563
(305) 375-2901 FAX (305) 375-2908

CONTRACTOR LICENSING SECTION
(305) 375-2527 FAX (305) 375-2558

CONTRACTOR ENFORCEMENT DIVISION
(305) 375-2966 FAX (305) 375-2908

PRODUCT CONTROL DIVISION
(305) 375-2902 FAX (305) 372-6339

PRODUCT CONTROL NOTICE OF ACCEPTANCE

LL Building Products, Inc. (NC)
295 McKay Road
Burgaw ,NC 28425

Your application for Notice of Acceptance (NOA) of:
PR2D Power Roof Vent
under Chapter 8 of the Code of Miami-Dade County governing the use of Alternate Materials and Types of Construction, and completely described herein, has been recommended for acceptance by the Miami-Dade County Building Code Compliance Office (BCCO) under the conditions specified herein.

This NOA shall not be valid after the expiration date stated below. BCCO reserves the right to secure this product or material at any time from a jobsite or manufacturer's plant for quality control testing. If this product or material fails to perform in the approved manner, BCCO may revoke, modify, or suspend the use of such product or material immediately. BCCO reserves the right to revoke this approval, if it is determined by BCCO that this product or material fails to meet the requirements of the South Florida Building Code.

The expense of such testing will be incurred by the manufacturer.

ACCEPTANCE NO.: 99-0816.06
EXPIRES: 10/31/2003

Raul Rodriguez
Chief Product Control Division

THIS IS THE COVERSHEET, SEE ADDITIONAL PAGES FOR SPECIFIC AND GENERAL CONDITIONS
BUILDING CODE & PRODUCT REVIEW COMMITTEE

This application for Product Approval has been reviewed by the BCCO and approved by the Building Code and Product Review Committee to be used in Miami-Dade County, Florida under the conditions set forth above.

Francisco J. Quintana, R.A.
Director
Miami-Dade County
Building Code Compliance Office

APPROVED: 12/05/2000

PRODUCT CONTROL NOTICE OF ACCEPTANCE
ROOFING SYSTEM APPROVAL

Category: Roofing
Sub-Category: 07720 Ventilation
Material: G-90 Galvanized Steel

Approval Date: **December 5, 2000**

Expiration Date: **October 31, 2003**

TRADE NAMES OF PRODUCTS MANUFACTURED OR LABELED BY APPLICANT:

Product	Dimensions	Test Specification	Product Description
PR2D Power Vent	10.41" x 27.5"	PA 100(A)	Powered roof ventilation system

EVIDENCE SUBMITTED:

Test Agency/Identifier	Name	Report	Date
Celotex Corporation Testing Service	PA 100(A)	520315-4	June 1999

APPROVED APPLICATIONS:

Cutout: Vent must be place 18" from ridge line. At chosen location and centered between two roof rafters, cut a 15" diameter hole through shingles and sheathing boards. . Make a mark on the shingles 7" uproof from the top of the cutout, and 7" to the right and left of the cutout edges.

Using marked position as center point, scribe a circle that is the same diameter as the vent throat opening. Starting with the drill hole cut vent hole.

Installation: Vents should be evenly spaced on the rear slope of the roof.

Remove roofing nails from top row of shingles so the flashing of the roof vent will slide under shingles. Apply approved roof cement around the edge of the hole. Carefully slide base of vent under shingles with arrow facing up. Make sure the throat of the vent is centered over vent hole. Fasten the base to roof decking at corners, and 4" o.c. 1" from the outside edge of the flange and 1" from stack every 45°. with approved roofing nails, keeping heads of nails under shingles where possible. Use a minimum of 24 nails and shall be of sufficient length to penetrate through roof sheathing a minimum of ½". Seal all seams and nails with roofing cement.

Net Free Area: Refer to manufacturers published literature

Slope: 2:12, minimum

Frank Zuloaga, RRC
Roofing Product Control Examiner

LIMITATIONS:

1. Refer to applicable building codes for required ventilation.

2. For PR2D Power Vent, thermostat and wiring shall be installed in compliance with LL Building Products, Inc. published instructions, and in accordance with applicable building codes.

3. This acceptance is for installations over asphaltic shingle roofs only.

4. PR2D Power Roof Vent shall not be installed on roof mean heights greater than 33 feet.

DETAIL DRAWINGS
MODEL PR2D

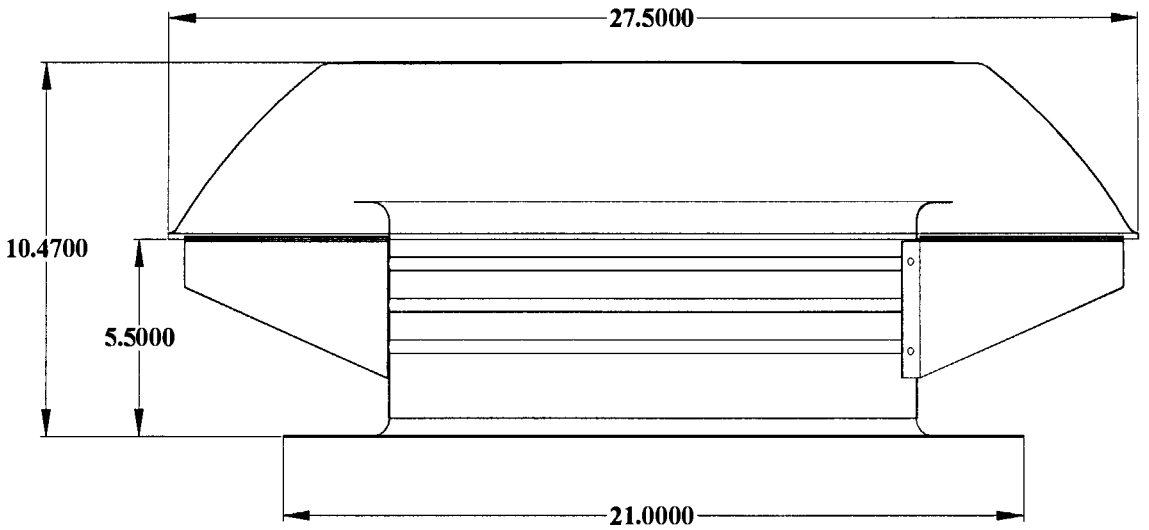

Frank Zuloaga, RRC
Roofing Product Control Examiner

NOTICE OF ACCEPTANCE STANDARD CONDITIONS

1 Renewal of this Acceptance (approval) shall be considered after a renewal application has been filed and the original submitted documentation, including test supporting data, engineering documents, are no older than eight (8) years.

2 Any and all approved products shall be permanently labeled with the manufacturer's name, city, state, and the following statement: "Miami-Dade County Product Control Approved", or as specifically stated in the specific conditions of this Acceptance.

3 Renewals of Acceptance will not be considered if:
- a) There has been a change in the South Florida Building Code affecting the evaluation of this product and the product is not in compliance with the code changes;
- b) The product is no longer the same product (identical) as the one originally approved;
- c) If the Acceptance holder has not complied with all the requirements of this acceptance, including the correct installation of the product;
- d) The engineer who originally prepared, signed and sealed the required documentation initially submitted, is no longer practicing the engineering profession.

4 Any revision or change in the materials, use, and/or manufacture of the product or process shall automatically be cause for termination of this Acceptance, unless prior written approval has been requested (through the filing of a revision application with appropriate fee) and granted by this office.

5 Any of the following shall also be grounds for removal of this Acceptance:
- a) Unsatisfactory performance of this product or process;
- b) Misuse of this Acceptance as an endorsement of any product, for sales, advertising or any other purposes.

6 The Notice of Acceptance number preceded by the words Miami-Dade County, Florida, and followed by the expiration date may be displayed in advertising literature. If any portion of the Notice of Acceptance is displayed, then it shall be done in its entirety.

7 A copy of this Acceptance as well as approved drawings and other documents, where it applies, shall be provided to the user by the manufacturer or its distributors and shall be available for inspection at the job site at all times. The copies need not be resealed by the engineer.

8 Failure to comply with any section of this Acceptance shall be cause for termination and removal of Acceptance.

9 This Acceptance contains pages 1 through 4.

END OF THIS ACCEPTANCE

Frank Zuloaga, RRC
Roofing Product Control Examiner