MIAMI-DADE

MIAMI-DADE COUNTY, FLORIDA
METRO-DADE FLAGLER BUILDING

BUILDING CODE COMPLIANCE OFFICE
METRO-DADE FLAGLER BUILDING
140 WEST FLAGLER STREET, SUITE 1603
MIAMI, FLORIDA 33130-1563
(305) 375-2901 FAX (305) 375-2908

CONTRACTOR LICENSING SECTION
(305) 375-2527 FAX (305) 375-2558

CONTRACTOR ENFORCEMENT SECTION
(305) 375-2966 FAX (305) 375-2908

PRODUCT CONTROL DIVISION
(305) 375-2902 FAX (305) 372-6339

PRODUCT CONTROL NOTICE OF ACCEPTANCE

T.M. Window & Door Co.
601 N.W. 12th Ave.
Pompano Beach FL 33069

Your application for Product Approval of:
Series 230 Outswing Alum. French Door w/Sidelites(reinforced)
under Chapter 8 of the Code of Miami-Dade County governing the use of Alternate Materials and Types of Construction, and completely described herein, has been recommended for acceptance by the Miami-Dade County Building Code Compliance Office (BCCO) under the conditions specified herein.

This approval shall not be valid after the expiration date stated below. BCCO reserves the right to secure this product or material at anytime from a jobsite or manufacturer's plant for quality control testing.
If this product or material fails to perform in the approved manner, BCCO may revoke, modify, or suspend the use of such product or material immediately. BCCO reserves the right to revoke this approval, if it is determined BCCO that this product or material fails to meet the requirements of the South Florida Building Code.

The expense of such testing will be incurred by the manufacturer.

Acceptance No.: 99-0902.02

Expires: 06/29/2003

Raul Rodriguez
Chief Product Control Division

THIS IS THE COVERSHEET, SEE ADDITIONAL PAGES FOR SPECIFIC AND GENERAL CONDITIONS

BUILDING CODE & PRODUCT REVIEW COMMITTEE

This application for Product Approval has been reviewed by the BCCO and approved by the Building Code and Product Review Committee to be used in Dade County, Florida under the conditions set forth above.

Francisco J. Quintana, R.A.
Director
Miami-Dade County
Building Code Compliance Office

Approved: 06/29/2000

Internet mail address: postmaster@buildingcodeonline.com **Homepage: http://www.buildingcodeonline.com**

T. M. Window & Door Company

ACCEPTANCE No.: 99-0902.02

APPROVED : JUN 2 9 2000

EXPIRES : JUN 2 9 2003

NOTICE OF ACCEPTANCE: SPECIFIC CONDITIONS

1. SCOPE

1.1 This approves an aluminum outswing French door, as described in Section 2 of this Notice of Acceptance, designed to comply with the South Florida Building Code (SFBC), 1994 Edition for Miami-Dade County, for the locations where the pressure requirements, as determined by SFBC Chapter 23, do not exceed the Design Pressure Rating values indicated in the approved drawings.

2. PRODUCT DESCRIPTION

2.1 The **Series 230 Outswing Aluminum French Door w/ Sidelites (Reinforced)** and its components shall be constructed in strict compliance with the following documents: Drawing No **PA99230**, titled "Series 230 French Door" Sheets 1 through 9 of 9 dated 10-21-99, latest revised on 04-28-00, signed and sealed by Ballard L. Argus, P.E., bearing the Miami-Dade County Product Control approval stamp with the Notice of Acceptance number and approval date by the Miami-Dade County Product Control Division. These documents shall hereinafter be referred to as the approved drawings.

3. LIMITATIONS

3.1 This approval applies to single unit application of pair of doors and single door with or without reinforced sidelites, as shown in approved drawings. Single door unit shall include all components described in the active leaf of this approval.

4. INSTALLATION

4.1 The aluminum outswing French doors and its components shall be installed in strict compliance with the approved drawings.

4.2 Hurricane protection system (shutters): the installation of this unit **will require** a hurricane protection system.

5. LABELING

5.1 Each unit shall bear a permanent label with the manufacturer's name or logo, city, state and following statement: "Miami-Dade County Product Control Approved".

6. BUILDING PERMIT REQUIREMENTS

6.1 Application for building permit shall be accompanied by copies of the following:

- **6.1.1** This Notice of Acceptance
- **6.1.2** Duplicate copies of the approved drawings, as identified in Section 2 of this Notice of Acceptance, clearly marked to show the components selected for the proposed installation.
- **6.1.3** Any other documents required by the Building Official or the South Florida Building Code (SFBC) in order to properly evaluate the installation of this system.

Ishaq I. Chanda

Ishaq I. Chanda, P.E. Product Control Examiner
Product Control Division

T. M. Window & Door Company

ACCEPTANCE No.: 99-0902.02

APPROVED : JUN 2 9 2000

EXPIRES : JUN 2 9 2003

NOTICE OF ACCEPTANCE: STANDARD CONDITIONS

1. Renewal of this Acceptance (approval) shall be considered after a renewal application has been filed and the original submitted documentation, including test supporting data, engineering documents, are no older than eight (8) years.

2. Any and all approved products shall be permanently labeled with the manufacturer's name, city, state, and the following statement: "Miami-Dade County Product Control Approved", or as specifically stated in the specific conditions of this Acceptance.

3. Renewals of Acceptance will not be considered if:
   a) There has been a change in the South Florida Building Code affecting the evaluation of this product and the product is not in compliance with the code changes;
   b) The product is no longer the same product (identical) as the one originally approved;
   c) If the Acceptance holder has not complied with all the requirements of this acceptance, including the correct installation of the product;
   d) The engineer who originally prepared, signed and sealed the required documentation initially submitted is no longer practicing the engineering profession.

4. Any revision or change in the materials, use, and/or manufacture of the product or process shall automatically be cause for termination of this Acceptance, unless prior written approval has been requested (through the filing of a revision application with appropriate fee) and granted by this office.

5. Any of the following shall also be grounds for removal of this Acceptance:
   a) Unsatisfactory performance of this product or process.
   b) Misuse of this Acceptance as an endorsement of any product, for sales, advertising or any other purpose.

6. The Notice of Acceptance number preceded by the words Miami-Dade County, Florida, and followed by the expiration date may be displayed in advertising literature. If any portion of the Notice of Acceptance is displayed, then it shall be done in its entirety.

7. A copy of this Acceptance as well as approved drawings and other documents, where it applies, shall be provided to the user by the manufacturer or its distributors and shall be available for inspection at the job site at all time. The engineer need not reseal the copies.

8. Failure to comply with any section of this Acceptance shall be cause for termination and removal of Acceptance.

9. This Notice of Acceptance consists of pages 1, 2 and this last page 3.

Ishaq I. Chanda

Ishaq I. Chanda, P. E., Product Control Examiner
Product Control Division

END OF THIS ACCEPTANCE

TM WINDOW & DOOR CO.

601 NW 12 AVE., POMPANO BEACH, FL

Series 230 French/Balcony Aluminum Swing Door System

GENERAL NOTES:

1. PRODUCT APPROVAL DRAWINGS ARE BASED ON THE FOLLOWING TEST REPORT SERIES, BY THE CERTIFIED TESTING LABORATORIES:
   A. TEST REPORT NO. CTLA 136W-6. 12/03/96,REINFORCEMENT PACKAGE 'N'.
   B. TEST REPORT NO. CTLA 136W-5. 12/04/96,REINFORCEMENT PACKAGE 'A'.
   C. TEST REPORT NO. CTLA 136W-4. 12/07/96,REINFORCEMENT PACKAGE 'B'.
   D. TEST REPORT NO. CTLA 136W-1,2,3,12/09/96,REINFORCEMENT PACKAGE 'C'.
   SEE DRAWING SHEETS FOR DETAILS OF REINFORCEMENT PACKAGES LISTED ABOVE.
2. DRAWINGS PROVIDE ANCHOR INFORMATION FOR WOOD FRAME AND STRUCTURAL CONCRETE/CBS CONSTRUCTION ONLY.
3. GLASS TYPE REQUIREMENT:
   A. REINFORCEMENT PKG. 'N'-PROVIDE 1/8" TEMPERED GLASS, OR, 3/16" TEMPERED GLASS MINIMUM.
   B. REINFORCEMENT PACKAGES 'A','B', AND 'C'-PROVIDE 3/16" TEMPERED GLASS MINIMUM.
4. DOOR MINIMUM HARDWARE REQUIREMENTS:
   A. FOR DOORS WITH REINFORCEMENT PACKAGES 'N' AND 'A':
      1. KWIKSET SERIES 400 KEYED ENTRY LOCKSET. GRADE II-ONE (1) EACH ACTIVE PANEL @39 1/2" FROM BOTTOM OF THRESHOLD.
      2. KWIKSET SERIES 630 KEYED THUMBOLT DEAD BOLT, GRADE II-ONE (1) EACH ACTIVE PANEL @ 47 3/4" FROM BOTTOM OF THRESHOLD.
      3. TM STANDARD FLUSH BOLT LOCK, EXTRUDED ALUMINUM BOLT AND PLASTIC FACE-TWO(2) EACH DOOR PANEL.
      4. TM STANDARD BUTT HINGES, EXTRUDED ALUMINUM WITH NYLON BUSHINGS-TWO (2) EACH DOOR PANEL.
   B. FOR DOORS WITH REINFORCEMENT PACKAGE 'B':
      1. KWIKSET SERIES 400 KEYED ENTRY LOCKSET. GRADE II-ONE (1) EACH ACTIVE PANEL @39 1/2" FROM BOTTOM OF THRESHOLD.
      2. KWIKSET SERIES 630 KEYED THUMBOLT DEAD BOLT, GRADE II-ONE (1) EACH ACTIVE PANEL @ 47 3/4" FROM BOTTOM OF THRESHOLD.
      3. TM STANDARD FLUSH BOLT LOCK, EXTRUDED ALUMINUM BOLT AND PLASTIC FACE-TWO(2) EACH DOOR PANEL.
      4. TM STANDARD BUTT HINGES, EXTRUDED ALUMINUM WITH NYLON BUSHINGS-THREE (3) EACH DOOR PANEL.
   C. FOR DOORS WITH REINFORCEMENT PACKAGE 'C':
      1. TITAN SERIES 730AX26 DCP KEYED ENTRY LOCKSET-ONE (1) EACH ACTIVE PANEL @39 1/2" FROM BOTTOM OF THRESHOLD.
      2. TITAN SERIES 780X26 DCP DEAD BOLT-ONE (1) EACH ACTIVE PANEL @ 47 3/4" FROM BOTTOM OF THRESHOLD.
      3. TM STANDARD FLUSH BOLT LOCK, EXTRUDED ALUMINUM BOLT AND PLASTIC FACE-TWO (2) EACH DOOR PANEL.
      4. TM STANDARD BUTT HINGES, EXTRUDED ALUMINUM WITH NYLON BUSHINGS-THREE (3) EACH DOOR PANEL.
5. PROVIDE .350" X .300" NOMINAL WEEP HOLES @ 1/2" FROM EACH END OF EACH PANEL THRESHOLD, WEEPING TO THE EXTERIOR, WITH OPEN CELL FOAM PADS.
6. MINIMUM GLASS BITE REQUIRED AS FOLLOWS:
   TYP. GLASS BITE AT DOOR PANEL = 3/8" ALL SIDES.
   TYP. GLASS BITE AT FIXED SIDELITE = 1/2" ALL SIDES.
7. ALL STRUCTURAL FRAMING MEMEBERS ARE ALUMINUM ALLOY 6063-T6.
8. MIAMI, DADE COUNTY APPROVED SHUTTERS ARE REQUIRED FOR INSTALLATION OF THESE UNITS.

BILL OF MATERIALS

NO.	PART NO.	DESCRIPTION
1	SW28616	FRAME HEAD X AL 6063-T6
2	SW28615	FRAME SILL X AL 6063-T6
3	GW36572	FRAME JAMB X AL 6063-T6
4	GW36571	HINGE STILE x 3" WIDE X AL 6063-T6
5	GW34601	ASTRAGAL STILE X 4" WIDE X AL 6063-T6
6	GW36570	TOP RAIL X 3" WIDE X AL 6063-T6
7	GW36570	BOTTOM RAIL X 3" WIDE X AL 6063-T6
8	GW31826	RAIL W/S ADAPTER
9	GW36573	JAMB NESTING CHANNEL X AL 6063-T6
10	GW30562	EXTR. ALUM. SNAP-IN GLAZING CHANNEL
11	SW27646	ALUM FLUSH BOLTS (2 EA. DR. PANEL)
12	GW34808	EXTRUDED ALUM. ROD HOLDER
13	STEEL	3/8" DIA. ROUND THREADED ROD(2 EA.PANEL)
14	STEEL	3/8" HEX NUT (2 EA. THREADED ROD)
15	STEEL	3/8" FLAT WASHER (2 EA. THREADED ROD)
16	STEEL	3/8" LOCK WASHER (2 EA. THREADED ROD)
17	1225	1/8" GLAZING CHANNEL, VINYL
18	1226	3/16" GLAZING CHANNEL, VINYL
19	GLASS	1/8" THICK FULLY TEMPERED GLASS
20	GLASS	3/16" THICK FULLY TEMPERED GLASS
21	4037	ULTRAFAB CENTERFIN WOOLPILE
22	3033	WIBORG BULB VINYL WEATHERSTRIP
23	GE1002	SILICONE BACK BEDDING
24	DP-750	3/4" PLASTIC HOLE PLUG COVER.
25	#14	PAN HEAD S.S. SMS X 1 1/2" PENETRATION
26	1/4" DIA.	TAPCON ANCHOR X 1 3/4" EMBEDMENT
27	SER 400	KWIKSET KNOB LOCKSET, GRADE II
		1/ACTIVE LEAF,REINF PKG 'N','A','B'
28	SER 630	KWIKSET DEAD BOLT, GRADE II
		1/ACTIVE LEAF,REINF PKG 'N','A','B'
29	SER 730	TITAN 730AX26 DCP LOCKSET
		1/ACTIVE LEAF,REINF PKG 'C'
30	SER 780	TITAN 780AX26 DCP DEAD BOLT
		1/ACTIVE LEAF,REINF PKG 'C'
31	ALUM.	TM STD. BUTT HINGES#37888 W/ #37889
32	STEEL	1/8" X 1 1/2" SQUARE TUBE x 71 1/2"LONG @ LOCK STILE (PANEL HT. -21 5/8").
		X 89" LONG @ HINGE STILES (PANEL HT. -4 1/8")
33	STEEL	.070" X 1 1/2" SQUARE TUBE X FULL LENGTH TOP & BOTT. RAIL.
34	STEEL	1/8" X 1 1/2" X 3" RECTANGULAR TUBE X 92" LONG (PANEL HT -1 1/8")
35	STEEL	1/8" X 1 3/8" X 2 3/4" X 1 3/8" CHANNELX 95 1/2" LONG (FULL HT.)
36	STEEL	1/8" X 2" X 5/8" LEG X 4" LONG 'U' CHANNEL INSIDE VERTICAL MULLIONS,
		WELDED TO STEEL PLATE 1/8" X 2 3/4" X 12"
37	STEEL	3/16" X 1 1/2" SQUARE TUBE X 89" LONG (PANEL HT. - 4 1/8")
38	STEEL	3/16" X 1 1/2" X 3" RECTANGULAR TUBE X 92" LONG (PANEL HT.-1 1/8")
39	STEEL	2 EA. 1/8" X 2 3/4" X 1 1/8" LEG X 95 1/2" LONG (FULL HT.)
		CHANNELS NESTED TO FORM TUBE SECTION.
40	ALUM.	ANGLE SILL ADAPTER WITH 1 1/2" LEG.
41	SCREWS	FRAME ASSEMBLY,#10X1"P.H.,O.H.,S.M.S. 1 @ EA. SCREW BOSS. TYPICAL.

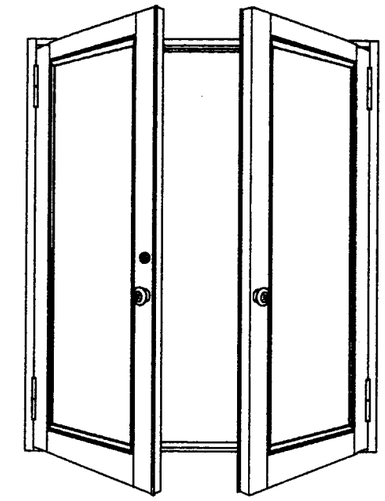

PRODUCT APPROVAL INDEX

SHEET 1 - BILL OF MATERIALS & GENERAL NOTES.
SHEET 2 - PKG. 'N', ELEVATIONS & ANCHOR INFORMATION.
SHEET 3 - PKG. 'N', DETAILS AND COMPARATIVE ANALYSIS TABLE.
SHEET 4 - PKG. 'A', ELEVATIONS & ANCHOR INFORMATION.
SHEET 5 - PKG. 'A', DETAILS AND COMPARATIVE ANALYSIS TABLE.
SHEET 6 - PKG. 'B', ELEVATIONS & ANCHOR INFORMATION.
SHEET 7 - PKG. 'B', DETAILS AND COMPARATIVE ANALYSIS TABLE.
SHEET 8 - PKG. 'C', ELEVATIONS & ANCHOR INFORMATION.
SHEET 9 - PKG. 'C', DETAILS AND COMPARATIVE ANALYSIS TABLE.

APPROVED AS COMPLYING WITH THE SOUTH FLORIDA BUILDING CODE
DATE June 29, 2000
BY Ishaq I. Chanda
PRODUCT CONTROL DIVISION
BUILDING CODE COMPLIANCE OFFICE
ACCEPTANCE NO. 99-0902.02

TM WINDOW & DOOR CO.
601 NW 12 AVE., POMPANO BEACH, FL

Metro Dade Product Approval Index.
SERIES 230 FRENCH DOOR

GLASS TYPE AS NOTED

FILE NO.	CONFIG.	Sheet	Date:	Rev.
PA99230	SEE ELEV.	1 OF 9	10-21-99	4-28-00

BALLARD L. ARGUS CERTIFICATE No. 35696 REGISTERED ENGINEER

4/28/00

SINGLE SIDELITE WITH DOUBLE DOOR & SINGLE DOOR

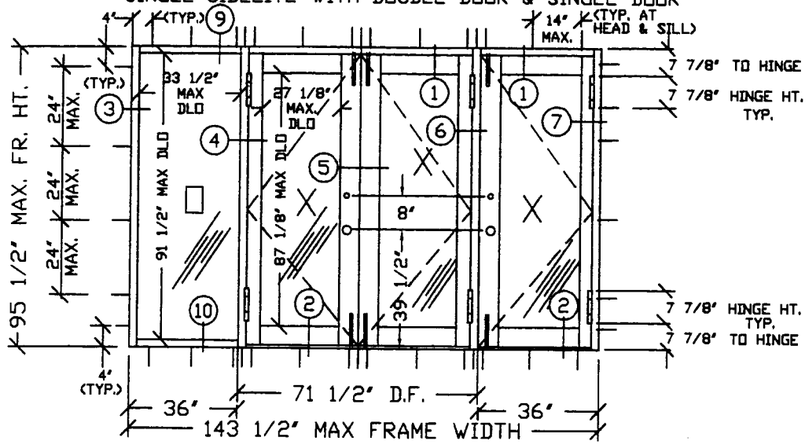

SINGLE DOOR

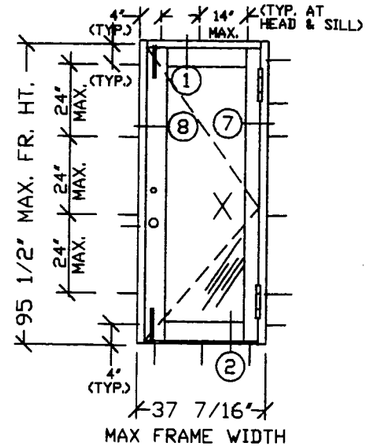

SINGLE DOOR W/SINGLE SIDELITE AT LOCK STILE.

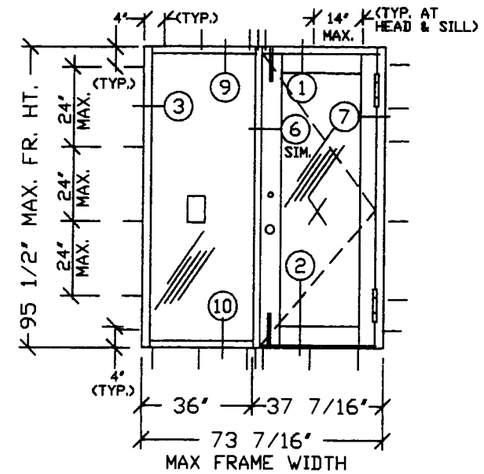

DOUBLE DOOR

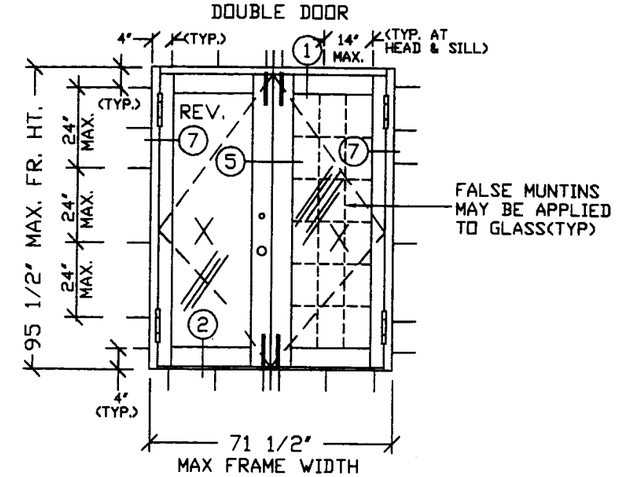

SINGLE DOOR W/ SIDELITE EACH SIDE

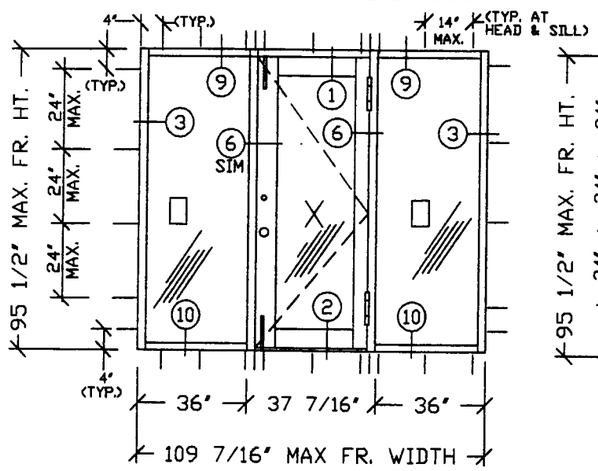

DOUBLE DOOR WITH SINGLE SIDELITE EACH SIDE

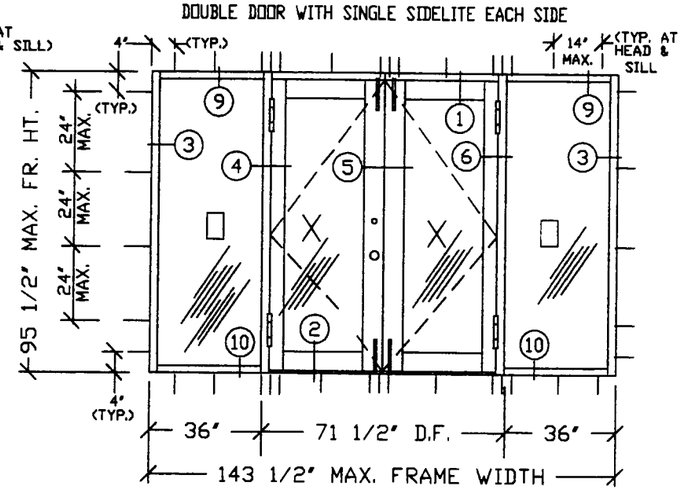

NOTES FOR ANCHORS INTO WOOD FRAME CONSTRUCTION

1. TYPICAL WOOD FRAME ANCHOR TYPE IS #14 STAINLESS STEEL SHEET METAL SCREW X 1 1/2" PENETRATION.
2. MINIMUM WOOD FRAME ANCHOR QUANTITIES ARE DEPICTED AS SOLID LINES LOCATED AROUND THE PERIMETER OF EA. UNIT ELEVATION, DRAWN PERPENDICULAR TO THE FRAME.
3. MAXIMUM SHIM SPACE BETWEEN FRENCH DOOR FRAME AND WOOD FRAME SUBSTRATE = 1/4".
4. LOCATE ALL MEETING STILE AND MULLION END ANCHORS WITHIN 6" FROM CENTERLINE, PER TEST MOCK-UP.
5. LOCATE INTERMEDIATE HEAD AND SILL ANCHORS AT 4" FROM FRAME ENDS & 14" O.C. MAX., PER TEST MOCK-UP. ADDITIONAL CLUSTERS OF THREE (3) ANCHORS ARE REQUIRED AT MEETING STILES OF DOUBLE DOORS AND MULLION JAMBS.
6. LOCATE INTERMEDIATE JAMB ANCHORS AT 4" FROM FRAME ENDS & 24" O.C. MAX., PER TEST MOCK-UP.
7. LOCATE ALL HINGE/LOCK-SET ANCHORS WITHIN 6" FROM THE HINGE/LOCKSET CENTERLINE, PER TEST MOCK-UP.
8. ELEVATIONS ARE SCALED VIEWS OF EQUIVALENT "TEST SIZE" UNITS FOR "X", "OX", "XX", "OXO", OR "OXXO" CONFIGURATIONS.
9. LOCATE HEAD, SILL, AND JAMB INTERMEDIATE ANCHORS FOR OTHER SIZE UNITS PER NOTES 5 AND 6.

NOTES FOR ANCHORS INTO STRUCTURAL CONCRETE/CBS CONSTRUCTION.

1. TYPICAL CONCRETE ANCHOR TYPE IS 1/4" DIA. TAPCON X 1 3/4" EMBEDMENT.
2. MINIMUM CONCRETE ANCHOR QUANTITIES ARE DEPICTED AS SOLID LINES LOCATED AROUND THE PERIMETER OF EACH UNIT ELEVATION, DRAWN PERPENDICULAR TO THE FRAME.
3. MAXIMUM SHIM SPACE BETWEEN THE FRENCH DOOR FRAME AND AND THE CONCRETE/WOOD BUCK SUBSTRATE = 1/4"
4. MINIMUM 1/4" DIA. TAPCON EDGE DISTANCE FROM EDGE OF CONCRETE/BLOCK = 2 1/2" (10 DIA.)
5. MINIMUM SPACING BETWEEN 1/4" DIA. TAPCONS WITHIN "ANCHOR GROUP" = 3" (12 DIA.)
6. MINIMUM 1/4" DIA. TAPCON EMBEDMENT FOR HOLLOW CONCRETE BLOCK = 1 1/2".
7. LOCATE ALL MEETING STILE AND MULLION END ANCHORS WITHIN 6" FROM CENTERLINE, PER TEST MOCK-UP.
8. LOCATE INTERMEDIATE HEAD AND SILL ANCHORS AT 4" FROM FRAME ENDS AND 14" ON CENTER MAXIMUM, PER TEST MOCK-UP. ADDITIONAL CLUSTERS OF THREE (3) ANCHORS ARE REQUIRED AT MEETING STILES OF DOUBLE DOORS AND MULLION JAMBS.
9. LOCATE INTERMEDIATE JAMB ANCHORS AT 4" FROM FRAME ENDS AND 24" ON CENTER MAXIMUM, PER TEST MOCK-UP.
10. LOCATE ALL HINGE/LOCKSET ANCHORS WITHIN 6" FROM HINGE/LOCKSET CENTERLINE, PER TEST MOCK-UP.
11. ELEVATIONS ARE SCALED VIEWS OF EQUIVALENT "TEST SIZE" UNITS FOR "X", "OX", "XX", "OXO", OR "OXXO" CONFIGURATIONS.
12. LOCATE HEAD, SILL, AND JAMB INTERMEDIATE ANCHORS FOR OTHER SIZE UNITS PER NOTES 8 AND 9.

FLUSH BOLT DETAIL

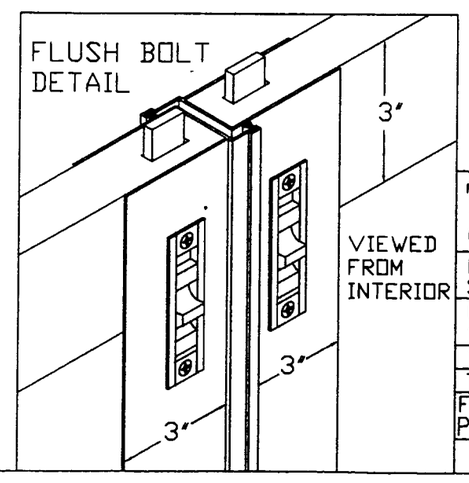

N

APPROVED AS COMPLYING WITH THE SOUTH FLORIDA BUILDING CODE
DATE June 29, 2000
BY Ishaq I. Chunda
PRODUCT CONTROL DIVISION
BUILDING CODE COMPLIANCE OFFICE
ACCEPTANCE NO. 99-0902.02

TM WINDOW & DOOR CO.
601 NW 12 AVE., POMPANO BEACH, FL

PRODUCT DESCRIPTION SERIES 230 FRENCH DOOR				
GLASS TYPE 1/8" OR 3/16" TEMPERED GLASS				
TEST LAB: CERTIFIED TESTING LABORATORIES				
TEST REPORT NO: CTLA 136W-6				
FILE NO.	CONFIG.	Sheet:	Date:	Rev.
PA99230	SEE ELEV.	2 OF 9	10-21-99	4-28-00

BALLARD L. ARGUS CERTIFICATE No. 35666 STATE OF FLORIDA REGISTERED ENGINEER

4/28/00

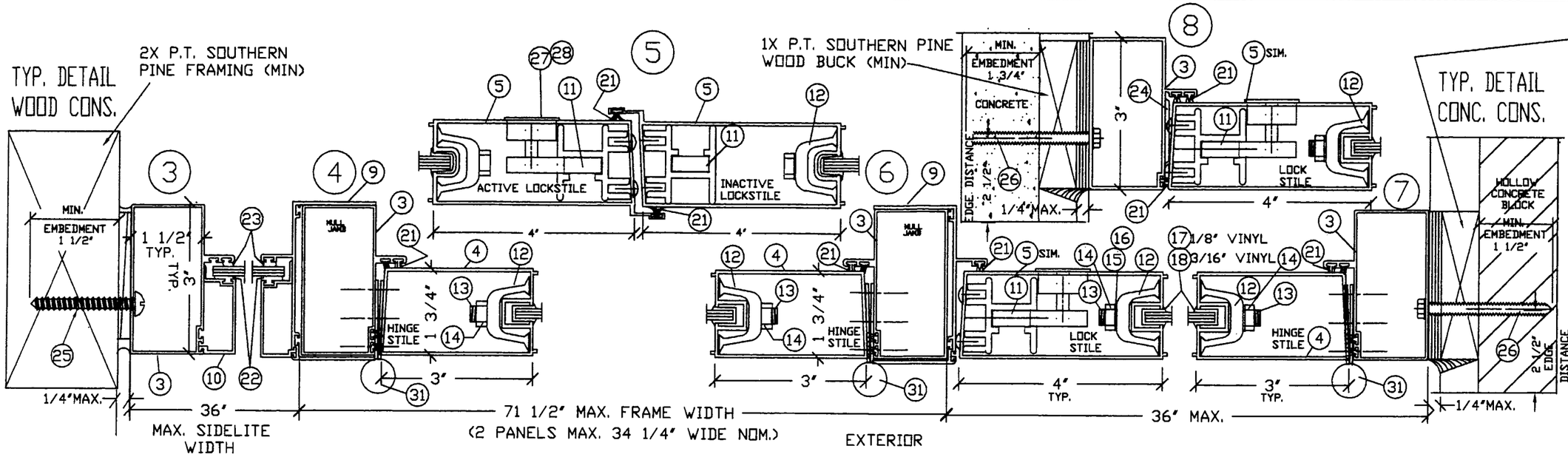

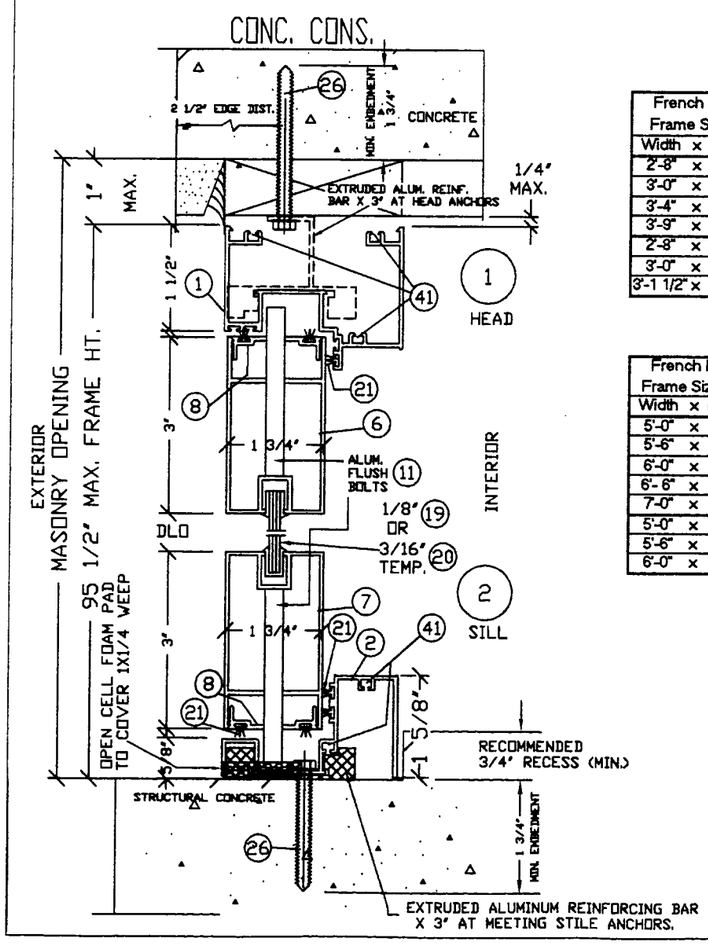

Comparative Analysis Tables of Allowable Design Pressures, for Product Sizes Indicated, for CTL Test No. CTLA 136W - 6 dated 12/3/96

Tabulated values are the Allowable Design Pressure Rating for Product Sizes and Configurations shown, psf.

French Door Frame Size X	Config = "X" 1 5/8" Sill	
Width x Height	+ Dp	- Dp
2'-8" x 6'-8"	53.3	-75.9
3'-0" x 6'-8"	53.3	-55.8
3'-4" x 6'-8"	53.3	-34.8
3'-9" x 6'-8"	53.3	N.A.
2'-8" x 8'-0"	53.3	-57.9
3'-0" x 8'-0"	53.3	-50.8
3'-1 1/2" x 8'-0"	53.3	-48.6

French Door With Sidelites Frame Size X	Configuration = "OXO" 12" S/L Width 1 5/8" Sill		18" S/L Width 1 5/8" Sill		24" S/L Width 1 5/8" Sill		36" S/L Width 1 5/8" Sill	
Width x Height	+ Dp	- Dp	+ Dp	- Dp	+ Dp	- Dp	+ Dp	- Dp
2'-8" x 6'-8"	53.3	-75.9	53.3	-69.5	53.3	-61.7	47.6	-51.2
3'-0" x 6'-8"	53.3	-55.8	53.3	-55.8	53.3	-55.8	45.3	-48.5
3'-4" x 6'-8"	53.3	-34.8	53.3	-34.8	50.9	-34.8	43.4	-34.8
3'-9" x 6'-8"	53.3	N.A.	53.2	N.A.	48.2	N.A.	41.4	N.A.
2'-8" x 8'-0"	41.5	-47.7	36.2	-41.2	32.3	-36.3	26.9	-29.7
3'-0" x 8'-0"	38.5	-44.0	33.9	-38.4	30.4	-34.1	25.6	-28.2
3'-1 1/2" x 8'-0"	37.6	-42.8	33.1	-37.4	29.8	-33.4	25.1	-27.7

French Door With Sidelites Frame Size X	Configuration = "XO" or "OX" 12" S/L Width 1 5/8" Sill		18" S/L Width 1 5/8" Sill		24" S/L Width 1 5/8" Sill		36" S/L Width 1 5/8" Sill	
Width x Height	+ Dp	- Dp	+ Dp	- Dp	+ Dp	- Dp	+ Dp	- Dp
2'-8" x 6'-8"	53.3	-75.9	53.3	-69.5	53.3	-61.7	47.6	-51.2
3'-0" x 6'-8"	53.3	-55.8	53.3	-55.8	53.3	-55.8	45.3	-48.5
3'-4" x 6'-8"	53.3	-34.8	53.3	-34.8	50.9	-34.8	43.4	-34.8
3'-9" x 6'-8"	53.3	N.A.	53.2	N.A.	48.2	N.A.	41.4	N.A.
2'-8" x 8'-0"	41.5	-47.7	36.2	-41.2	32.3	-36.3	26.9	-29.7
3'-0" x 8'-0"	38.5	-44.0	33.9	-38.4	30.4	-34.1	25.6	-28.2
3'-1 1/2" x 8'-0"	37.6	-42.8	33.1	-37.4	29.8	-33.4	25.1	-27.7

French Door Frame Size XX	Config = "XX" 1 5/8" Sill	
Width x Height	+ Dp	- Dp
5'-0" x 6'-8"	53.3	-72.2
5'-6" x 6'-8"	53.3	-62.0
6'-0" x 6'-8"	53.3	-48.2
6'- 6" x 6'-8"	53.3	-31.8
7'-0" x 6'-8"	53.3	-21.8
5'-0" x 8'-0"	53.3	-58.9
5'-6" x 8'-0"	53.0	-53.3
6'-0" x 8'-0"	48.9	-48.2

French Door With Sidelites Frame Size XX	Configuration = "OXXO" 12" S/L Width 1 5/8" Sill		18" S/L Width 1 5/8" Sill		24" S/L Width 1 5/8" Sill		36" S/L Width 1 5/8" Sill	
Width x Height	+ Dp	- Dp	+ Dp	- Dp	+ Dp	- Dp	+ Dp	- Dp
5'-0" x 6'-8"	53.3	-72.2	53.3	-72.2	53.3	-68.6	48.9	-55.9
5'-6" x 6'-8"	53.3	-62.0	53.3	-62.0	53.3	-62.0	47.0	-53.8
6'-0" x 6'-8"	53.3	-48.2	53.3	-48.2	53.3	-48.2	45.3	-48.2
6'- 6" x 6'-8"	53.3	-31.8	53.3	-31.8	51.5	-31.8	43.9	-31.8
7'-0" x 6'-8"	53.3	-21.8	53.3	-21.8	49.8	-21.8	42.6	-21.8
5'-0" x 8'-0"	43.2	-58.9	37.5	-49.5	33.3	-42.7	27.7	-33.9
5'-6" x 8'-0"	40.7	-53.3	35.6	-47.2	31.8	-40.9	26.6	-32.8
6'-0" x 8'-0"	38.5	-48.2	33.9	-45.1	30.4	-39.3	25.6	-31.7

French Door With Sidelites Frame Size XX	Configuration = "XXO" 12" S/L Width 1 5/8" Sill		18" S/L Width 1 5/8" Sill		24" S/L Width 1 5/8" Sill		36" S/L Width 1 5/8" Sill	
Width x Height	+ Dp	- Dp	+ Dp	- Dp	+ Dp	- Dp	+ Dp	- Dp
5'-0" x 6'-8"	53.3	-72.2	53.3	-72.2	53.3	-68.6	48.9	-55.9
5'-6" x 6'-8"	53.3	-62.0	53.3	-62.0	53.3	-62.0	47.0	-53.8
6'-0" x 6'-8"	53.3	-48.2	53.3	-48.2	53.3	-48.2	45.3	-48.2
6'- 6" x 6'-8"	53.3	-31.8	53.3	-31.8	51.5	-31.8	43.9	-31.8
7'-0" x 6'-8"	53.3	-21.8	53.3	-21.8	49.8	-21.8	42.6	-21.8
5'-0" x 8'-0"	43.2	-58.9	37.5	-49.5	33.3	-42.7	27.7	-33.9
5'-6" x 8'-0"	40.7	-53.3	35.6	-47.2	31.8	-40.9	26.6	-32.8
6'-0" x 8'-0"	38.5	-48.2	33.9	-45.1	30.4	-39.3	25.6	-31.7

APPROVED AS COMPLYING WITH THE SOUTH FLORIDA BUILDING CODE
DATE June 29, 2000
BY Ishaq I. Chanda
PRODUCT CONTROL DIVISION
BUILDING CODE COMPLIANCE OFFICE
ACCEPTANCE NO. 99-0902.02

N

TM WINDOW & DOOR CO.
601 NW 12 AVE., POMPANO BEACH, FL

PRODUCT DESCRIPTION
SERIES 230 FRENCH DOOR

GLASS TYPE
1/8" OR 3/16" TEMPERED GLASS

TEST LAB: CERTFIED TESTING LABORATORIES

TEST REPORT NO: CTLA 136W-6

FILE NO.	CONFIG.	Sheet:	Date:	Rev.
PA99230	SEE ELEV.	3 OF 9	10-21-99	4-28-00

BALLARD L. ARGIS CERTIFICATE No. 45585 REGISTERED ENGINEER

4/28/00

SINGLE SIDELITE WITH DOUBLE DOOR & SINGLE DOOR

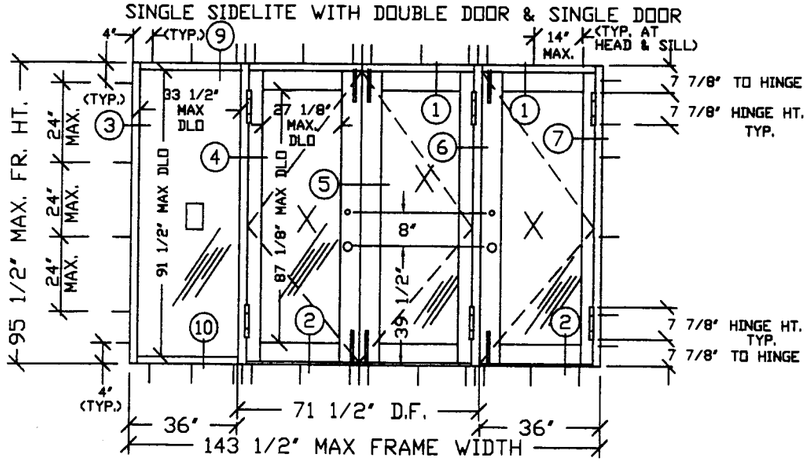

SINGLE DOOR

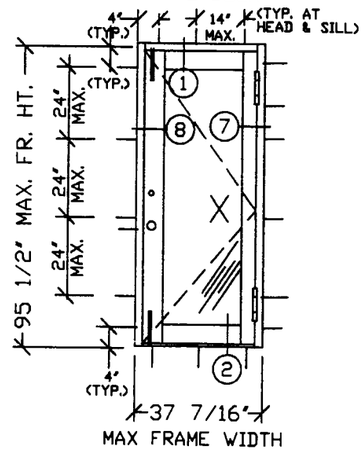

SINGLE DOOR W/SINGLE SIDELITE AT LOCK STILE.

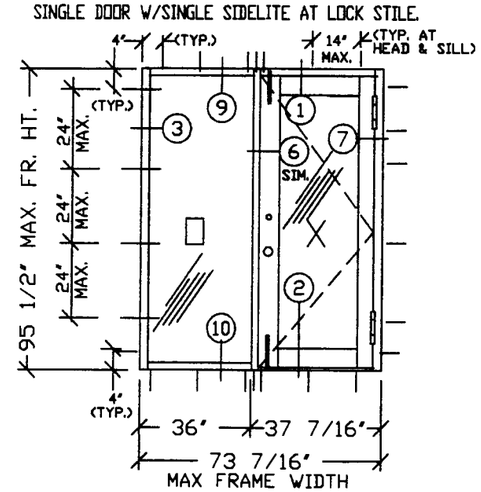

DOUBLE DOOR

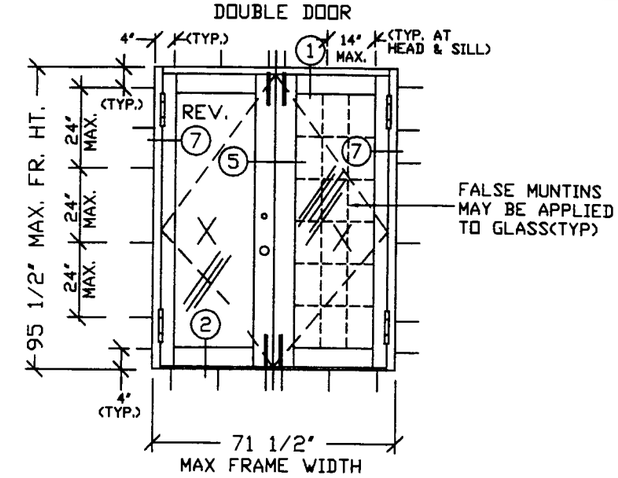

SINGLE DOOR W/ SIDELITE EACH SIDE

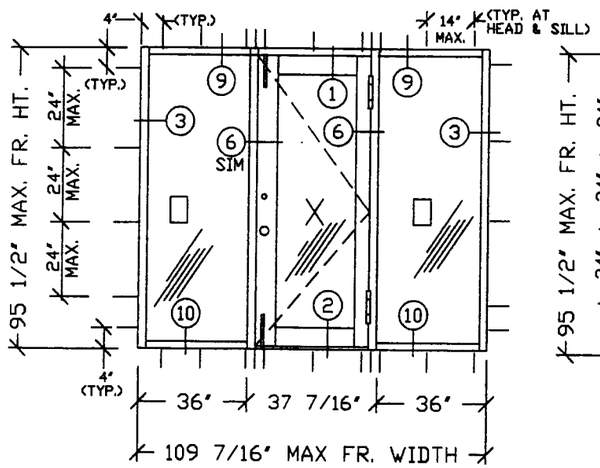

DOUBLE DOOR WITH SINGLE SIDELITE EACH SIDE

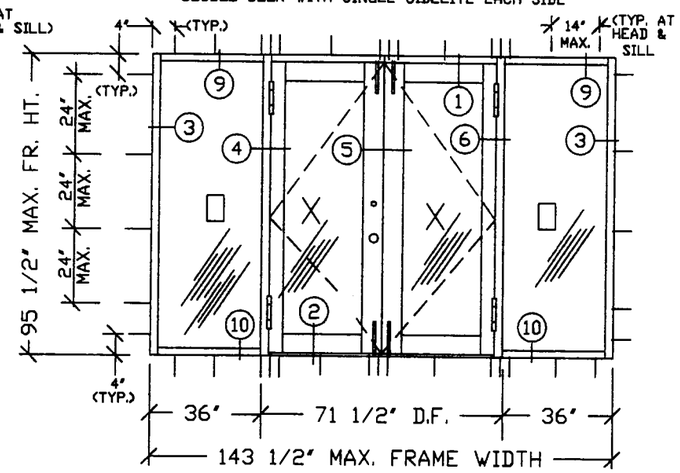

NOTES FOR ANCHORS INTO WOOD FRAME CONSTRUCTION

1. TYPICAL WOOD FRAME ANCHOR TYPE IS #14 STAINLESS STEEL SHEET METAL SCREW X 1 1/2" PENETRATION.
2. MINIMUM WOOD FRAME ANCHOR QUANTITIES ARE DEPICTED AS SOLID LINES LOCATED AROUND THE PERIMETER OF EA. UNIT ELEVATION, DRAWN PERPENDICULAR TO THE FRAME.
3. MAXIMUM SHIM SPACE BETWEEN FRENCH DOOR FRAME AND WOOD FRAME SUBSTRATE = 1/4".
4. LOCATE ALL MEETING STILE AND MULLION END ANCHORS WITHIN 6" FROM CENTERLINE, PER TEST MOCK-UP.
5. LOCATE INTERMEDIATE HEAD AND SILL ANCHORS AT 4" FROM FRAME ENDS & 14" O.C. MAX., PER TEST MOCK-UP. ADDITIONAL CLUSTERS OF THREE (3) ANCHORS ARE REQUIRED AT MEETING STILES OF DOUBLE DOORS AND MULLION JAMBS.
6. LOCATE INTERMEDIATE JAMB ANCHORS AT 4" FROM FRAME ENDS & 24" O.C. MAX., PER TEST MOCK-UP.
7. LOCATE ALL HINGE/LOCK-SET ANCHORS WITHIN 6" FROM THE HINGE/LOCKSET CENTERLINE, PER TEST MOCK-UP.
8. ELEVATIONS ARE SCALED VIEWS OF EQUIVALENT "TEST SIZE" UNITS FOR "X", "OX", "XX", "OXO", OR "OXXO" CONFIGURATIONS.
9. LOCATE HEAD, SILL, AND JAMB INTERMEDIATE ANCHORS FOR OTHER SIZE UNITS PER NOTES 5 AND 6.

NOTES FOR ANCHORS INTO STRUCTURAL CONCRETE/CBS CONSTRUCTION.

1. TYPICAL CONCRETE ANCHOR TYPE IS 1/4" DIA. TAPCON X 1 3/4" EMBEDMENT.
2. MINIMUM CONCRETE ANCHOR QUANTITIES ARE DEPICTED AS SOLID LINES LOCATED AROUND THE PERIMETER OF EACH UNIT ELEVATION, DRAWN PERPENDICULAR TO THE FRAME.
3. MAXIMUM SHIM SPACE BETWEEN THE FRENCH DOOR FRAME AND AND THE CONCRETE/WOOD BUCK SUBSTRATE = 1/4"
4. MINIMUM 1/4" DIA. TAPCON EDGE DISTANCE FROM EDGE OF CONCRETE/BLOCK = 2 1/2" (10 DIA.)
5. MINIMUM SPACING BETWEEN 1/4" DIA. TAPCONS WITHIN "ANCHOR GROUP" = 3" (12 DIA.)
6. MINIMUM 1/4" DIA. TAPCON EMBEDMENT FOR HOLLOW CONCRETE BLOCK = 1 1/2".
7. LOCATE ALL MEETING STILE AND MULLION END ANCHORS WITHIN 6" FROM CENTERLINE, PER TEST MOCK-UP.
8. LOCATE INTERMEDIATE HEAD AND SILL ANCHORS AT 4" FROM FRAME ENDS AND 14" ON CENTER MAXIMUM, PER TEST MOCK-UP. ADDITIONAL CLUSTERS OF THREE (3) ANCHORS ARE REQUIRED AT MEETING STILES OF DOUBLE DOORS AND MULLION JAMBS.
9. LOCATE INTERMEDIATE JAMB ANCHORS AT 4" FROM FRAME ENDS AND 24" ON CENTER MAXIMUM, PER TEST MOCK-UP.
10. LOCATE ALL HINGE/LOCKSET ANCHORS WITHIN 6" FROM HINGE/LOCKSET CENTERLINE, PER TEST MOCK-UP.
11. ELEVATIONS ARE SCALED VIEWS OF EQUIVALENT "TEST SIZE" UNITS FOR "X", "OX", "XX", "OXO", OR "OXXO" CONFIGURATIONS.
12. LOCATE HEAD, SILL, AND JAMB INTERMEDIATE ANCHORS FOR OTHER SIZE UNITS PER NOTES 8 AND 9.

FLUSH BOLT DETAIL

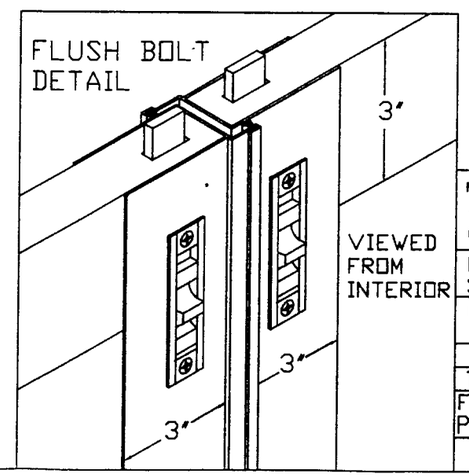

APPROVED AS COMPLYING WITH THE SOUTH FLORIDA BUILDING CODE
DATE June 29, 2000
BY Ishaq I. Chanda
PRODUCT CONTROL DIVISION
BUILDING CODE COMPLIANCE OFFICE
ACCEPTANCE NO. 99-0902.02

TM WINDOW & DOOR CO.
601 NW 12 AVE., POMPANO BEACH, FL

PRODUCT DESCRIPTION SERIES 230 FRENCH DOOR				
GLASS TYPE 3/16" TEMPERED GLASS				
TEST LAB: CERTIFIED TESTING LABORATORIES				
TEST REPORT NO: CTLA 136W - 5				
FILE NO. PA99230	CONFIG. SEE ELEV.	Sheet: 4 OF 9	Date: 10-21-99	Rev. 4-28-00

BALLARD L. ARGUS CERTIFICATE No. 35660 STATE OF FLORIDA REGISTERED ENGINEER

4/22/00

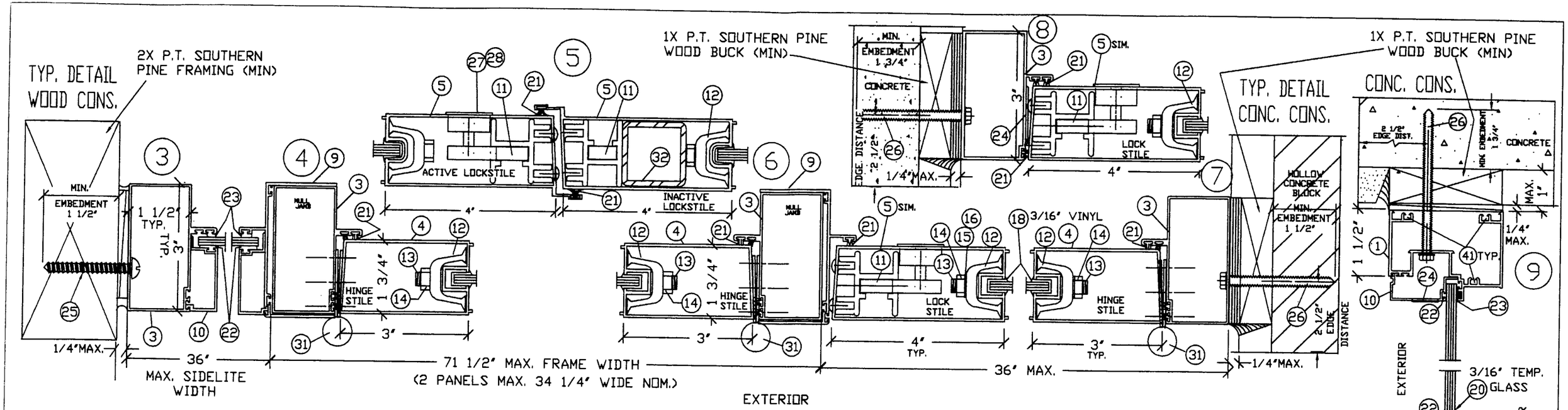

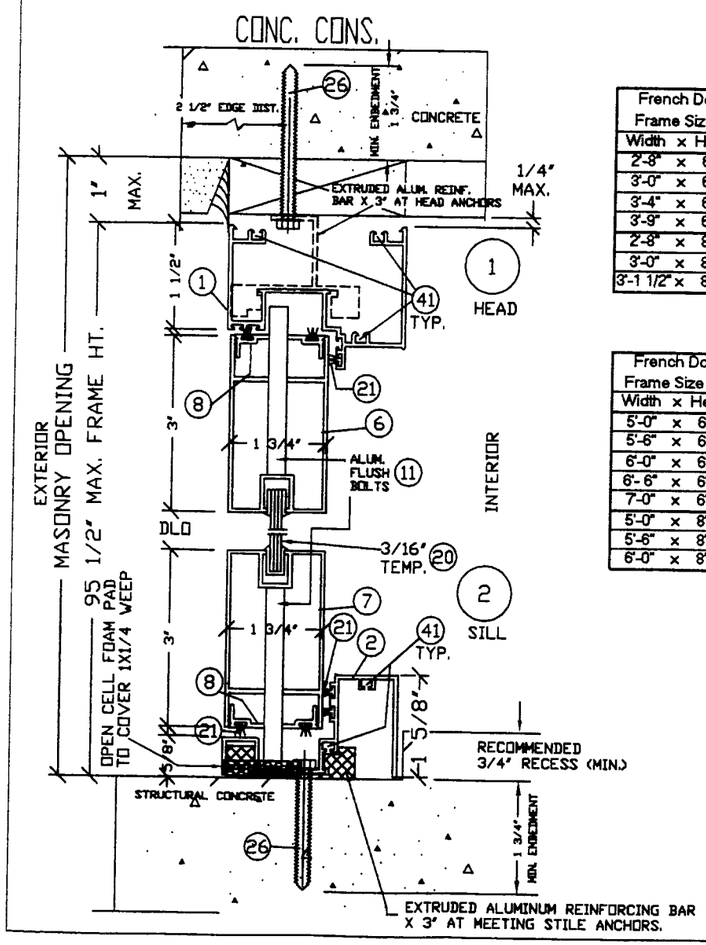

Comparative Analysis Tables of Allowable Design Pressures, for Product Sizes Indicated, for CTL Test No. CTLA 136W - 5 dated 12/4/96

Tabulated values are the Allowable Design Pressure Rating for Product Sizes and Configurations shown, psf.

French Door Frame Size X	Config = "X" 1 5/8" Sill	
Width × Height	+ Dp	- Dp
2'-8" × 6'-8"	53.3	-75.9
3'-0" × 6'-8"	53.3	-55.8
3'-4" × 6'-8"	53.3	-34.8
3'-9" × 6'-8"	53.3	N.A.
2'-8" × 8'-0"	53.3	-57.9
3'-0" × 8'-0"	53.3	-50.8
3'-1 1/2" × 8'-0"	53.3	-48.6

French Door With Sidelites Frame Size X	Configuration = "OXO"							
	12" S/L Width		18" S/L Width		24" S/L Width		36" S/L Width	
	1 5/8" Sill		1 5/8" Sill		1 5/8" Sill		1 5/8" Sill	
Width × Height	+ Dp	- Dp	+ Dp	- Dp	+ Dp	- Dp	+ Dp	- Dp
2'-8" × 6'-8"	53.3	-75.9	53.3	-69.5	53.3	-61.7	47.6	-51.2
3'-0" × 6'-8"	53.3	-55.8	53.3	-55.8	53.3	-55.8	45.3	-48.5
3'-4" × 6'-8"	53.3	-34.8	53.3	-34.8	50.9	-34.8	43.4	-34.8
3'-9" × 6'-8"	53.3	N.A.	53.2	N.A.	48.2	N.A.	41.4	N.A.
2'-8" × 8'-0"	41.5	-47.7	36.2	-41.2	32.3	-36.3	26.9	-29.7
3'-0" × 8'-0"	38.5	-44.0	33.9	-38.4	30.4	-34.1	25.6	-28.2
3'-1 1/2" × 8'-0"	37.6	-42.8	33.1	-37.4	29.8	-33.4	25.1	-27.7

French Door With Sidelites Frame Size X	Configuration = "XO" or "OX"							
	12" S/L Width		18" S/L Width		24" S/L Width		36" S/L Width	
	1 5/8" Sill		1 5/8" Sill		1 5/8" Sill		1 5/8" Sill	
Width × Height	+ Dp	- Dp	+ Dp	- Dp	+ Dp	- Dp	+ Dp	- Dp
2'-8" × 6'-8"	53.3	-75.9	53.3	-69.5	53.3	-61.7	47.6	-51.2
3'-0" × 6'-8"	53.3	-55.8	53.3	-55.8	53.3	-55.8	45.3	-48.5
3'-4" × 6'-8"	53.3	-34.8	53.3	-34.8	50.9	-34.8	43.4	-34.8
3'-9" × 6'-8"	53.3	N.A.	53.2	N.A.	48.2	N.A.	41.4	N.A.
2'-8" × 8'-0"	41.5	-47.7	36.2	-41.2	32.3	-36.3	26.9	-29.7
3'-0" × 8'-0"	38.5	-44.0	33.9	-38.4	30.4	-34.1	25.6	-28.2
3'-1 1/2" × 8'-0"	37.6	-42.8	33.1	-37.4	29.8	-33.4	25.1	-27.7

French Door Frame Size XX	Config = "XX" 1 5/8" Sill	
Width × Height	+ Dp	- Dp
5'-0" × 6'-8"	53.3	-72.2
5'-6" × 6'-8"	53.3	-62.0
6'-0" × 6'-8"	53.3	-48.2
6'- 6" × 6'-8"	53.3	-31.8
7'-0" × 6'-8"	53.3	-21.8
5'-0" × 8'-0"	53.3	-58.9
5'-6" × 8'-0"	53.3	-53.3
6'-0" × 8'-0"	53.3	-48.2

French Door With Sidelites Frame Size XX	Configuration = "OXXO"							
	12" S/L Width		18" S/L Width		24" S/L Width		36" S/L Width	
	1 5/8" Sill		1 5/8" Sill		1 5/8" Sill		1 5/8" Sill	
Width × Height	+ Dp	- Dp	+ Dp	- Dp	+ Dp	- Dp	+ Dp	- Dp
5'-0" × 6'-8"	53.3	-72.2	53.3	-72.2	53.3	-68.6	48.9	-55.9
5'-6" × 6'-8"	53.3	-62.0	53.3	-62.0	53.3	-62.0	47.0	-53.8
6'-0" × 6'-8"	53.3	-48.2	53.3	-48.2	53.3	-48.2	45.3	-48.2
6'- 6" × 6'-8"	53.3	-31.8	53.3	-31.8	51.5	-31.8	43.9	-31.8
7'-0" × 6'-8"	53.3	-21.8	53.3	-21.8	49.8	-21.8	42.6	-21.8
5'-0" × 8'-0"	43.2	-58.9	37.5	-49.5	33.3	-42.7	27.7	-33.9
5'-6" × 8'-0"	40.7	-53.3	35.6	-47.2	31.8	-40.9	26.6	-32.8
6'-0" × 8'-0"	38.5	-48.2	33.9	-45.1	30.4	-39.3	25.6	-31.7

French Door With Sidelites Frame Size XX	Configuration = "XXO"							
	12" S/L Width		18" S/L Width		24" S/L Width		36" S/L Width	
	1 5/8" Sill		1 5/8" Sill		1 5/8" Sill		1 5/8" Sill	
Width × Height	+ Dp	- Dp	+ Dp	- Dp	+ Dp	- Dp	+ Dp	- Dp
5'-0" × 6'-8"	53.3	-72.2	53.3	-72.2	53.3	-68.6	48.9	-55.9
5'-6" × 6'-8"	53.3	-62.0	53.3	-62.0	53.3	-62.0	47.0	-53.8
6'-0" × 6'-8"	53.3	-48.2	53.3	-48.2	53.3	-48.2	45.3	-48.2
6'- 6" × 6'-8"	53.3	-31.8	53.3	-31.8	51.5	-31.8	43.9	-31.8
7'-0" × 6'-8"	53.3	-21.8	53.3	-21.8	49.8	-21.8	42.6	-21.8
5'-0" × 8'-0"	43.2	-58.9	37.5	-49.5	33.3	-42.7	27.7	-33.9
5'-6" × 8'-0"	40.7	-53.3	35.6	-47.2	31.8	-40.9	26.6	-32.8
6'-0" × 8'-0"	38.5	-48.2	33.9	-45.1	30.4	-39.3	25.6	-31.7

APPROVED AS COMPLYING WITH THE SOUTH FLORIDA BUILDING CODE
DATE June 29, 2000
BY Ishaq I. Chanda
PRODUCT CONTROL DIVISION
BUILDING CODE COMPLIANCE OFFICE
ACCEPTANCE NO. 99-0902.02

TM WINDOW & DOOR CO.

601 NW 12 AVE., POMPANO BEACH, FL

PRODUCT DESCRIPTION
SERIES 230 FRENCH DOOR

GLASS TYPE
3/16" TEMPERED GLASS

TEST LAB: CERTIFIED TESTING LABORATORIES
TEST REPORT NO: CTLA 136W - 5

FILE NO.	CONFIG.	Sheet:	Date:	Rev.
PA99230	SEE ELEV.	5 OF 9	10-21-99	4-28-00

BALLARD L. ARGUS CERTIFICATE No. 35686 STATE OF FLORIDA REGISTERED ENGINEER

4/28/00

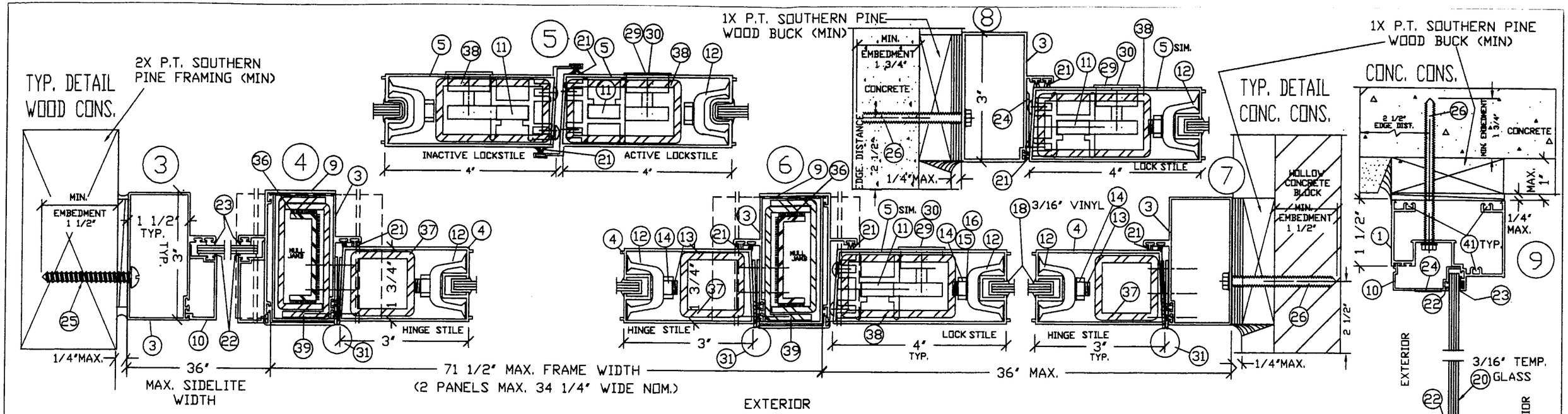

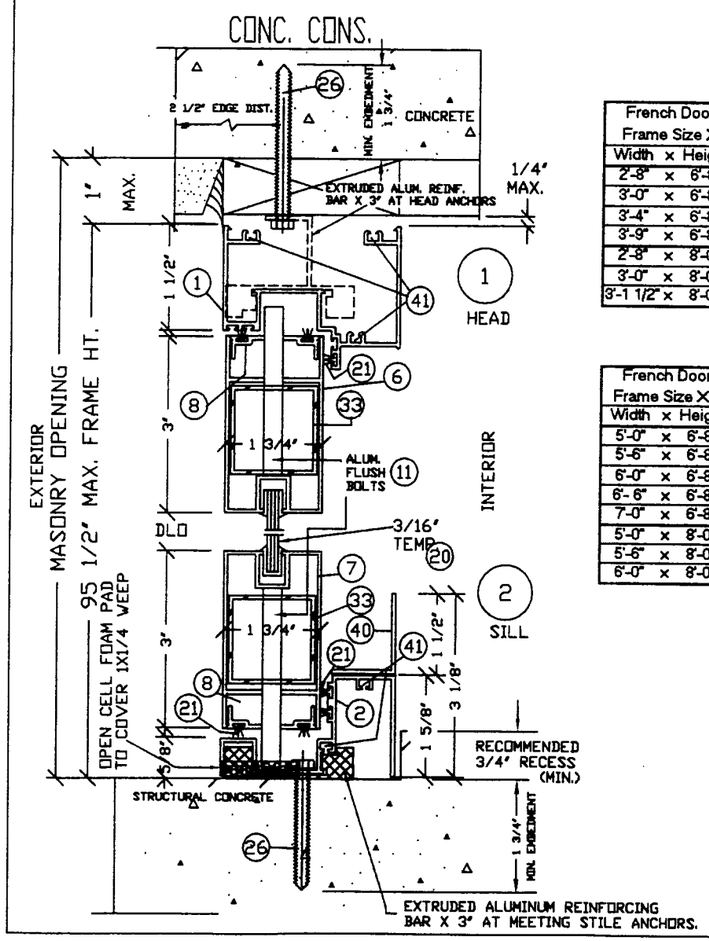

Comparative Analysis Tables of Allowable Design Pressures, for Product Sizes Indicated, for CTL Test No. CTLA 136W - 1,2,3 dated 12/9/96

Tabulated values are the Allowable Design Pressure Rating for Product Sizes and Configurations shown, psf.

French Door Frame Size X	Config = "X" 3 1/8" Sill	
Width x Height	+ Dp	- Dp
2'-8" x 6'-8"	80.0	-167.6
3'-0" x 6'-8"	80.0	-133.8
3'-4" x 6'-8"	80.0	-83.6
3'-9" x 6'-8"	80.0	-44.8
2'-8" x 8'-0"	80.0	-138.9
3'-0" x 8'-0"	80.0	-121.9
3'-1 1/2" x 8'-0"	80.0	-116.5

French Door Frame Size XX	Config = "XX" 3 1/8" Sill	
Width x Height	+ Dp	- Dp
5'-0" x 6'-8"	80.0	-170.7
5'-6" x 6'-8"	80.0	-148.7
6'-0" x 6'-8"	80.0	-115.7
6'- 6" x 6'-8"	80.0	-76.2
7'-0" x 6'-8"	80.0	-52.3
5'-0" x 8'-0"	80.0	-141.7
5'-6" x 8'-0"	80.0	-128.1
6'-0" x 8'-0"	80.0	-115.7

French Door With Sidelites Frame Size X	Configuration = "OXO" 12" S/L Width 3 1/8" Sill		18" S/L Width 3 1/8" Sill		24" S/L Width 3 1/8" Sill		36" S/L Width 3 1/8" Sill	
Width x Height	+ Dp	- Dp	+ Dp	- Dp	+ Dp	- Dp	+ Dp	- Dp
2'-8" x 6'-8"	80.0	-167.6	80.0	-167.6	80.0	-167.6	80.0	-120.0
3'-0" x 6'-8"	80.0	-133.8	80.0	-133.8	80.0	-133.8	80.0	-120.0
3'-4" x 6'-8"	80.0	-83.6	80.0	-83.6	80.0	-83.6	80.0	-83.6
3'-9" x 6'-8"	80.0	-44.8	80.0	-44.8	80.0	-44.8	80.0	-44.8
2'-8" x 8'-0"	80.0	-138.9	80.0	-129.3	80.0	-116.2	80.0	-97.6
3'-0" x 8'-0"	80.0	-121.9	80.0	-119.7	80.0	-108.3	80.0	-92.0
3'-1 1/2" x 8'-0"	80.0	-116.5	80.0	-116.4	80.0	-105.6	80.0	-90.1

French Door With Sidelites Frame Size XX	Configuration = "OXXO" 12" S/L Width 3 1/8" Sill		18" S/L Width 3 1/8" Sill		24" S/L Width 3 1/8" Sill		36" S/L Width 3 1/8" Sill	
Width x Height	+ Dp	- Dp	+ Dp	- Dp	+ Dp	- Dp	+ Dp	- Dp
5'-0" x 6'-8"	80.0	-170.7	80.0	-170.7	80.0	-170.7	80.0	-120.0
5'-6" x 6'-8"	80.0	-148.7	80.0	-148.7	80.0	-148.7	80.0	-120.0
6'-0" x 6'-8"	80.0	-115.7	80.0	-115.7	80.0	-115.7	80.0	-115.7
6'- 6" x 6'-8"	80.0	-76.2	80.0	-76.2	80.0	-76.2	80.0	-76.2
7'-0" x 6'-8"	80.0	-52.3	80.0	-52.3	80.0	-52.3	80.0	-52.3
5'-0" x 8'-0"	80.0	-141.7	80.0	-134.7	80.0	-120.5	80.0	-100.7
5'-6" x 8'-0"	80.0	-128.1	80.0	-126.7	80.0	-114.1	80.0	-96.1
6'-0" x 8'-0"	80.0	-115.7	80.0	-115.7	80.0	-108.3	80.0	-92.0

French Door With Sidelites Frame Size X	Configuration = "XO" or "OX" 12" S/L Width 3 1/8" Sill		18" S/L Width 3 1/8" Sill		24" S/L Width 3 1/8" Sill		36" S/L Width 3 1/8" Sill	
Width x Height	+ Dp	- Dp	+ Dp	- Dp	+ Dp	- Dp	+ Dp	- Dp
2'-8" x 6'-8"	80.0	-167.6	80.0	-167.6	80.0	-167.6	80.0	-120.0
3'-0" x 6'-8"	80.0	-133.8	80.0	-133.8	80.0	-133.8	80.0	-120.0
3'-4" x 6'-8"	80.0	-83.6	80.0	-83.6	80.0	-83.6	80.0	-83.6
3'-9" x 6'-8"	80.0	-44.8	80.0	-44.8	80.0	-44.8	80.0	-44.8
2'-8" x 8'-0"	80.0	-138.9	80.0	-129.3	80.0	-116.2	80.0	-97.6
3'-0" x 8'-0"	80.0	-121.9	80.0	-119.7	80.0	-108.3	80.0	-92.0
3'-1 1/2" x 8'-0"	80.0	-116.5	80.0	-116.4	80.0	-105.6	80.0	-90.1

French Door With Sidelites Frame Size XX	Configuration = "XXO" 12" S/L Width 3 1/8" Sill		18" S/L Width 3 1/8" Sill		24" S/L Width 3 1/8" Sill		36" S/L Width 3 1/8" Sill	
Width x Height	+ Dp	- Dp	+ Dp	- Dp	+ Dp	- Dp	+ Dp	- Dp
5'-0" x 6'-8"	80.0	-170.7	80.0	-170.7	80.0	-170.7	80.0	-120.0
5'-6" x 6'-8"	80.0	-148.7	80.0	-148.7	80.0	-148.7	80.0	-120.0
6'-0" x 6'-8"	80.0	-115.7	80.0	-115.7	80.0	-115.7	80.0	-115.7
6'- 6" x 6'-8"	80.0	-76.2	80.0	-76.2	80.0	-76.2	80.0	-76.2
7'-0" x 6'-8"	80.0	-52.3	80.0	-52.3	80.0	-52.3	80.0	-52.3
5'-0" x 8'-0"	80.0	-141.7	80.0	-134.7	80.0	-120.5	80.0	-100.7
5'-6" x 8'-0"	80.0	-128.1	80.0	-126.7	80.0	-114.1	80.0	-96.1
6'-0" x 8'-0"	80.0	-115.7	80.0	-115.7	80.0	-108.3	80.0	-92.0

APPROVED AS COMPLYING WITH THE SOUTH FLORIDA BUILDING CODE
DATE June 29, 2000
BY Ishaq I. Chanda
PRODUCT CONTROL DIVISION
BUILDING CODE COMPLIANCE OFFICE
ACCEPTANCE NO. 99-0902.02

TM WINDOW & DOOR CO.
601 NW 12 AVE., POMPANO BEACH, FL

PRODUCT DESCRIPTION
SERIES 230 FRENCH DOOR (REINFORCED)
GLASS TYPE
3/16" TEMPERED GLASS
TEST LAB: CERTIFIED TESTING LABORATORIES
TEST REPORT NO: CTLA 136W - 1,2,3.

FILE NO.	CONFIG.	Sheet:	Date:	Rev.
PA99230	SEE ELEV.	9 OF 9	10-21-99	4-28-00

BALLARD L. ARGOS CERTIFICATE No. 35566 REGISTERED ENGINEER

4/28/00

SINGLE SIDELITE WITH DOUBLE DOOR & SINGLE DOOR

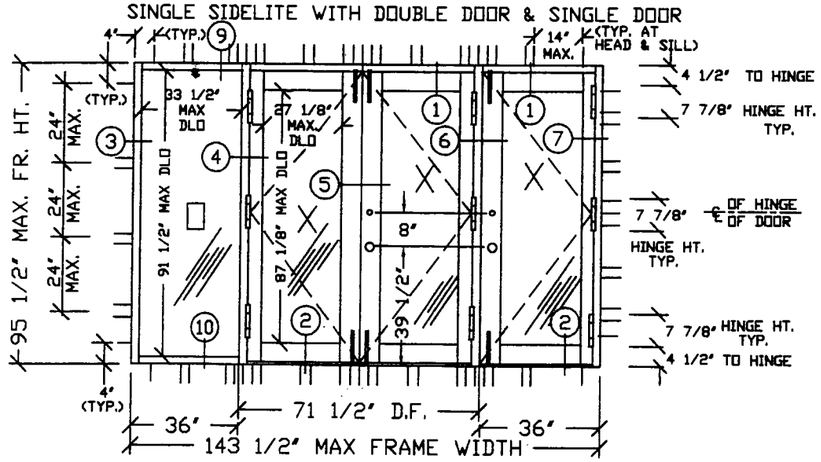

SINGLE DOOR

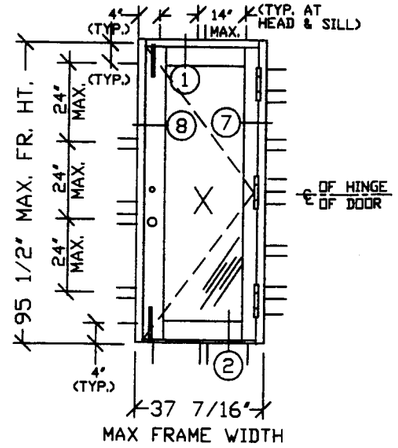

SINGLE DOOR W/SINGLE SIDELITE AT LOCK STILE.

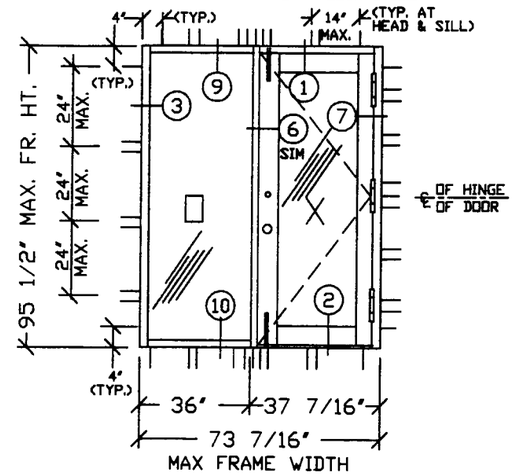

DOUBLE DOOR

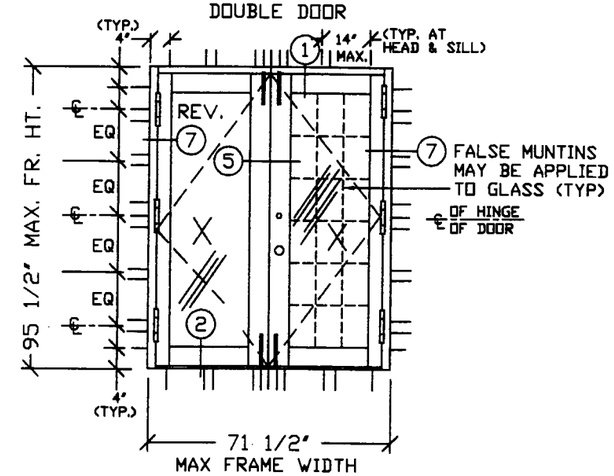

SINGLE DOOR W/ SIDELITE EACH SIDE

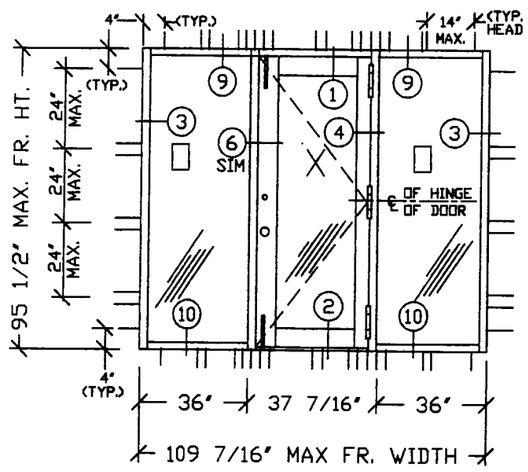

DOUBLE DOOR WITH SINGLE SIDELITE EACH SIDE

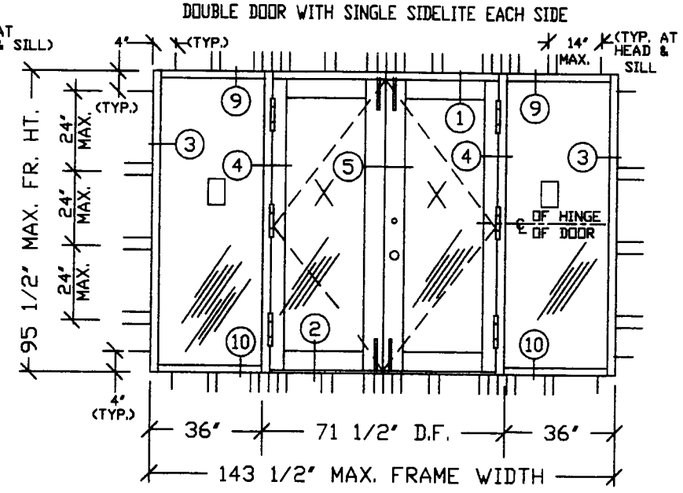

NOTES FOR ANCHORS INTO WOOD FRAME CONSTRUCTION

1. TYPICAL WOOD FRAME ANCHOR TYPE IS #14 STAINLESS STEEL SHEET METAL SCREW X 1 1/2" PENETRATION.
2. MINIMUM WOOD FRAME ANCHOR QUANTITIES ARE DEPICTED AS SOLID LINES LOCATED AROUND THE PERIMETER OF EA. UNIT ELEVATION, DRAWN PERPENDICULAR TO THE FRAME.
3. MAXIMUM SHIM SPACE BETWEEN FRENCH DOOR FRAME AND WOOD FRAME SUBSTRATE = 1/4".
4. LOCATE ALL MEETING STILE AND MULLION END ANCHORS WITHIN 6" FROM CENTERLINE, PER TEST MOCK-UP.
5. LOCATE INTERMEDIATE HEAD AND SILL ANCHORS AT 4" FROM FRAME ENDS AND 14" ON CENTER MAXIMUM, PER TEST MOCK-UP. ADDITIONAL CLUSTERS OF FIVE (5) ANCHORS ARE REQUIRED AT MEETING STILES OF DOUBLE DOORS AND MULLION JAMBS. ADDITIONAL CLUSTERS OF TWO (2) ANCHORS ARE REQUIRED AT MID-PANEL.
6. LOCATE INTERMEDIATE JAMB ANCHORS AT 4" FROM FRAME ENDS & 24" O.C. MAX., PER TEST MOCK-UP.
7. LOCATE ALL HINGE/LOCK-SET ANCHORS WITHIN 6" FROM THE HINGE/LOCKSET CENTERLINE, PER TEST MOCK-UP.
8. ELEVATIONS ARE SCALED VIEWS OF EQUIVALENT 'TEST SIZE' UNITS FOR 'X', 'OX', 'XX', 'OXO', OR 'OXXO' CONFIGURATIONS.
9. LOCATE HEAD, SILL, AND JAMB INTERMEDIATE ANCHORS FOR OTHER SIZE UNITS PER NOTES 5 AND 6.

NOTES FOR ANCHORS INTO STRUCTURAL CONCRETE/CBS CONSTRUCTION.

1. TYPICAL CONCRETE ANCHOR TYPE IS 1/4" DIA. TAPCON X 1 3/4" EMBEDMENT.
2. MINIMUM CONCRETE ANCHOR QUANTITIES ARE DEPICTED AS SOLID LINES LOCATED AROUND THE PERIMETER OF EACH UNIT ELEVATION, DRAWN PERPENDICULAR TO THE FRAME.
3. MAXIMUM SHIM SPACE BETWEEN THE FRENCH DOOR FRAME AND AND THE CONCRETE/WOOD BUCK SUBSTRATE = 1/4"
4. MINIMUM 1/4" DIA. TAPCON EDGE DISTANCE FROM EDGE OF CONCRETE/BLOCK = 2 1/2" (10 DIA.)
5. MINIMUM SPACING BETWEEN 1/4" DIA. TAPCONS WITHIN 'ANCHOR GROUP' = 3" (12 DIA.)
6. MINIMUM 1/4" DIA. TAPCON EMBEDMENT FOR HOLLOW CONCRETE BLOCK = 1 1/2".
7. LOCATE ALL MEETING STILE AND MULLION END ANCHORS WITHIN 6" FROM CENTERLINE, PER TEST MOCK-UP.
8. LOCATE INTERMEDIATE HEAD AND SILL ANCHORS AT 4" FROM FRAME ENDS AND 14" ON CENTER MAXIMUM, PER TEST MOCK-UP. ADDITIONAL CLUSTERS OF FIVE (5) ANCHORS ARE REQUIRED AT MEETING STILES OF DOUBLE DOORS AND MULLION JAMBS. ADDITIONAL CLUSTERS OF TWO (2) ANCHORS ARE REQUIRED AT MID-PANEL.
9. LOCATE INTERMEDIATE JAMB ANCHORS AT 4" FROM FRAME ENDS AND 24" ON CENTER MAXIMUM, PER TEST MOCK-UP.
10. LOCATE ALL HINGE/LOCKSET ANCHORS WITHIN 6" FROM HINGE/LOCKSET CENTERLINE, PER TEST MOCK-UP.
11. ELEVATIONS ARE SCALED VIEWS OF EQUIVALENT 'TEST SIZE' UNITS FOR 'X', 'OX', 'XX', 'OXO', OR 'OXXO' CONFIGURATIONS.
12. LOCATE HEAD, SILL, AND JAMB INTERMEDIATE ANCHORS FOR OTHER SIZE UNITS PER NOTES 8 AND 9.

FLUSH BOLT DETAIL

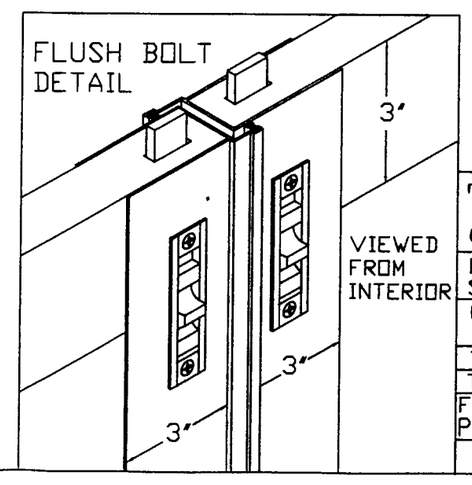

B

APPROVED AS COMPLYING WITH THE SOUTH FLORIDA BUILDING CODE
DATE June 29, 2000
BY Ishaq I. Chanda
PRODUCT CONTROL DIVISION
BUILDING CODE COMPLIANCE OFFICE
ACCEPTANCE NO. 99-0902.02

TM WINDOW & DOOR CO.
601 NW 12 AVE., POMPANO BEACH, FL

PRODUCT DESCRIPTION
SERIES 230 FRENCH DOOR

GLASS TYPE
3/16" TEMPERED GLASS

TEST LAB: CERTIFIED TESTING LABORATORIES
TEST REPORT NO: CTLA 136W - 4

FILE NO.	CONFIG.	Sheet:	Date:	Rev.
PA99230	SEE ELEV.	6 OF 9	10-21-99	4-28-00

BALLARD & ARGUS CERTIFICATE No. 35686 REGISTERED ENGINEER FLORIDA

4/28/00

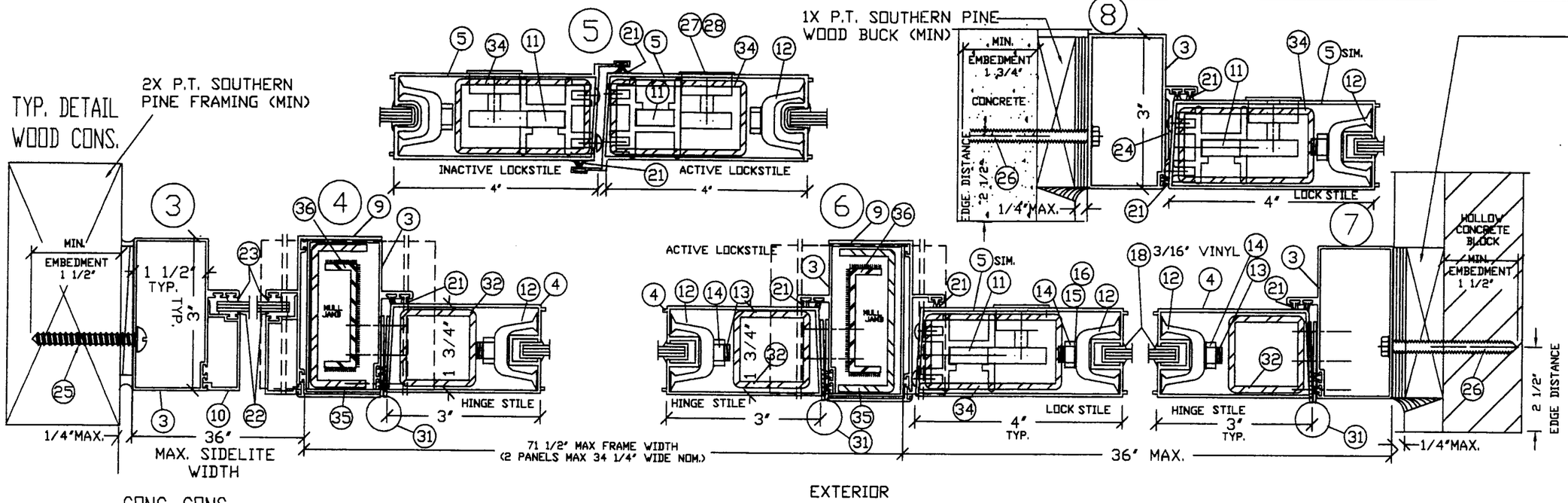

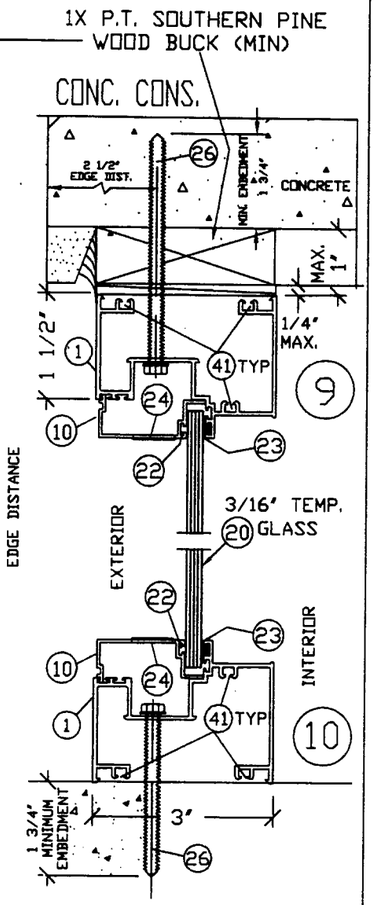

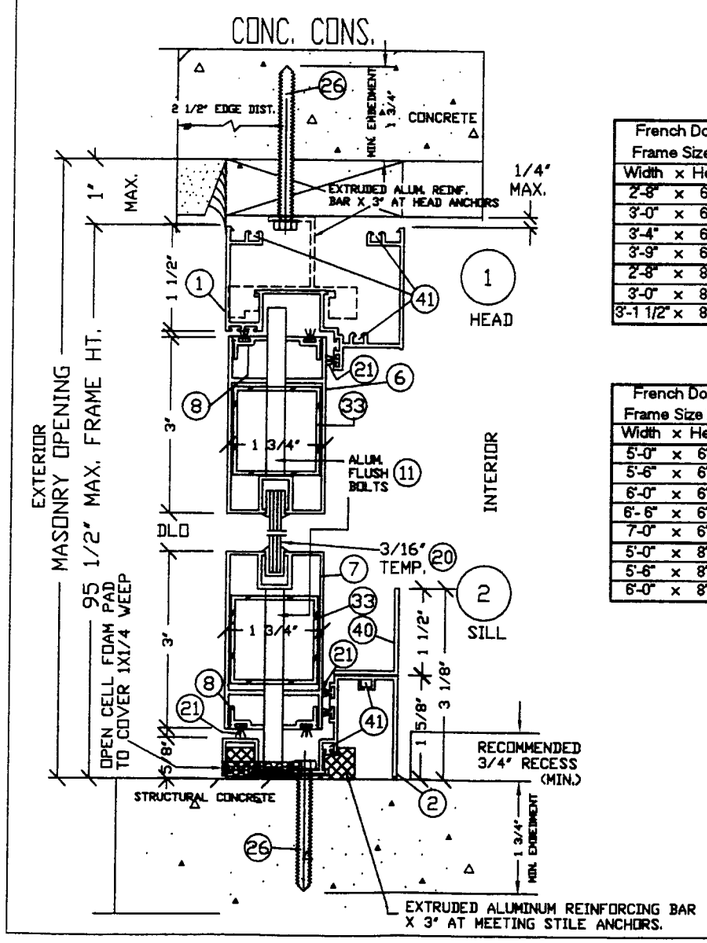

Comparative Analysis Tables of Allowable Design Pressures, for Product Sizes Indicated, for CTL Test No. CTLA 136W - 4 dated 12/7/96

Tabulated values are the Allowable Design Pressure Rating for Product Sizes and Configurations shown, psf.

French Door Frame Size X	Config = "X" 3 1/8" Sill	
Width x Height	+ Dp	- Dp
2'-8" x 6'-8"	80.0	-126.0
3'-0" x 6'-8"	80.0	-110.5
3'-4" x 6'-8"	80.0	-83.6
3'-9" x 6'-8"	80.0	-44.8
2'-8" x 8'-0"	80.0	-98.4
3'-0" x 8'-0"	80.0	-86.3
3'-1 1/2" x 8'-0"	80.0	-82.5

French Door Frame Size XX	Config = "XX" 3 1/8" Sill	
Width x Height	+ Dp	- Dp
5'-0" x 6'-8"	80.0	-122.7
5'-6" x 6'-8"	80.0	-110.9
6'-0" x 6'-8"	80.0	-101.2
6'-6" x 6'-8"	80.0	-76.2
7'-0" x 6'-8"	80.0	-52.3
5'-0" x 8'-0"	80.0	-100.3
5'-6" x 8'-0"	80.0	-90.7
6'-0" x 8'-0"	78.2	-82.8

French Door With Sidelites Frame Size X	Configuration = "OXO" 12" S/L Width 3 1/8" Sill		18" S/L Width 3 1/8" Sill		24" S/L Width 3 1/8" Sill		36" S/L Width 3 1/8" Sill	
Width x Height	+ Dp	- Dp	+ Dp	- Dp	+ Dp	- Dp	+ Dp	- Dp
2'-8" x 6'-8"	80.0	-126.0	80.0	-126.0	80.0	-125.3	80.0	-103.8
3'-0" x 6'-8"	80.0	-110.5	80.0	-110.5	80.0	-110.5	80.0	-99.3
3'-4" x 6'-8"	80.0	-83.6	80.0	-83.6	80.0	-83.6	80.0	-83.6
3'-9" x 6'-8"	80.0	-44.8	80.0	-44.8	80.0	-44.8	80.0	-44.8
2'-8" x 8'-0"	80.0	-98.4	80.0	-89.8	80.0	-80.7	69.6	-67.8
3'-0" x 8'-0"	80.0	-86.3	80.0	-83.1	78.5	-75.2	66.1	-63.9
3'-1 1/2" x 8'-0"	80.0	-82.5	80.0	-80.9	76.9	-73.4	64.9	-62.6

French Door With Sidelites Frame Size XX	Configuration = "OXXO" 12" S/L Width 3 1/8" Sill		18" S/L Width 3 1/8" Sill		24" S/L Width 3 1/8" Sill		36" S/L Width 3 1/8" Sill	
Width x Height	+ Dp	- Dp	+ Dp	- Dp	+ Dp	- Dp	+ Dp	- Dp
5'-0" x 6'-8"	80.0	-122.7	80.0	-122.7	80.0	-122.7	80.0	-113.8
5'-6" x 6'-8"	80.0	-110.9	80.0	-110.9	80.0	-110.9	80.0	-108.2
6'-0" x 6'-8"	80.0	-101.2	80.0	-101.2	80.0	-101.2	80.0	-101.2
6'-6" x 6'-8"	80.0	-76.2	80.0	-76.2	80.0	-76.2	80.0	-76.2
7'-0" x 6'-8"	80.0	-52.3	80.0	-52.3	80.0	-52.3	80.0	-52.3
5'-0" x 8'-0"	80.0	-100.3	80.0	-93.6	80.0	-83.7	71.5	-69.9
5'-6" x 8'-0"	80.0	-90.7	80.0	-88.0	80.0	-79.3	68.7	-66.8
6'-0" x 8'-0"	78.2	-82.8	78.2	-82.8	78.2	-75.2	66.1	-63.9

French Door With Sidelites Frame Size X	Configuration = "XO" or "OX" 12" S/L Width 3 1/8" Sill		18" S/L Width 3 1/8" Sill		24" S/L Width 3 1/8" Sill		36" S/L Width 3 1/8" Sill	
Width x Height	+ Dp	- Dp	+ Dp	- Dp	+ Dp	- Dp	+ Dp	- Dp
2'-8" x 6'-8"	80.0	-126.0	80.0	-126.0	80.0	-125.3	80.0	-103.8
3'-0" x 6'-8"	80.0	-110.5	80.0	-110.5	80.0	-110.5	80.0	-99.3
3'-4" x 6'-8"	80.0	-83.6	80.0	-83.6	80.0	-83.6	80.0	-83.6
3'-9" x 6'-8"	80.0	-44.8	80.0	-44.8	80.0	-44.8	80.0	-44.8
2'-8" x 8'-0"	80.0	-98.4	80.0	-89.8	80.0	-80.7	69.6	-67.8
3'-0" x 8'-0"	80.0	-86.3	80.0	-83.1	78.5	-75.2	66.1	-63.9
3'-1 1/2" x 8'-0"	80.0	-82.5	80.0	-80.9	76.9	-73.4	64.9	-62.6

French Door With Sidelites Frame Size XX	Configuration = "XXO" 12" S/L Width 3 1/8" Sill		18" S/L Width 3 1/8" Sill		24" S/L Width 3 1/8" Sill		36" S/L Width 3 1/8" Sill	
Width x Height	+ Dp	- Dp	+ Dp	- Dp	+ Dp	- Dp	+ Dp	- Dp
5'-0" x 6'-8"	80.0	-122.7	80.0	-122.7	80.0	-122.7	80.0	-113.8
5'-6" x 6'-8"	80.0	-110.9	80.0	-110.9	80.0	-110.9	80.0	-108.2
6'-0" x 6'-8"	80.0	-101.2	80.0	-101.2	80.0	-101.2	80.0	-101.2
6'-6" x 6'-8"	80.0	-76.2	80.0	-76.2	80.0	-76.2	80.0	-76.2
7'-0" x 6'-8"	80.0	-52.3	80.0	-52.3	80.0	-52.3	80.0	-52.3
5'-0" x 8'-0"	80.0	-100.3	80.0	-93.6	80.0	-83.7	71.5	-69.9
5'-6" x 8'-0"	80.0	-90.7	80.0	-88.0	80.0	-79.3	68.7	-66.8
6'-0" x 8'-0"	78.2	-82.8	78.2	-82.8	78.2	-75.2	66.1	-63.9

APPROVED AS COMPLYING WITH THE
SOUTH FLORIDA BUILDING CODE
DATE June 29, 2000
BY Ishaq I. Chanda
PRODUCT CONTROL DIVISION
BUILDING CODE COMPLIANCE OFFICE
ACCEPTANCE NO. 99-0902.02

TM WINDOW & DOOR CO.
601 NW 12 AVE., POMPANO BEACH, FL

PRODUCT DESCRIPTION
SERIES 230 FRENCH DOOR

GLASS TYPE
3/16" TEMPERED GLASS

TEST LAB: CERTIFIED TESTING LABORATORIES

TEST REPORT NO: CTLA 136W - 4

FILE NO.	CONFIG.	Sheet:	Date:	Rev.
PA99230	SEE ELEV.	7 OF 9	10-21-99	4-28-00

B

BALLARD L. ANGUS
CERTIFICATE
No. 35686
STATE OF FLORIDA
REGISTERED ENGINEER

4/28/00

SINGLE SIDELITE WITH DOUBLE DOOR & SINGLE DOOR

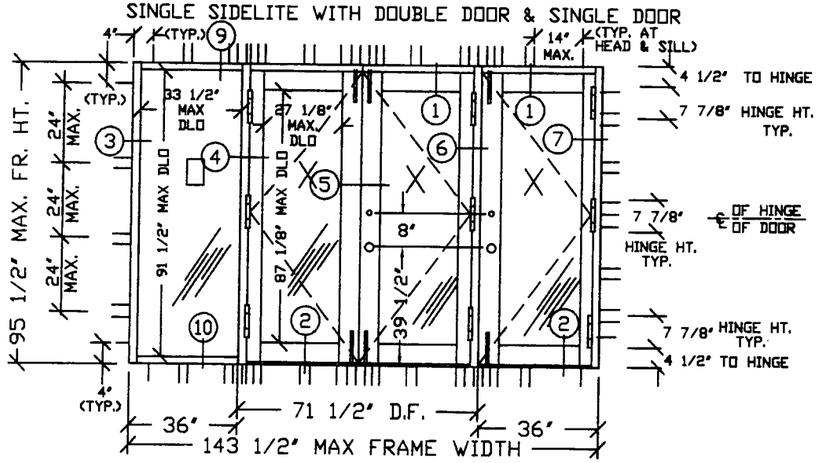

SINGLE DOOR

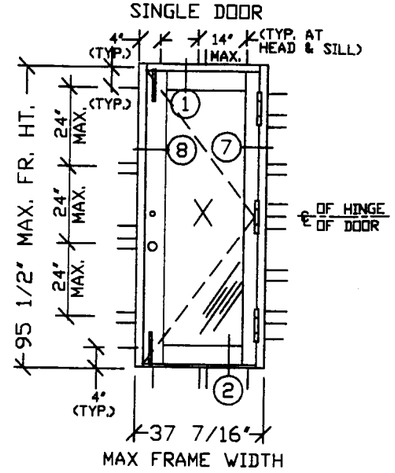

SINGLE DOOR W/SINGLE SIDELITE AT LOCK STILE

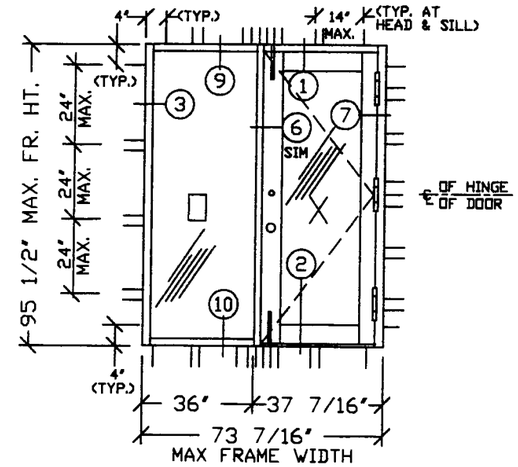

DOUBLE DOOR

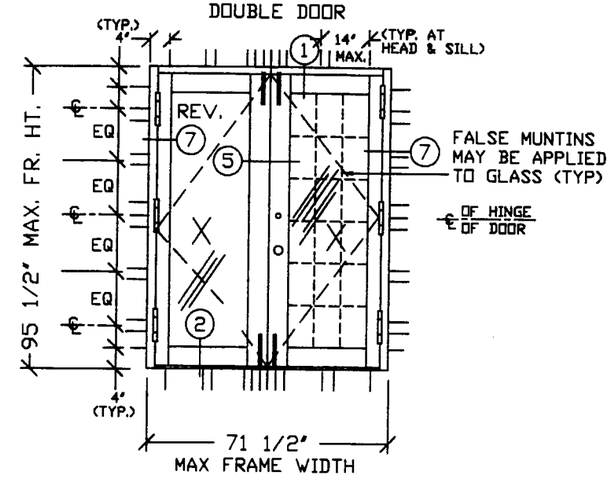

SINGLE DOOR W/ SIDELITE EACH SIDE

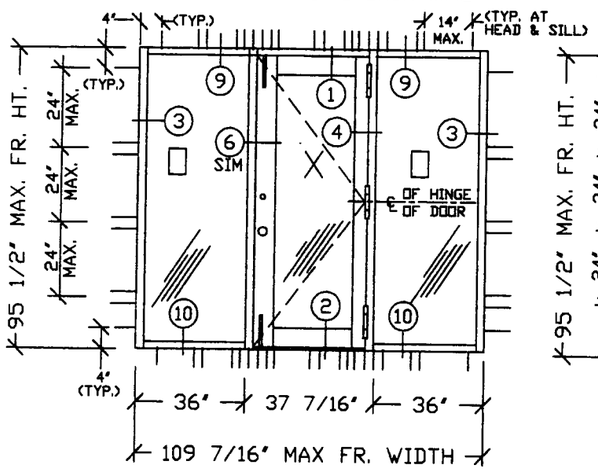

DOUBLE DOOR WITH SINGLE SIDELITE EACH SIDE

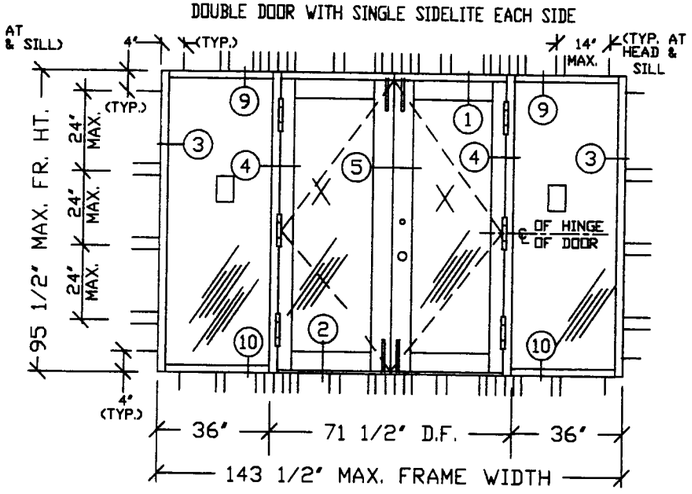

NOTES FOR ANCHORS INTO WOOD FRAME CONSTRUCTION

1. TYPICAL WOOD FRAME ANCHOR TYPE IS #14 STAINLESS STEEL SHEET METAL SCREW X 1 1/2" PENETRATION.
2. MINIMUM WOOD FRAME ANCHOR QUANTITIES ARE DEPICTED AS SOLID LINES LOCATED AROUND THE PERIMETER OF EA. UNIT ELEVATION, DRAWN PERPENDICULAR TO THE FRAME.
3. MAXIMUM SHIM SPACE BETWEEN FRENCH DOOR FRAME AND WOOD FRAME SUBSTRATE = 1/4".
4. LOCATE ALL MEETING STILE AND MULLION END ANCHORS WITHIN 6" FROM CENTERLINE, PER TEST MOCK-UP.
5. LOCATE INTERMEDIATE HEAD AND SILL ANCHORS AT 4" FROM FRAME ENDS & 14" O.C. MAX., PER TEST MOCK-UP. ADDITIONAL CLUSTERS OF SIX (6) ANCHORS ARE REQUIRED AT MEETING STILES OF DOUBLE DOORS AND MULLION JAMBS. ADDITIONAL CLUSTERS OF TWO (2) ANCHORS ARE REQUIRED AT MID-PANEL.
6. LOCATE INTERMEDIATE JAMB ANCHORS AT 4" FROM FRAME ENDS AND CLUSTERS OF TWO (2) ANCHORS 24" ON CENTER MAX., PER TEST MOCK-UP.
7. LOCATE ALL HINGE/LOCK-SET ANCHORS WITHIN 6" FROM HINGE/LOCKSET CENTERLINE, PER TEST MOCK-UP.
8. ELEVATIONS ARE SCALED VIEWS OF EQUIVALENT "TEST SIZE" UNITS FOR "X", "OX", "XX", "OXO", OR "OXXO" CONFIGURATIONS.
9. LOCATE HEAD, SILL, AND JAMB INTERMEDIATE ANCHORS FOR OTHER SIZE UNITS PER NOTES 5 AND 6.

NOTES FOR ANCHORS INTO STRUCTURAL CONCRETE/CBS CONSTRUCTION.

1. TYPICAL CONCRETE ANCHOR TYPE IS 1/4" DIA. TAPCON X 1 3/4" EMBEDMENT.
2. MINIMUM CONCRETE ANCHOR QUANTITIES ARE DEPICTED AS SOLID LINES LOCATED AROUND THE PERIMETER OF EACH UNIT ELEVATION, DRAWN PERPENDICULAR TO THE FRAME.
3. MAXIMUM SHIM SPACE BETWEEN THE FRENCH DOOR FRAME AND THE CONCRETE/WOOD BUCK SUBSTRATE = 1/4"
4. MINIMUM 1/4" DIA. TAPCON EDGE DISTANCE FROM EDGE OF CONCRETE/BLOCK = 2 1/2" (10 DIA.)
5. MINIMUM SPACING BETWEEN 1/4" DIA. TAPCONS WITHIN "ANCHOR GROUP" = 3" (12 DIA.), EXCEPT AS INDICATED IN NOTE NUMBER 7 BELOW.
6. MINIMUM 1/4" DIA. TAPCON EMBEDMENT FOR HOLLOW CONCRETE BLOCK = 1 1/2".
7. LOCATE ALL MEETING STILE AND MULLION END ANCHORS WITHIN 6" FROM CENTERLINES, AND 2 3/8" ON CENTER MINIMUM, PER TEST MOCK-UP.
8. LOCATE INTERMEDIATE HEAD AND SILL ANCHORS AT 4" FROM FRAME ENDS AND 14" ON CENTER MAX. PER TEST MOCK-UP. ADDITIONAL CLUSTERS OF SIX (6) ANCHORS ARE REQUIRED AT MEETING STILES OF DOUBLE DOORS AND MULLION JAMBS. ADDITIONAL CLUSTERS OF TWO (2) ANCHORS ARE REQUIRED AT MID-PANEL.
9. LOCATE INTERMEDIATE JAMB ANCHORS AT 4" FROM FRAME ENDS AND CLUSTERS OF TWO (2) ANCHORS 24" ON CENTER MAX., PER TEST MOCK-UP.
10. LOCATE ALL HINGE/LOCK-SET ANCHORS WITHIN 6" FROM HINGE/LOCKSET CENTERLINE, PER TEST MOCK-UP.
11. ELEVATIONS ARE SCALED VIEWS OF EQUIVALENT "TEST SIZE" UNITS FOR "X", "OX", "XX", "OXO", OR "OXXO" CONFIGURATIONS.
12. LOCATE HEAD, SILL, AND JAMB INTERMEDIATE ANCHORS FOR OTHER SIZE UNITS PER NOTES 8 AND 9.

FLUSH BOLT DETAIL

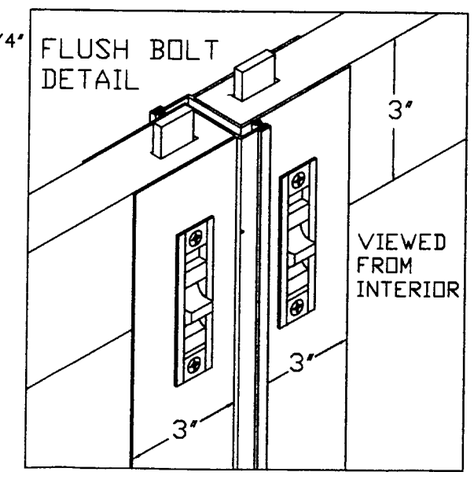

C

APPROVED AS COMPLYING WITH THE SOUTH FLORIDA BUILDING CODE
DATE June 29, 2000
BY Ishaq I. Chanda
PRODUCT CONTROL DIVISION
BUILDING CODE COMPLIANCE OFFICE
ACCEPTANCE NO. 99-0902.02

TM WINDOW & DOOR CO.
601 NW 12 AVE., POMPANO BEACH, FL

PRODUCT DESCRIPTION
SERIES 230 FRENCH DOOR

GLASS TYPE
3/16" TEMPERED GLASS

TEST LAB: CERTIFIED TESTING LABORATORIES

TEST REPORT NO: CTLA 136W - 1,2,3.

FILE NO.	CONFIG.	Sheet:	Date:	Rev.
PA99230	SEE ELEV.	8 OF 9	10-21-99	4-28-00

BALLARD L. ARBUS CERTIFICATE No. 35606 STATE OF FLORIDA REGISTERED ENGINEER

4/28/00