MIAMI-DADE COUNTY, FLORIDA
METRO-DADE FLAGLER BUILDING

BUILDING CODE COMPLIANCE OFFICE
METRO-DADE FLAGLER BUILDING
140 WEST FLAGLER STREET, SUITE 1603
MIAMI, FLORIDA 33130-1563
(305) 375-2901 FAX (305) 375-2908

CONTRACTOR LICENSING SECTION
(305) 375-2527 FAX (305) 375-2558

CONTRACTOR ENFORCEMENT SECTION
(305) 375-2966 FAX (305) 375-2908

PRODUCT CONTROL DIVISION
(305) 375-2902 FAX (305) 372-6339

PRODUCT CONTROL NOTICE OF ACCEPTANCE

Yale Ogron Manufacturing Co., Inc.
671 West 18 Street
Hialeah FL 33010

Your application for Product Approval of:
Series 6800 Aluminum Horizontal Sliding Window
under Chapter 8 of the Code of Miami-Dade County governing the use of Alternate Materials and Types of Construction, and completely described herein, has been recommended for acceptance by the Miami-Dade County Building Code Compliance Office (BCCO) under the conditions specified herein.

This approval shall not be valid after the expiration date stated below. BCCO reserves the right to secure this product or material at anytime from a jobsite or manufacturer's plant for quality control testing.
If this product or material fails to perform in the approved manner, BCCO may revoke, modify, or suspend the use of such product or material immediately. BCCO reserves the right to revoke this approval, if it is determined BCCO that this product or material fails to meet the requirements of the South Florida Building Code.

The expense of such testing will be incurred by the manufacturer.

Acceptance No.: 99-0908.02

Expires: 01/23/2003

Raul Rodriguez
Chief Product Control Division

THIS IS THE COVERSHEET, SEE ADDITIONAL PAGES FOR SPECIFIC AND GENERAL CONDITIONS

BUILDING CODE & PRODUCT REVIEW COMMITTEE

This application for Product Approval has been reviewed by the BCCO and approved by the Building Code and Product Review Committee to be used in Dade County, Florida under the conditions set forth above.

Francisco J. Quintana, R.A.
Director
Miami-Dade County
Building Code Compliance Office

Approved: 12/09/1999

Internet mail address: postmaster@buildingcodeonline.com **Homepage: http://www.buildingcodeonline.com**

Yale Ogron Manufacturing Co.

ACCEPTANCE No. : 99-0908.02

APPROVED : DEC 0 9 1999

EXPIRES : January 23, 2003

NOTICE OF ACCEPTANCE: SPECIFIC CONDITIONS

1. SCOPE

1.1 This **renews** the Notice of Acceptance No. 96-0823.01, which was issued on January 23, 1997. It approves an aluminum horizontal sliding window, as described in Section 2 of this Notice of Acceptance, designed to comply with the South Florida Building Code, 1994 Edition for Miami-Dade County, for the locations where the pressure requirements, as determined by SFBC Chapter 23, do not exceed the Design Pressure Rating values indicated in the approved drawings.

2. PRODUCT DESCRIPTION

2.1 The **Series 6800 Aluminum Horizontal Sliding Window** and its components shall be constructed in strict compliance with the following documents: Drawing No. **W96-25**, titled "Series 6800 Sliding Type Window", prepared by Al-Farooq Corporation, dated August 1, 1996, revised on November 26, 1996, sheets 1 and 2 of 2, signed and sealed by Dr. H. Farooq, P.E., bearing the Miami-Dade County Product Control Approval stamp with the Notice of Acceptance number and approval date by the Miami-Dade County Product Control Division. These documents shall hereinafter be referred to as the approved drawings.

3. LIMITATIONS

3.1 This approval applies to single unit applications only, as shown in approved drawings.

4. INSTALLATION

4.1 The aluminum horizontal sliding window and its components shall be installed in strict compliance with the approved drawings.

4.2 Hurricane protection system (shutters): the installation of this unit **will require** a hurricane protection system.

5. LABELING

5.1 Each unit shall bear a permanent label with the manufacturer's name or logo, city, state and following statement: "Miami-Dade County Product Control Approved".

6. BUILDING PERMIT REQUIREMENTS

6.1 Application for building permit shall be accompanied by copies of the following:

6.1.1 This Notice of Acceptance.

6.1.2 Duplicate copies of the approved drawings, as identified in Section 2 of this Notice of Acceptance, clearly marked to show the components selected for the proposed installation.

6.1.3 Any other documents required by the Building Official or the South Florida Building Code (SFBC) in order to properly evaluate the installation of this system.

Manuel Perez

Manuel Perez, P.E., Product Control Examiner
Product Control Division

Yale Ogron Manufacturing Co.

ACCEPTANCE No. : 99-0908.02

APPROVED : DEC 09 1999

EXPIRES : January 23, 2003

NOTICE OF ACCEPTANCE: STANDARD CONDITIONS

1 Renewal of this Acceptance (approval) shall be considered after a renewal application has been filed and the original submitted documents, including test-supporting data, engineering documents, are no older than eight (8) years.

2. Any and all approved products shall be permanently labeled with the manufacturer's name, city, state, and the following statement: "Miami-Dade County Product Control Approval", or as specifically stated in the specific conditions of this Acceptance.

3. Renewals of Acceptance will not be considered if:
   a. There has been a change in the South Florida Building Code affecting the evaluation of this product and the product is not in compliance with the code changes.
   b. The product is no longer the same product (identical) as the one originally approved.
   c. If the Acceptance holder has not complied with all the requirements of this acceptance, including the correct installation of the product.
   d. The engineer who originally prepared, signed and sealed the required documentation initially submitted, is no longer practicing the engineering profession.

4. Any revision or change in the materials, use, and/or manufacture of the product or process shall automatically be cause for termination of this Acceptance, unless prior written approval has been requested (through the filing of a revision application with appropriate fee) and granted by this office.

5. Any of the following shall also be grounds for removal of this Acceptance:
   a. Unsatisfactory performance of this product or process.
   b. Misuse of this Acceptance as an endorsement of any product, for sales, advertising or any other purposes.

6. The Notice of Acceptance number preceded by the words Miami-Dade County, Florida, and followed by the expiration date may be displayed in advertising literature. If any portion of the Notice of Acceptance is displayed, then it shall be done in its entirety.

7. A copy of this Acceptance as well as approved drawings and other documents, where it applies, shall be provided to the user by the manufacturer or its distributors and shall be available for inspection at the job site at all time. The engineer need not reseal the copies.

8. Failure to comply with any section of this Acceptance shall be cause for termination and removal of Acceptance.

9. This Notice of Acceptance consists of pages 1 through 3.

END OF THIS ACCEPTANCE

Manuel Perez, P.E., Product Control Examiner
Product Control Division

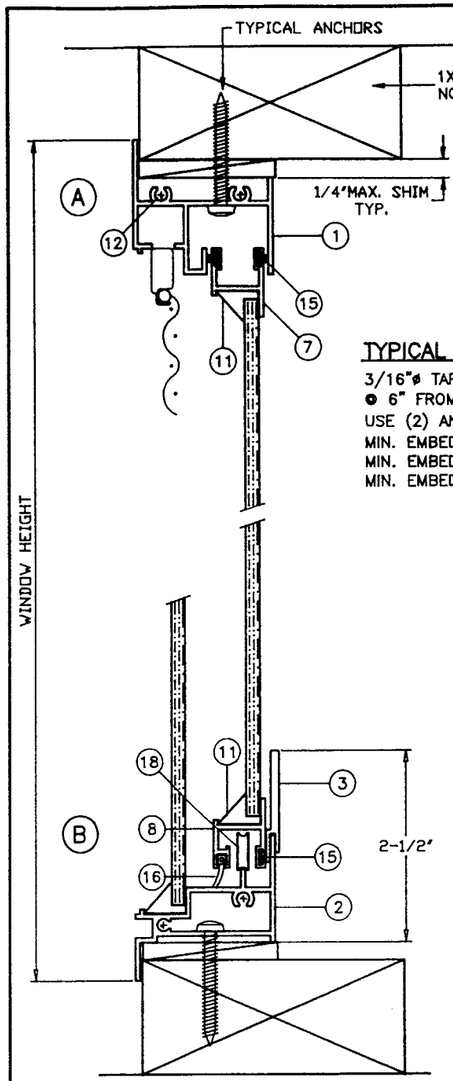

TYPICAL ANCHORS

3/16"ø TAPCONS, SPACED AS PER PRODUCT APPROVAL
● 6" FROM ENDS & 21" O.C. TYP. AT HEAD, SILL & JAMBS
USE (2) ANCHORS AT MTG. RAIL END ● HEAD & SILL
MIN. EMBED. INTO CONC. = 1-1/4"
MIN. EMBED. INTO 2BY WOOD BUCK = 1-1/4"
MIN. EMBED. THRU 1BY WOOD BUCK INTO MASONRY = 1-1/4"

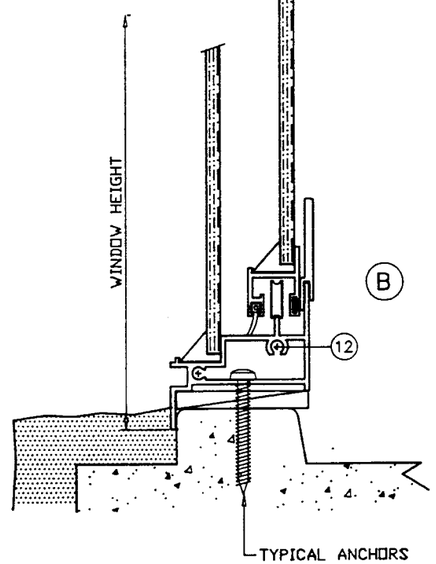

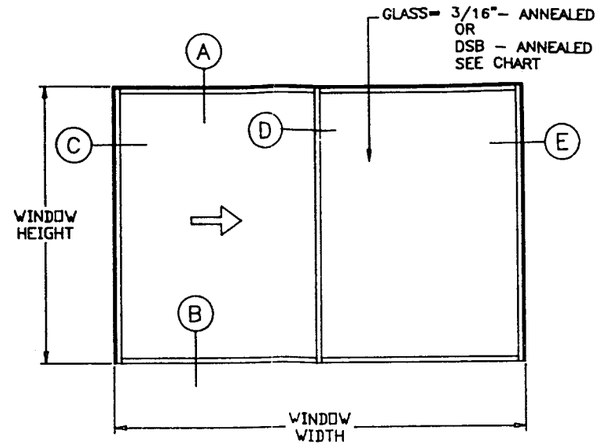

TYPICAL ELEVATION
(XO OR OX ONLY)

ALUMINUM HORIZ. SLIDING WINDOW SERIES 6800 COMPARATIVE ANALYSIS CHART

BASED ON FTL-1399 OF 06-28-96
TEST SIZE = 96-1/2" X 61" (XOX)
TEST LOADS = +83.0, -83.0 PSF
DESIGN LOADS = +55.3, -55.3 PSF
WATER INFILTRATION TEST = 8.3 PSF
TESTED GLASS = 3/16"- ANNEALED.

BASED ON FTL-1400 OF 03-26-96
TEST SIZE = 53-1/8" X 38-1/2" (XO)
TEST LOADS = +105.0, -105.0 PSF
DESIGN LOADS = +70.0, -70.0 PSF
WATER INFILTRATION TEST = 8.3 PSF
TESTED GLASS = DSB - ANNEALED.

NOTES:

1. WOOD BUCKS BY OTHERS, MUST BE ANCHORED PROPERLY TO TRANSFER LOADS TO THE STRUCTURE.
2. ANCHOR CONDITIONS NOT DESCRIBED IN THIS APPROVAL ARE NOT PART OF THIS PRODUCT APPROVAL.
3. WINDOWS GLAZED WITH 1/4" GLASS OVERLAP ALL AROUND USING ROLL FORMED ALUMINUM GLAZING BEAD AND ADHESIVE COMPOUND WITH COLOR TO MATCH METAL FINISH.

XO OR OX SIZES ONLY					
DESIGN LOAD CAPACITY - PSF					
WINDOW DIMS.		3/16"- ANNEALED		DSB - ANNEALED	
WIDTH	HEIGHT	EXT.	INT.	EXT.	INT.
24"	24"	55.3	370.1	55.3	217.1
36"		55.3	296.1	55.3	166.2
48"		55.3	220.9	55.3	121.1
60"		55.3	173.6	-	-
72"		55.3	143.0	-	-
24"	36"	55.3	222.1	55.3	130.2
36"		55.3	164.5	55.3	96.5
48"		55.3	138.8	55.3	77.7
60"		55.3	111.3	-	-
72"		55.3	91.7	-	-
24"	48"	55.3	158.6	-	-
36"		55.3	113.9	-	-
48"		55.3	92.5	-	-
60"		55.3	80.8	-	-
72"		55.3	67.5	-	-
24"	60"	55.3	123.4	-	-
36"		55.3	87.1	-	-
48"		55.3	69.4	-	-
60"		55.3	59.2	-	-
72"		52.7	52.7	-	-
26-1/2"	26"	55.3	311.4	55.3	182.7
37"		55.3	258.0	55.3	147.4
53-1/8"		55.3	181.0	55.3	99.3
74"		55.3	127.1	-	-
26-1/2"	38-3/8"	55.3	190.0	55.3	111.5
37"		55.3	148.4	55.3	87.0
53-1/8"		55.3	118.4	55.3	65.0
74"		55.3	83.2	-	-
26-1/2"	50-5/8"	55.3	137.1	-	-
37"		55.3	104.4	-	-
53-1/8"		55.3	80.6	-	-
74"		55.3	62.0	-	-
26-1/2"	63"	55.3	107.0	-	-
37"		55.3	80.4	-	-
53-1/8"		55.3	58.3	-	-
74"		45.0	45.0	-	-

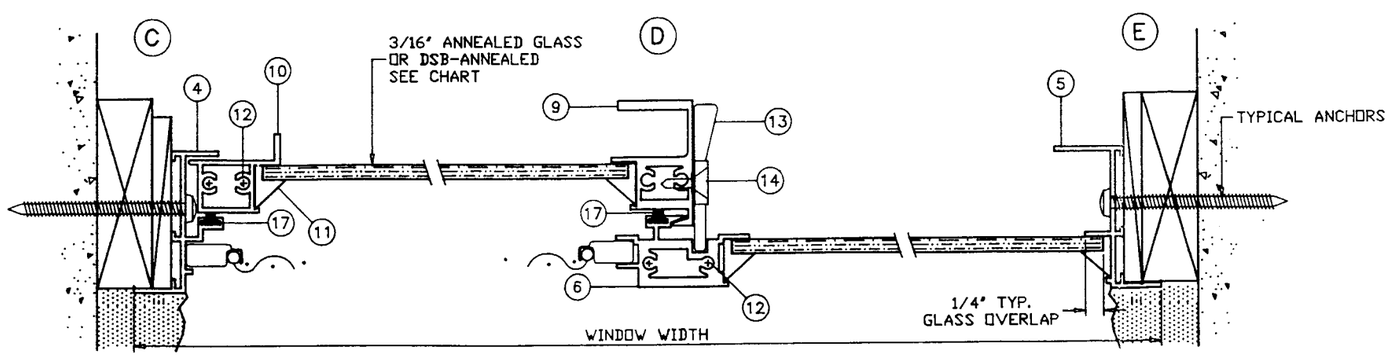

APPROVED AS COMPLYING WITH THE SOUTH FLORIDA BUILDING CODE
DATE December 07 19 99.
BY Manuel Perez
PRODUCT CONTROL DIVISION
BUILDING CODE COMPLIANCE OFFICE
ACCEPTANCE NO. 97-0908.02

Engr: DR. HUMAYOUN FAROOQ
STRUCTURES
FLA. PE # 16557

DEC 30 1996

APPROVED AS COMPLYING WITH THE SOUTH FLORIDA BUILDING CODE
DATE JANUARY 23 1997
BY Helmy A. Makar
PRODUCT CONTROL DIVISION
BUILDING CODE COMPLIANCE OFFICE
ACCEPTANCE NO. 96-0823.01

AL-FAROOQ CORPORATION
ENGINEERS, PLANNERS & PRODUCT TESTING
1235 SW 87 AVE
MIAMI, FLORIDA 33174
(305) 264-8100
COMP-ANL\W96-25YO

SERIES 6800 SLIDING TYPE WINDOW

YALE OGRON MFG.
671 WEST 18TH ST.
HIALEAH, FL. 33010
(305) - 887-2646

revisions:

no	date	by	description
A	11.13.96	H	JAMBS & MEETING RAILS REV.
A	11.26.96	H	GENERAL REVISION

date: 06-01-96
scale: 1/2" = 1"
design by:
drawn by: HAMID
checked by:

drawing no. W96-25

sheet 1 of 2

ITEM #	PART #	REQD.	DESCRIPTION	REMARKS
1	YE-5001	1	FRAME HEAD	6063-T5
2	YE-5004	1	FRAME SILL	6063-T5
3	YE-5006	1	SILL RISER	6063-T5
4	YE-5002	AS REQD.	FRAME JAMB-VENT	6063-T5
5	YE-5003	AS REQD.	FRAME JAMB-FIXED	6063-T5
6	YE-5019	1/ VENT	FIXED MTG. RAIL	6063-T6
7	YE-5009	1/ VENT	VENT TOP RAIL	6063-T5
8	YE-5008	1/ VENT	VENT BOTTOM RAIL	6063-T5
9	YE-5018	1/ VENT	VENT INTERLOCK	6063-T6
10	YE-5007	1/ VENT	JAMB RAIL	6063-T6
11		AS REQD.	GLAZING BEAD	ROLL FORMED ALUM.
12	#10X3/4" SMS	AS REQD.	FRAME & VENT ASSY. SCREW	CAD PLATED SMS W/ #8 HEAD
13	YH-6016	1/ VENT	CAM LATCH	ZAMAK PLATED OR PAINTED
14	#10X3/4" SMS	2/ LATCH	LATCH INST. SCREW	CAD PLATED CRS
15	-	AS REQD.	FIN SEAL PILE W/ STRIP	TOP & BOTTOM RAILS
16	-	AS REQD.	FIN SEAL PILE W/ STRIP	BOTTOM RAIL
17	-	AS REQD.	-	AT VERTICALS
18	YH-6001	2/ VENT	ROLLER ASSY.	YH-6002 & YH-6003

weepholes are not shown see sect # 2.7

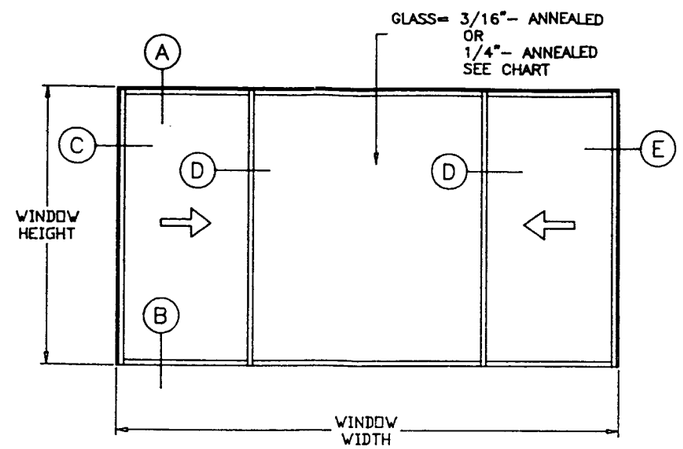

TYPICAL ELEVATION
(XOX ONLY)

XOX SIZES ONLY					
DESIGN LOAD CAPACITY - PSF					
WINDOW DIMS.		3/16"- ANNEALED		1/4"- ANNEALED	
WIDTH	HEIGHT	EXT.	INT.	EXT.	INT.
72"	24"	55.3	147.5	55.3	217.7
85"		55.3	123.2	55.3	182.0
108"		55.3	95.4	55.3	141.0
72"	36"	55.3	94.6	55.3	139.7
85"		55.3	79.0	55.3	116.7
108"		55.3	61.2	55.3	90.4
72"	48"	55.3	69.6	55.3	89.7
85"		55.3	58.1	55.3	82.8
108"		45.0	45.0	55.3	66.6
72"	60"	55.0	55.0	55.3	65.8
85"		46.0	46.0	55.3	59.3

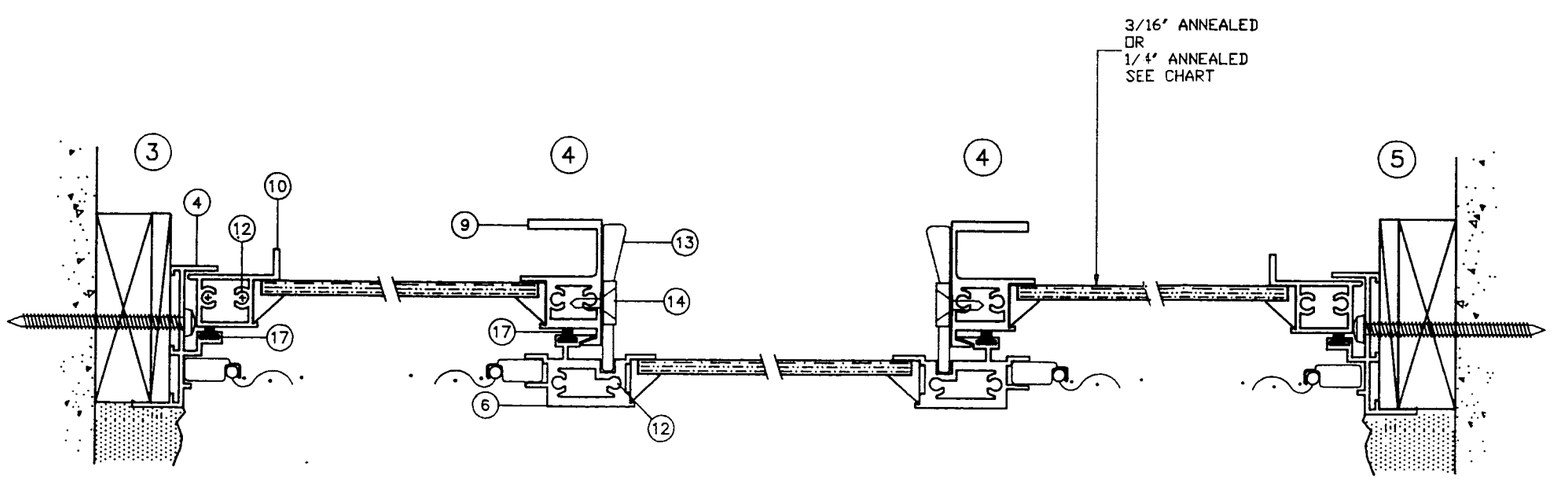

APPROVED AS COMPLYING WITH THE
SOUTH FLORIDA BUILDING CODE
DATE December 29 19 99
BY Manuel Perez
PRODUCT CONTROL DIVISION
BUILDING CODE COMPLIANCE OFFICE
ACCEPTANCE NO. 99-0908.02

Engr: DR. HUMAYOUN FAROOQ
STRUCTURES
FLA. PE # 16557

DEC 30 1996

APPROVED AS COMPLYING WITH THE
SOUTH FLORIDA BUILDING CODE
DATE JANUARY 23 1997
BY Helmy A. Makk
PRODUCT CONTROL DIVISION
BUILDING CODE COMPLIANCE OFFICE
ACCEPTANCE NO. 96-0823.01

a f c

AL-FAROOQ CORPORATION
ENGINEERS, PLANNERS & PRODUCT TESTING
1235 SW 87 AVE
MIAMI, FLORIDA 33174
(305) 264-8100

COMP-ANL\W96-25YO

SERIES 6800 SLIDING TYPE WINDOW

YALE OGRON MFG.
671 WEST 18TH ST.
HIALEAH, FL. 33010
(305) - 887-2646

revisions:

no	date	by	description

date: 08-01-96
scale: 1/2" = 1'
design by:
drawn by: HAMID
checked by:

drawing no.
W96-25

sheet 2 of 2