MIAMI-DADE COUNTY, FLORIDA
METRO-DADE FLAGLER BUILDING

BUILDING CODE COMPLIANCE OFFICE
METRO-DADE FLAGLER BUILDING
140 WEST FLAGLER STREET, SUITE 1603
MIAMI, FLORIDA 33130-1563
(305) 375-2901 FAX (305) 375-2908

CONTRACTOR LICENSING SECTION
(305) 375-2527 FAX (305) 375-2558

CONTRACTOR ENFORCEMENT SECTION
(305) 375-2966 FAX (305) 375-2908

PRODUCT CONTROL DIVISION
(305) 375-2902 FAX (305) 372-6339

PRODUCT CONTROL NOTICE OF ACCEPTANCE

Sunshine Windows Manufacturing, Inc.
1745 W. 33 rd Place
Hialeah FL 33012

Your application for Product Approval of:
Series 1650 Aluminum Horizontal Sliding Window
under Chapter 8 of the Code of Miami-Dade County governing the use of Alternate Materials and Types of Construction, and completely described herein, has been recommended for acceptance by the Miami-Dade County Building Code Compliance Office (BCCO) under the conditions specified herein.

This approval shall not be valid after the expiration date stated below. BCCO reserves the right to secure this product or material at anytime from a jobsite or manufacturer's plant for quality control testing.
If this product or material fails to perform in the approved manner, BCCO may revoke, modify, or suspend the use of such product or material immediately. BCCO reserves the right to revoke this approval, if it is determined BCCO that this product or material fails to meet the requirements of the South Florida Building Code.

The expense of such testing will be incurred by the manufacturer.

Acceptance No.: 99-0909.05

Expires: 03/17/2003

Raul Rodriguez
Chief Product Control Division

THIS IS THE COVERSHEET, SEE ADDITIONAL PAGES FOR SPECIFIC AND GENERAL CONDITIONS

BUILDING CODE & PRODUCT REVIEW COMMITTEE

This application for Product Approval has been reviewed by the BCCO and approved by the Building Code and Product Review Committee to be used in Dade County, Florida under the conditions set forth above.

Francisco J. Quintana, R.A.
Director
Miami-Dade County
Building Code Compliance Office

Approved: 03/17/2000

Internet mail address: postmaster@buildingcodeonline.com **Homepage: http://www.buildingcodeonline.com**

Sunshine Windows Manufacturing, Inc.

ACCEPTANCE No. : 99-0909.05

APPROVED : MAR 1 7 2000

EXPIRES : MAR 1 7 2003

NOTICE OF ACCEPTANCE: SPECIFIC CONDITIONS

1. SCOPE

1.1 It approves an aluminum horizontal sliding window, as described in Section 2 of this Notice of Acceptance, designed to comply with the South Florida Building Code, 1994 Edition for Miami-Dade County, for the locations where the pressure requirements, as determined by SFBC Chapter 23, do not exceed the Design Pressure Rating values indicated in the approved drawings.

2. PRODUCT DESCRIPTION

2.1 The **Series 1650 Aluminum Horizontal Sliding Window –Impact and Non-Impact Resistant** and its components shall be constructed in strict compliance with the following documents: Drawing No. **HS99-04**, titled "Series 1650 Aluminum Horizontal Sliding Window (XO)", prepared by the manufacturer, dated August 16, 1999, Sheets 1 thru 5 of 5, signed and sealed by Francisco Hernandez, P.E., bearing the Miami-Dade County Product Control Approval stamp with the Notice of Acceptance number and approval date by the Miami-Dade County Product Control Division. These documents shall hereinafter be referred to as the approved drawings.

3. LIMITATIONS

3.1 This approval applies to single unit applications only, as shown in approved drawings.

4. INSTALLATION

4.1 The aluminum horizontal sliding window and its components shall be installed in strict compliance with the approved drawings.

4.2 Hurricane protection system (shutters): to determine whether the installation requires a hurricane protection system or not, see corresponding table in approved drawing.

5. LABELING

5.1 Each unit shall bear a permanent label with the manufacturer's name or logo, city, state and following statement: "Miami-Dade County Product Control Approved".

6. BUILDING PERMIT REQUIREMENTS

6.1 Application for building permit shall be accompanied by copies of the following:

- **6.1.1** This Notice of Acceptance.
- **6.1.2** Duplicate copies of the approved drawings, as identified in Section 2 of this Notice of Acceptance, clearly marked to show the components selected for the proposed installation.
- **6.1.3** Any other documents required by the Building Official or the South Florida Building Code (SFBC) in order to properly evaluate the installation of this system.

Manuel Perez

Manuel Perez, P.E., Product Control Examiner
Product Control Division

Sunshine Windows Manufacturing, Inc.

ACCEPTANCE No. : 99-0909.05

APPROVED : MAR 1 7 2000

EXPIRES : MAR 1 7 2003

NOTICE OF ACCEPTANCE: STANDARD CONDITIONS

1 Renewal of this Acceptance (approval) shall be considered after a renewal application has been filed and the original submitted documents, including test-supporting data, engineering documents, are no older than eight (8) years.

2. Any and all approved products shall be permanently labeled with the manufacturer's name, city, state, and the following statement: "Miami-Dade County Product Control Approval", or as specifically stated in the specific conditions of this Acceptance.

3. Renewals of Acceptance will not be considered if:
   a. There has been a change in the South Florida Building Code affecting the evaluation of this product and the product is not in compliance with the code changes.
   b. The product is no longer the same product (identical) as the one originally approved.
   c. If the Acceptance holder has not complied with all the requirements of this acceptance, including the correct installation of the product.
   d. The engineer who originally prepared, signed and sealed the required documentation initially submitted, is no longer practicing the engineering profession.

4. Any revision or change in the materials, use, and/or manufacture of the product or process shall automatically be cause for termination of this Acceptance, unless prior written approval has been requested (through the filing of a revision application with appropriate fee) and granted by this office.

5. Any of the following shall also be grounds for removal of this Acceptance:
   a. Unsatisfactory performance of this product or process.
   b. Misuse of this Acceptance as an endorsement of any product, for sales, advertising or any other purposes.

6. The Notice of Acceptance number preceded by the words Miami-Dade County, Florida, and followed by the expiration date may be displayed in advertising literature. If any portion of the Notice of Acceptance is displayed, then it shall be done in its entirety.

7. A copy of this Acceptance as well as approved drawings and other documents, where it applies, shall be provided to the user by the manufacturer or its distributors and shall be available for inspection at the job site at all time. The engineer need not reseal the copies.

8. Failure to comply with any section of this Acceptance shall be cause for termination and removal of Acceptance.

9. This Notice of Acceptance consists of pages 1 through 3.

END OF THIS ACCEPTANCE

Manuel Perez, P.E., Product Control Examiner
Product Control Division

DESIGN PRESSURE CHART - PSF							
SERIES 1650 ALUMINUM HORIZONTAL SLIDING WINDOW (XO)							
1/4" TEMPERED GLASS							
WINDOW DIMENSION		ANCHOR SCHEDULE		HURRICANE PROCTECTION IS REQUIRED			
		PER HEAD & SILL	PER JAMB	1 3/4" SILL		3" SILL	
WIDTH	HEIGHT			EXT.	INT.	EXT.	INT.
STANDARD SIZES							
26 1/2"	26"	3	3	53.3	474.0	83.3	474.0
37"		3		53.3	262.2	83.3	262.2
53 1/8"		4		53.3	207.3	83.3	207.3
74"		6		53.3	203.7	83.3	203.7
26 1/2"	38 3/8"	3	4	53.3	327.1	83.3	327.1
37"		3		53.3	237.7	83.3	237.7
53 1/8"		4		53.3	164.4	83.3	164.4
74"		6		53.3	151.8	83.3	151.8
37"	50 5/8"	3	5	53.3	196.5	83.3	196.5
53 1/8"		4		53.3	150.7	83.3	150.7
74"		6		53.3	125.5	83.3	125.5
37"	63"	3	5	53.3	150.6	83.3	150.6
53 1/8"		4		53.3	112.6	83.3	112.6
74"		6		53.3	90.0	83.3	90.0
MODULAR SIZES							
24"	24"	3	3	53.3	582.4	83.3	582.4
36"		3		53.3	285.0	83.3	285.0
48"		4		53.3	251.6	83.3	251.6
60"		5		53.3	235.0	83.3	235.0
72"		6		53.3	225.1	83.3	225.1
24"	36"	3	4	53.3	380.0	83.3	380.0
36"		3		53.3	251.5	83.3	251.5
48"		4		53.3	198.9	83.3	198.9
60"		5		53.3	176.8	83.3	176.8
72"		6		53.3	164.5	83.3	164.5
36"	48"	3	4	53.3	198.9	83.3	198.9
48"		4		53.3	173.5	83.3	173.5
60"		5		53.3	151.1	83.3	151.1
72"		6		53.3	138.0	83.3	138.0
36"	60"	3	5	53.3	163.4	83.3	163.4
48"		4		53.3	129.4	83.3	129.4
60"		5		53.3	110.1	83.3	110.1
72"		6		53.3	98.1	83.3	98.1

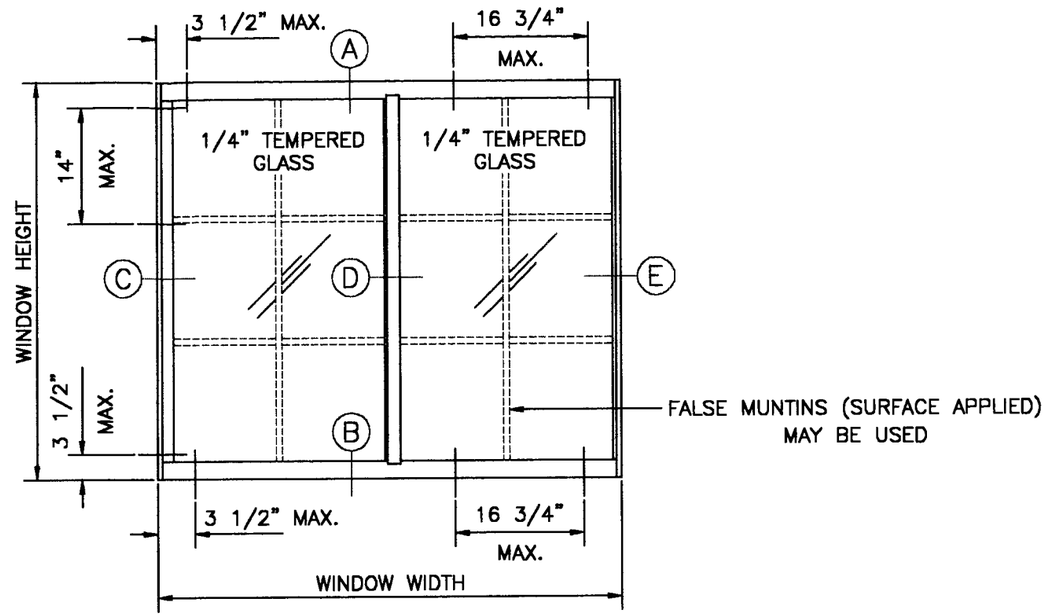

TYPICAL ELEVATION (XO)

NON - IMPACT WINDOW

NOTE:

FOR NUMBER OF ANCHORS REQUIRED FOR EACH UNIT SIZE REFER TO ANCHOR SCHEDULE COLUMN IN THE DESIGN PRESSURE CHART

BASED ON FTL-2353 DATED 6-15-99
TEST SIZE= 74" X 63" (XO)
TEST LOADS= +135.0 -135.0 PSF
DESIGN LOADS= +90.0 -90.0 PSF
CYCLIC WIND LOAD TEST=+90.0 -90.0 PSF
WATER INFILTRATION TEST= 8.0 AND 12.5 PSF
TESTED GLASS= 1/4" TEMPERED

APPROVED AS COMPLYING WITH THE SOUTH FLORIDA BUILDING CODE
DATE March 17, 2000
BY Manuel Perez
PRODUCT CONTROL DIVISION
BUILDING CODE COMPLIANCE OFFICE
ACCEPTANCE NO. 99-0909.05

02-22-00
FRANCISCO HERNANDEZ
FLORIDA PE # 51393

Sunshine Windows Manufacturing, Inc.
1745 W. 33rd Place
Hialeah, Florida 33012
Ph: (305)364-9952
Fax:(305)828-5118

FRANCISCO HERNANDEZ P. E.
Structural Engineering
351 NW 82nd AVE #1118
Miami, Florida 33126
Phone (305) 266 8670
Fax (305) 266 3427

SERIES 1650 ALUMINUM HORIZONTAL SLIDING WINDOW (XO)
1/4" TEMPERED GLASS

Drawn By: MH
Date: 8-16-99
Scale: 1/2"=1'
Revision:
Revision:

DRAWING NO. HS99-04

SHEET 1 OF 5

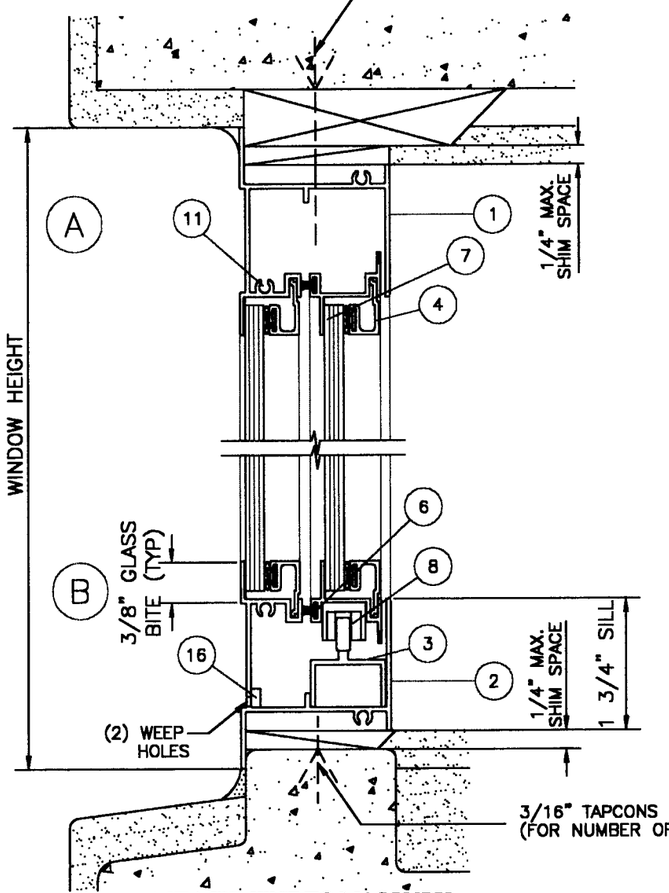

ATTACHMENT TO MASONRY
VERTICAL SECTION

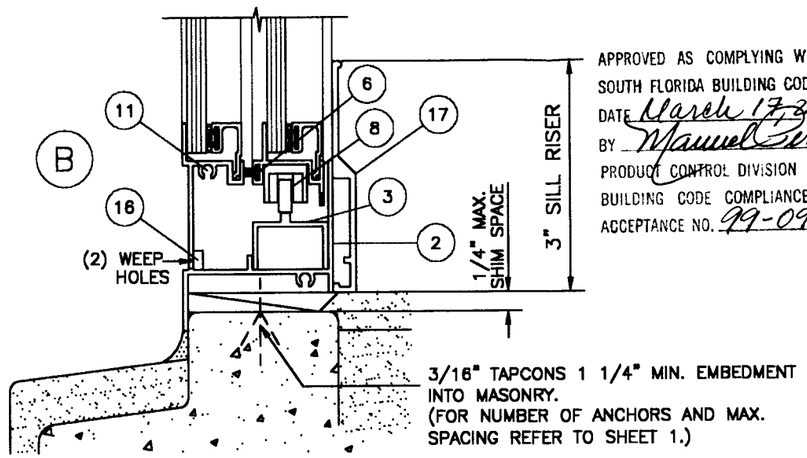

VERTICAL SECTION WITH SILL RISER

APPROVED AS COMPLYING WITH THE
SOUTH FLORIDA BUILDING CODE
DATE March 17, 2000
BY Manuel Cruz
PRODUCT CONTROL DIVISION
BUILDING CODE COMPLIANCE OFFICE
ACCEPTANCE NO. 99-0909.05

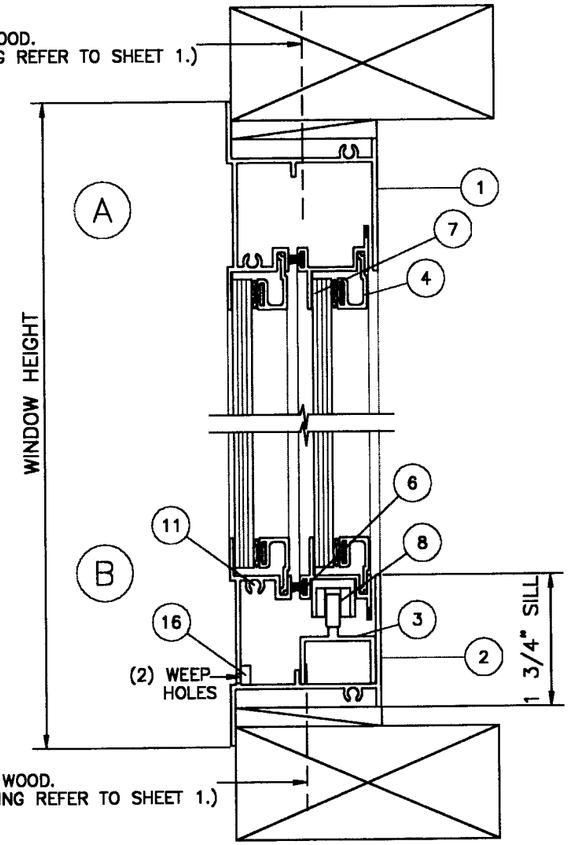

ATTACHMENT TO WOOD
VERTICAL SECTION

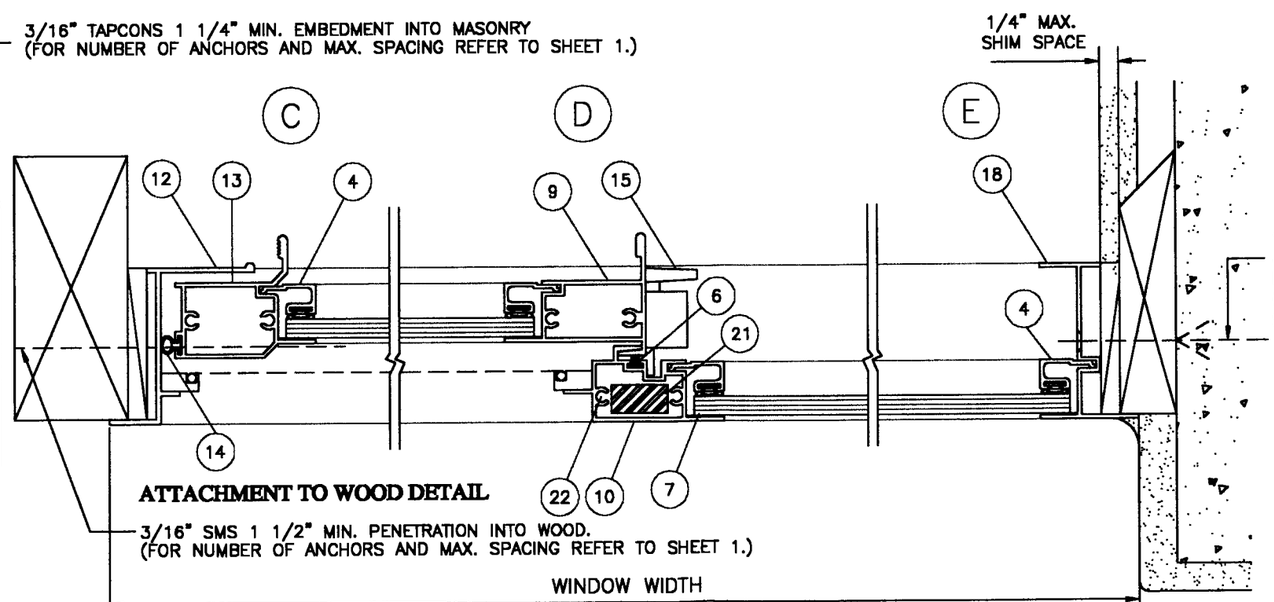

ATTACHMENT TO WOOD DETAIL

ATTACHMENT TO MASONRY DETAIL
3/16" TAPCONS 1 1/4" MIN. EMBEDMENT
INTO MASONRY.
(FOR NUMBER OF ANCHORS AND MAX.
SPACING REFER TO SHEET 1.)

HORIZONTAL SECTION

GLAZING:
MATERIAL: 1/4" TEMPERED GLASS

METHOD:
USE ADHESIVE BEDDING COMPOUND AND GLAZING FOAM TAPE ON EXTERIOR.
EXTRUDED ALUMINUM SNAP ON GLAZING BEAD WITH VINYL BULB ON INTERIOR. GLAZING BEAD WAS FASTENED TO FRAME IN TEST UNIT WITH No: 8 BY 1" FHSMS TWO AT EACH HORIZONTAL BEAD AND THREE AT EACH VERTICAL BEAD IN TEST UNIT

WOOD BUCKS NOT BY SUNSHINE WINDOWS MUST SUSTAIN IMPOSED LOADS BY GLAZING SYSTEM.

02-22-00
FRANCISCO HERNANDEZ
FLORIDA PE # 51393

Sunshine Windows Manufacturing, Inc.
1745 W. 33rd Place
Hialeah, Florida 33012
Ph: (305)364-9952
Fax:(305)828-5118

FRANCISCO HERNANDEZ P.E.
Structural Engineering
351 NW 82nd AVE #1118
Miami, Florida 33126
Phone (305) 266 8670
Fax (305) 266 3427

SERIES 1650 ALUMINUM
HORIZONTAL SLIDING WINDOW (XO)
1/4" TEMPERED GLASS

Drawn By: MH
Date: 8-16-99
Scale: 1/2"=1"
Revision:
Revision:

DRAWING NO.
HS99-04

SHEET
2 OF 5

DESIGN PRESSURE CHART - PSF

SERIES 1650 ALUMINUM HORIZONTAL SLIDING WINDOW (XO)

3/8" HEAT STRENGTHENED LAMINATED IMPACT RESISTANT GLASS

	WINDOW DIMENSION		ANCHOR SCHEDULE		HURRICANE PROCTECTION IS NOT REQUIRED			
			PER HEAD & SILL	PER JAMB	1 3/4" SILL		3" SILL	
	WIDTH	HEIGHT			EXT.	INT.	EXT.	INT.
STANDARD SIZES	26 1/2"	26"	3	3	53.3	90.0	80.0	90.0
	37"		3		53.3	90.0	80.0	90.0
	53 1/8"		4		53.3	90.0	80.0	90.0
	74"		6		53.3	90.0	80.0	90.0
	26 1/2"	38 3/8"	3	4	53.3	90.0	80.0	90.0
	37"		3		53.3	90.0	80.0	90.0
	53 1/8"		4		53.3	90.0	80.0	90.0
	74"		6		53.3	90.0	80.0	90.0
	37"	50 5/8"	3	5	53.3	90.0	80.0	90.0
	53 1/8"		4		53.3	90.0	80.0	90.0
	74"		6		53.3	90.0	80.0	90.0
	37"	63"	3	5	53.3	90.0	80.0	90.0
	53 1/8"		4		53.3	90.0	80.0	90.0
	74"		6		53.3	90.0	80.0	90.0
MODULAR SIZES	24"	24"	3	3	53.3	90.0	80.0	90.0
	36"		3		53.3	90.0	80.0	90.0
	48"		4		53.3	90.0	80.0	90.0
	60"		5		53.3	90.0	80.0	90.0
	72"		6		53.3	90.0	80.0	90.0
	24"	36"	3	4	53.3	90.0	80.0	90.0
	36"		3		53.3	90.0	80.0	90.0
	48"		4		53.3	90.0	80.0	90.0
	60"		5		53.3	90.0	80.0	90.0
	72"		6		53.3	90.0	80.0	90.0
	36"	48"	3	4	53.3	90.0	80.0	90.0
	48"		4		53.3	90.0	80.0	90.0
	60"		5		53.3	90.0	80.0	90.0
	72"		6		53.3	90.0	80.0	90.0
	36"	60"	3	5	53.3	90.0	80.0	90.0
	48"		4		53.3	90.0	80.0	90.0
	60"		5		53.3	90.0	80.0	90.0
	72"		6		53.3	90.0	80.0	90.0

BASED ON FTL-2316 DATED 6-15-99
TEST SIZE= 74" X 63" (XO)
TEST LOADS= +120.0 -135.0 PSF
DESIGN LOADS= +80.0 -90.0 PSF
WATER INFILTRATION TEST= 8.0 AND 12.0 PSF
TESTED GLASS= 3/8" HEAT STRENTHENED LAMINATED
CYCLIC WIND LOAD TEST= +90.0 -90.0 PSF

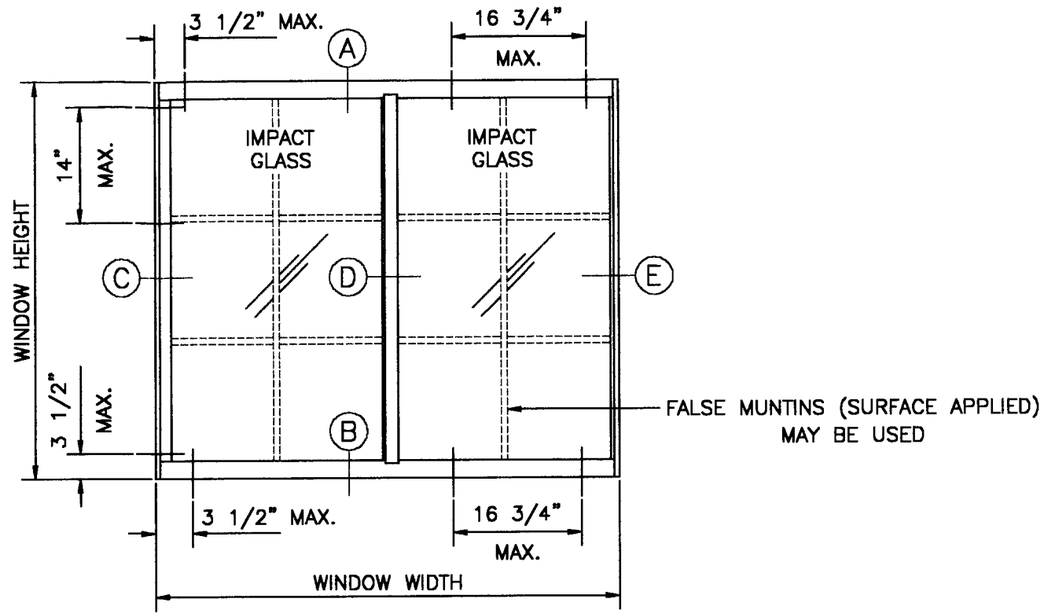

TYPICAL ELEVATION (XO)

IMPACT RESISTANT WINDOW

NOTE:

FOR NUMBER OF ANCHORS REQUIRED FOR EACH UNIT SIZE REFER TO ANCHOR SCHEDULE COLUMN IN THE DESIGN PRESSURE CHART

APPROVED AS COMPLYING WITH THE SOUTH FLORIDA BUILDING CODE
DATE March 17, 2000
BY Manuel Sierra
PRODUCT CONTROL DIVISION
BUILDING CODE COMPLIANCE OFFICE
ACCEPTANCE NO. 99-0909.05

02-22-00
FRANCISCO HERNANDEZ
FLORIDA PE # 51393

Sunshine Windows Manufacturing, Inc.
1745 W. 33rd Place
Hialeah, Florida 33012
Ph: (305)364-9952
Fax:(305)828-5118

FRANCISCO HERNANDEZ P. E.
Structural Engineering
351 NW 82nd AVE #1118
Miami, Florida 33126
Phone (305) 266 8670
Fax (305) 266 3427

SERIES 1650 ALUMINUM HORIZONTAL SLIDING WINDOW (XO)
3/8" HEAT STRENGTHENED LAMINATED IMPACT RESISTANT GLASS

Drawn By: MH
Date: 8-16-99
Scale: 1/2"=1'
Revision:
Revision:

DRAWING NO. HS99-04

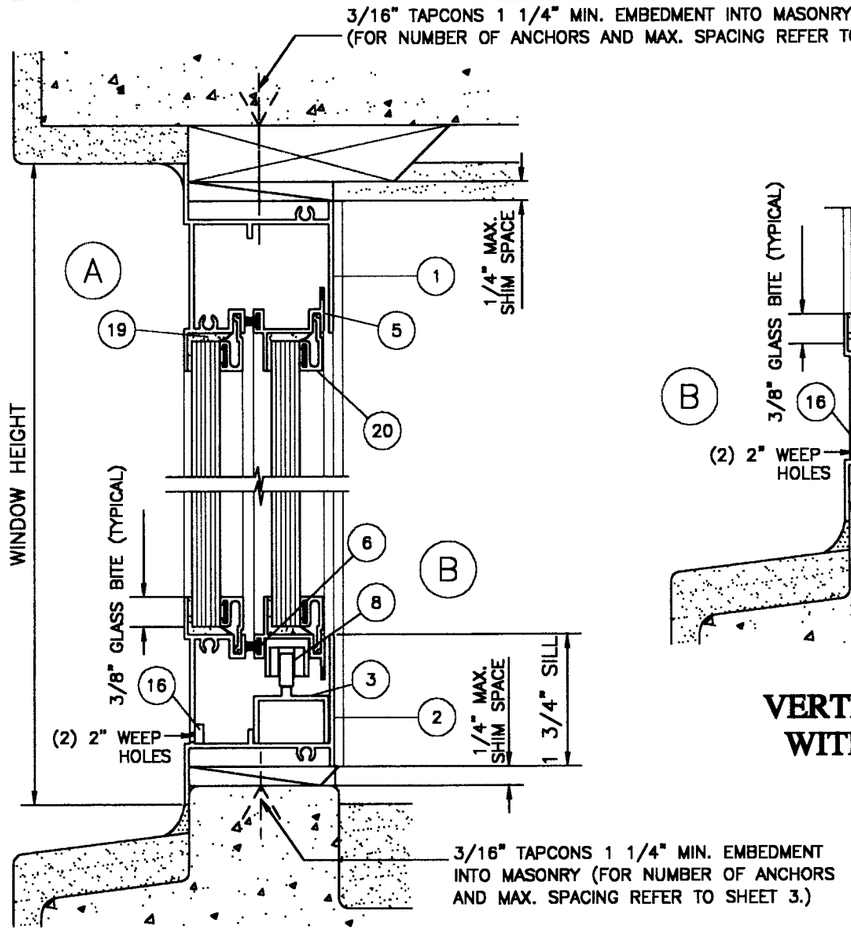

ATTACHMENT TO MASONRY
VERTICAL SECTION

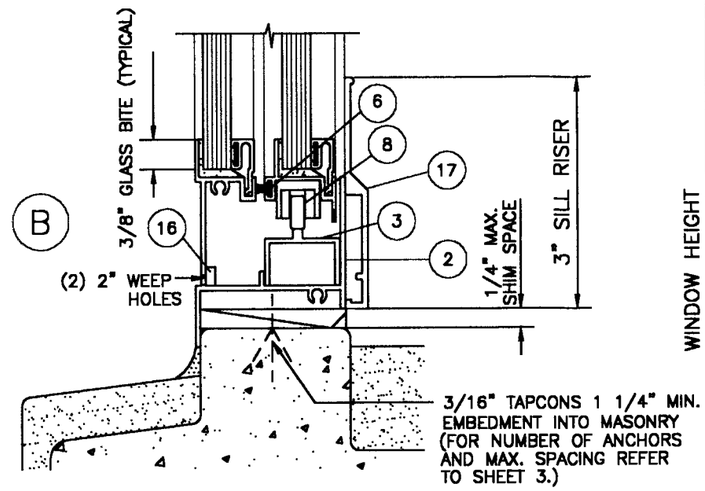

VERTICAL SECTION WITH SILL RISER

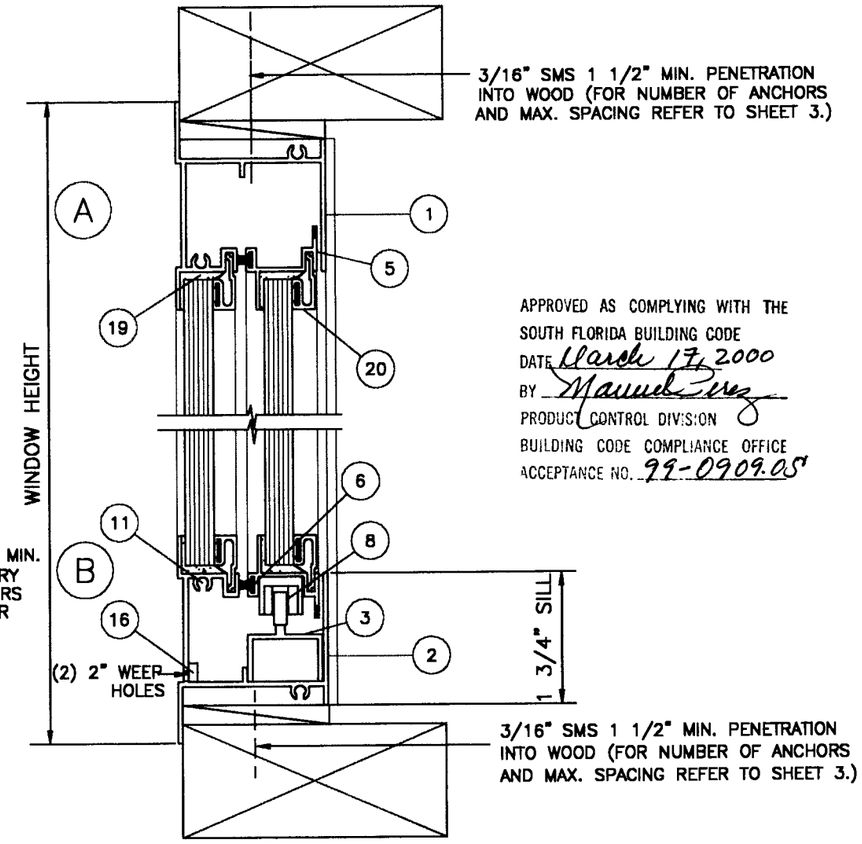

ATTACHMENT TO WOOD
VERTICAL SECTION

APPROVED AS COMPLYING WITH THE SOUTH FLORIDA BUILDING CODE
DATE March 17, 2000
BY Manuel Perez
PRODUCT CONTROL DIVISION
BUILDING CODE COMPLIANCE OFFICE
ACCEPTANCE NO. 99-0909.05

WOOD BUCKS NOT BY SUNSHINE WINDOWS MUST SUSTAIN LOADS IMPOSED BY GLAZING SYSTEM.

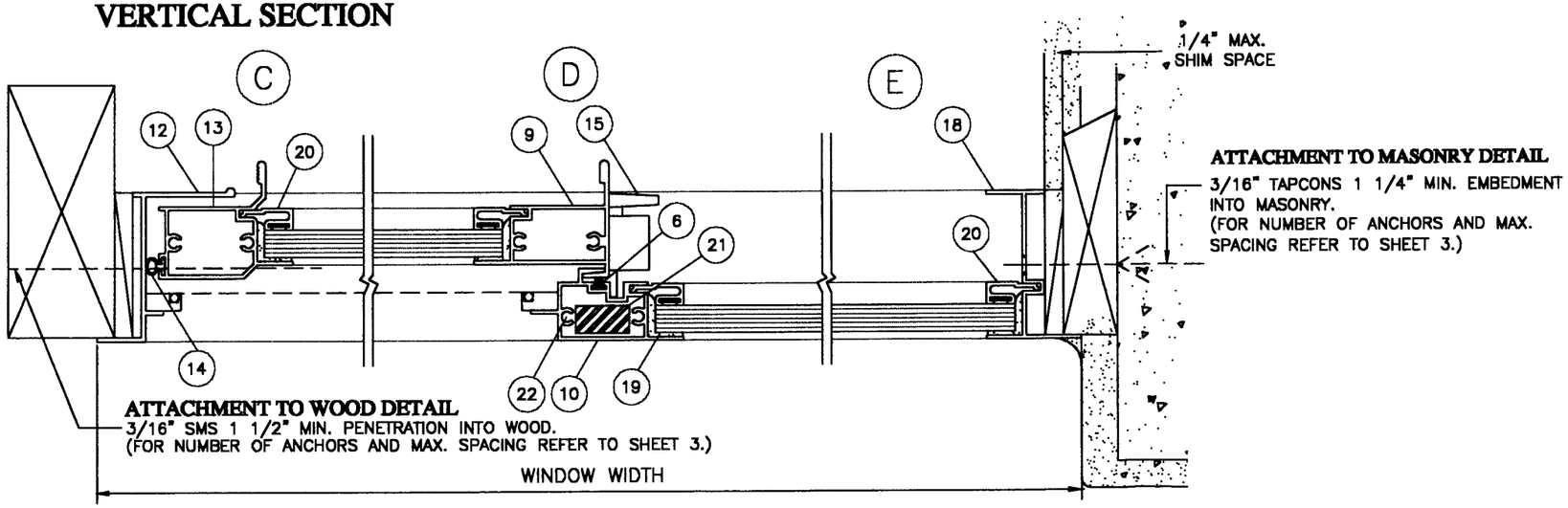

GLAZING :

MATERIAL :
3/8" OVERALL LAMINATED GLASS USING TWO LIGHTS OF 1/8" HEAT STRENGTHENED GLASS WITH AN 0.010" INTERLAYER FILM, GLASSLAM SAFETY PLUS, AND 3/8" WIDE CLOSED CELL FOAM, FRANK LOWE RUBBER AND GASKET S-10, ON EACH SIDE OF FILM AT PERIMETER EDGE.

METHOD:
INTERIOR GLAZED WITH 3/8" GLAZING PENETRATION USING SILICONE DOW CORNING 795 OR SIMILAR, AND AN EXTRUDED ALUMINUM SNAP ON GLAZING BEAD WITH A VINYL BULB BETWEEN BEAD AND GLASS. GLAZING BEAD WAS FASTENED TO FRAME IN TEST UNIT WITH NO. 8 BY 1" FHSMS TWO AT EACH HORIZONTAL BEAD AND THREE AT EACH VERTICAL BEAD

02-22-00
FRANCISCO HERNANDEZ
FLORIDA PE # 51393

IMPACT RESISTANT WINDOW

Sunshine Windows Manufacturing, Inc.
1745 W. 33rd Place
Hialeah, Florida 33012
Ph: (305)364-9952
Fax:(305)828-5118

FRANCISCO HERNANDEZ P. E.
Structural Engineering
351 NW 82nd AVE #1118
Miami, Florida 33126
Phone (305) 266 8670
Fax (305) 266 3427

SERIES 1650 ALUMINUM HORIZONTAL SLIDING WINDOW (XO)
3/8" HEAT STRENTHENED LAMINATED IMPACT RESISTANT GLASS

Drawn By: MH
Date: 8-16-99
Scale: 1/2"=1"
Revision:
Revision:

DRAWING NO. HS99-04

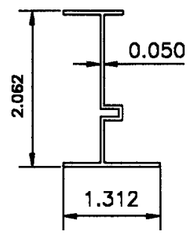

JAMB TO FIXED PANEL
SW-014
6063-T5

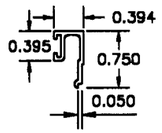

GLAZING BEAD
SW-018
6063-T5

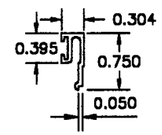

IMPACT GLAZING BEAD
SSW-101
6063-T6

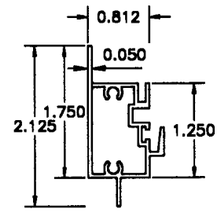

FIXED MEETING RAIL
SW-40111
6063-T5

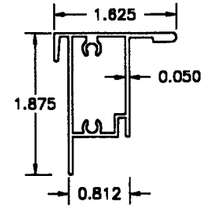

MOVING MEETING RAIL
SW-017
6063-T5

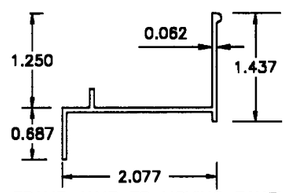

FRAME JAMB TO MOVING PANEL
SW-013
6063-T5

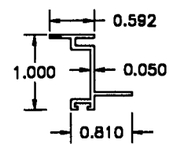

SLIDER TOP AND BOTTOM RAIL
SW-012
6063-T5

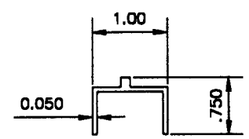

INSERT TRACK
SW-xxx21
6063-T5

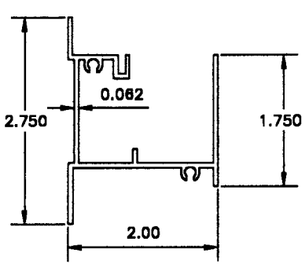

FRAME HEAD AND SILL
SW-019
6063-T5

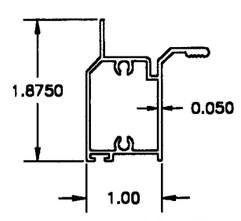

MOVING SIDE RAIL
SW-016
6063-T5

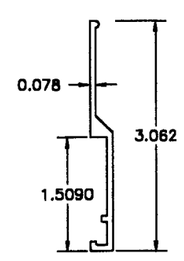

SILL RISER
SW-40771
6063-T5

MATERIAL LIST

ITEM #	PART #	REQD.	DESCRIPTION	MATERIAL
1	SW-019	1	FRAME HEAD	6063-T5
2	SW-019	1	FRAME SILL	6063-T5
3	SWxxx21	1	INSERT TRACK	6063-T5
4	SW-018	AS RQD	GLAZING BEAD	6063-T5
5	SW-012	2	SLIDER TOP/BOTTOM RAIL	6063-T5
6	SW3019	AS RQD	FIN SEAL PILE	FELT
7	SW1520	AS RQD	GLAZING TAPE	FOAM
8	SW321W	2	WHEEL	BRASS
9	SW-017	1	MOVING MEETING RAIL	6063-T5
10	SW40111	1	FIXED MEETING RAIL	6063-T5
11	SW-AS	AS RQD	ASSEMBLY SCREWS	# 8 X 1" SMS.
12	SW-013	1	JAMB TO MOVING PANEL	6063-T5
13	SW-016	1	MOVING SIDE RAIL	6063-T5
14	SW3257	AS RQD	WEATHER STRIP BULB	VINYL
15	SW-667	AS RQD	LATCH	ZINC
16	SW-S10	2/SILL	RETICULATED FILTER	FOAM
17	SW40771	1	SILL RISER	6063-T5
18	SW-014	1	JAMB TO FIXED PANEL	6063-T5
19	–	AS RQD	SILICONE	DC-795 OR SIMILAR
20	SW-101	AS RQD	IMPACT GLAZING BEAD	6063-T6
21	SW-STL	1	3/8" X 3/4" FLAT BAR	STEEL
22	SW-AS	4	ASSEMBLY SCREWS	# 8 X 2 1/2" SMS.

APPROVED AS COMPLYING WITH THE
SOUTH FLORIDA BUILDING CODE
DATE March 17, 2000
BY Manuel Perez
PRODUCT CONTROL DIVISION
BUILDING CODE COMPLIANCE OFFICE
ACCEPTANCE NO. 99-0909.05

02-22-00
FRANCISCO HERNANDEZ
FLORIDA PE # 51393

Sunshine Windows Manufacturing, Inc.
1745 W. 33rd Place
Hialeah, Florida 33012
Ph: (305)364-9952
Fax:(305)828-5118

FRANCISCO HERNANDEZ P. E.
Structural Engineering
351 NW 82nd AVE #1118
Miami, Florida 33126
Phone (305) 266 8670
Fax (305) 266 3427

SERIES 1650 ALUMINUM HORIZONTAL SLIDING WINDOW (XO)

Drawn By: MH
Date: 8-16-99
Scale: 1/2"=1"
Revision:
Revision:

DRAWING NO.
HS99-04

SHEET
5 OF 5