MIAMI-DADE COUNTY, FLORIDA
METRO-DADE FLAGLER BUILDING

BUILDING CODE COMPLIANCE OFFICE
METRO-DADE FLAGLER BUILDING
140 WEST FLAGLER STREET, SUITE 1603
MIAMI, FLORIDA 33130-1563
(305) 375-2901 FAX (305) 375-2908

CONTRACTOR LICENSING SECTION
(305) 375-2527 FAX (305) 375-2558

CONTRACTOR ENFORCEMENT SECTION
(305) 375-2966 FAX (305) 375-2908

PRODUCT CONTROL DIVISION
(305) 375-2902 FAX (305) 372-6339

PRODUCT CONTROL NOTICE OF ACCEPTANCE

Brunswick Door Company
400 South Goolsby Boulevard
Deerfield Beach FL 33442

Your application for Product Approval of:
20 g Flush Outswing Commercial Steel Doors(w\16g frame)-Impact
under Chapter 8 of the Code of Miami-Dade County governing the use of Alternate Materials and Types of Construction, and completely described herein, has been recommended for acceptance by the Miami-Dade County Building Code Compliance Office (BCCO) under the conditions specified herein.

This approval shall not be valid after the expiration date stated below. BCCO reserves the right to secure this product or material at anytime from a jobsite or manufacturer's plant for quality control testing.
If this product or material fails to perform in the approved manner, BCCO may revoke, modify, or suspend the use of such product or material immediately. BCCO reserves the right to revoke this approval, if it is determined BCCO that this product or material fails to meet the requirements of the South Florida Building Code.

The expense of such testing will be incurred by the manufacturer.

Acceptance No.: 99-0920.05
Expires: 04/28/2003

Raul Rodriguez
Chief Product Control Division

THIS IS THE COVERSHEET, SEE ADDITIONAL PAGES FOR SPECIFIC AND GENERAL CONDITIONS

BUILDING CODE & PRODUCT REVIEW COMMITTEE

This application for Product Approval has been reviewed by the BCCO and approved by the Building Code and Product Review Committee to be used in Dade County, Florida under the conditions set forth above.

Francisco J. Quintana, R.A.
Director
Miami-Dade County
Building Code Compliance Office

Approved: 04/28/2000

Internet mail address: postmaster@buildingcodeonline.com **Homepage: http://www.buildingcodeonline.com**

Brunswick Door Company

ACCEPTANCE No.: 99-0920.05

APPROVED : APR 2 8 2000

EXPIRES : APR 2 8 2003

NOTICE OF ACCEPTANCE: SPECIFIC CONDITIONS

1. SCOPE

1.1 This approves a commercial steel door, as described in Section 2 of this Notice of Acceptance, designed to comply with the South Florida Building Code (SFBC), 1994 Edition for Miami-Dade County, for the locations where the pressure requirements, as determined by SFBC Chapter 23, do not exceed the Design Pressure Rating values indicated in the approved drawings.

2. PRODUCT DESCRIPTION

2.1 The **series 20 ga Flush (or Embossed) Outswing Commercial Steel Doors w\ 16ga Frames (Pair)- Large Missile Impact Resistant** and its components shall be constructed in strict compliance with the following documents: Drawing No **122-99**, titled "20ga Flush Steel Door", Sheets 1 through 6 of 6, prepared by EngCo, Inc, dated 09/08/99 and latest revised on 4-4-00, signed and sealed by Pedro De Figueiredo, P.E. , bearing the Miami-Dade County Product Control approval stamp with the Notice of Acceptance number and approval date by the Miami-Dade County Product Control Division. These documents shall hereinafter be referred to as the approved drawings.

3. LIMITATIONS

3.1 This approval applies to single unit applications of pair of doors and single door only, as shown in approved drawings. Single door units shall include all components described in the active leaf of this approval.

4. INSTALLATION

4.1 The 20ga commercial steel doors and its components shall be installed in strict compliance with the approved drawings.

4.2 Hurricane protection system (shutters): the installation of this unit **will not require** a hurricane protection system.

5. LABELING

5.1 Each unit shall bear a permanent label with the manufacturer's name or logo, city, state and following statement: "Miami-Dade County Product Control Approved".

6. BUILDING PERMIT REQUIREMENTS

6.1 Application for building permit shall be accompanied by copies of the following:

6.1.1 This Notice of Acceptance

6.1.2 Duplicate copies of the approved drawings, as identified in Section 2 of this Notice of Acceptance, clearly marked to show the components selected for the proposed installation.

6.1.3 Any other documents required by the Building Official or the South Florida Building Code (SFBC) in order to properly evaluate the installation of this system.

Ishaq I. Chanda

Ishaq I. Chanda, P.E. Product Control Examiner
Product Control Division

Brunswick Door Company

ACCEPTANCE No.: 99-0920.05

APPROVED : APR 2 8 2000

EXPIRES : APR 2 8 2003

NOTICE OF ACCEPTANCE: STANDARD CONDITIONS

1. Renewal of this Acceptance (approval) shall be considered after a renewal application has been filed and the original submitted documentation, including test supporting data, engineering documents, are no older than eight (8) years.

2. Any and all approved products shall be permanently labeled with the manufacturer's name, city, state, and the following statement: "Miami-Dade County Product Control Approved", or as specifically stated in the specific conditions of this Acceptance.

3. Renewals of Acceptance will not be considered if:
   a) There has been a change in the South Florida Building Code affecting the evaluation of this product and the product is not in compliance with the code changes;
   b) The product is no longer the same product (identical) as the one originally approved;
   c) If the Acceptance holder has not complied with all the requirements of this acceptance, including the correct installation of the product;
   d) The engineer who originally prepared, signed and sealed the required documentation initially submitted is no longer practicing the engineering profession.

4. Any revision or change in the materials, use, and/or manufacture of the product or process shall automatically be cause for termination of this Acceptance, unless prior written approval has been requested (through the filing of a revision application with appropriate fee) and granted by this office.

5. Any of the following shall also be grounds for removal of this Acceptance:
   a) Unsatisfactory performance of this product or process.
   b) Misuse of this Acceptance as an endorsement of any product, for sales, advertising or any other purpose.

6. The Notice of Acceptance number preceded by the words Miami-Dade County, Florida, and followed by the expiration date may be displayed in advertising literature. If any portion of the Notice of Acceptance is displayed, then it shall be done in its entirety.

7. A copy of this Acceptance as well as approved drawings and other documents, where it applies, shall be provided to the user by the manufacturer or its distributors and shall be available for inspection at the job site at all time. The engineer need not reseal the copies.

8. Failure to comply with any section of this Acceptance shall be cause for termination and removal of Acceptance.

9. This Notice of Acceptance consists of pages 1, 2 and this last page 3.

Ishaq I. Chanda

Ishaq I. Chanda, P. E., Product Control Examiner
Product Control Division

END OF THIS ACCEPTANCE

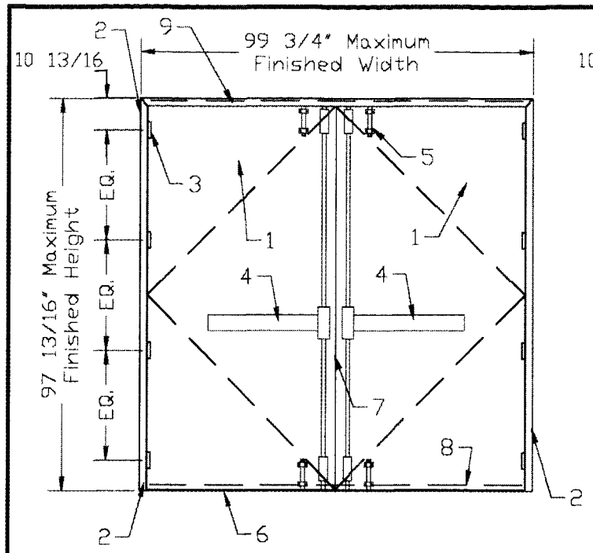

PAIR DOOR
DESIGN PRESSURE:
Positive= +60
Negative= -65

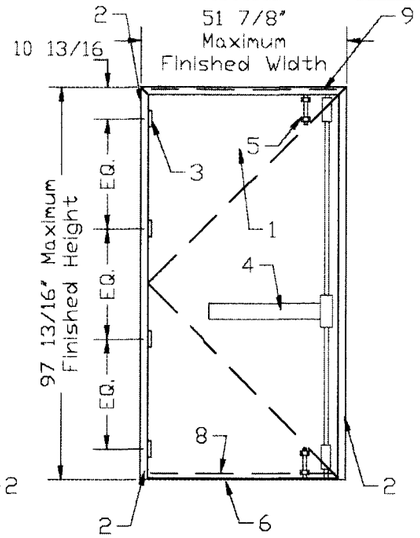

SINGLE DOOR
DESIGN PRESSURE:
Positive= +60
Negative= -65

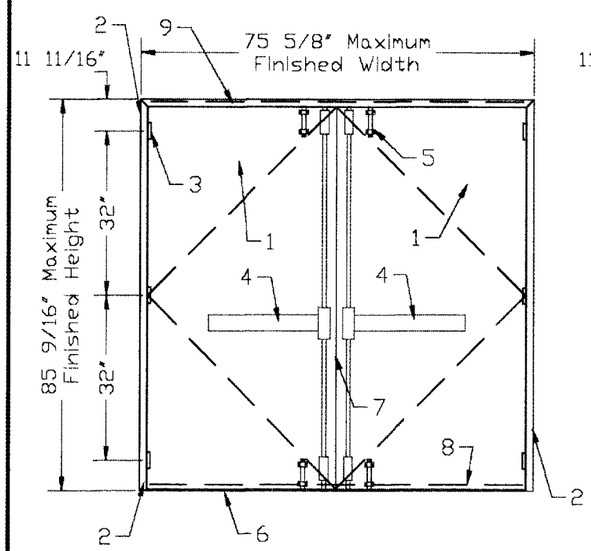

PAIR DOOR
DESIGN PRESSURE:
Positive= +60
Negative= -85

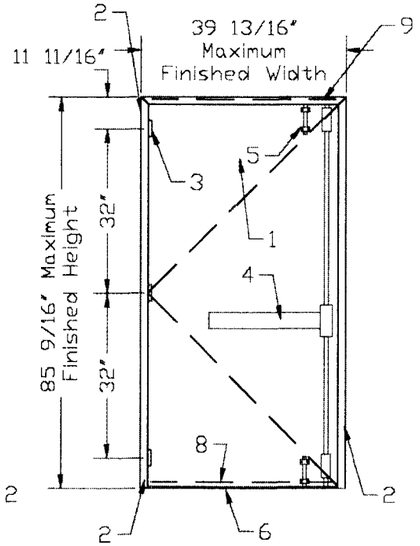

SINGLE DOOR
DESIGN PRESSURE:
Positive= +60
Negative= -85

GENERAL NOTES:

1- CODE: This product has been tested and designed in accordance with the South Florida Building Code – Dade County 94 edition.

2- DEFINITION: This product is an 20 ga.(min) Out-Swing Commercial Single or Double Steel Door, designed and erected to provide protection from Hurricane force winds within the designed allowable pressures and limitations stated in this approval.

3- IDENTIFICATION: A permanent legible decal shall be placed at readily visible location at inside the frame jamb and at the door slab edge, reading the following:

Brunswick Door Company
Deerfield Beach, Florida
Dade County Product
Control Approved

4- MATERIAL: 16ga Frame and 20ga Door flush or embossed are made of cold rolled steel, commercial quality with a minimum yield stress of 44.0 Ksi.

5- FASTENERS: Assembly screws and anchors shall be as specified at current set of drawings. Installation and loads as per manufacturer specifications.

6- SEALANTS: GE Window & Door 100% silicone Rubber Sealant #GE012A to be applied on frame perimeter, exterior side and leaf perimeter.

HARDWARE SCHEDULE

MARK	DESCRIPTION
1	20 Ga 1 3/4" – 47 5/8"x 95 1/8" Steel door leaf. Flush or Embossed
2	16 Ga 2 5/8"x 5 7/8"(min) Steel Frame – Jambs and Header
3	(8) for FH=97 7/8" and (6) for FH=85 1/2" Steel Full Mortise Hinges, 4 1/2"x 4 1/2" PBB, Inc – Part# PB81 – US 26D finish.
4	(2) PRIMARY LOCKS – Panic Device Cal Royal Products Inc. # 8000V series connected to the active and inactive doors.
5	(4) SECONDARY LOCKS – Taco Model # UL-453 HD surface bolts two per door leaf top and bottom.
6	Pemko 177AV Saddle Threshold – 7/8" highx 5" wide with a 1/4" SiliconeSeal insert.
7	(2) Pemko overlapping astragal #357 1 3/4"x1/8" USP.
8	Pemko #307AV sweep
9	Pemko #346C x 100" AL rain cap.

INDEX

SHEET	DESCRIPTION
1	GENERAL NOTES, HARDWARE SCHEDULE AND DESIGN PRESSURE
2	PERIMETER FRAME DETAIL
3	DOOR DETAIL
4	ELEVATION ANCHORAGE LAY-OUT
5	ANCHORAGE SECTION DETAIL
6	WEATHER SEAL DETAILS

APPROVED AS COMPLYING WITH THE
SOUTH FLORIDA BUILDING CODE
DATE April 28, 2000
BY Ishaq I. Chanda
PRODUCT CONTROL DIVISION
BUILDING CODE COMPLIANCE OFFICE
ACCEPTANCE NO. 99-0920.05

EngCo, Inc.
Engineering Services
CA# 8116
9957 NW 7th St.
Plantation - Florida - 33324
Tel.: 954 424-4064

MAR 22 2000
Pedro De Figueiredo
PE 52809

20ga Flush Steel Door

BRUNSWICK DOOR CO.
400 South Goolsby Blvd.
Deerfield Bch. - Florida - 33443
Tel.: 954 427-1700

Date: 9/8/99 | Scale: none | Designed by: PPMF

Rev. #	Description	Date
1	Add single door, Change Notes, 16ga frame	3/21/00

Drawing Number 122-99

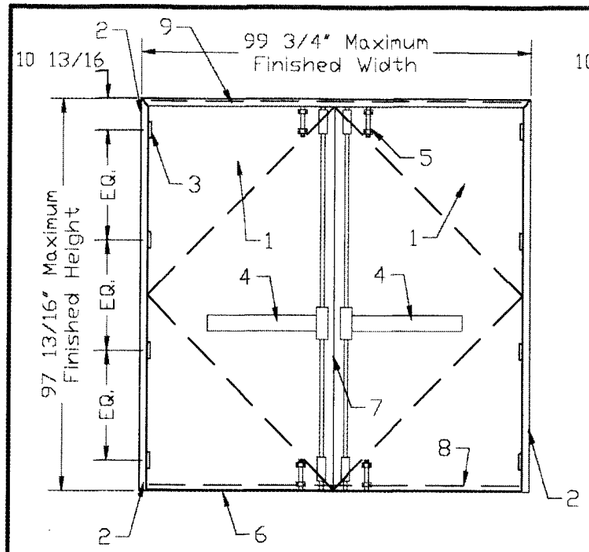

PAIR DOOR
DESIGN PRESSURE:
Positive= +60
Negative= -65

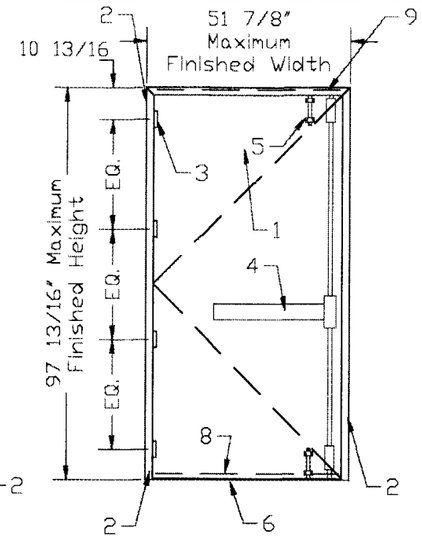

SINGLE DOOR
DESIGN PRESSURE:
Positive= +60
Negative= -65

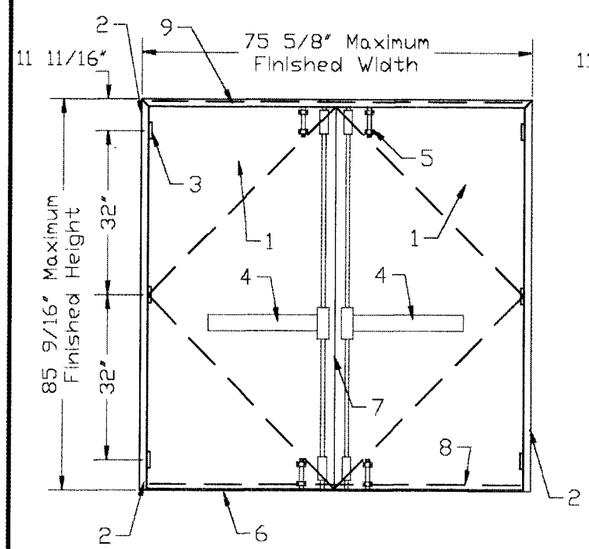

PAIR DOOR
DESIGN PRESSURE:
Positive= +60
Negative= -85

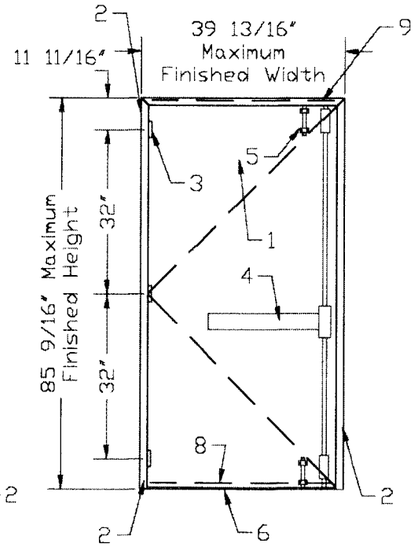

SINGLE DOOR
DESIGN PRESSURE:
Positive= +60
Negative= -85

GENERAL NOTES:

1- CODE: This product has been tested and designed in accordance with the South Florida Building Code – Dade County 94 edition.

2- DEFINITION: This product is an 20 ga.(min) Out-Swing Commercial Single or Double Steel Door, designed and erected to provide protection from Hurricane force winds within the designed allowable pressures and limitations stated in this approval.

3- IDENTIFICATION: A permanent legible decal shall be placed at readily visible location at inside the frame jamb and at the door slab edge, reading the following:

Brunswick Door Company
Deerfield Beach, Florida
Dade County Product
Control Approved

4- MATERIAL: 16ga Frame and 20ga Door flush or embossed are made of cold rolled steel, commercial quality with a minimum yield stress of 44.0 Ksi.

5- FASTENERS: Assembly screws and anchors shall be as specified at current set of drawings. Installation and loads as per manufacturer specifications.

6- SEALANTS: GE Window & Door 100% silicone Rubber Sealant #GE012A to be applied on frame perimeter, exterior side and leaf perimeter.

HARDWARE SCHEDULE

MARK	DESCRIPTION
1	20 Ga 1 3/4" – 47 5/8"x 95 1/8" Steel door leaf. Flush or Embossed
2	16 Ga 2 5/8"x 5 7/8"(min) Steel Frame – Jambs and Header
3	(8) for FH=97 7/8" and (6) for FH=85 1/2" Steel Full Mortise Hinges, 4 1/2"x 4 1/2" PBB, Inc – Part# PB81 – US 26D finish.
4	(2) PRIMARY LOCKS – Panic Device Cal Royal Products Inc. # 8000V series connected to the active and inactive doors.
5	(4) SECONDARY LOCKS – Taco Model # UL-453 HD surface bolts two per door leaf top and bottom.
6	Pemko 177AV Saddle Threshold – 7/8" highx 5" wide with a 1/4" SiliconeSeal insert.
7	(2) Pemko overlapping astragal #357 1 3/4"x1/8" USP.
8	Pemko #307AV sweep
9	Pemko #346C x 100" AL rain cap.

INDEX

SHEET	DESCRIPTION
1	GENERAL NOTES, HARDWARE SCHEDULE AND DESIGN PRESSURE
2	PERIMETER FRAME DETAIL
3	DOOR DETAIL
4	ELEVATION ANCHORAGE LAY-OUT
5	ANCHORAGE SECTION DETAIL
6	WEATHER SEAL DETAILS

APPROVED AS COMPLYING WITH THE
SOUTH FLORIDA BUILDING CODE
DATE April 28, 2000
BY Ishaq I. Chanda
PRODUCT CONTROL DIVISION
BUILDING CODE COMPLIANCE OFFICE
ACCEPTANCE NO. 99-0920.05

EngCo, Inc.
Engineering Services
CA# 6116
9957 NW 7th St.
Plantation - Florida - 33324
Tel.: 954 424-4064

MAR 22 2000
Pedro De Figueiredo
PE 52509

20ga Flush Steel Door

BRUNSWICK DOOR CO.
400 South Goolsby Blvd.
Deerfield Bch. - Florida - 33443
Tel.: 954 427-1700

Date: 9/6/99 | Scale: none | Designed by: PPMF

Rev. #	Description	Date
1	Add single door, Change Notes, 16ga frame	3/21/00

SHEET 1 of 6

Drawing Number 122-99

CORNER ASSEMBLY

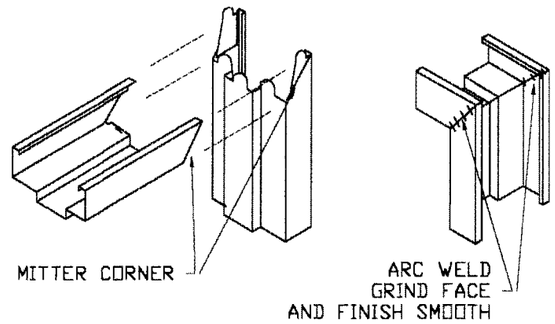

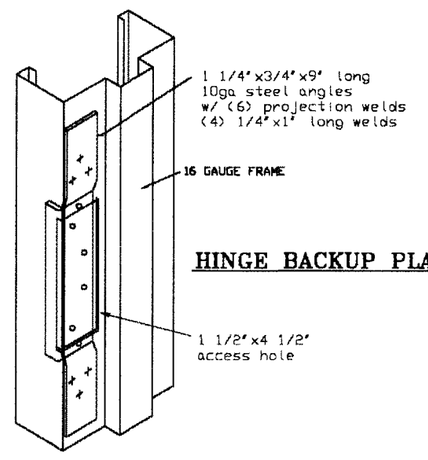

HINGE BACKUP PLATE

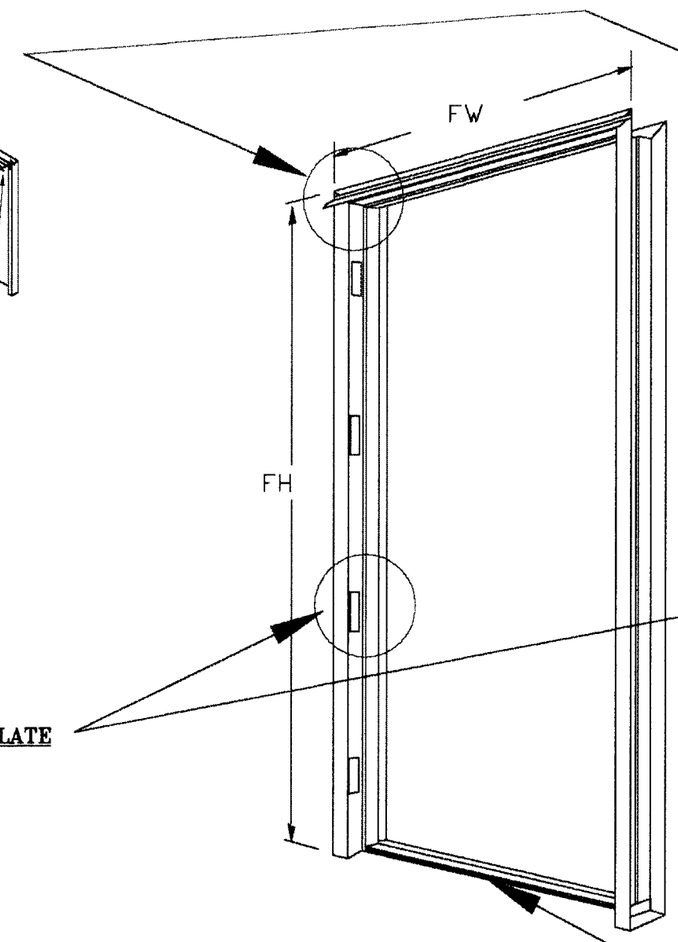

PERIMETER FRAME - SINGLE DOOR

16 Ga Commercial Quality
Cold Rolled Steel
Fy=44 Ksi

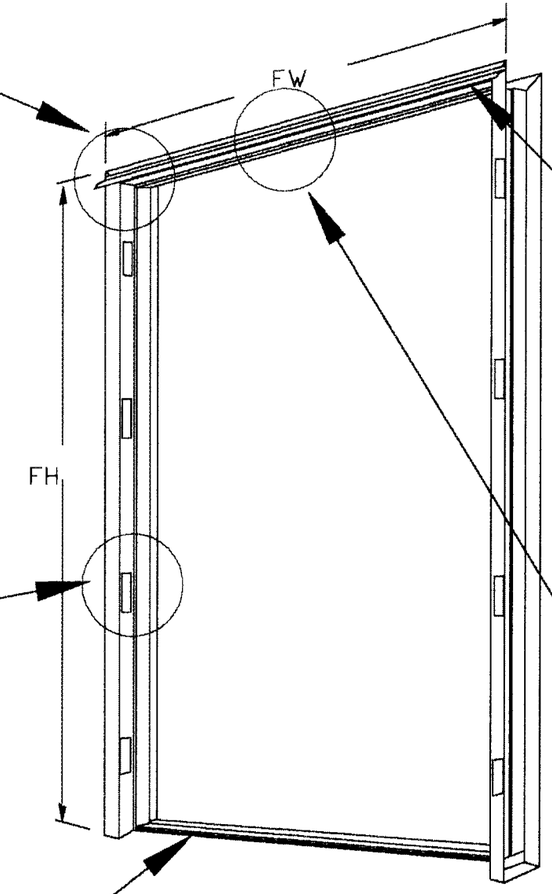

PEMKO 177AV THRESHOLD

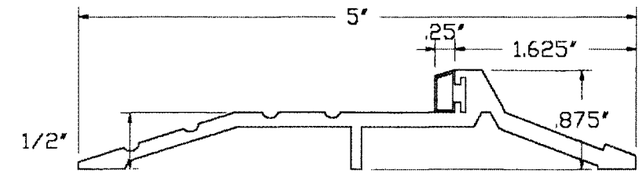

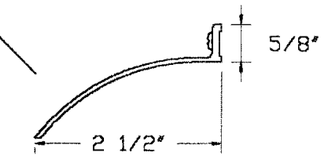

OVERHEAD RAIN DRIP

Pemko #346C-AL

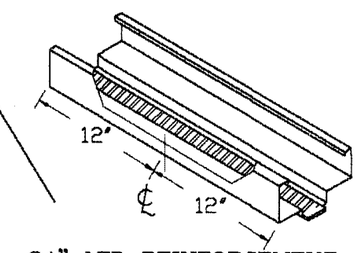

24" MID REINFORCEMENT

1 3/8"x24"x1/8" steel
reinforcement plate welded to
frame with (7) 3/16" point weld.

PERIMETER FRAME - DOUBLE DOOR

16 Ga Commercial Quality
Cold Rolled Steel
Fy=44 Ksi

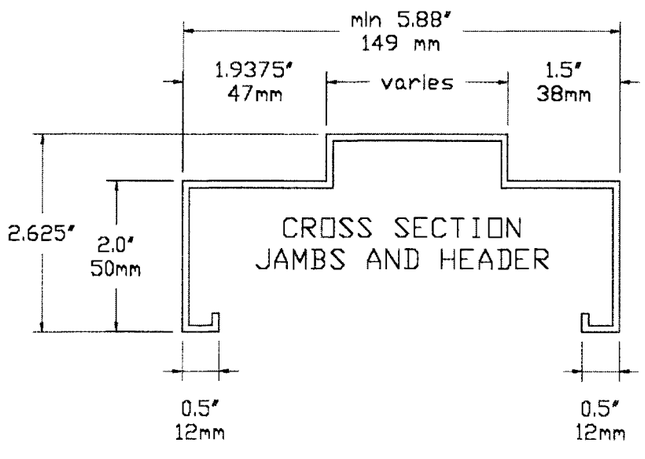

APPROVED AS COMPLYING WITH THE
SOUTH FLORIDA BUILDING CODE
DATE April 28, 2000
BY Ishaq I. Chanda
PRODUCT CONTROL DIVISION
BUILDING CODE COMPLIANCE OFFICE
ACCEPTANCE NO. 99-0920.05

EngCo, Inc.
Engineering Services
CA# 6116
9957 NW 7th St.
Plantation - Florida - 33324
Tel.: 954 424-4064

MAR 2 2 2000
Pedro De Figueiredo
PE 52809

20ga Flush Steel Door

BRUNSWICK DOOR CO.
400 South Goolsby Blvd.
Deerfield Bch. - Florida - 33443
Tel.: 954 427-1700

Date: 8/8/99 | Scale: none | Designed by: PPMF

Rev. #	Description	Date
1	Replace 18ga with 16ga frame - per code	3/21/00

SHEET 2 of 6

Drawing Number 122-99

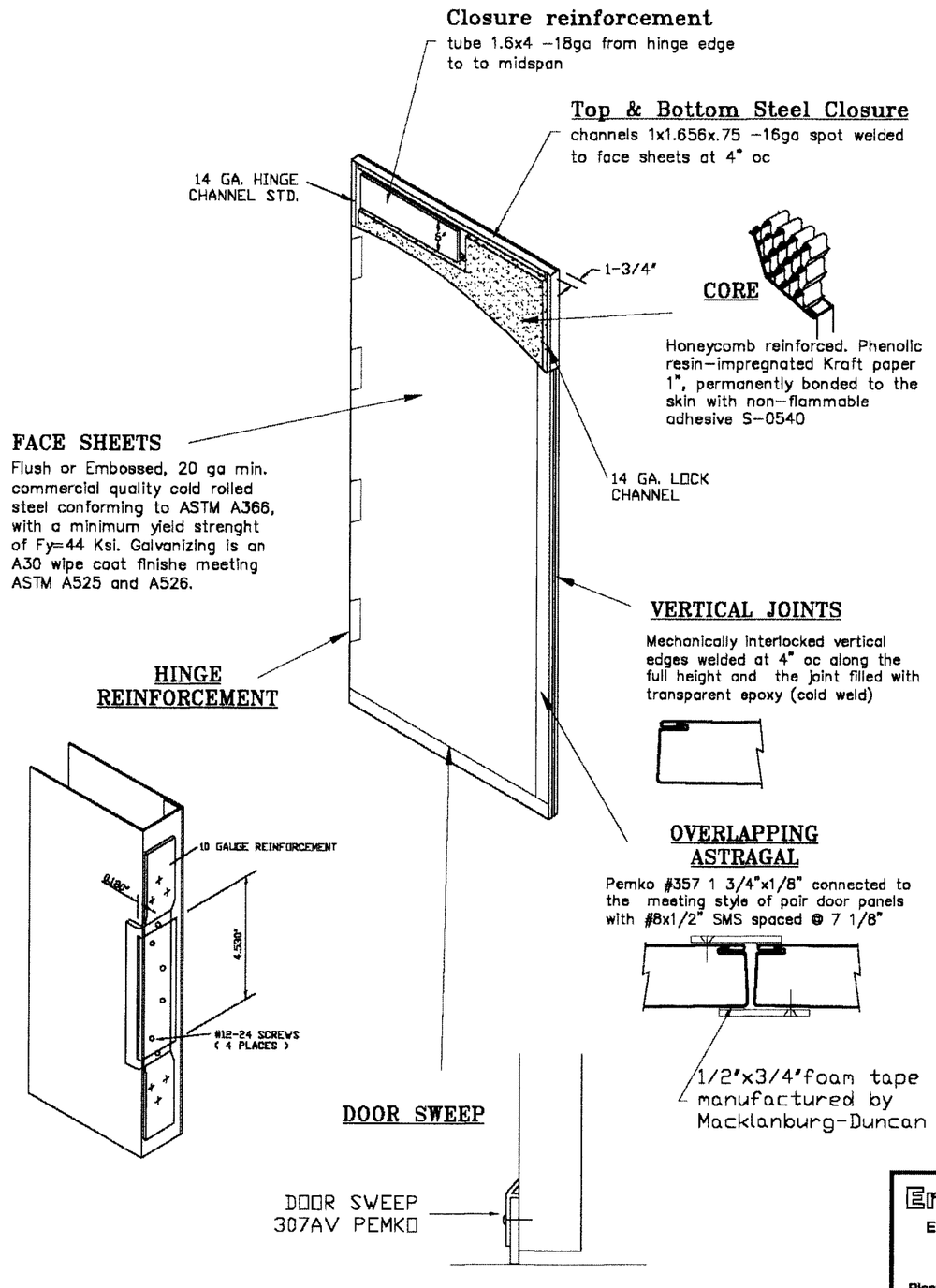

TYPICAL REINFORCEMENTS

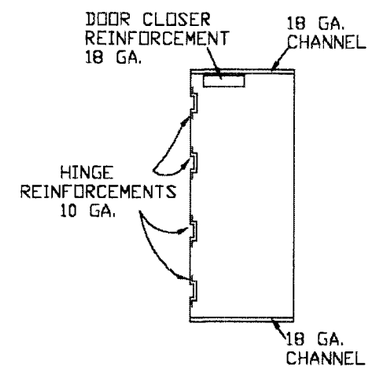

OPTIONAL STIFFENERS

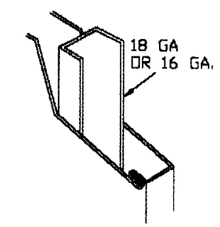

APPROVED AS COMPLYING WITH THE SOUTH FLORIDA BUILDING CODE
DATE April 28, 2000
BY Ishaq I. Chanda
PRODUCT CONTROL DIVISION
BUILDING CODE COMPLIANCE OFFICE
ACCEPTANCE NO. 99-0920.05

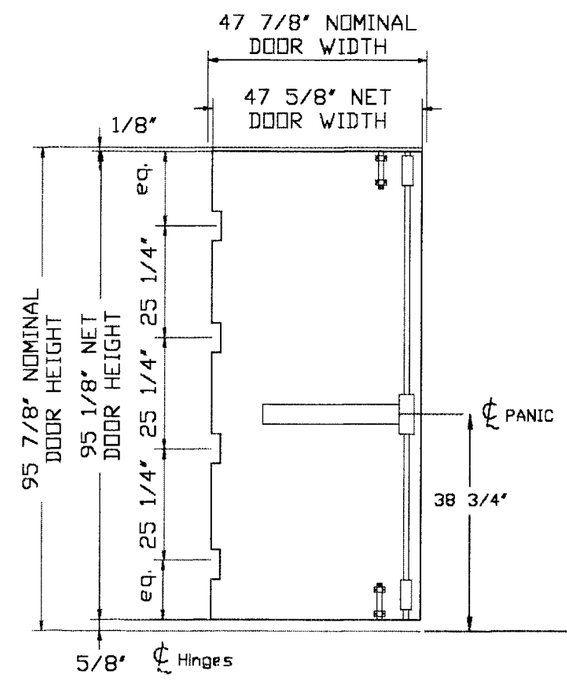

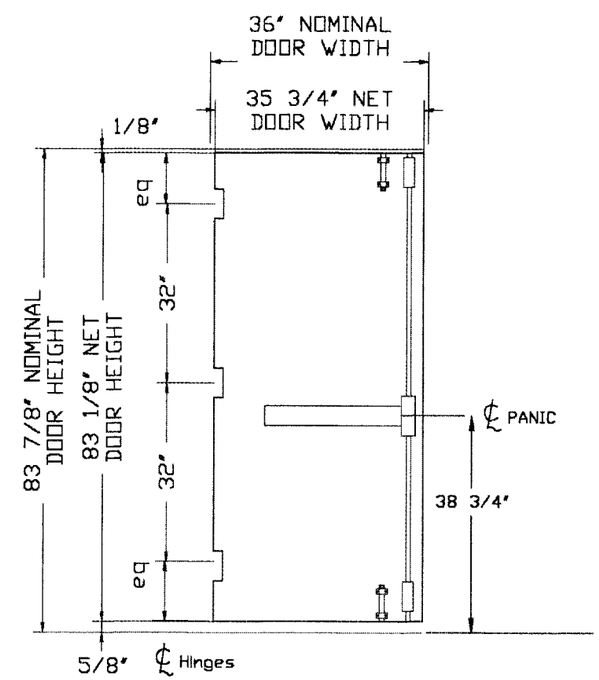

EngCo, Inc.
Engineering Services
CA# 8119
9957 NW 7th St.
Plantation - Florida - 33324
Tel.: 954 424-4064

MAR 2 2 2000
Pedro De Figueiredo
PE 52609

20ga Flush Steel Door

BRUNSWICK DOOR CO.
400 South Goolsby Blvd.
Deerfield Bch. - Florida - 33443
Tel.: 954 427-1700

Date: 9/8/99 | Scale: none | Designed by: PPMF

Rev. #	Description	Date
1	Deleted additional reinforcements	3/21/00

SHEET 3 of 6

Drawing Number 122–99

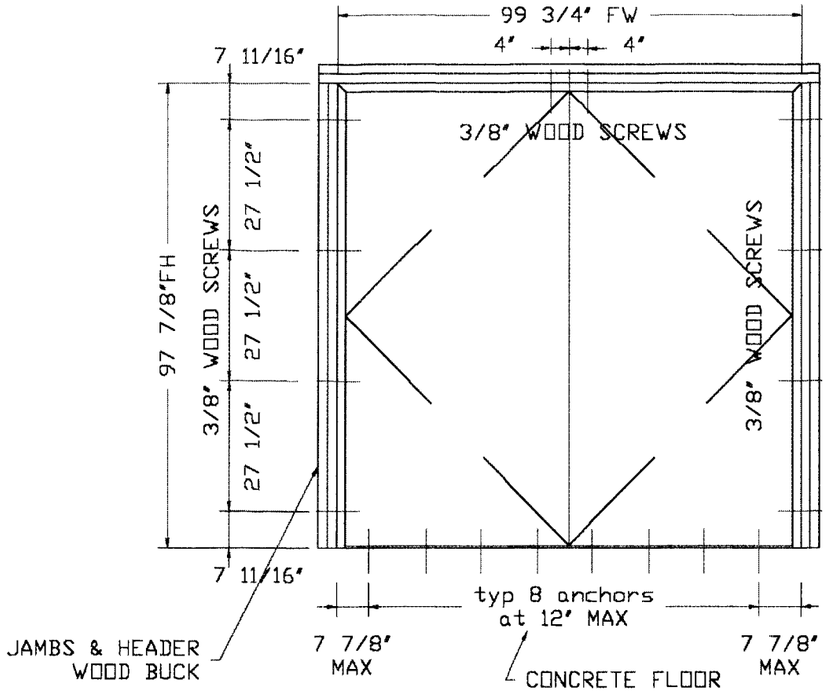

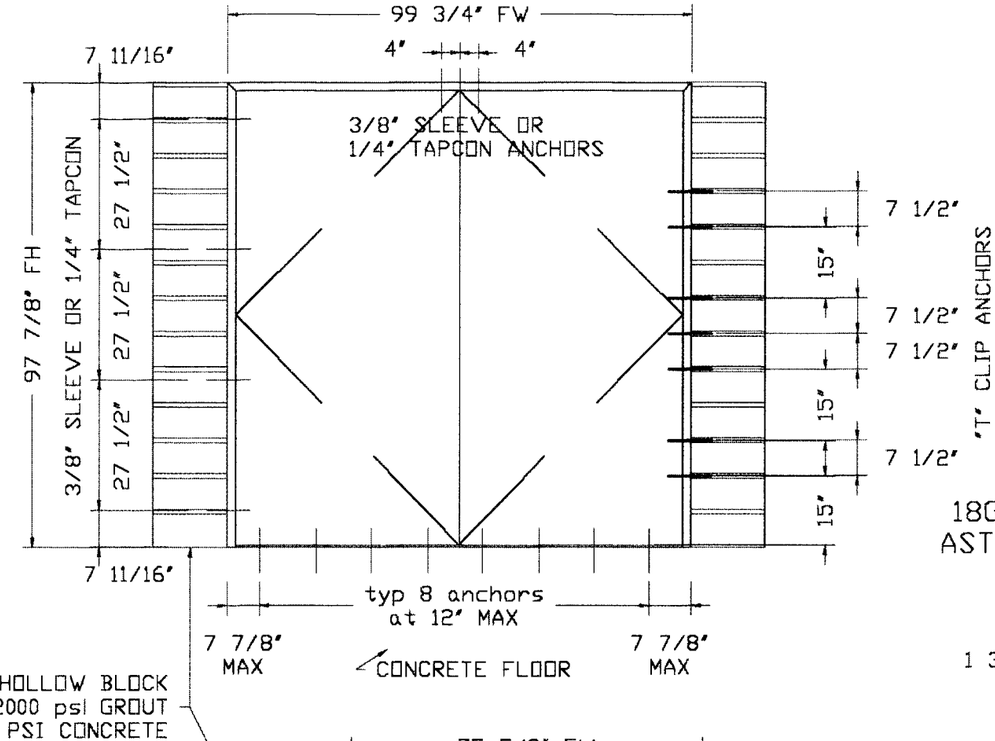

APPROVED AS COMPLYING WITH THE
SOUTH FLORIDA BUILDING CODE
DATE April 28, 2000
BY Ishaq I. Chanda
PRODUCT CONTROL DIVISION
BUILDING CODE COMPLIANCE OFFICE
ACCEPTANCE NO. 99-0920.05

18GA STEEL "T" ANCHOR
ASTM A366 - FY=44 KSI

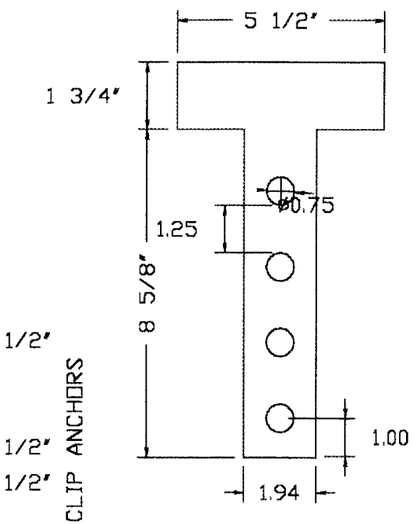

ANCHORAGE LAYOUT

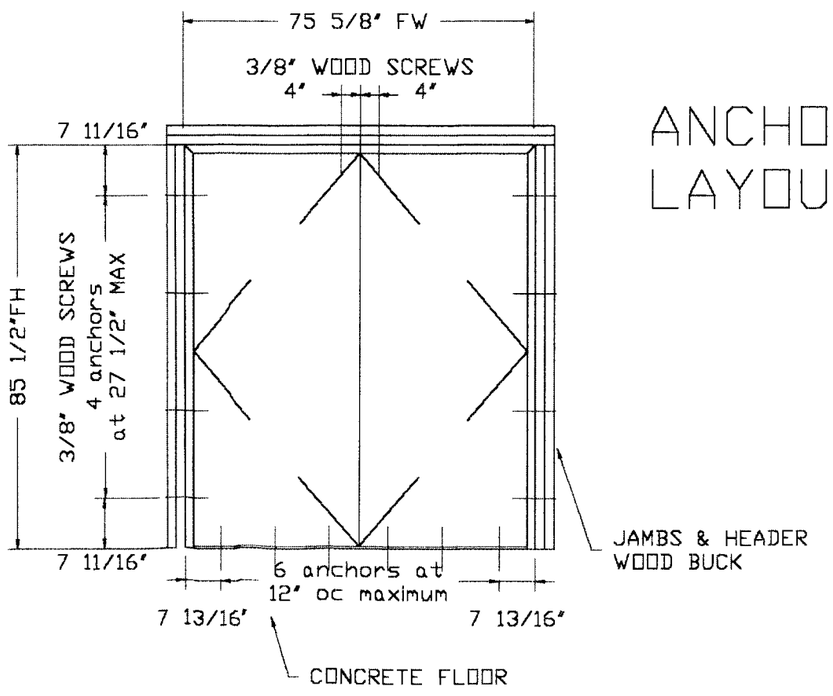

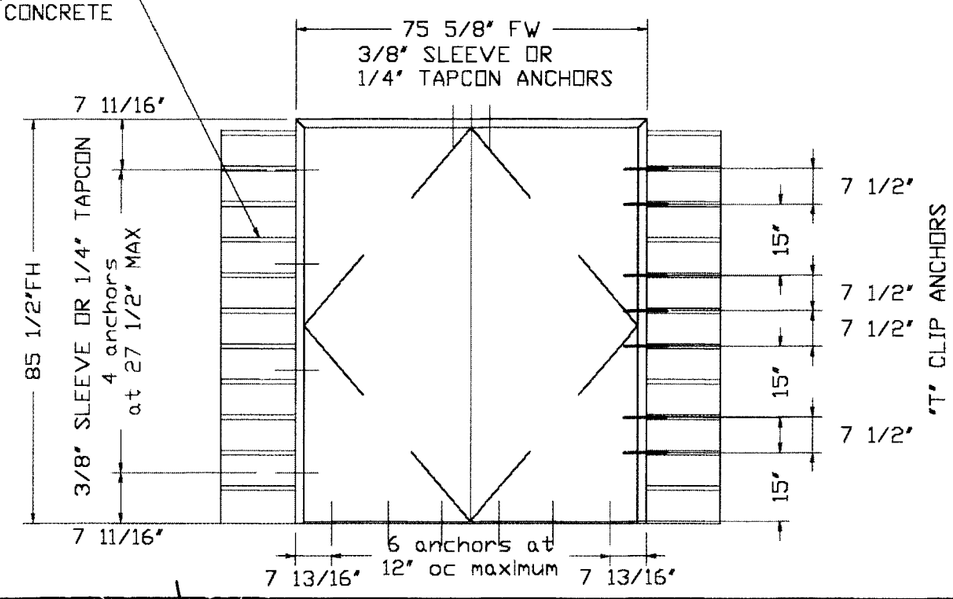

EngCo, Inc.
Engineering Services
APR 04 2000
Pedro De Figueiredo
PE 52609

20ga Flush Steel Door

BRUNSWICK DOOR CO.
400 South Goolsby Blvd.
Deerfield Bch. - Florida - 33443
Tel.: 954 427-1700

Date: 9/8/99 | Scale: none | Designed by: PPMF

Rev. #	Description	Date
1	Anchorage spacing adjusted	3/21/00
1	Anchorage spacing adjusted	4/4/00

SHEET 4 of 6

Drawing Number 122-99

HEADER ANCHORAGE 3/8" WOOD SCREWS

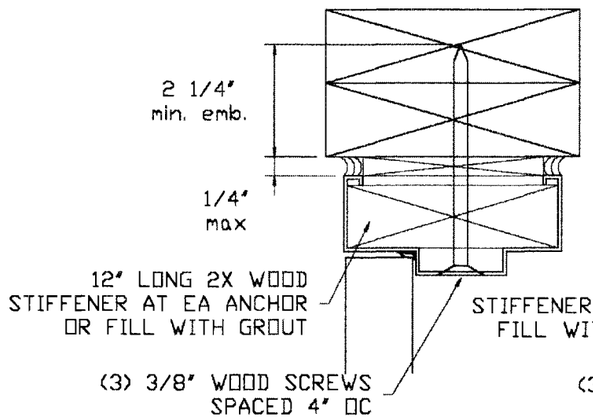

HEADER ANCHORAGE 1/4" TAPCONS

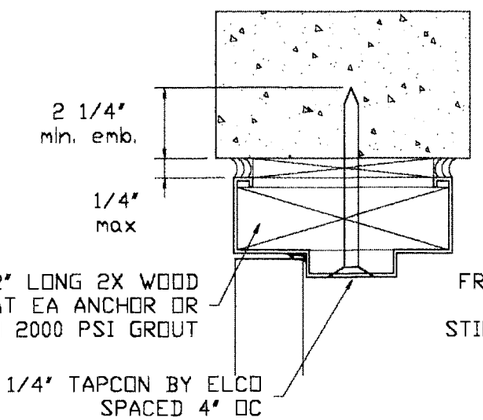

HEADER ANCHORAGE 3/8" HILTI SLEEVE ANCHORS

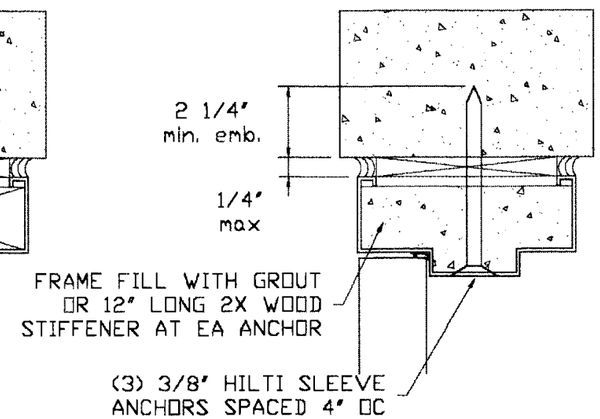

JAMB ANCHORAGE 3/8" HILTI SLEEVE ANCHORS

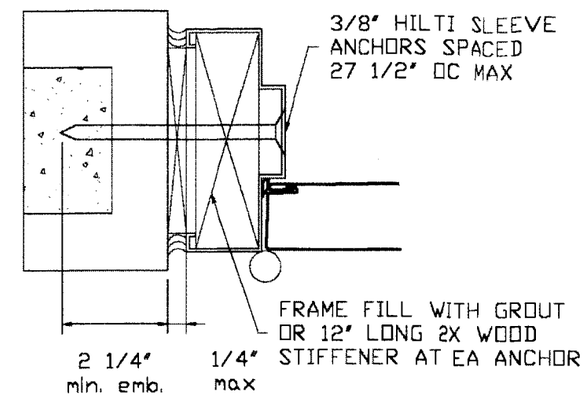

NOTE: Attachments of sub-bucks shall be designed by the Architect of Record or Engineer of Record and must be in compliance with the South Florida Building Code

JAMB ANCHORAGE 3/8" WOOD SCREWS

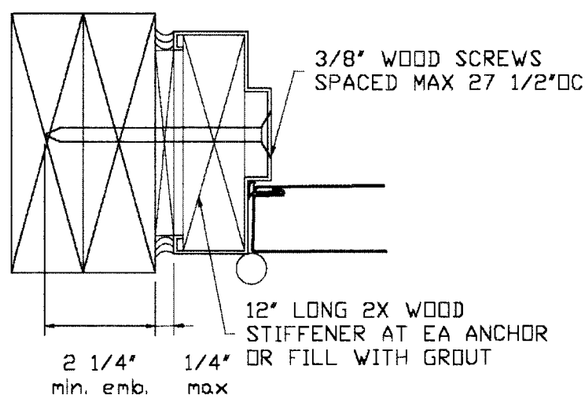

JAMB ANCHORAGE 1/4" TAPCON ANCHORS

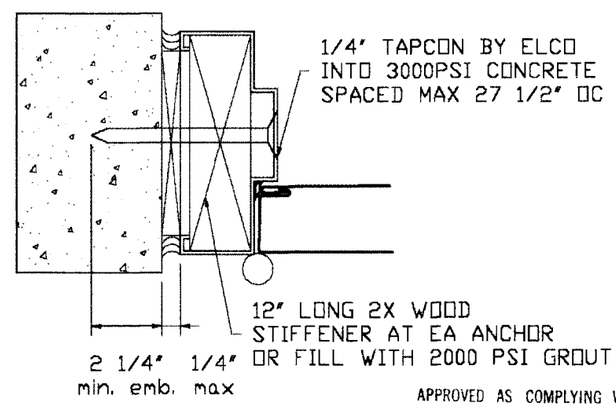

JAMB ANCHORAGE "T" ANCHORS

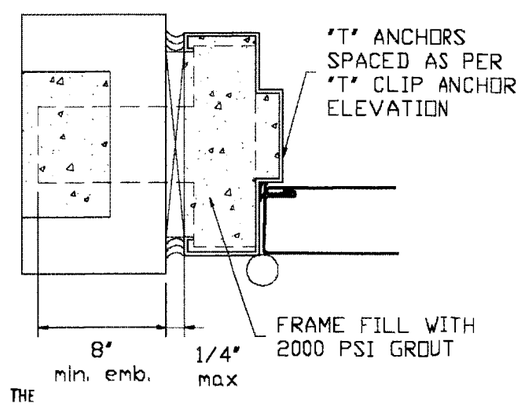

THRESHOLD ANCHORAGE 1/4" TAPCONS SCREWS

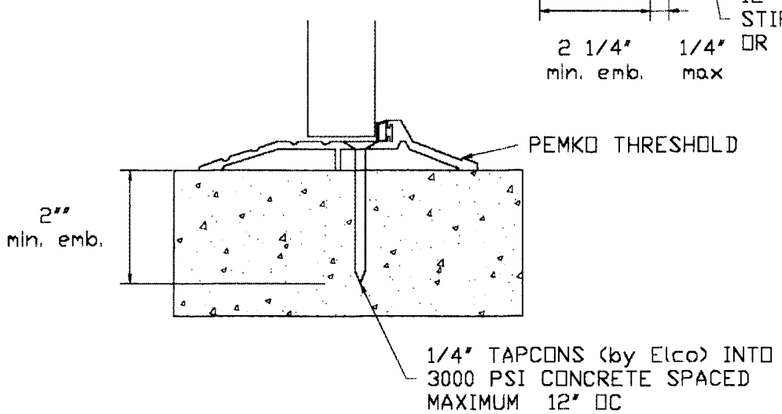

APPROVED AS COMPLYING WITH THE
SOUTH FLORIDA BUILDING CODE
DATE April 28, 2000
BY Ishaq I. Chanda
PRODUCT CONTROL DIVISION
BUILDING CODE COMPLIANCE OFFICE
ACCEPTANCE NO. 99-0920.05

EngCo, Inc.
Engineering Services

MAR 22 2000
Pedro De Figueiredo
PE 52509

20ga Flush Steel Door

BRUNSWICK DOOR CO.
400 South Goolsby Blvd.
Deerfield Bch. - Florida - 33443
Tel.: 954 427-1700

Date: 9/8/99 | Scale: none | Designed by: PPMF

Rev. #	Description	Date
1	ANCHORAGE EMBEDMENT	3/21/00

SHEET 5 of 6

Drawing Number 122-99

WEATHER STRIPPING

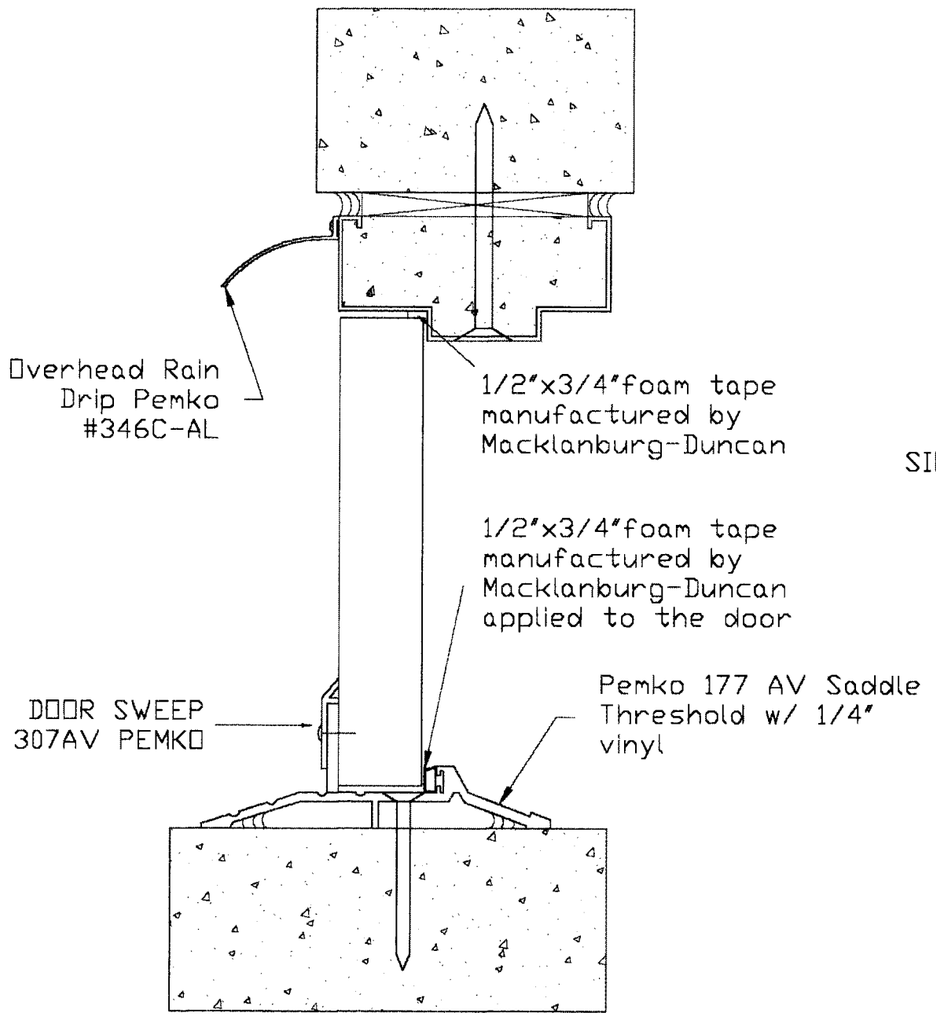

VERTICAL SECTION

HORIZONTAL SECTION

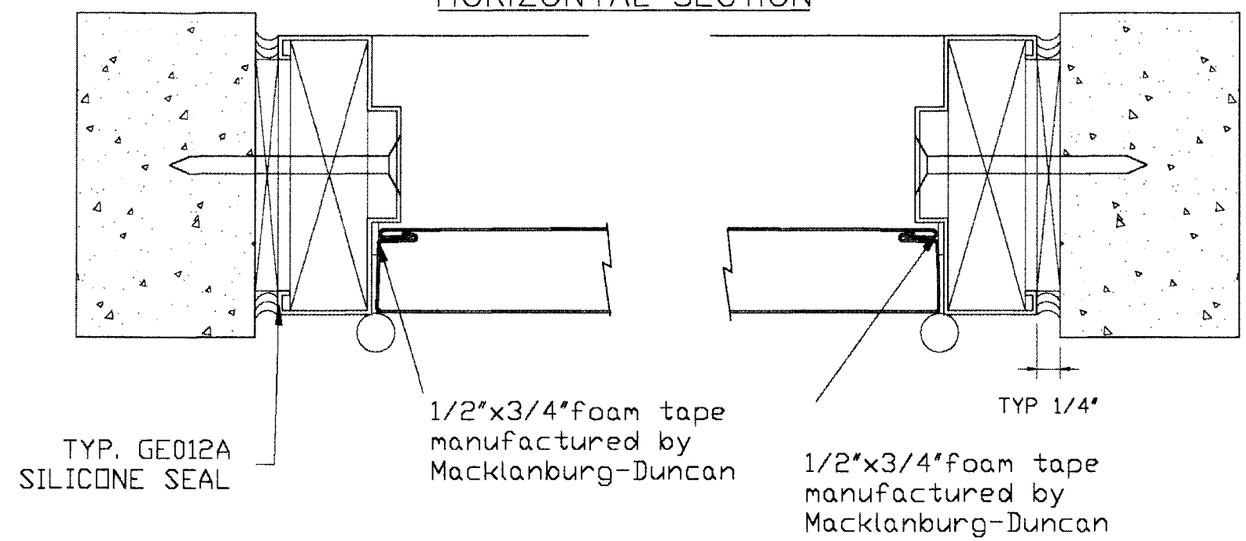

MEETING STILE

Pemko #357 1 3/4"x1/8" connected to the meeting style of pair door panels with #8x1/2" SMS spaced @ 7 1/8"

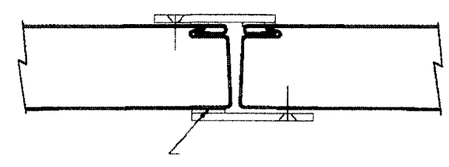

1/2"x3/4"foam tape manufactured by Macklanburg-Duncan double on interior, single on exterior

APPROVED AS COMPLYING WITH THE SOUTH FLORIDA BUILDING CODE
DATE April 28, 2000
BY Ishaq I. Chanda
PRODUCT CONTROL DIVISION
BUILDING CODE COMPLIANCE OFFICE
ACCEPTANCE NO. 99-0920.05

EngCo, Inc. Engineering Services CA# 6116 9957 NW 7th St. Plantation - Florida - 33324 Tel.: 954 424-4064	MAR 22 2000 Pedro De Figueiredo PE 52509	20ga Flush Steel Door	Date: 9/8/99	Scale: none	Designed by: PPMF	SHEET 6 of 6
		BRUNSWICK DOOR CO. 400 South Goolsby Blvd. Deerfield Bch. - Florida - 33443 Tel.: 954 427-1700	Rev. # 1 — Description: Add grout at header section — Date		Drawing Number 122-99