MIAMI-DADE

MIAMI-DADE COUNTY, FLORIDA
METRO-DADE FLAGLER BUILDING

BUILDING CODE COMPLIANCE OFFICE
METRO-DADE FLAGLER BUILDING
140 WEST FLAGLER STREET, SUITE 1603
MIAMI, FLORIDA 33130-1563
(305) 375-2901 FAX (305) 375-2908

CONTRACTOR LICENSING SECTION
(305) 375-2527 FAX (305) 375-2558

CONTRACTOR ENFORCEMENT SECTION
(305) 375-2966 FAX (305) 375-2908

PRODUCT CONTROL DIVISION
(305) 375-2902 FAX (305) 372-6339

PRODUCT CONTROL NOTICE OF ACCEPTANCE

Select Manufacturing
1450 Albert Street
Youngstown OH 44505

Your application for Product Approval of:
"Hurricame Series 7000" - Window Screen
under Chapter 8 of the Code of Miami-Dade County governing the use of Alternate Materials and Types of Construction, and completely described herein, has been recommended for acceptance by the Miami-Dade County Building Code Compliance Office (BCCO) under the conditions specified herein.

This approval shall not be valid after the expiration date stated below. BCCO reserves the right to secure this product or material at anytime from a jobsite or manufacturer's plant for quality control testing.
If this product or material fails to perform in the approved manner, BCCO may revoke, modify, or suspend the use of such product or material immediately. BCCO reserves the right to revoke this approval, if it is determined BCCO that this product or material fails to meet the requirements of the South Florida Building Code.

The expense of such testing will be incurred by the manufacturer.

Acceptance No.: 99-1001.03

Expires: 07/20/2003

Raul Rodriguez
Chief Product Control Division

THIS IS THE COVERSHEET, SEE ADDITIONAL PAGES FOR SPECIFIC AND GENERAL CONDITIONS

BUILDING CODE & PRODUCT REVIEW COMMITTEE

This application for Product Approval has been reviewed by the BCCO and approved by the Building Code and Product Review Committee to be used in Dade County, Florida under the conditions set forth above.

Francisco J. Quintana, R.A.
Director
Miami-Dade County
Building Code Compliance Office

Approved: 07/20/2000

Internet mail address: postmaster@buildingcodeonline.com **Homepage: http://www.buildingcodeonline.com**

NOTICE OF ACCEPTANCE: SPECIFIC CONDITIONS

1. SCOPE

This approves a "Hurricane Series 7000" Window Screen, as described in Section 2 of this Notice of Acceptance, designed to comply with the South Florida Building Code, 1994 Edition for Miami-Dade County, for the locations where the pressure requirements, as determined by SFBC Chapter 23, do not exceed the Design Pressure Rating values indicated in the approved drawings.

2. PRODUCT DESCRIPTION

This "Hurricane Series 7000" Window Screen and its components shall be constructed in strict compliance with the following documents: Drawing No. S99-62, titled "Hurricane Series 7000 Window Screen", prepared by RW Building Consultants, Inc., dated September 24, 1999, last revision #3 dated June 26, 2000, sheets 1 through 3 of 3, signed and sealed by Mark Fetherman, P.E., bearing the Miami-Dade County Product Control Approval stamp with the Notice of Acceptance number and approval date by the Miami-Dade County Product Control Division. These documents shall hereinafter be referred to as the approved drawings.

3. LIMITATIONS

All permanent set components, included but not limited to embedded anchor bolts, threaded cones, metal shields, headers and sills, must be protected against corrosion, contamination and damage at all times.

4. INSTALLATION

This "Hurricane Series 7000" Window Screen and its components shall be installed in strict compliance with the approved drawings.

5. LABELING

Each unit shall bear a permanent label with the manufacturer's name or logo, city, state and the following statement: "Miami-Dade County Product Control Approved".

6. BUILDING PERMIT REQUIREMENTS

6.1 Application for building permit shall be accompanied by copies of the following:

- **6.1.1** This Notice of Acceptance.
- **6.1.2** Duplicate copies of the approved drawings, as identified in Section 2 of this Notice of Acceptance, clearly marked to show the components selected for the proposed installation.
- **6.1.3** Any other documents required by the Building Official or the South Florida Building Code (SFBC) in order to properly evaluate the installation of this system.

Helmy A. Makar, P. E. - Product Control Examiner
Product Control Division

Select Manufacturing

ACCEPTANCE No. : 99-1001.03

APPROVED : 07/20/2000

EXPIRES : 07/20/2003

NOTICE OF ACCEPTANCE: STANDARD CONDITIONS

1. Renewal of this Acceptance (approval) shall be considered after a renewal application has been filed and the original submitted documents, including test-supporting data, engineering documents, are no older than eight (8) years.

2. Any and all approved products shall be permanently labeled with the manufacturer's name, city, state, and the following statement: "Miami-Dade County Product Control Approved", or as specifically stated in the specific conditions of this Acceptance.

3. Renewals of Acceptance will not be considered if:
   a. There has been a change in the South Florida Building Code affecting the evaluation of this product and the product is not in compliance with the code changes.
   b. The product is no longer the same product (identical) as the one originally approved.
   c. If the Acceptance holder has not complied with all the requirements of this acceptance, including the correct installation of the product.
   d. The engineer, who originally prepared, signed and sealed the required documentation initially submitted, is no longer practicing the engineering profession.

4. Any revision or change in the materials, use, and/or manufacture of the product or process shall automatically be cause for termination of this Acceptance, unless prior written approval has been requested (through the filing of a revision application with appropriate fee) and granted by this office.

5. Any of the following shall also be grounds for removal of this Acceptance:
   a. Unsatisfactory performance of this product or process.
   b. Misuse of this Acceptance as an endorsement of any product, for sales, advertising or any other purposes.

6. The Notice of Acceptance number preceded by the words Miami-Dade County, Florida, and followed by the expiration date may be displayed in advertising literature. If any portion of the Notice of Acceptance is displayed, then it shall be done in its entirety.

7. A copy of this Acceptance as well as approved drawings and other documents, where it applies, shall be provided to the user by the manufacturer or its distributors and shall be available for inspection at the job site at all time. The engineer needs not reseal the copies.

8. Failure to comply with any section of this Acceptance shall be cause for termination and removal of Acceptance.

9. This Notice of Acceptance consists of pages 1, 2 and this last page 3.

END OF THIS ACCEPTANCE

Helmy A. Makar, P.E. -Product Control Examiner
Product Control Division

SELECT MANUFACTURING

HURRICANE SERIES 7000 - WINDOW SCREEN

GENERAL NOTES

1. THIS PRODUCT IS DESIGNED TO MEET THE SOUTH FLORIDA BUILDING CODE 1994 EDITION FOR MIAMI–DADE COUNTY.
2. SYSTEM MOUNTS DIRECTLY TO THE MASONRY OPENING BY MEANS OF AN ALUMINUM "L" ANGLE (0.050" min. thk.)
3. PRODUCT ANCHORS SHALL BE AS LISTED AND SPACED AS SHOWN ON DETAILS. ANCHOR EMBEDMENT TO BASE MATERIAL SHALL BE BEYOND WALL DRESSING OR STUCCO.
4. THIS PRODUCT IS IMPACT RESISTANT.
5. DESIGN PRESSURE RATING SHALL BE AS FOLLOWS:
   POSITIVE 55.6 PSF NEGATIVE 55.6 PSF
6. MINIMUM SEPARATION FROM GLASS IS 3.063".

IMPACT RESISTANT SCREEN / SHUTTER

FRAME CONSTRUCTION:

EXTRUDED ALUMINUM FRAME. THE CORNERS ARE MITERED, BUTTED, WELDED, AND GROUND FLUSH.

PANEL CONSTRUCTION:

THE SCREEN PANEL IS 304 HIGH TENSILE STAINLESS STEEL. THE STRANDS ARE .028" IN DIAMETER AND ARE 12 STRANDS BY 12 STRANDS PER SQUARE INCH. THE SCREEN IS ATTACHED TO AN EXTRUDED ALUMINUM PANEL FRAME WITH MITER CUT CORNERS, BUTTED, WELDED AND GROUND FLUSH.

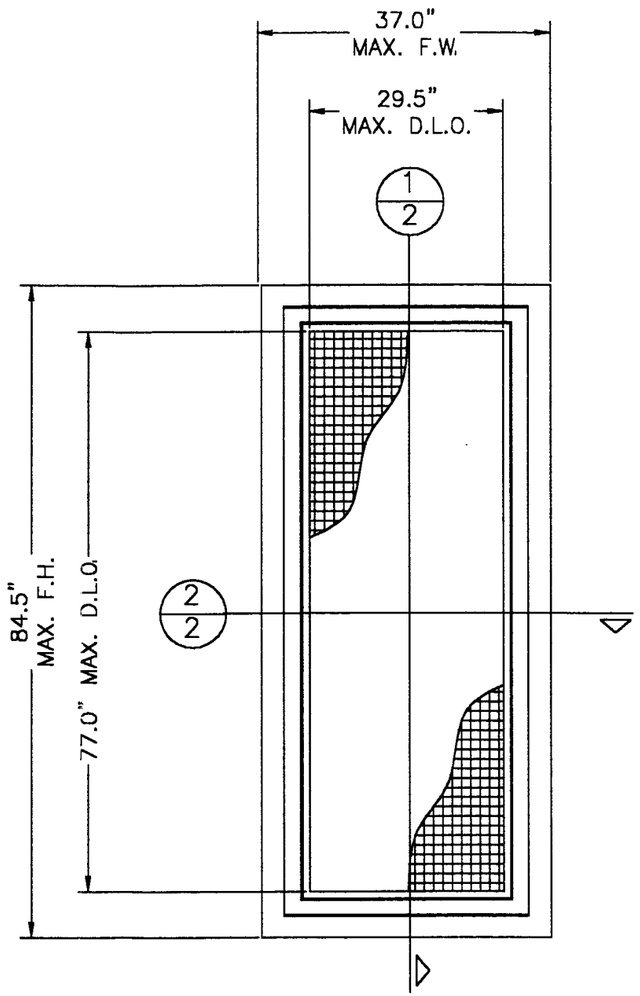

TABLE OF CONTENTS

SHEET #	DESCRIPTION
1	GENERAL NOTES & TYPICAL ELEVATIONS
2	HORIZONTAL & VERTICAL CROSS SECTIONS
3	ANCHOR LOCATIONS, BILL OF MATERIALS & COMPONENTS

Mark C. Fetherman
State Of Florida Professional Engineer #40116
September 14, 2000

APPROVED AS COMPLYING WITH THE SOUTH FLORIDA BUILDING CODE
DATE 07/20/2000
BY [signature]
PRODUCT CONTROL DIVISION
BUILDING CODE COMPLIANCE OFFICE
ACCEPTANCE NO. 99-1001.03

Select Manufacturing
1450 Albert Street
Youngstown, Ohio 44505
PH 330.965.9910

PRODUCT: HURRICANE SERIES 7000 WINDOW SCREEN

PART OR ASSEMBLY: GENERAL NOTES AND ELEVATION

REVISIONS

NO.	DATE		BY
3	6/26/00	GENERAL REVISION	TJH
2	4/25/00	GENERAL REVISION	TJH
1	3/20/00	GENERAL REVISION	TJH

RW BUILDING CONSULTANTS, INC.
813.684.3831

DATE: 09/24/99
SCALE: N.T.S.
DWG. BY: RWBC
CHK. BY: –
DRAWING NO.: S99–62
SHEET 1 OF 3

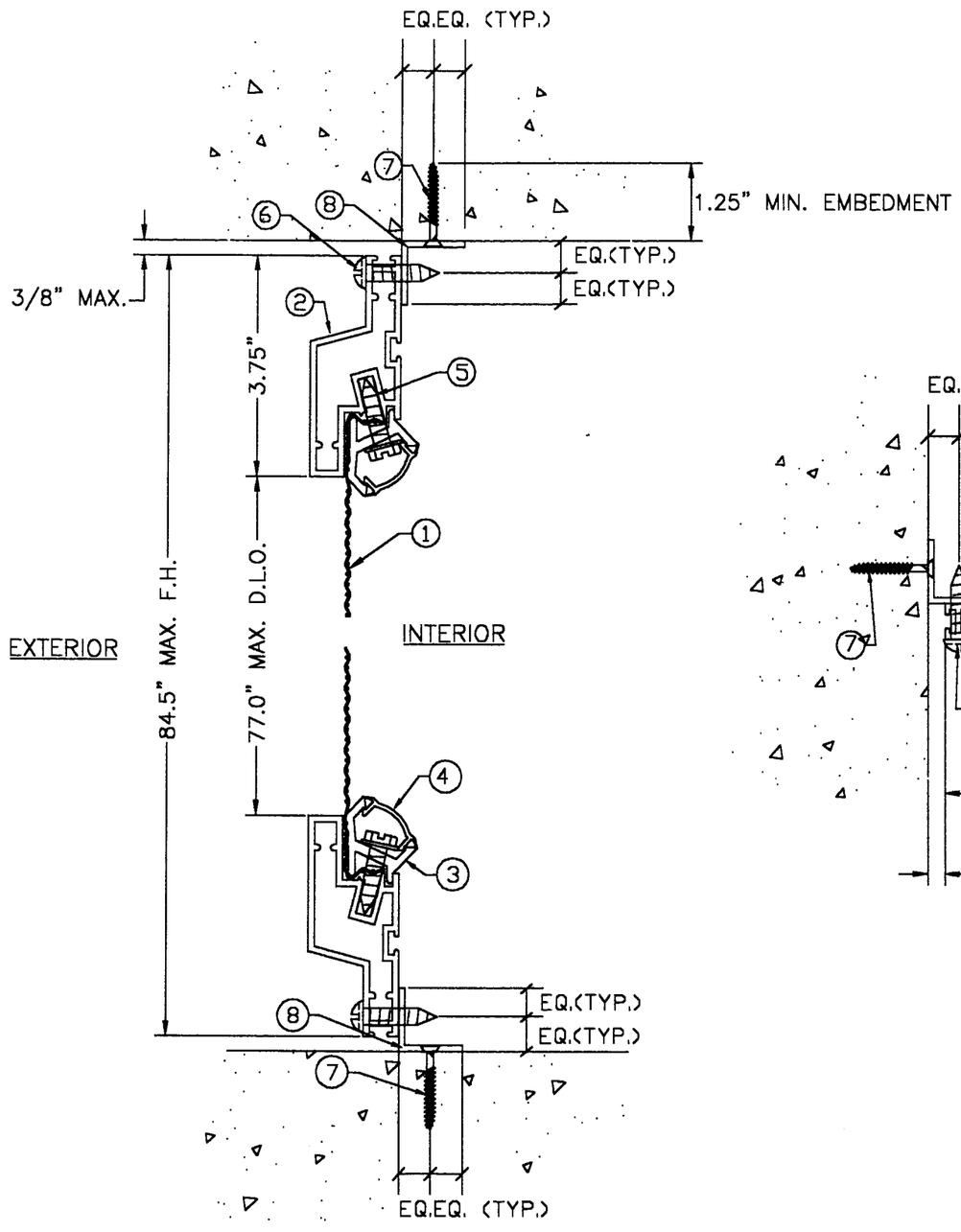

1/2 VERTICAL CROSS SECTION

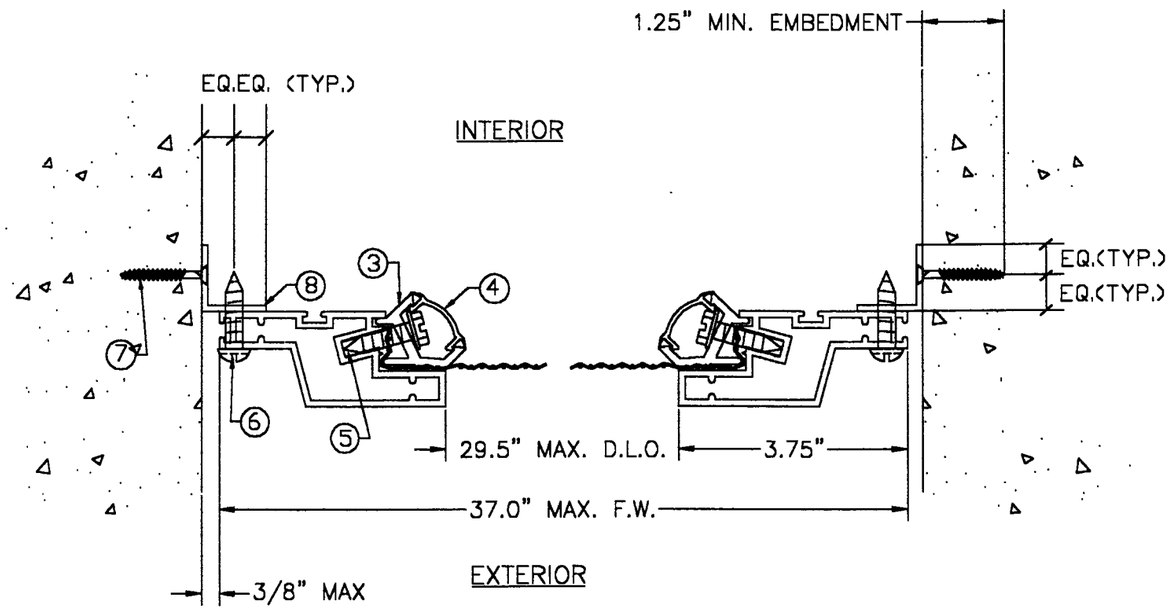

2/2 HORIZONTAL CROSS SECTION

Mark C. Fetherman
State Of Florida Professional Engineer #40116
September 14, 2000

APPROVED AS COMPLYING WITH THE SOUTH FLORIDA BUILDING CODE
DATE 07/20/2000
BY
PRODUCT CONTROL DIVISION
BUILDING CODE COMPLIANCE OFFICE
ACCEPTANCE NO. 99-1001.03

Select Manufacturing
1450 Albert Street
Youngstown, Ohio 44505
PH 330.965.9910

PRODUCT: HURRICANE SERIES 7000 WINDOW SCREEN

PART OR ASSEMBLY: VERT. CROSS SECTION / HORT. CROSS SECTION

REVISIONS

NO.	DATE		BY
3	6/26/00	GENERAL REVISION	TJH
2	4/25/00	GENERAL REVISION	TJH
1	3/20/00	GENERAL REVISION	TJH

RW BUILDING CONSULTANTS, INC.
813.684.3831

DATE: 09/24/99
SCALE: N.T.S.
DWG. BY: RWBC
CHK. BY: –
DRAWING NO.: S99–62
SHEET 2 OF 3

BILL OF MATERIALS

ITEM	DESCRIPTION	MATERIAL
1	WIRE MESH	304 STAINLESS STEEL
2	SCREEN MAIN FRAME	6063-T5 ALUMINUM
3	RETAINER	6063-T5 ALUMINUM
4	RETAINER CAP	RIGID PVC
5	#12 X 1" HEX HEAD SIMS	(SEE NOTE 3)
6	#8 X 1/2" TEK SCREW	
7	3/16" TAPCON ANCHOR	ELCO OR ITW
8	1" X 1" X 0.05" ANGLE	6063-T5 ALUMINUM
–		
–		
–		
–		

Select Manufacturing
1450 Albert Street
Youngstown, Ohio 44505
PH 330.965.9910

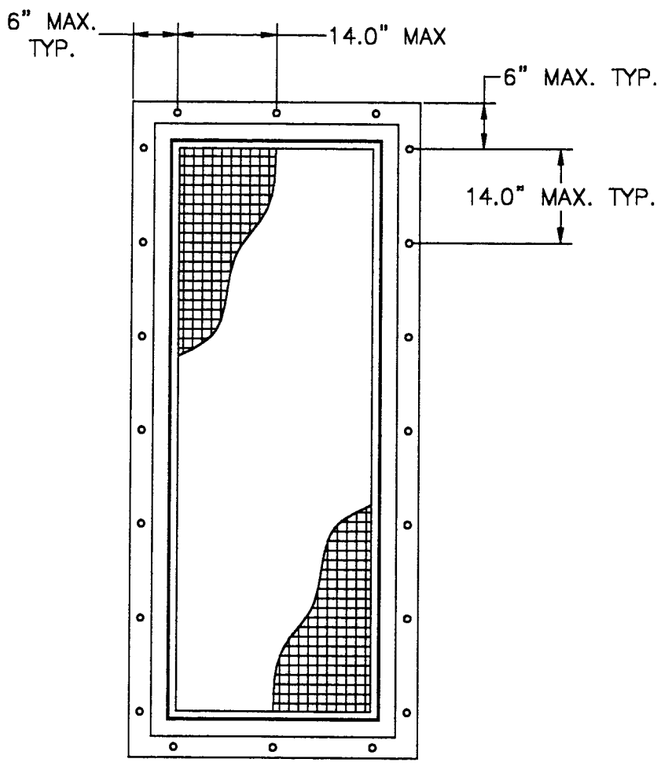

SCREEN TO FRAME ATTACHMENT

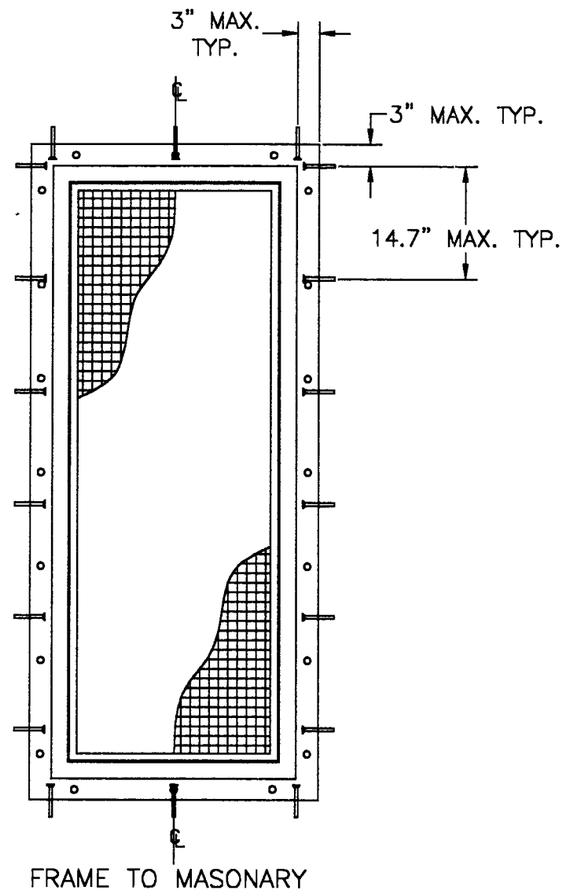

FRAME TO MASONARY ATTACHMENT

NOTE 1:
USE #8 x 1/2" TEK SCREWS TO SECURE SCREEN TO ANGLE BRACKET.

NOTE 2:
USE 3/16" TAPCON ANCHOR WITH MIN. 1.25 EMBEDMENT TO SECURE MOUNT ANGLE TO MASONARY.

NOTE 3:
2" FROM EACH CORNER & 4" ON CENTER CONTINUOUS AROUND THE PERIMETER.

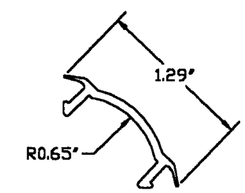

4 RETAINER CAP

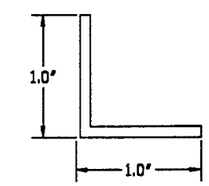

8 EXT. ANGLE

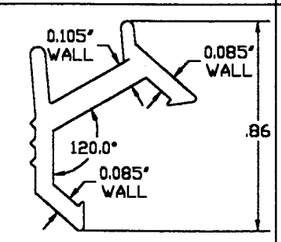

3 RETAINER

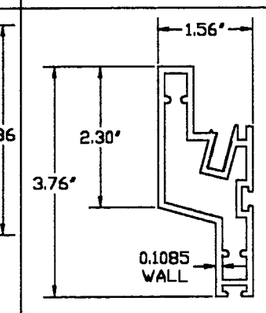

2 SCREEN MAIN FRAME

Mark C. Fetherman
State Of Florida Professional Engineer #40116
September 14, 2000

APPROVED AS COMPLYING WITH THE SOUTH FLORIDA BUILDING CODE
DATE 07/20/2000
BY
PRODUCT CONTROL DIVISION
BUILDING CODE COMPLIANCE OFFICE
ACCEPTANCE NO. 99-1001.03

PRODUCT: HURRICANE SERIES 7000 WINDOW SCREEN

PART OR ASSEMBLY: ANCHOR LOCATIONS, BILL OF MATERIALS & COMPONENTS

NO.	DATE		BY
3	6/26/00	GENERAL REVISION	TJH
2	4/25/00	GENERAL REVISION	TJH
1	3/20/00	GENERAL REVISION	TJH

REVISIONS

RW BUILDING CONSULTANTS, INC.
813.684.3831

DATE: 09/24/99
SCALE: N.T.S.
DWG. BY: RWBC
CHK. BY: –
DRAWING NO.: S99-62
SHEET 3 OF 3