MIAMI-DADE COUNTY, FLORIDA
METRO-DADE FLAGLER BUILDING

**BUILDING CODE COMPLIANCE OFFICE**
METRO-DADE FLAGLER BUILDING
140 WEST FLAGLER STREET, SUITE 1603
MIAMI, FLORIDA 33130-1563
(305) 375-2901 FAX (305) 375-2908

**CONTRACTOR LICENSING SECTION**
(305) 375-2527 FAX (305) 375-2558

**CONTRACTOR ENFORCEMENT SECTION**
(305) 375-2966 FAX (305) 375-2908

**PRODUCT CONTROL DIVISION**
(305) 375-2902 FAX (305) 372-6339

# PRODUCT CONTROL NOTICE OF ACCEPTANCE

**The See Thru Shutter Company**
**10460 NW 50th St.**
**Sunrise FL 33351**

Your application for Product Approval of:
***0.063" Perforated and Solid Aluminum Storm Panels Shutter***
under Chapter 8 of the Code of Miami-Dade County governing the use of Alternate Materials and Types of Construction, and completely described herein, has been recommended for acceptance by the Miami-Dade County Building Code Compliance Office (BCCO) under the conditions specified herein.

This approval shall not be valid after the expiration date stated below. BCCO reserves the right to secure this product or material at anytime from a jobsite or manufacturer's plant for quality control testing.
If this product or material fails to perform in the approved manner, BCCO may revoke, modify, or suspend the use of such product or material immediately. BCCO reserves the right to revoke this approval, if it is determined BCCO that this product or material fails to meet the requirements of the South Florida Building Code.

The expense of such testing will be incurred by the manufacturer.

**Acceptance No.: 99-1108.04**

**Expires: 02/04/2003**

Raul Rodriguez
Chief Product Control Division

**THIS IS THE COVERSHEET, SEE ADDITIONAL PAGES FOR SPECIFIC AND GENERAL CONDITIONS**

**BUILDING CODE & PRODUCT REVIEW COMMITTEE**

This application for Product Approval has been reviewed by the BCCO and approved by the Building Code and Product Review Committee to be used in Dade County, Florida under the conditions set forth above.

Francisco J. Quintana, R.A.
Director
Miami-Dade County
Building Code Compliance Office

**Approved: 02/04/2000**



**Internet mail address: postmaster@buildingcodeonline.com** **Homepage: http://www.buildingcodeonline.com**

**The See Thru Shutter Company, Inc.**

**ACCEPTANCE No. :** 99-1108.04

**APPROVED :** FEB 0 4 2000

**EXPIRES :** FEB 0 4 2003

## NOTICE OF ACCEPTANCE: SPECIFIC CONDITIONS

**1. SCOPE**

This approves a 0.063" aluminum storm panels shutter, as described in Section 2 of this Notice of Acceptance, designed to comply with the South Florida Building Code, 1994 Edition for Miami-Dade County, for the locations where the pressure requirements, as determined by SFBC Chapter 23, do not exceed the Design Pressure Rating values indicated in the approved drawings.

**2. PRODUCT DESCRIPTION**

This 0.063" aluminum storm panels shutter and its components shall be constructed in strict compliance with the following documents: Drawing No. 99-340, titled " 0.063" Perforated and solid Aluminum Storm Panels", prepared by Knezevich & Associates, Inc., dated October 19, 1999, last revision # 2 dated January 6, 2000, sheets 1 through 6 of 6, bearing the Miami-Dade County Product Control Approval stamp with the Notice of Acceptance number and approval date by the Miami-Dade County Product Control Division. These documents shall hereinafter be referred to as the approved drawings.

**3. LIMITATIONS**

All permanent set components, included but not limited to embedded anchor bolts, threaded cones, metal shields, headers and sills, must be protected against corrosion, contamination and damage at all times.

**4. INSTALLATION**

This 0.063" aluminum storm panels shutter and its components shall be installed in strict compliance with the approved drawings.

**5. LABELING**

Each panel shall bear a permanent label with the manufacturer's name or logo, city, state and the following statement: "Miami-Dade County Product Control Approved".

**6. BUILDING PERMIT REQUIREMENTS**

**6.1** Application for building permit shall be accompanied by copies of the following:

**6.1.1** This Notice of Acceptance.

**6.1.2** Duplicate copies of the approved drawings, as identified in Section 2 of this Notice of Acceptance, clearly marked to show the components selected for the proposed installation.

**6.1.3** Any other documents required by the Building Official or the South Florida Building Code (SFBC) in order to properly evaluate the installation of this system.

Helmy A. Makar

Helmy A. Makar, P.E.- Product Control Examiner
Product Control Division

**The See Thru Shutter Company, Inc.**

**ACCEPTANCE No. : 99-1108.04**

**APPROVED : FEB 0 4 2000**

**EXPIRES : FEB 0 4 2003**

## NOTICE OF ACCEPTANCE: STANDARD CONDITIONS

1 Renewal of this Acceptance (approval) shall be considered after a renewal application has been filed and the original submitted documents, including test-supporting data, engineering documents, are no older than eight (8) years.

2. Any and all approved products shall be permanently labeled with the manufacturer's name, city, state, and the following statement: "Miami-Dade County Product Control Approved", or as specifically stated in the specific conditions of this Acceptance.

3. Renewals of Acceptance will not be considered if:
   a. There has been a change in the South Florida Building Code affecting the evaluation of this product and the product is not in compliance with the code changes.
   b. The product is no longer the same product (identical) as the one originally approved.
   c. If the Acceptance holder has not complied with all the requirements of this acceptance, including the correct installation of the product.
   d. The engineer, who originally prepared, signed and sealed the required documentation initially submitted, is no longer practicing the engineering profession.

4. Any revision or change in the materials, use, and/or manufacture of the product or process shall automatically be cause for termination of this Acceptance, unless prior written approval has been requested (through the filing of a revision application with appropriate fee) and granted by this office.

5. Any of the following shall also be grounds for removal of this Acceptance:
   a. Unsatisfactory performance of this product or process.
   b. Misuse of this Acceptance as an endorsement of any product, for sales, advertising or any other purposes.

6. The Notice of Acceptance number preceded by the words Miami-Dade County, Florida, and followed by the expiration date may be displayed in advertising literature. If any portion of the Notice of Acceptance is displayed, then it shall be done in its entirety.

7. A copy of this Acceptance as well as approved drawings and other documents, where it applies, shall be provided to the user by the manufacturer or its distributors and shall be available for inspection at the job site at all times. The engineer needs not reseal the copies.

8. Failure to comply with any section of this Acceptance shall be cause for termination and removal of Acceptance.

9. This Notice of Acceptance consists of pages 1, 2 and this last page 3.

**END OF THIS ACCEPTANCE**

Helmy A. Makar

Helmy A. Makar, P.E.- Product Control Examiner
Product Control Division

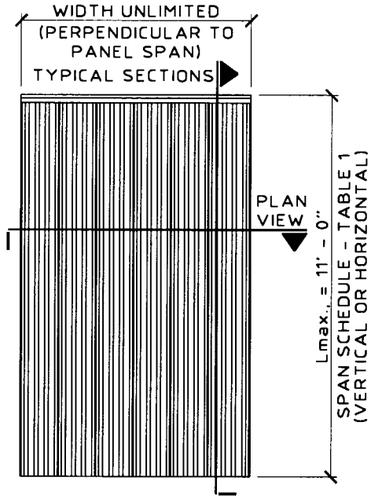


**SOLID PANEL ELEVATION**
SCALE: 1/4" = 1' - 0"

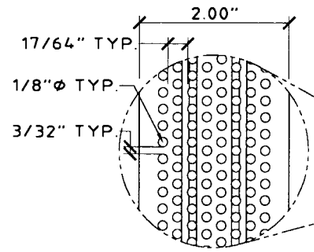


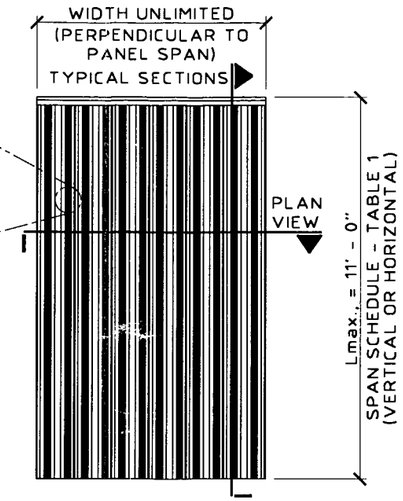


**PERFORATED PANEL ELEVATION**
SCALE: 1/4" = 1' - 0"

GENERAL NOTES:

1. THIS SHUTTER SYSTEM IS DESIGNED IN ACCORDANCE WITH THE SOUTH FLORIDA BUILDING CODE 1994 EDITION FOR MIAMI-DADE COUNTY.
2. POSITIVE AND NEGATIVE DESIGN PRESSURE CALCULATIONS SHALL BE PERFORMED FOR SPECIFIC JOBS IN ACCORDANCE WITH ASCE 7-88 "MINIMUM DESIGN LOADS FOR BUILDINGS AND OTHER STRUCTURES". TABLES SHALL BE REFERENCED AT THE APPROPRIATE DESIGN LOADS.
3. STORM PANELS SHALL BE 5052-H32 ALUMINUM ALLOY 0.063" THICK. ALL ALUMINUM EXTRUSIONS SHALL BE 6063-T6, U.O.N.
4. PRODUCT MARKINGS SHALL BE WITHIN 12" OF ONE END OF THE PANEL WITH A MIN. OF ONE MARKING PER PANEL, AND SHALL BE LABELED AS FOLLOWS:
   **THE SEE THRU SHUTTER COMPANY, INC.**
   **DELRAY BEACH, FLORIDA**
   **MIAMI-DADE COUNTY PRODUCT CONTROL APPROVED**
5. ALL BOLTS AND WASHERS SHALL BE GALVANIZED OR STAINLESS STEEL WITH A MINIMUM TENSILE STRENGTH OF 60 K.S.I.
6. FOR PANELS "1" & "2" USE SPAN VS. WIND LOAD TABLE 1 AND MINIMUM STORM PANEL SEPARATION FROM GLASS TABLE 2.
7. MATERIAL SPECIFICATIONS NOTED HEREIN ARE THE MANUFACTURER'S REPRESENTATION OF MATERIALS USED IN PRODUCT TESTING.
8. THE DETAILS AND SPECIFICATIONS SHOWN HEREIN REPRESENT THE PRODUCTS TESTED FOR IMPACT, CYCLIC AND UNIFORM STATIC AIR PRESSURE TESTING IN CONFORMANCE WITH DADE COUNTY PROTOCOLS PA 201, 203, AND 202.
   **REFERENCE HURRICANE ENGINEERING TESTING, INC. (H.E.T.I.) TEST REPORTS No. 96-550 AND No. 96-553. REFERENCE, ALSO, CONSTRUCTION TESTING CORP. (C.T.C.) TEST REPORTS No. 99-021, No. 99-026, 99-032, 99-033, 99-034 & 99-035.**
9. TOP & BOTTOM DETAILS SHOWN MAY BE INTERCHANGED AS FIELD CONDITIONS DICTATE. PANELS MAY BE MOUNTED HORIZONTALLY WHERE APPLICABLE.
10. ANCHORS SHALL BE INSTALLED IN ACCORDANCE WITH MANUFACTURERS RECOMMENDATIONS. EMBEDMENT LENGTHS SHALL BE AS NOTED AND DO NOT INCLUDE STUCCO OR OTHER FINISHES.
11. PERFORATED PANELS MAY BE USED WITH SOLID PANELS ON SAME OPENING, BUT MINIMUM SEPARATION FROM GLASS SHALL COMPLY WITH PERFORATED PANELS REQUIREMENTS IN TABLE 2.

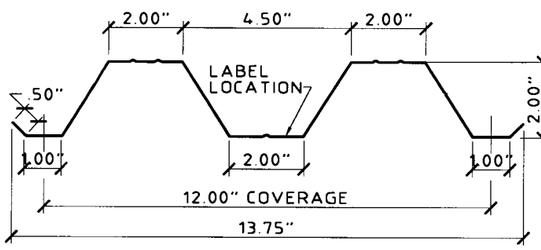


1 **STORM PANEL**
SCALE: 3" = 1' - 0"

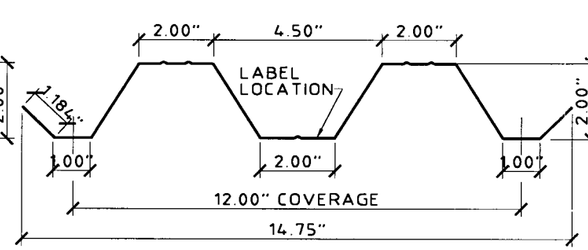


2 **STORM PANEL**
SCALE: 3" = 1' - 0"

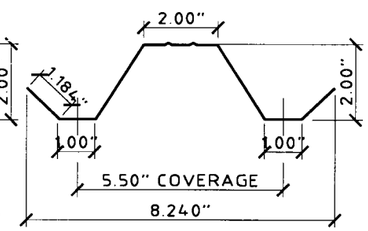


3 **HALF STORM PANEL**
SCALE: 3" = 1' - 0"

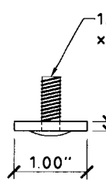


4 **SLIDE STRAP**
SCALE: HALF SIZE

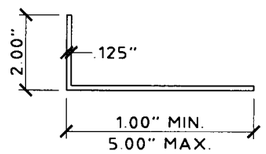


5 **ANGLE**
SCALE: 3" = 1' - 0"

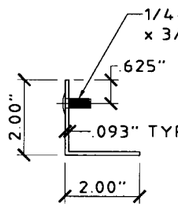


6 **STUD ANGLE**
SCALE: 3" = 1' - 0"

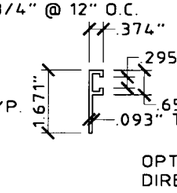


7 **"F" TRACK**
SCALE: 3" = 1' - 0"

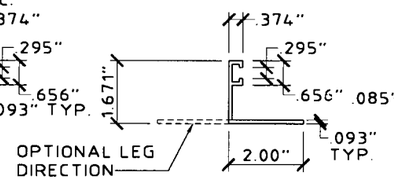


8 **"F" ANGLE**
SCALE: 3" = 1' - 0"

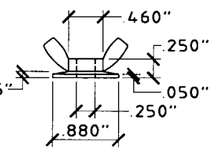


(ZAMAC 3 ALLOY)
9 **WASHERED WINGNUT**
SCALE : HALF SIZE

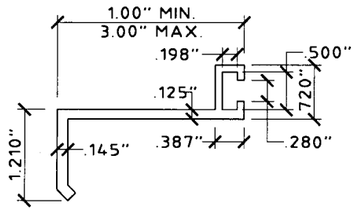


10 **BUILD-OUT F-TRACK**
SCALE : HALF SIZE

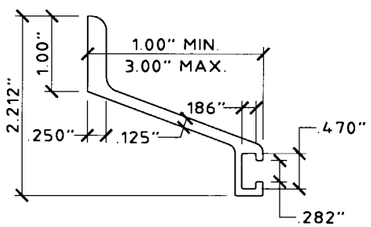


11 **BUILD-OUT F-TRACK**
SCALE : HALF SIZE

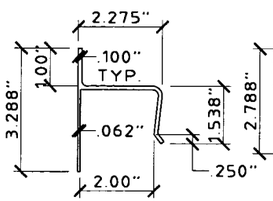


12 **"h" HEADER**
SCALE: 3" = 1' - 0"

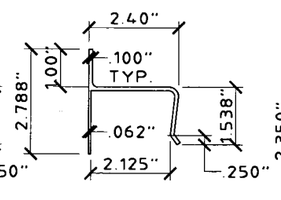


13 **"h" HEADER**
SCALE: 3" = 1' - 0"

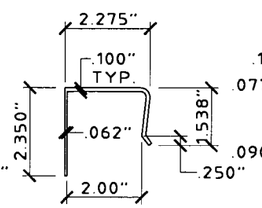


14 **"U" HEADER**
SCALE: 3" = 1' - 0"

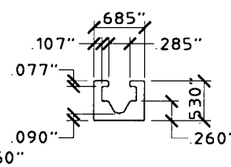


15 **RECESS TRACK**
SCALE : HALF SIZE

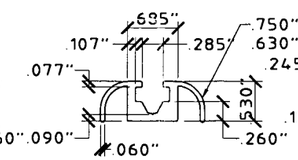


16 **DECORATIVE TRACK**
SCALE : HALF SIZE

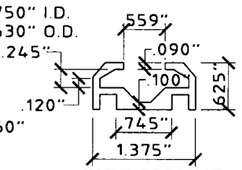


17 **INSIDE MOUNT SLIDE TRACK**
SCALE : HALF SIZE

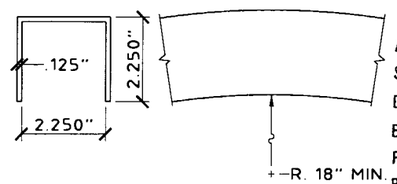


18 **ARCHED "U" HEADER**
SCALE: 3" = 1' - 0"

APPROVED AS COMPLYING WITH THE SOUTH FLORIDA BUILDING CODE
DATE February 04, 2000
BY Hetang A. Mehta
PRODUCT CONTROL DIVISION
BUILDING CODE COMPLIANCE OFFICE
ACCEPTANCE NO. 99-1108.04

KNEZEVICH & ASSOCIATES, INC.
CONSULTING ENGINEERS • PRODUCT TESTING
1260 N. UNIVERSITY DRIVE, SUITE 180 • FORT LAUDERDALE, FL 33322
TEL: (954) 382-2800 • FAX: (954) 382-2989
WEBSITE: WWW.KNEZEVICH.COM • E-MAIL: KA@KNEZEVICH.COM
COPYRIGHT © 2000 KNEZEVICH & ASSOCIATES, INC.

0.063" PERFORATED AND SOLID ALUMINUM STORM PANELS

See Thru Shutter Company
10460 N.W. 50th STREET
SUNRISE, FL 33351
TEL(954) 746-5823
FAX(954) 746-4737

revisions

| no | date | by | description |
|---|---|---|---|
| 1 | 12/02/99 | VJK | COUNTY COMMENTS |
| 2 | 01/06/00 | VJK | COUNTY COMMENTS |

V.J. KNEZEVICH
PROFESSIONAL ENGINEER
FL License No: PE 0010983

JAN 06 2000

| | |
|---|---|
| date 10/19/99 | |
| scale AS NOTED | drawn by MC |
| design by VJK | checked by VJK |

drawing no. 99-340
sheet 1 of 6

01/06/00 09:45

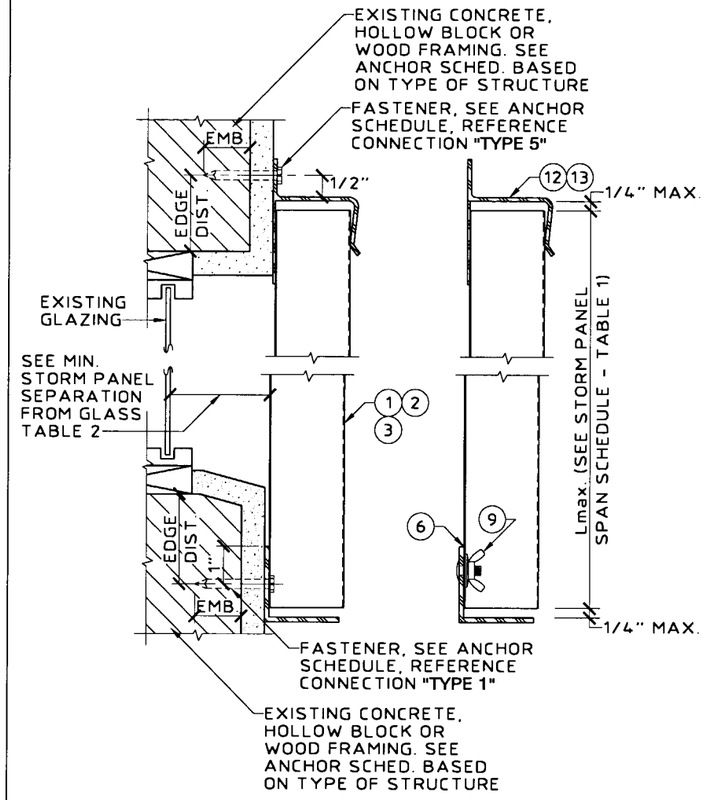


(A) **WALL MOUNT SECTION**
SCALE: 3" = 1' - 0"

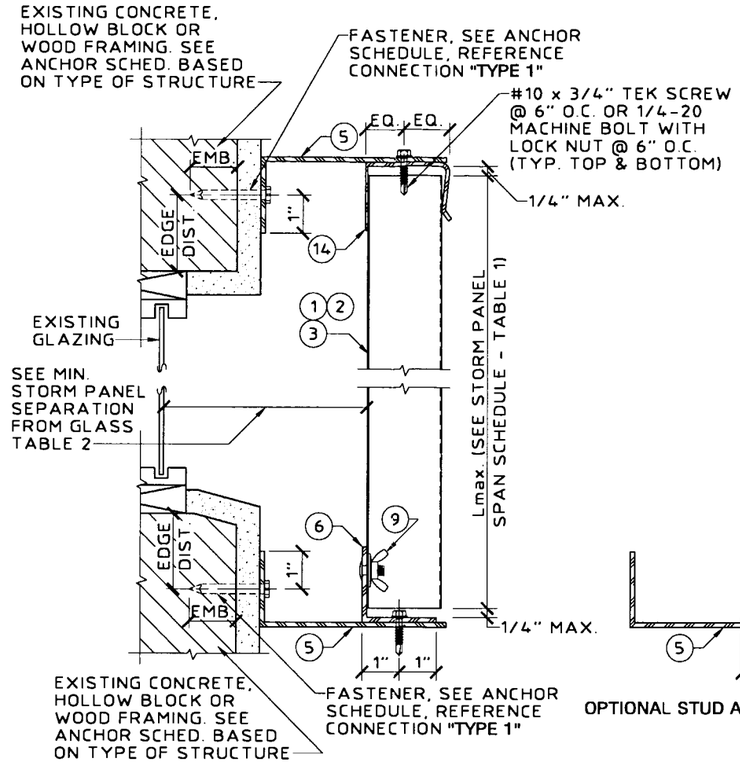


(B) **BUILD-OUT MOUNT SECTION**
SCALE: 3" = 1' - 0"

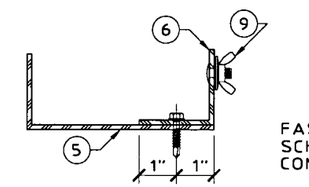


OPTIONAL STUD ANGLE DIRECTION

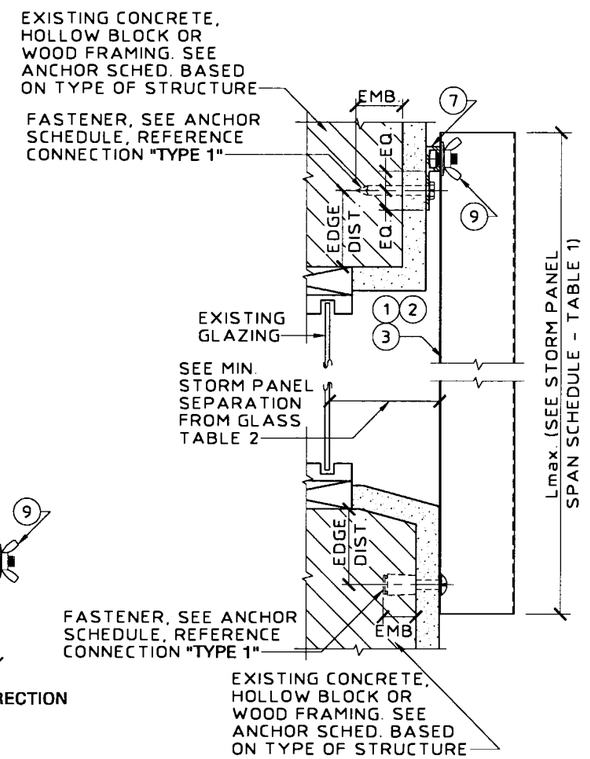


(C) **"F" TRACK/DIRECT MOUNT SECTION**
SCALE: 3" = 1' - 0"

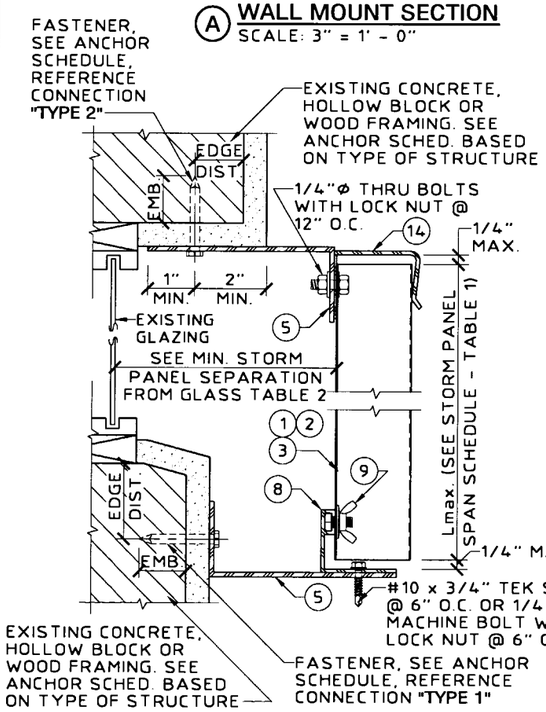


(D) **BUILD-OUT MOUNT SECTION**
SCALE: 3" = 1' - 0"

**DETAIL E ANCHOR SCHEDULE**

| 1/4"Ø ITW TAPCON W/ 1-3/4" MIN. EMBEDMENT | | 1/4"Ø POWERS CALK-IN W/ 7/8" EMBEDMENT & 1/4-20 STAINLESS STEEL MACHINE SCREW | | 1/4"Ø WOOD LAG SCREW W/ MINIMUM 1-3/4" PENETRATION SHEAR PARALLEL OR PERPENDICULAR TO WOOD GRAIN |
|---|---|---|---|---|
| CONC. | BLOCK | CONC. | BLOCK | WOOD |
| 7" | 3" | 12" | 5" | 12" |

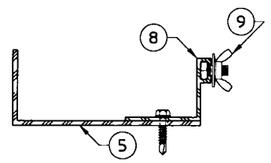


OPTIONAL "F" ANGLE DIRECTION

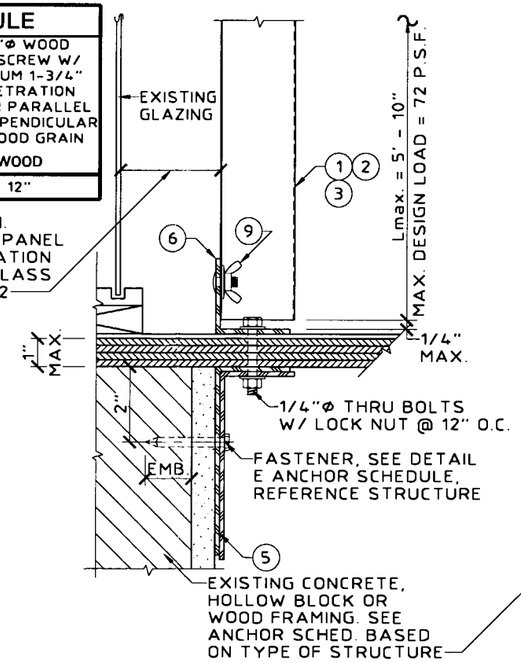


(E) **"PASS THRU" SECTION**
SCALE: 3" = 1' - 0"

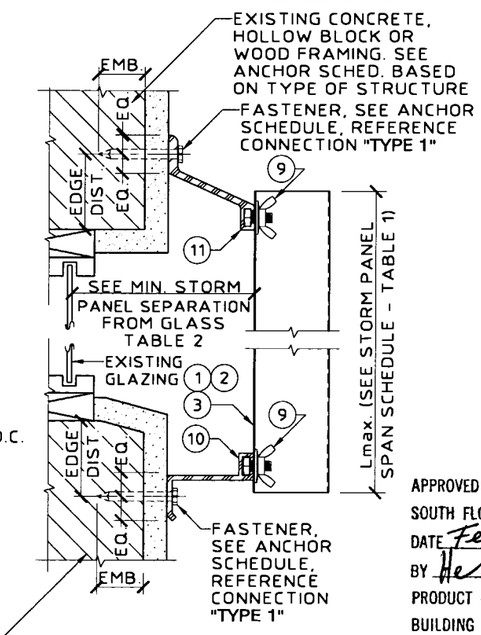


(F) **BUILD-OUT MOUNT SECTION**
SCALE: 3" = 1' - 0"

APPROVED AS COMPLYING WITH THE SOUTH FLORIDA BUILDING CODE
DATE February 04, 2000
BY Henry A. Molina
PRODUCT CONTROL DIVISION
BUILDING CODE COMPLIANCE OFFICE
ACCEPTANCE NO. 99-1108.04


KNEZEVICH & ASSOCIATES, INC.
CONSULTING ENGINEERS • PRODUCT TESTING
1280 N. UNIVERSITY DRIVE, SUITE 180 • FORT LAUDERDALE, FL 33322
TEL: (954) 382-2800 • FAX: (954) 382-2989
WEBSITE: WWW.KNEZEVICH.COM • E-MAIL: KA@KNEZEVICH.COM


COPYRIGHT © 2000 KNEZEVICH & ASSOCIATES, INC.


0.063" PERFORATED AND SOLID ALUMINUM STORM PANELS

See Thru Shutter Company
10460 N.W. 50th STREET
SUNRISE, FL 33351
TEL(954) 746-5823
FAX(954) 746-4737

revisions

| no | date | by | description |
|---|---|---|---|
| 1 | 12/02/99 | VJK | COUNTY COMMENTS |
| 2 | 01/06/00 | VJK | COUNTY COMMENTS |

V.J. KNEZEVICH
PROFESSIONAL ENGINEER
FL License No: PE 0010983

JAN 06 2000

| | |
|---|---|
| date 10/19/99 | |
| scale AS NOTED | drawn by MC |
| design by VJK | checked by VJK |

drawing no. 99-340

sheet 2 of 6

01/06/00 09:46

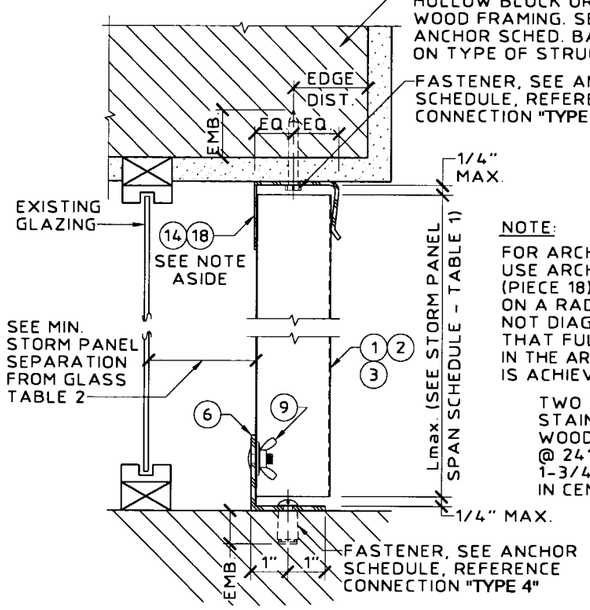


G CEILING/FLOOR MOUNT SECTION
SCALE: 3" = 1' - 0"

NOTE:

FOR ARCHED OPENINGS, USE ARCHED "U" HEADER (PIECE 18). PANEL IS CUT ON A RADIUS TO MATCH, NOT DIAGONALLY, SUCH THAT FULL ENGAGEMENT IN THE ARCHED "U" HEADER IS ACHIEVED

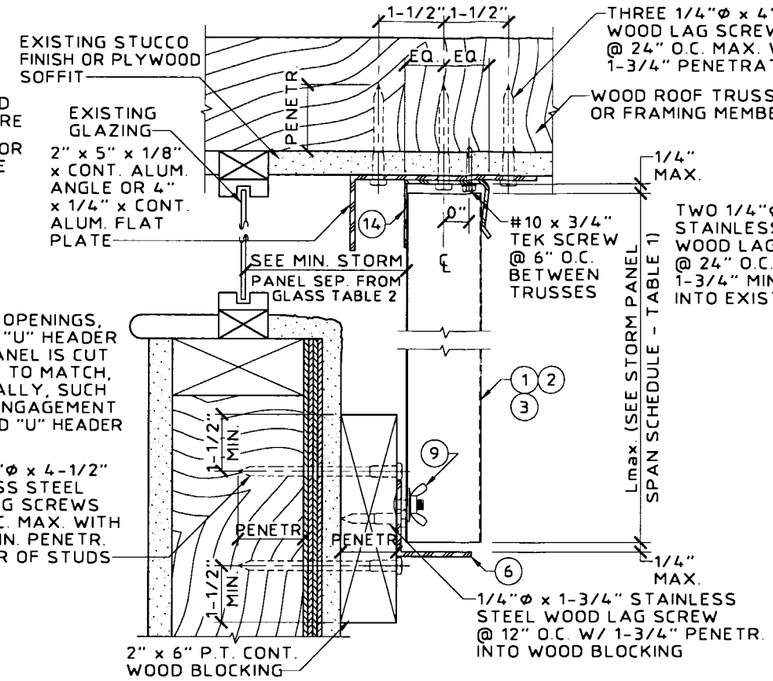


H CEILING/BUILD-OUT MOUNT SECTION
SCALE: 3" = 1' - 0"

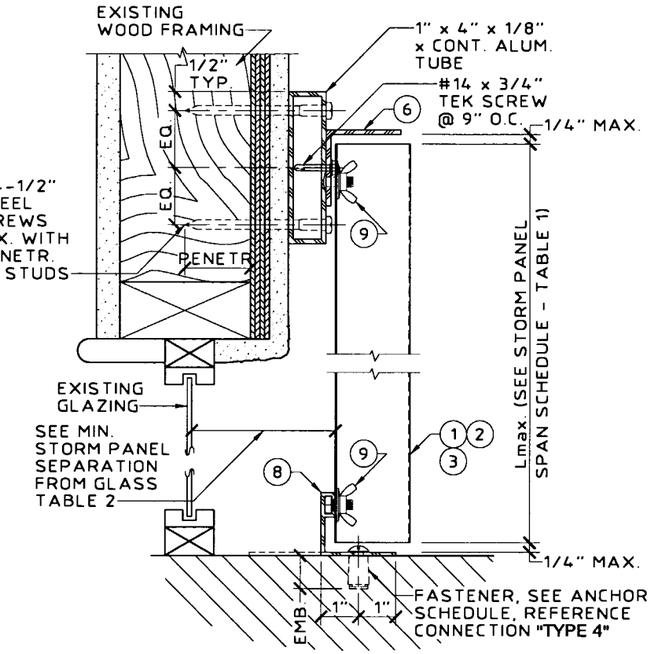


I BUILD-OUT/FLOOR MOUNT SECTION
SCALE: 3" = 1' - 0"

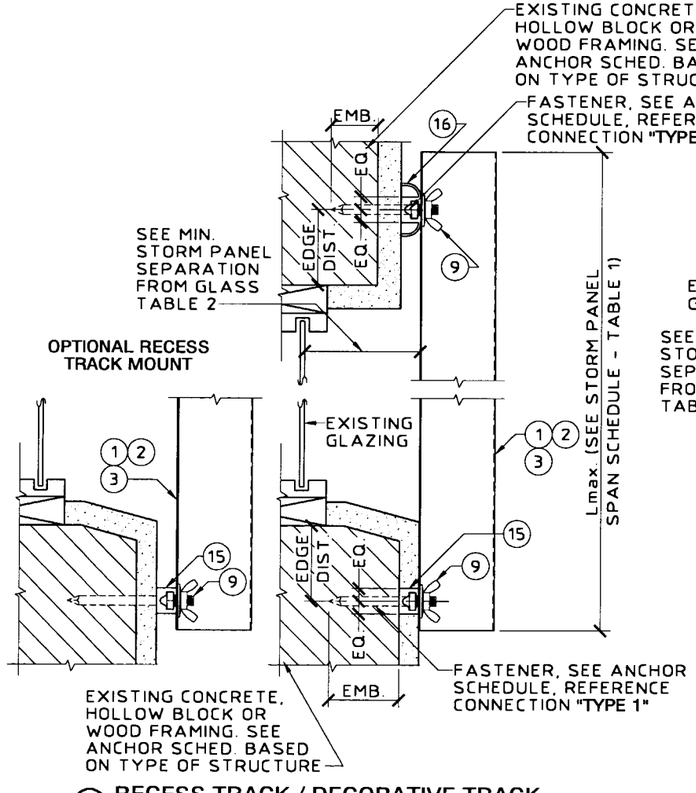


J RECESS TRACK / DECORATIVE TRACK
SCALE: 3" = 1' - 0"

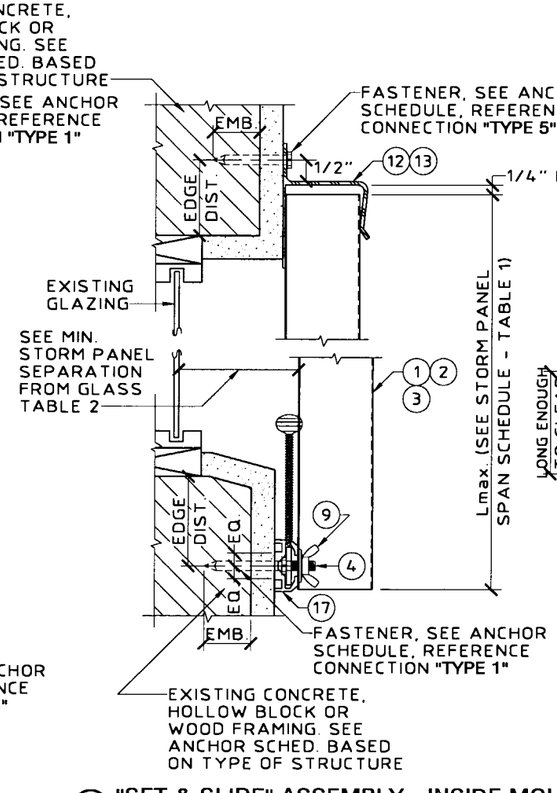


K "SET & SLIDE" ASSEMBLY - INSIDE MOUNT
SCALE: 3" = 1' - 0"

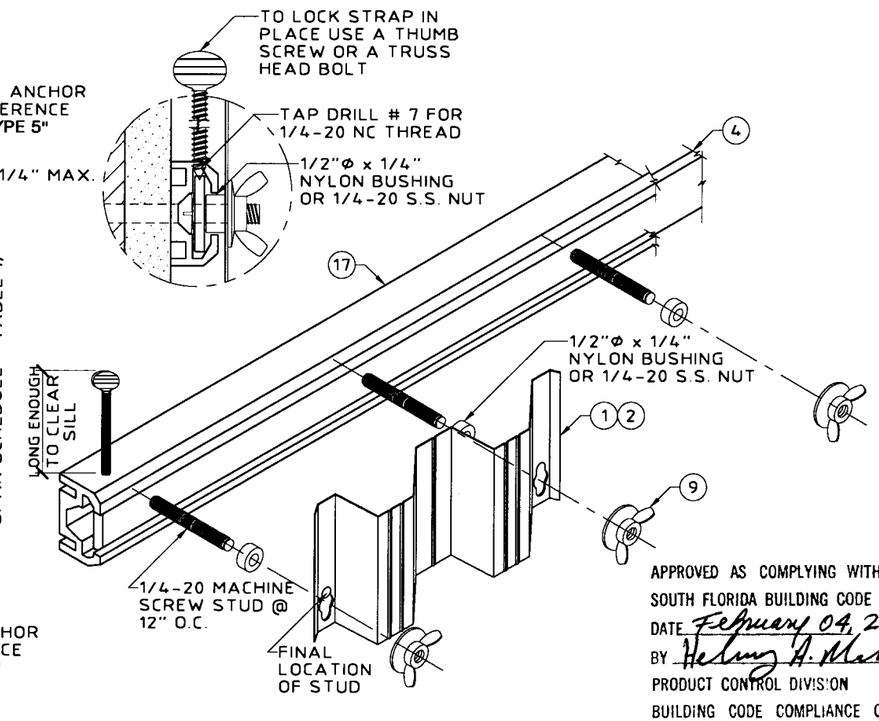


"SET & SLIDE" ASSEMBLY (ISOMETRIC VIEW)
N.T.S.

APPROVED AS COMPLYING WITH THE SOUTH FLORIDA BUILDING CODE
DATE February 04, 2000
BY Helmy A. Mak
PRODUCT CONTROL DIVISION
BUILDING CODE COMPLIANCE OFFICE
ACCEPTANCE NO. 99-1108.04

KNEZEVICH & ASSOCIATES, INC.
CONSULTING ENGINEERS • PRODUCT TESTING
1260 N. UNIVERSITY DRIVE, SUITE 180 • FORT LAUDERDALE, FL 33322
TEL: (954) 382-2800 • FAX: (954) 382-2989
WEBSITE: WWW.KNEZEVICH.COM • E-MAIL: KA@KNEZEVICH.COM
COPYRIGHT © 2000 KNEZEVICH & ASSOCIATES, INC.

0.063" PERFORATED AND SOLID ALUMINUM STORM PANELS

See Thru Shutter Company
10460 N.W. 50th STREET
SUNRISE, FL 33351
TEL(954) 746-5823
FAX(954) 746-4737

revisions

| no | date | by | description |
|---|---|---|---|
| 1 | 12/02/99 | VJK | COUNTY COMMENTS |
| 2 | 01/06/00 | VJK | COUNTY COMMENTS |

V.J. KNEZEVICH
PROFESSIONAL ENGINEER
FL License No: PE 0010983

JAN 06 2000

| | |
|---|---|
| date 10/19/99 | |
| scale AS NOTED | drawn by MC |
| design by VJK | checked by VJK |

drawing no. 99-340

sheet 3 of 6

01/06/00 09:48

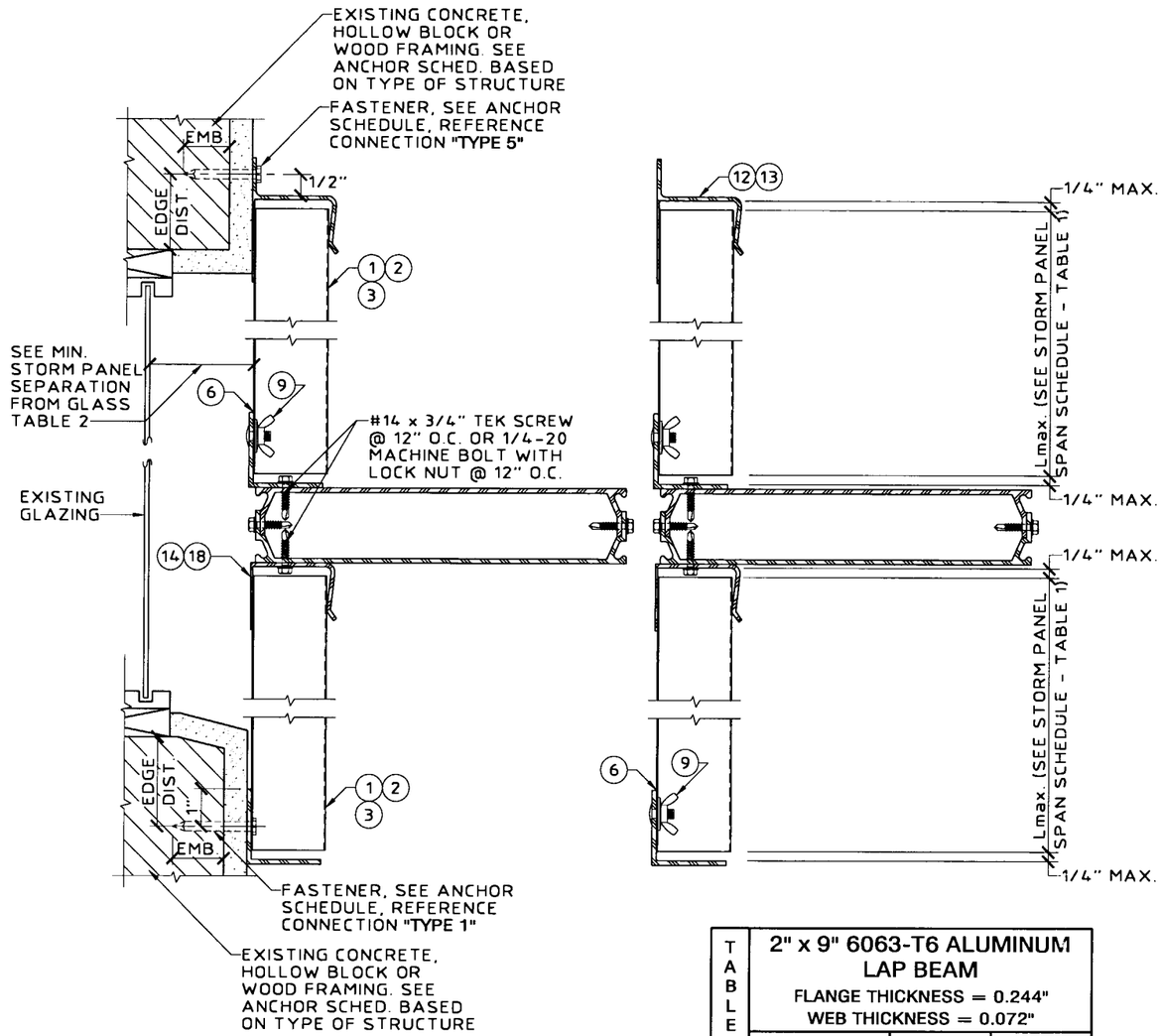


## (L) CARRY BEAM MOUNT SECTION
SCALE: 3" = 1' - 0"

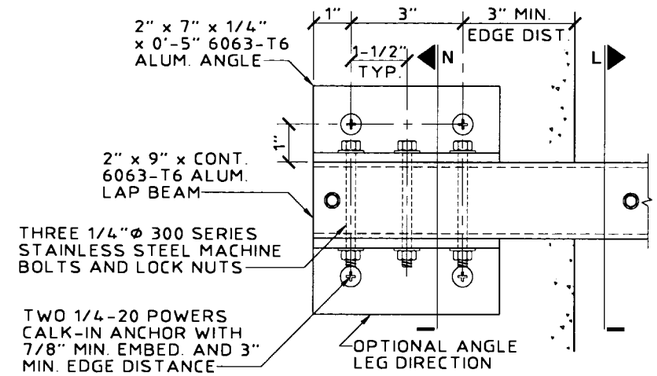


## (M) CARRY BEAM WALL CONNECTION
SCALE: 3" = 1' - 0"

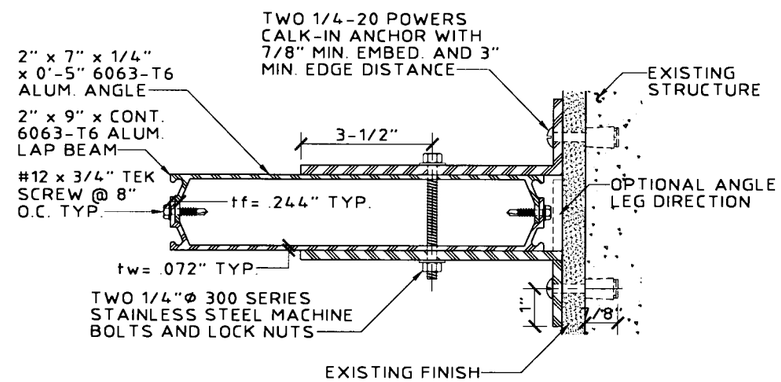


## (N) CARRY BEAM WALL CONNECTION
SCALE: 3" = 1' - 0"

TABLE 4

**2" x 9" 6063-T6 ALUMINUM LAP BEAM**
FLANGE THICKNESS = 0.244"
WEB THICKNESS = 0.072"

| DESIGN WIND LOAD (P.S.F.) | PANEL SPAN (FT. - IN.) | BEAM SPAN (FT. - IN.) |
|---|---|---|
| 30.0 | 4-0 | 17-8 |
| 30.0 | 6-6 | 15-0 |
| 30.0 | 12-0 | 12-3 |
| 60.0 | 5-0 | 13-0 |
| 60.0 | 9-4 | 10-0 |
| 90.0 | 6-8 | 9-4 |

APPROVED AS COMPLYING WITH THE SOUTH FLORIDA BUILDING CODE
DATE February 04, 2000
BY Helmy A. Mahan
PRODUCT CONTROL DIVISION
BUILDING CODE COMPLIANCE OFFICE
ACCEPTANCE NO. 99-1108.04

KNEZEVICH & ASSOCIATES, INC.
CONSULTING ENGINEERS • PRODUCT TESTING
1280 N. UNIVERSITY DRIVE, SUITE 180 • FORT LAUDERDALE, FL 33322
TEL: (954) 382-2800 • FAX: (954) 382-2989
WEBSITE: WWW.KNEZEVICH.COM • E-MAIL: KA@KNEZEVICH.COM
COPYRIGHT © 2000 KNEZEVICH & ASSOCIATES, INC.

0.063" PERFORATED AND SOLID ALUMINUM STORM PANELS

See Thru Shutter Company
10460 N.W. 50th STREET
SUNRISE, FL 33351
TEL(954) 746-5823
FAX(954) 746-4737

revisions

| no | date | by | description |
|---|---|---|---|
| 1 | 12/02/99 | VJK | COUNTY COMMENTS |
| 2 | 01/06/00 | VJK | COUNTY COMMENTS |

V.J. KNEZEVICH
PROFESSIONAL ENGINEER
FL License No: PE 0010983

JAN 06 2000

date 10/19/99
scale AS NOTED
drawn by MC
design by VJK
checked by VJK
drawing no. 99-340
sheet 4 of 6

# ANCHOR SCHEDULE

FASTENER MAXIMUM SPACING (INCHES) REQUIRED FOR VARIOUS DESIGN LOADS AND SPANS

| EXISTING STRUCTURE | ANCHOR TYPE | LOAD (W) P.S.F. MAX. (SEE NOTE 1) | MIN. 2" EDGE DISTANCE | | | | | | | | | | | | | | | MIN. 3" EDGE DISTANCE | | | | | | | | | | | | | |
|---|---|---|---|---|---|---|---|---|---|---|---|---|---|---|---|---|---|---|---|---|---|---|---|---|---|---|---|---|---|---|---|
| | | | SPANS UP TO 6' - 0" (SEE NOTE 1) | | | | | SPANS UP TO 9' - 0" (SEE NOTE 1) | | | | | SPANS UP TO 11' - 0" (SEE NOTE 1) | | | | | SPANS UP TO 6' - 0" (SEE NOTE 1) | | | | | SPANS UP TO 9' - 0" (SEE NOTE 1) | | | | | SPANS UP TO 11' - 0" (SEE NOTE 1) | | | | |
| | | | CONNECTION TYPE | | | | | CONNECTION TYPE | | | | | CONNECTION TYPE | | | | | CONNECTION TYPE | | | | | CONNECTION TYPE | | | | | CONNECTION TYPE | | | | |
| | | | 1 | 2 | 3 | 4 | 5 | 1 | 2 | 3 | 4 | 5 | 1 | 2 | 3 | 4 | 5 | 1 | 2 | 3 | 4 | 5 | 1 | 2 | 3 | 4 | 5 | 1 | 2 | 3 | 4 | 5 |
| CONCRETE | 1/4"Φ ITW OR ELCO TAPCON W/ 1-3/4" MIN. EMBEDMENT (MIN. 3,145 P.S.I. CONCRETE) | 48.0 | 12 | 12 | 12 | 12 | 12 | 12 | 12 | 9 | 8 | 12 | 12 | 12 | 8 | 7 | 12 | 12 | 12 | 12 | 12 | 12 | 12 | 12 | 11 | 10 | 12 | 12 | 12 | 9 | 8 | 12 |
| | | 55.0 | 12 | 12 | 12 | 11 | 12 | 12 | 12 | 8 | 7 | 12 | 12 | 10 | 7 | 6 | 12 | 12 | 12 | 12 | 12 | 12 | 12 | 12 | 9 | 8 | 12 | 12 | 12 | 8 | 7 | 12 |
| | | 62.0 | 12 | 12 | 11 | 10 | 12 | 12 | 11 | 7 | 6 | 12 | 12 | 10 | 7 | 6 | 12 | 12 | 12 | 12 | 11 | 12 | 12 | 12 | 8 | 7 | 12 | 12 | 12 | 8 | 7 | 12 |
| | | 75.0 | 12 | 12 | 9 | 8 | 12 | 12 | 10 | 7 | 6 | 12 | 12 | 10 | 7 | 6 | 12 | 12 | 12 | 10 | 9 | 12 | 12 | 12 | 8 | 7 | 12 | 12 | 12 | 8 | 7 | 12 |
| | | 200.0 | 12 | 10 | 7 | 6 | 12 | 12 | 10 | 7 | 6 | 12 | 12 | 10 | 7 | 6 | 12 | 12 | 12 | 8 | 7 | 12 | 12 | 12 | 8 | 7 | 12 | 12 | 12 | 8 | 7 | 12 |
| | * 1/4"Φ POWERS CALK-IN W/ 7/8" EMBEDMENT & 1/4-20 STAINLESS STEEL MACHINE SCREW (MIN. 3,000 P.S.I. CONCRETE) | 48.0 | 12 | 12 | 12 | 12 | 12 | 12 | 12 | 10 | 9 | 12 | 12 | 10 | 8 | 7 | 12 | 12 | 12 | 12 | 12 | 12 | 12 | 12 | 12 | 12 | 12 | 12 | 12 | 12 | 12 | 12 |
| | | 55.0 | 12 | 12 | 12 | 12 | 12 | 12 | 11 | 8 | 8 | 12 | 12 | 9 | 7 | 6 | 12 | 12 | 12 | 12 | 12 | 12 | 12 | 12 | 12 | 12 | 12 | 12 | 12 | 11 | 10 | 12 |
| | | 62.0 | 12 | 12 | 11 | 11 | 12 | 12 | 10 | 7 | 7 | 12 | 12 | 9 | 7 | 6 | 12 | 12 | 12 | 12 | 12 | 12 | 12 | 12 | 12 | 11 | 12 | 12 | 12 | 11 | 10 | 12 |
| | | 75.0 | 12 | 12 | 9 | 9 | 12 | 12 | 9 | 7 | 6 | 12 | 12 | 9 | 7 | 6 | 12 | 12 | 12 | 12 | 12 | 12 | 12 | 12 | 11 | 10 | 12 | 12 | 12 | 11 | 10 | 12 |
| | | 200.0 | 12 | 9 | 7 | 6 | 12 | 12 | 9 | 7 | 6 | 12 | 12 | 9 | 7 | 6 | 12 | 12 | 12 | 11 | 10 | 12 | 12 | 12 | 11 | 10 | 12 | 12 | 12 | 11 | 10 | 12 |
| | 1/4"Φ x 1" HILTI METAL HIT ANCHOR WITH 3/4" MIN. EMBEDMENT (MIN. 2,000 P.S.I. CONCRETE) | 48.0 | 12 | 12 | 9 | 8 | 12 | 11 | 10 | 6 | 5 | 11 | 9 | 8 | 5 | 4 | 9 | 12 | 12 | 11 | 10 | 12 | 12 | 12 | 7 | 6 | 12 | 10 | 10 | 6 | 5 | 10 |
| | | 55.0 | 12 | 12 | 8 | 7 | 12 | 9 | 9 | 5 | 4 | 9 | 7 | 7 | 4 | 4 | 7 | 12 | 12 | 10 | 8 | 12 | 10 | 11 | 6 | 5 | 10 | 8 | 9 | 5 | 4 | 8 |
| | | 62.0 | 12 | 12 | 7 | 6 | 12 | 8 | 8 | 4 | 4 | 8 | 7 | 7 | 4 | 3 | 7 | 12 | 12 | 8 | 7 | 12 | 9 | 10 | 5 | 11 | 9 | 8 | 9 | 5 | 4 | 8 |
| | | 75.0 | 10 | 10 | 6 | 5 | 10 | 7 | 7 | 4 | 3 | 7 | 7 | 7 | 4 | 3 | 7 | 12 | 12 | 7 | 6 | 12 | 8 | 9 | 5 | 4 | 8 | 8 | 9 | 5 | 4 | 8 |
| | | 200.0 | 7 | 7 | 4 | 3 | 7 | 7 | 7 | 4 | 3 | 7 | 7 | 7 | 4 | 3 | 7 | 8 | 9 | 5 | 4 | 8 | 8 | 9 | 5 | 12 | 8 | 8 | 9 | 5 | 4 | 8 |
| | * 1/4"Φ TRU-FAST TAP GRIP CFAS W/ 1" MIN. EMBEDMENT (MIN. 3,000 P.S.I. CONCRETE) | 48.0 | 12 | 12 | 10 | 9 | 12 | 12 | 10 | 7 | 6 | 12 | 12 | 8 | 5 | 5 | 12 | 12 | 12 | 12 | 11 | 12 | 12 | 12 | 8 | 7 | 12 | 12 | 11 | 7 | 6 | 12 |
| | | 55.0 | 12 | 12 | 9 | 8 | 12 | 12 | 9 | 6 | 5 | 12 | 10 | 7 | 5 | 4 | 10 | 12 | 12 | 11 | 10 | 12 | 12 | 11 | 7 | 6 | 12 | 12 | 9 | 6 | 5 | 11 |
| | | 62.0 | 12 | 12 | 8 | 7 | 12 | 11 | 8 | 5 | 5 | 11 | 10 | 7 | 5 | 4 | 9 | 12 | 12 | 10 | 9 | 12 | 12 | 10 | 6 | 6 | 12 | 12 | 9 | 6 | 5 | 11 |
| | | 75.0 | 12 | 10 | 6 | 6 | 12 | 10 | 7 | 5 | 4 | 9 | 10 | 7 | 5 | 4 | 9 | 12 | 12 | 8 | 7 | 12 | 12 | 9 | 6 | 5 | 11 | 12 | 9 | 6 | 5 | 11 |
| | | 200.0 | 10 | 7 | 5 | 4 | 9 | 10 | 7 | 5 | 4 | 9 | 10 | 7 | 5 | 4 | 9 | 12 | 9 | 6 | 5 | 11 | 12 | 9 | 6 | 5 | 11 | 12 | 9 | 6 | 5 | 11 |
| | 1/4"Φ SCREW LEAD WITH 1-1/2" MIN. EMBEDMENT AND #14 x 1-1/2" SMS (MIN. 3,000 P.S.I. CONCRETE) | 48.0 | 12 | 6 | 5 | 5 | 12 | 12 | 4 | 3 | 3 | 12 | 10 | 3 | 3 | | 10 | 12 | 12 | 9 | 8 | 12 | 12 | 8 | 6 | 5 | 12 | 12 | 6 | 5 | 4 | 12 |
| | | 55.0 | 12 | 5 | 4 | 4 | 12 | 11 | 3 | 3 | | 11 | 9 | 3 | | | 8 | 12 | 10 | 8 | 7 | 12 | 12 | 7 | 5 | 4 | 12 | 11 | 5 | 4 | 4 | 11 |
| | | 62.0 | 12 | 5 | 4 | 3 | 12 | 10 | 3 | | | 10 | 9 | 3 | | | 8 | 12 | 9 | 7 | 6 | 12 | 12 | 6 | 4 | 4 | 12 | 11 | 5 | 4 | 4 | 10 |
| | | 75.0 | 12 | 4 | 3 | 3 | 12 | 9 | 3 | | | 8 | 9 | 3 | | | 8 | 12 | 7 | 5 | 5 | 12 | 11 | 5 | 4 | 4 | 10 | 11 | 5 | 4 | 4 | 10 |
| | | 200.0 | 9 | 3 | | | 8 | 9 | 3 | | | 8 | 9 | 3 | | | 8 | 11 | 5 | 4 | 4 | 10 | 11 | 5 | 4 | 4 | 10 | 11 | 5 | 4 | 4 | 10 |
| HOLLOW CONCRETE BLOCK | 1/4"Φ ITW OR ELCO TAPCON W/ 1-1/4" EMBEDMENT | 48.0 | 12 | 12 | 8 | 7 | 12 | 10 | 9 | 5 | 5 | 10 | 8 | 7 | 4 | 4 | 8 | 12 | 12 | 9 | 8 | 12 | 11 | 10 | 6 | 5 | 11 | 9 | 8 | 5 | 4 | 9 |
| | | 55.0 | 12 | 12 | 7 | 6 | 12 | 9 | 8 | 5 | 4 | 9 | 7 | 6 | 4 | 3 | 6 | 12 | 12 | 8 | 7 | 12 | 9 | 9 | 5 | 5 | 9 | 8 | 7 | 4 | 4 | 7 |
| | | 62.0 | 12 | 10 | 6 | 6 | 12 | 8 | 7 | 4 | 3 | 8 | 7 | 6 | 4 | 3 | 6 | 12 | 12 | 7 | 6 | 12 | 8 | 8 | 5 | 4 | 8 | 8 | 7 | 4 | 4 | 7 |
| | | 75.0 | 10 | 8 | 5 | 5 | 10 | 7 | 6 | 4 | 3 | 6 | 7 | 6 | 4 | 3 | 6 | 10 | 10 | 6 | 5 | 10 | 8 | 7 | 4 | 4 | 7 | 8 | 7 | 4 | 4 | 7 |
| | | 200.0 | 7 | 6 | 4 | 3 | 6 | 7 | 6 | 4 | 3 | 6 | 7 | 6 | 4 | 3 | 6 | 8 | 7 | 4 | 4 | 7 | 8 | 7 | 4 | 4 | 7 | 8 | 7 | 4 | 4 | 7 |
| | * 1/4"Φ POWERS CALK-IN W/ 7/8" EMBEDMENT & 1/4-20 STAINLESS STEEL MACHINE SCREW | 48.0 | 12 | 12 | 8 | 8 | 12 | 12 | 8 | 5 | 5 | 12 | 10 | 7 | 4 | 4 | 10 | 12 | 12 | 12 | 12 | 12 | 12 | 12 | 9 | 8 | 12 | 12 | 11 | 7 | 6 | 12 |
| | | 55.0 | 12 | 11 | 7 | 7 | 12 | 11 | 7 | 5 | 4 | 11 | 9 | 6 | 4 | 3 | 8 | 12 | 12 | 11 | 10 | 12 | 12 | 12 | 7 | 7 | 12 | 11 | 10 | 6 | 5 | 10 |
| | | 62.0 | 12 | 10 | 6 | 6 | 12 | 10 | 6 | 4 | 4 | 10 | 9 | 6 | 4 | 3 | 8 | 12 | 12 | 10 | 9 | 12 | 12 | 11 | 7 | 6 | 12 | 11 | 10 | 6 | 5 | 10 |
| | | 75.0 | 12 | 8 | 5 | 5 | 12 | 9 | 6 | 4 | 3 | 8 | 9 | 6 | 4 | 3 | 8 | 12 | 12 | 8 | 7 | 12 | 11 | 10 | 6 | 5 | 10 | 11 | 10 | 6 | 5 | 10 |
| | | 200.0 | 9 | 6 | 4 | 3 | 8 | 9 | 6 | 4 | 3 | 8 | 9 | 6 | 4 | 3 | 8 | 11 | 10 | 6 | 5 | 10 | 11 | 10 | 6 | 5 | 10 | 11 | 10 | 6 | 5 | 10 |
| | 1/4"Φ x 1" HILTI METAL HIT ANCHOR WITH 3/4" MIN. EMBEDMENT | 48.0 | 12 | 12 | 12 | 12 | 12 | 12 | 12 | 9 | 8 | 12 | 12 | 11 | 8 | 7 | 12 | 12 | 12 | 12 | 12 | 12 | 12 | 12 | 12 | 10 | 12 | 12 | 12 | 9 | 8 | 12 |
| | | 55.0 | 12 | 12 | 12 | 11 | 12 | 12 | 12 | 8 | 7 | 12 | 12 | 10 | 7 | 6 | 12 | 12 | 12 | 12 | 12 | 12 | 12 | 12 | 10 | 9 | 12 | 12 | 12 | 8 | 7 | 12 |
| | | 62.0 | 12 | 12 | 11 | 10 | 12 | 12 | 11 | 7 | 6 | 12 | 12 | 10 | 6 | 6 | 12 | 12 | 12 | 12 | 12 | 12 | 12 | 12 | 9 | 8 | 12 | 12 | 12 | 8 | 7 | 12 |
| | | 75.0 | 12 | 12 | 9 | 8 | 12 | 12 | 10 | 6 | 6 | 12 | 12 | 10 | 6 | 6 | 12 | 12 | 12 | 11 | 10 | 12 | 12 | 12 | 8 | 7 | 12 | 12 | 12 | 8 | 7 | 12 |
| | | 200.0 | 12 | 10 | 6 | 6 | 12 | 12 | 10 | 6 | 6 | 12 | 12 | 10 | 6 | 6 | 12 | 12 | 12 | 8 | 7 | 12 | 12 | 12 | 8 | 7 | 12 | 12 | 12 | 8 | 7 | 12 |
| | * 1/4"Φ TRU-FAST TAP GRIP CFAS W/ 1-1/4" EMBEDMENT | 48.0 | 11 | 7 | 5 | 4 | 11 | 7 | 4 | 3 | 3 | 7 | 6 | 4 | | | 6 | 12 | 9 | 6 | 5 | 12 | 8 | 6 | 4 | 3 | 8 | 6 | 5 | 3 | 3 | 6 |
| | | 55.0 | 9 | 6 | 4 | 4 | 9 | 6 | 4 | | | 6 | 5 | 3 | | | 4 | 10 | 8 | 5 | 5 | 10 | 7 | 5 | 3 | 3 | 7 | 5 | 4 | 3 | | 5 |
| | | 62.0 | 8 | 5 | 3 | 3 | 8 | 5 | 3 | | | 5 | 5 | 3 | | | 4 | 9 | 7 | 4 | 4 | 9 | 6 | 4 | 3 | | 6 | 5 | 4 | 3 | | 5 |
| | | 75.0 | 7 | 4 | 3 | | 7 | 5 | 3 | | | 4 | 5 | 3 | | | 4 | 8 | 6 | 4 | 3 | 8 | 5 | 4 | 3 | | 5 | 5 | 4 | 3 | | 5 |
| | | 200.0 | 5 | 3 | | | 4 | 5 | 3 | | | 4 | 5 | 3 | | | 4 | 5 | 4 | 3 | | 5 | 5 | 4 | 3 | | 5 | 5 | 4 | 3 | | 5 |

# ANCHOR SCHEDULE

FASTENER MAXIMUM SPACING (INCHES) REQUIRED FOR VARIOUS DESIGN LOADS AND SPANS

| EXISTING STRUCTURE | ANCHOR TYPE | LOAD (W) P.S.F. MAX. (SEE NOTE 1) | MIN. 3/4" EDGE DISTANCE | | | | | | | | | | | | | | |
|---|---|---|---|---|---|---|---|---|---|---|---|---|---|---|---|---|---|
| | | | SPANS UP TO 6' - 0" (SEE NOTE 1) | | | | | SPANS UP TO 9' - 0" (SEE NOTE 1) | | | | | SPANS UP TO 11' - 0" (SEE NOTE 1) | | | | |
| | | | CONNECTION TYPE | | | | | CONNECTION TYPE | | | | | CONNECTION TYPE | | | | |
| | | | 1 | 2 | 3 | 4 | 5 | 1 | 2 | 3 | 4 | 5 | 1 | 2 | 3 | 4 | 5 |
| WOOD | 1/4"Φ WOOD LAG SCREW W/ MINIMUM 1-3/4" PENETRATION SHEAR PARALLEL OR PERPENDICULAR TO WOOD GRAIN | 48.0 | 12 | 12 | 10 | 10 | 12 | 12 | 8 | 7 | 6 | 12 | 12 | 6 | 5 | 5 | 12 |
| | | 55.0 | 12 | 10 | 9 | 8 | 12 | 12 | 7 | 6 | 5 | 12 | 12 | 5 | 5 | 4 | 12 |
| | | 62.0 | 12 | 9 | 8 | 7 | 12 | 12 | 6 | 5 | 5 | 12 | 12 | 5 | 4 | 4 | 12 |
| | | 75.0 | 12 | 7 | 6 | 6 | 12 | 12 | 5 | 4 | 4 | 12 | 12 | 5 | 4 | 4 | 12 |
| | | 200.0 | 12 | 5 | 4 | 4 | 12 | 12 | 5 | 4 | 4 | 12 | 12 | 5 | 4 | 4 | 12 |
| | * 453"Φ WOOD BUSHING W/ 7/8" MIN. PENETRATION & 1/4-20 SIDEWALK BOLT | 48.0 | 12 | 12 | 11 | 9 | 12 | 12 | 12 | 7 | 6 | 12 | 10 | 10 | 6 | 5 | 10 |
| | | 55.0 | 12 | 12 | 9 | 8 | 12 | 10 | 11 | 6 | 5 | 10 | 8 | 9 | 5 | 4 | 8 |
| | | 62.0 | 12 | 12 | 8 | 7 | 12 | 9 | 9 | 5 | 5 | 9 | 8 | 9 | 5 | 4 | 8 |
| | | 75.0 | 11 | 12 | 7 | 6 | 11 | 8 | 9 | 5 | 4 | 8 | 8 | 9 | 5 | 4 | 8 |
| | | 200.0 | 8 | 9 | 5 | 4 | 8 | 8 | 9 | 5 | 4 | 8 | 8 | 9 | 5 | 4 | 8 |
| | * 1/4"Φ TRU-FAST TAP GRIP CFAS W/ 2-1/4" PENETRATION | 48.0 | 12 | 12 | 12 | 12 | 12 | 12 | 12 | 10 | 9 | 12 | 12 | 12 | 8 | 7 | 12 |
| | | 55.0 | 12 | 12 | 12 | 12 | 12 | 12 | 12 | 9 | 8 | 12 | 12 | 10 | 7 | 6 | 12 |
| | | 62.0 | 12 | 12 | 12 | 11 | 12 | 12 | 11 | 8 | 7 | 12 | 12 | 10 | 7 | 6 | 12 |
| | | 75.0 | 12 | 12 | 10 | 9 | 12 | 12 | 10 | 7 | 6 | 12 | 12 | 10 | 7 | 6 | 12 |
| | | 200.0 | 12 | 10 | 7 | 6 | 12 | 12 | 10 | 7 | 6 | 12 | 12 | 10 | 7 | 6 | 12 |

## ANCHOR NOTES:

1. SPANS AND LOADS SHOWN HERE ARE FOR DETERMINING ANCHOR SPACING ONLY. ALLOWABLE STORM PANEL SPANS FOR SPECIFIC LOADS MUST BE LIMITED TO THOSE SHOWN IN TABLE 1, SHEET 5.
2. ENTER ANCHOR SCHEDULE BASED ON THE EXISTING STRUCTURE MATERIAL, ANCHOR TYPE AND EDGE DISTANCE. SELECT DESIGN LOAD GREATER THAN OR EQUAL TO NEGATIVE DESIGN LOAD ON SHUTTER AND SELECT SPAN GREATER THAN OR EQUAL TO SHUTTER SPAN.
3. EXISTING STRUCTURE MAY BE CONCRETE, HOLLOW BLOCK OR WOOD FRAMING. REFERENCE ANCHOR SCHEDULE FOR PROPER ANCHOR TYPE BASED ON TYPE OF EXISTING STRUCTURE AND APPROPRIATE CONNECTION TYPE. SEE MOUNTING SECTION DETAILS FOR IDENTIFICATION OF CONNECTION TYPE.
4. ANCHORS SHALL BE INSTALLED IN ACCORDANCE WITH MANUFACTURERS' RECOMMENDATIONS.
5. MINIMUM EMBEDMENT AND EDGE DISTANCE EXCLUDES WALL FINISH OR STUCCO.
6. WHERE EXISTING STRUCTURE IS WOOD FRAMING, WOOD FRAMING CONDITIONS VARY. FIELD VERIFY THAT FASTENERS ARE INTO ADEQUATE WOOD FRAMING MEMBERS, NOT PLYWOOD. FASTENING TO PLYWOOD IS ACCEPTABLE ONLY FOR SIDE CLOSURE PIECES.
7. WHERE LAG SCREWS FASTEN TO NARROW FACE OF STUD FRAMING, FASTENER SHALL BE LOCATED IN CENTER OF NOMINAL 2" x 4" (MIN.) WOOD STUD. 3/4" EDGE DISTANCE IS ACCEPTABLE FOR WOOD FRAMING. WOOD STUD SHALL BE "SOUTHERN PINE" G=0.55 OR GREATER DENSITY. LAG SCREWS SHALL HAVE PHILLIPS PAN HEAD OR HEX HEAD.
8. MACHINE SCREWS SHALL HAVE MINIMUM OF 1/2" ENGAGEMENT OF THREADS IN BASE ANCHOR AND MAY HAVE EITHER A PAN HEAD, TRUSS HEAD, OR WAFER HEAD (SIDEWALK BOLT), U.O.N.
9. DESIGNATES ANCHOR CONDITIONS WHICH ARE NOT ACCEPTABLE USES.
10. * DESIGNATES ANCHORS WHICH ARE REMOVABLE BY REMOVING MACHINE SCREW, NUT OR WASHERED WINGNUT.

APPROVED AS COMPLYING WITH THE
SOUTH FLORIDA BUILDING CODE
DATE February 04, 2000
BY [signature]
PRODUCT CONTROL DIVISION
BUILDING CODE COMPLIANCE OFFICE
ACCEPTANCE NO. 99-1108.04


KNEZEVICH & ASSOCIATES, INC.
CONSULTING ENGINEERS • PRODUCT TESTING
1280 N. UNIVERSITY DRIVE, SUITE 180 • FORT LAUDERDALE, FL 33322
TEL: (954) 382-2800 • FAX: (954) 382-2999
WEBSITE: WWW.KNEZEVICH.COM • E-MAIL: KA@KNEZEVICH.COM


COPYRIGHT © 2000 KNEZEVICH & ASSOCIATES, INC.


0.063" PERFORATED AND SOLID ALUMINUM STORM PANELS

See Thru Shutter Company
10460 N.W. 50th STREET
SUNRISE, FL 33351
TEL(954) 746-5823
FAX(954) 746-4737

| revisions | | | |
|---|---|---|---|
| no | date | by | description |
| 1 | 12/02/99 | VJK | COUNTY COMMENTS |
| 2 | 01/06/00 | VJK | COUNTY COMMENTS |

V.J. KNEZEVICH
PROFESSIONAL ENGINEER
FL License No: PE 0010983

JAN 06 2000

date 10/19/99
scale AS NOTED | drawn by MC
design by VJK | checked by VJK
drawing no. 99-340
sheet 5 of 6

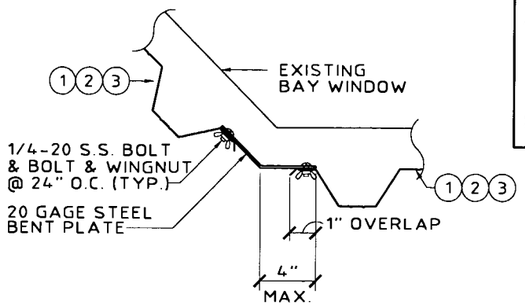


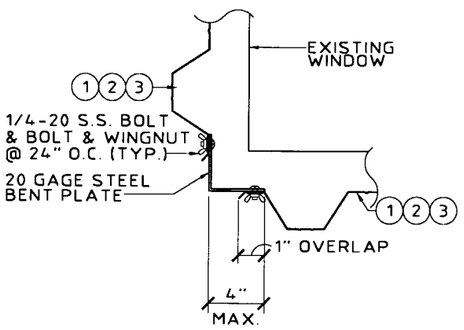


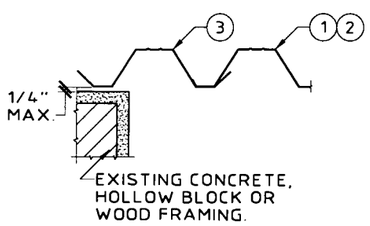


## (L) DIRECT MOUNT (HALF PANEL)
SCALE: 1-1/2" = 1' - 0"

**TABLE 2** — MINIMUM STORM PANEL SEPARATION FROM GLASS

| POSITIVE DESIGN LOAD (W) (P.S.F.) | ACTUAL SPAN (L) (FT - IN) | PERFORATED COLUMN 1: MIN. SEP. FOR ALL INSTALLATIONS LESS THAN 30' ABOVE GRADE (INCHES) | PERFORATED COLUMN 2: MIN. SEP. FOR ALL INSTALLATIONS GREATER THAN 30' ABOVE GRADE | SOLID COLUMN 1: MIN. SEP. FOR ALL INSTALLATIONS LESS THAN 30' ABOVE GRADE (INCHES) | SOLID COLUMN 2: MIN. SEP. FOR ALL INSTALLATIONS GREATER THAN 30' ABOVE GRADE (INCHES) |
|---|---|---|---|---|---|
| 30.0 | 5 - 0 | 3-3/8 | 1-3/8 | 3-3/8 | 1-3/8 |
| | 8 - 8 | 3-3/8 | 2 | 3-3/8 | 2 |
| | 10 - 0 | 3-1/2 | 2-3/8 | 3-1/8 | 2-7/8 |
| | 10 - 10 | - | - | 3-1/8 | 2-7/8 |
| 40.0 | 5 - 0 | 3-3/8 | 1-3/8 | 3-3/8 | 1-3/8 |
| | 8 - 8 | 3-3/8 | 2-1/8 | 3-3/8 | 2-1/8 |
| | 10 - 0 | 3-1/2 | 2-3/4 | 3-1/8 | 3 |
| | 10 - 3 | - | - | 3-1/8 | 3 |
| 50.0 | 5 - 0 | 3-3/8 | 1-3/8 | 3-3/8 | 1-1/2 |
| | 7 - 0 | 3-3/8 | 1-3/4 | 3-3/8 | 1-3/4 |
| | 8 - 8 | 3-3/8 | 2-3/8 | 3-3/8 | 2-3/8 |
| | 9 - 9 | 3-1/2 | 3 | 3-1/8 | 3 |
| 60.0 | 5 - 0 | 3-3/8 | 1-1/2 | 3-3/8 | 1-1/2 |
| | 7 - 0 | 3-3/8 | 1-3/4 | 3-3/8 | 1-7/8 |
| | 8 - 8 | 3-3/8 | 2-1/2 | 3-3/8 | 2-1/2 |
| | 9 - 3 | 3-1/2 | 3 | 3-1/8 | 3 |
| 70.0 | 5 - 0 | 3-3/8 | 1-1/2 | 3-3/8 | 1-1/2 |
| | 7 - 0 | 3-3/8 | 2 | 3-3/8 | 2 |
| | 8 - 7 | 3-3/8 | 2-3/4 | 3-3/8 | 2-3/4 |

**NOTES:**

1. SITE SPECIFIC WIND LOAD CALCULATION BY PROFESSIONAL ENGINEER.
2. ENTER TABLE 1 WITH NEGATIVE DESIGN LOAD TO DETERMINE MAX. ALLOWABLE STORM PANEL SPAN. POSITIVE LOADS LESS THAN OR EQUAL TO THE NEGATIVE LOADS ARE ACCEPTABLE.
3. FOR DESIGN LOADS BETWEEN TABULATED VALUES, USE NEXT HIGHER LOAD OR LINEAR INTERPOLATION MAY BE USED TO DETERMINE MAX. ALLOWABLE STORM PANEL SPANS.
4. ENTER TABLE 2 WITH POSITIVE DESIGN LOAD TO DETERMINE MIN. STORM PANEL SEPARATION FROM GLASS.

**TABLE 1** — MAX. ALLOWABLE SOLID AND / OR PERFORATED STORM PANEL SPAN SCHEDULE

| NEG. DESIGN LOAD (P.S.F.) | SPAN (FT - IN) |
|---|---|
| 30.0 | 11 - 0 |
| 35.0 | 10 - 7 |
| 36.5 | 10 - 6 |
| 40.0 | 10 - 3 |
| 45.0 | 10 - 0 |
| 48.0 | 9 - 10 |
| 50.0 | 9 - 9 |
| 51.0 | 9 - 8 |
| 55.0 | 9 - 6 |
| 60.0 | 9 - 3 |
| 62.0 | 9 - 2 |
| 65.0 | 8 - 11 |
| 66.0 | 8 - 11 |
| 70.0 | 8 - 7 |
| 72.0 | 8 - 5 |
| 75.0 | 8 - 1 |
| 80.0 | 7 - 6 |
| 90.0 | 6 - 8 |
| 98.0 | 6 - 2 |
| 100.0 | 6 - 0 |
| 110.0 | 5 - 6 |
| 120.0 | 5 - 0 |
| 130.0 | 4 - 7 |
| 140.0 | 4 - 3 |
| 150.0 | 4 - 0 |
| 160.0 | 3 - 9 |
| 170.0 | 3 - 6 |
| 180.0 | 3 - 4 |
| 200.0 | 3 - 0 |

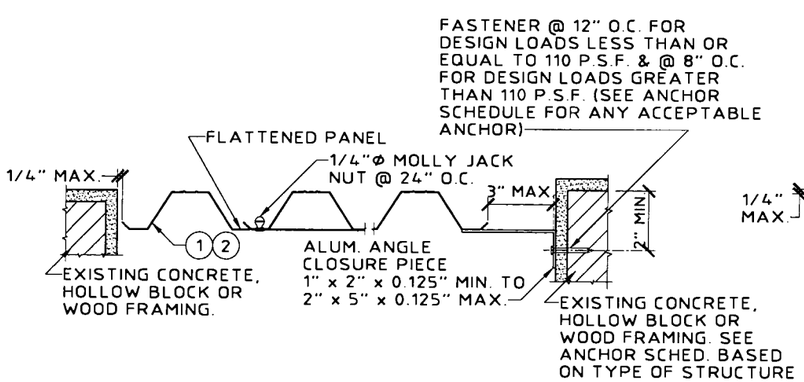


## (M) TRAP MOUNT/BUILD-OUT MOUNT
SCALE: 1-1/2" = 1' - 0"

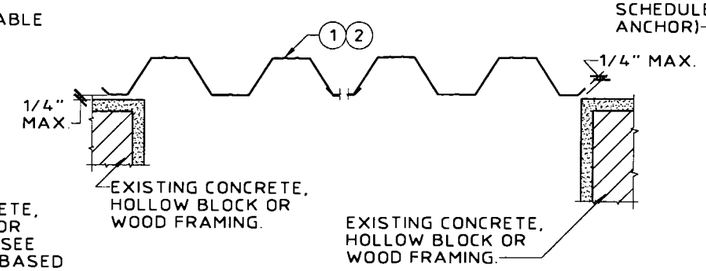


## (N) WALL MOUNT/DIRECT MOUNT
SCALE: 1-1/2" = 1' - 0"

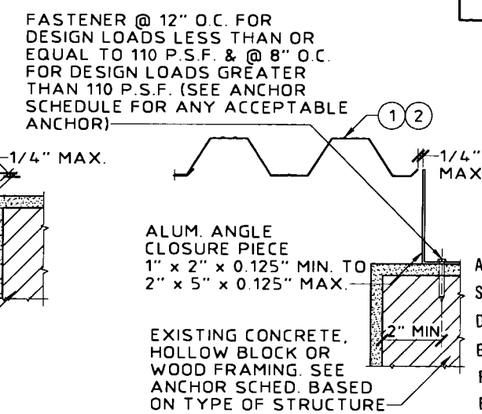


## (P) BUILD-OUT MOUNT
SCALE: 1-1/2" = 1' - 0"

APPROVED AS COMPLYING WITH THE SOUTH FLORIDA BUILDING CODE
DATE February 04, 2000
BY Henry A. Martin
PRODUCT CONTROL DIVISION
BUILDING CODE COMPLIANCE OFFICE
ACCEPTANCE NO. 99-1108.04


KNEZEVICH & ASSOCIATES, INC.
CONSULTING ENGINEERS • PRODUCT TESTING
1280 N. UNIVERSITY DRIVE, SUITE 180 • FORT LAUDERDALE, FL 33322
TEL: (954) 382-2800 • FAX: (954) 382-2989
WEBSITE: WWW.KNEZEVICH.COM • E-MAIL: KA@KNEZEVICH.COM


COPYRIGHT © 2000 KNEZEVICH & ASSOCIATES, INC.


0.063" PERFORATED AND SOLID ALUMINUM STORM PANELS

See Thru Shutter Company
10460 N.W. 50th STREET
SUNRISE, FL 33351
TEL(954) 746-5823
FAX(954) 746-4737

revisions

| no | date | by | description |
|---|---|---|---|
| 1 | 12/02/99 | VJK | COUNTY COMMENTS |
| 2 | 01/06/00 | VJK | COUNTY COMMENTS |

V.J. KNEZEVICH
PROFESSIONAL ENGINEER
FL License No: PE 0010983

JAN 06 2000

| | |
|---|---|
| date 10/19/99 | |
| scale AS NOTED | drawn by MC |
| design by VJK | checked by VJK |
| drawing no. 99-340 | |
| sheet 6 of 6 | |

01/06/00 09:50