MIAMI-DADE COUNTY, FLORIDA
METRO-DADE FLAGLER BUILDING

BUILDING CODE COMPLIANCE OFFICE
METRO-DADE FLAGLER BUILDING
140 WEST FLAGLER STREET, SUITE 1603
MIAMI, FLORIDA 33130-1563
(305) 375-2901 FAX (305) 375-2908

CONTRACTOR LICENSING SECTION
(305) 375-2527 FAX (305) 375-2558

CONTRACTOR ENFORCEMENT DIVISION
(305) 375-2966 FAX (305) 375-2908

PRODUCT CONTROL DIVISION
(305) 375-2902 FAX (305) 372-6339

PRODUCT CONTROL NOTICE OF ACCEPTANCE

Andersen Corporation
100 Fourth Avenue North
Bayport ,MN 55003-1096

Your application for Notice of Acceptance (NOA) of:
"Perma Shield Narrowline" Vinyl clad Wood Double Hung Window
under Chapter 8 of the Code of Miami-Dade County governing the use of Alternate Materials and Types of Construction, and completely described herein, has been recommended for acceptance by the Miami-Dade County Building Code Compliance Office (BCCO) under the conditions specified herein.

This NOA shall not be valid after the expiration date stated below. BCCO reserves the right to secure this product or material at any time from a jobsite or manufacturer's plant for quality control testing. If this product or material fails to perform in the approved manner, BCCO may revoke, modify, or suspend the use of such product or material immediately. BCCO reserves the right to revoke this approval, if it is determined by BCCO that this product or material fails to meet the requirements of the South Florida Building Code.

The expense of such testing will be incurred by the manufacturer.

ACCEPTANCE NO.: 99-1210.06
EXPIRES: 06/28/2004

Raul Rodriguez
Chief Product Control Division

THIS IS THE COVERSHEET, SEE ADDITIONAL PAGES FOR SPECIFIC AND GENERAL CONDITIONS
BUILDING CODE & PRODUCT REVIEW COMMITTEE

This application for Product Approval has been reviewed by the BCCO and approved by the Building Code and Product Review Committee to be used in Miami-Dade County, Florida under the conditions set forth above.

Francisco J. Quintana, R.A.
Director
Miami-Dade County
Building Code Compliance Office

APPROVED: 06/28/2001

Andersen Corporation

ACCEPTANCE No.: 99-1210.06

APPROVED : June 28, 2001

EXPIRES : June 28, 2004

NOTICE OF ACCEPTANCE: SPECIFIC CONDITIONS

1. SCOPE

1.1 This approves a wood double hung window, as described in Section 2 of this Notice of Acceptance, designed to comply with the South Florida Building Code (SFBC), 1994 Edition for Miami-Dade County, for the locations where the pressure requirements, as determined by SFBC Chapter 23, do not exceed the Design Pressure Rating values indicated in the approved drawings.

2. PRODUCT DESCRIPTION

2.1 The **Series "Perma-Shield Narroline" Vinyl clad Double Hung Wood Window** and its components shall be constructed in strict compliance with the following documents: Drawing No **Dade-25001**, titled "Unit, PSNL Double Hung" Sheets 1 through 2 of 2 prepared by manufacturer, dated 12-1-99 and last revised on 1-15-01, bearing the Miami-Dade County Product Control approval stamp with the Notice of Acceptance number and approval date by the Miami-Dade County Product Control Division. These documents shall hereinafter be referred to as the approved drawings.

3. LIMITATIONS

3.1 This approval applies to single unit applications only, as shown in approved drawings.

4. INSTALLATION

4.1 The wood double hung window and its components shall be installed in strict compliance with the approved drawings.

4.2 Hurricane protection system (shutters): the installation of this unit **will require** a hurricane protection system.

5. LABELING

5.1 Each unit shall bear a permanent label with the manufacturer's name or logo, city, state and following statement: "Miami-Dade County Product Control Approved".

6. BUILDING PERMIT REQUIREMENTS

6.1 Application for building permit shall be accompanied by copies of the following:

6.1.1 This Notice of Acceptance

6.1.2 Duplicate copies of the approved drawings, as identified in Section 2 of this Notice of Acceptance, clearly marked to show the components selected for the proposed installation.

6.1.3 Any other documents required by the Building Official or the South Florida Building Code (SFBC) in order to properly evaluate the installation of this system.

Ishaq I. Chanda

Ishaq I. Chanda, P.E. Product Control Examiner
Product Control Division

Andersen Corporation

ACCEPTANCE No.: 99-1210.06

APPROVED : June 28, 2001

EXPIRES : June 28, 2004

NOTICE OF ACCEPTANCE: STANDARD CONDITIONS

1. Renewal of this Acceptance (approval) shall be considered after a renewal application has been filed and the original submitted documentation, including test supporting data, engineering documents, are no older than eight (8) years.

2. Any and all approved products shall be permanently labeled with the manufacturer's name, city, state, and the following statement: "Miami-Dade County Product Control Approved", or as specifically stated in the specific conditions of this Acceptance.

3. Renewals of Acceptance will not be considered if:
   a) There has been a change in the South Florida Building Code affecting the evaluation of this product and the product is not in compliance with the code changes;
   b) The product is no longer the same product (identical) as the one originally approved;
   c) If the Acceptance holder has not complied with all the requirements of this acceptance, including the correct installation of the product;
   d) The engineer who originally prepared, signed and sealed the required documentation initially submitted is no longer practicing the engineering profession.

4. Any revision or change in the materials, use, and/or manufacture of the product or process shall automatically be cause for termination of this Acceptance, unless prior written approval has been requested (through the filing of a revision application with appropriate fee) and granted by this office.

5. Any of the following shall also be grounds for removal of this Acceptance:
   a) Unsatisfactory performance of this product or process.
   b) Misuse of this Acceptance as an endorsement of any product, for sales, advertising or any other purpose.

6. The Notice of Acceptance number preceded by the words Miami-Dade County, Florida, and followed by the expiration date may be displayed in advertising literature. If any portion of the Notice of Acceptance is displayed, then it shall be done in its entirety.

7. A copy of this Acceptance as well as approved drawings and other documents, where it applies, shall be provided to the user by the manufacturer or its distributors and shall be available for inspection at the job site at all time. The engineer need not reseal the copies.

8. Failure to comply with any section of this Acceptance shall be cause for termination and removal of Acceptance.

9. This Notice of Acceptance consists of pages 1, 2 and this last page 3.

Ishaq I. Chanda

Ishaq I. Chanda, P.E. Product Control Examiner
Product Control Division

END OF THIS ACCEPTANCE

Andersen Corporation

ACCEPTANCE No.: 99-1210.06

APPROVED : June 28, 2001

EXPIRES : June 28, 2004

NOTICE OF ACCEPTANCE: EVIDENCE SUBMITTED

(For File ONLY. Not part of NOA.)

A. DRAWINGS

1. Manufacturer's parts and section drawings.
2. Drawing No. **Dade-25001**, titled "Unit, PSNL Double Hung" Sheets 1 through 2 of 2 prepared by manufacturer, dated 12-1-99 and last revised on 1-15-01.

B. TESTS

1. Test reports on 1) Air Infiltration Test, per PA 202-94
   2) Uniform Static Air Pressure Test, Loading per PA 202-94
   3) Water Resistance Test, per PA 202-
   4) Forced Entry Test, per SFBC 3603.2 (b) and PA 202-94

   Along with marked-up drawings and installation diagram of double hung window, prepared by Architectural Testing, Inc., Test Report No. **ATI-02-31516.01** and ATI-**02-31517.01**, both dated June 29, 1999, signed and sealed by Alan N. Reeves, P.E.
   (Note: Test report ATI-**02-31516.01,** revised by addendum letter dated 18 November 1999, and the test reports **ATI-02-31516.01** and ATI-**02-31517.01,** further revised by addendum letter dated 26 May 2000 signed and sealed by Alan N. Reeves, P.E, properly marked-up drawings for test reports **ATI-02-31516.01** and ATI-**02-31517.01** were also revised by the laboratory)

C. CALCULATIONS

1. Anchor Verification Calculations dated November 02 1999 and revised on 05-21-00, prepared, signed and sealed by Richard Boyette, P.E.

D. MATERIAL CERTIFICATIONS

1. Tensile test reports No. **ARR-03-02-01** dated April 06, 2001, per ASTM D-638-96a, issued by ASPHALT Technologies for 4500 Hrs Xenon Arch exposed sample, Terraton Vinyl (Sample ID 1030.71-74), issued to Aspen Research Corporation, signed and sealed by Charles L. Thomas, P.E.
2. Tensile test reports No. **MTS 520652** dated June 12, 2000, per ASTM D-638-96a, issued by Celotex Corporation for controlled sample ID, Terraton Vinyl, issued to Aspen Research Corporation, signed and sealed by R. G. Miller, P.E.
3. Tensile test reports No. **ARR-03-02-01** dated April 06, 2001, per ASTM D-638-96a, issued by ASPHALT Technologies for 4500 Hrs Xenon Arch exposed sample, White AW 101 Vinyl (Sample ID 1030.60-63), issued to Aspen Research Corporation, signed and sealed by Charles L. Thomas, P.E.
4. Tensile test reports No. **MTS 520652** dated June 12, 2000, per ASTM D-638-96a, issued by Celotex Corporation for controlled sample ID, White AW 101 Vinyl, issued to Aspen Research Corporation, signed and sealed by R. G. Miller, P.E.
5. Tensile test reports No. **ARR-03-02-01** dated April 06, 2001, per ASTM D-638-96a, issued by ASPHALT Technologies for 4500 Hrs Xenon Arch exposed sample, White capped Fibrex (Sample ID 1030.82-85), issued to Aspen Research Corporation, signed & sealed by Charles L. Thomas, P.E.
6. Tensile test reports No. **MTS 520652** dated June 12, 2000, per ASTM D-638-96a, issued by Celotex Corporation for controlled sample ID, White capped Fibrex, issued to Aspen Research Corporation, signed and sealed by R. G. Miller, P.E.

Ishaq I. Chanda

Ishaq I. Chanda, P.E. Product Control Examiner
Product Control Division

Andersen Corporation

ACCEPTANCE No.: 99-1210.06

APPROVED : June 28, 2001

EXPIRES : June 28, 2004

NOTICE OF ACCEPTANCE: EVIDENCE SUBMITTED

(For File ONLY. Not part of NOA.)

D. MATERIAL CERTIFICATIONS

7. Tensile test reports No. **ARR-03-02-01** dated April 06, 2001, per ASTM D-638-96a, issued by ASPHALT Technologies for 4500 Hrs Xenon Arch exposed sample, Terraton capped Fibrex (Sample ID 1030.93-96), issued to Aspen Research Corporation, signed and sealed by Charles L. Thomas, P.E.
8. Tensile test reports No. **MTS 520652** dated June 12, 2000, per ASTM D-638-96a, issued by Celotex Corporation for controlled sample ID, Terraton capped Fibrex, issued to Aspen Research Corporation, signed and sealed by R. G. Miller, P.E
9. Photo copy Test reports No. J98002653-004 for "self ignition temperature" per ASTMD1929-96 dated April 27, 1998 for PVC plastic material issued to Andresen Corporation issued by ITS Intertek Testing Service, signed by Amy L. Rice.
10. Photocopy Test reports No. J98002651-004 for "Surface Burning Characteristics of Building Materials" per ASTM-E84-97a, dated April 06, 1998, for PVC plastic material issued to Andresen Corporation, issued by ITS Intertek Testing Service, signed by Tim Allen.
11. Photocopy Test reports No. 10865.1 for "Rate of Burning" per ASTM-D635-81, dated April 18, 1984, for PVC plastic material issued to Andresen Corporation, issued by SpringBorn Testing Institute, signed by George T. Forbes.
12. Photocopy Test reports No. Geon 85857 for "shear strength" per ASTM-D732-99, dated November 06, 2000, for PVC extrusion issued to Geon Company, issued by Poly One Corporation, signed by William P. Baran
13. Photocopy Test reports No. FA14407 for "Xenon Arch Accelerated Weathering" per ASTM-G-26, dated June 26, 2000, for 34 plastic material issued to Andresen Corporation, issued by ATLAS, South Florida Testing Service, signed by Oscar L. Cordo.

E. STATEMENTS

1. Statement letter of conformance, dated November 22, 1999, signed and sealed by Richar Boyette, P.E.
2. Statement letter of no financial interest, dated May 27, 2000, signed and sealed by Richard Boyette, P.E.
3. Laboratory compliance letter for test report dated 07 September1999, Test reports No. **ATI-02-31516.01** and, **ATI-02-31517.01** signed and sealed by Allen N. Reeves, P.E.
4. Facsimile letter dated 06, June 2001.issued by Andersen Corporation, stating Aspen Research corporation, as subsidiary of the Andersen Corporation, signed by Cindy Berger.

F. OTHER

1. This system to be checked for compliance to ASTM-1300 at the time of renewal or revisions.

Ishaq I. Chanda

Ishaq I. Chanda, P.E. Product Control Examiner
Product Control Division

SIZE DESIGNATION	UNIT DIM."H" ±.094	UNIT DIM."W" ±.094	SASH UPPER DIM."A" ±.031	SASH UPPER DIM."C" ±.031	SASH LOWER DIM."B" ±.031	SASH LOWER DIM."C" ±.031	GLASS DIM. HEIGHT	GLASS DIM. WIDTH	DAYLIGHT OPENING HEIGHT	DAYLIGHT OPENING WIDTH
3862	77.258	45.625	37.015	43.812	37.811	43.812	34.969	41.438	33.968	40.436
3856	69.258		33.015		33.811		30.969		29.968	
3852	65.258		31.015		31.811		28.969		27.968	
3846	57.258		27.015		27.811		24.969		23.968	
3842	53.258		25.015		25.811		22.969		21.968	
38310	49.258		23.015		23.811		20.969		19.968	
3832	41.258		19.015		19.811		16.969		15.968	
38210	37.258		17.015		17.811		14.969		13.968	
3462	77.258	41.625	37.015	39.812	37.811	39.812	34.969	37.438	33.968	36.436
3456	69.258		33.015		33.811		30.969		29.968	
3452	65.258		31.015		31.811		28.969		27.968	
3446	57.258		27.015		27.811		24.969		23.968	
3442	53.258		25.015		25.811		22.969		21.968	
34310	49.258		23.015		23.811		20.969		19.968	
3432	41.258		19.015		19.811		16.969		15.968	
34210	37.258		17.015		17.811		14.969		13.968	
3062	77.258	37.625	36.984	35.812	37.811	35.812	34.969	33.438	33.968	32.436
3056	69.258		32.984		33.811		30.969		29.968	
3052	65.258		30.984		31.811		28.969		27.968	
3046	57.258		26.984		27.811		24.969		23.968	
3042	53.258		24.984		25.811		22.969		21.968	
30310	49.258		22.984		23.811		20.969		19.968	
3032	41.258		18.984		19.811		16.969		15.968	
30210	37.258		16.984		17.811		14.969		13.968	
2862	77.258	33.625	36.984	31.812	37.811	31.812	34.969	29.438	33.968	28.436
2856	69.258		32.984		33.811		30.969		29.968	
2852	65.258		30.984		31.811		28.969		27.968	
2846	57.258		26.984		27.811		24.969		23.968	
2842	53.258		24.984		25.811		22.969		21.968	
28310	49.258		22.984		23.811		20.969		19.968	
2832	41.258		18.984		19.811		16.969		15.968	
28210	37.258		16.984		17.811		14.969		13.968	
2462	77.258	29.625	36.984	27.812	37.811	27.812	34.969	25.438	33.968	24.436
2456	69.258		32.984		33.811		30.969		29.968	
2452	65.258		30.984		31.811		28.969		27.968	
2446	57.258		26.984		27.811		24.969		23.968	
2442	53.258		24.984		25.811		22.969		21.968	
24310	49.258		22.984		23.811		20.969		19.968	
2432	41.258		18.984		19.811		16.969		15.968	
24210	37.258		16.984		17.811		14.969		13.968	
2062	77.258	25.625	36.984	23.812	37.811	23.812	34.969	21.438	33.968	20.436
2056	69.258		32.984		33.811		30.969		29.968	
2052	65.258		30.984		31.811		28.969		27.968	
2046	57.258		26.984		27.811		24.969		23.968	
2042	53.258		24.984		25.811		22.969		21.968	
20310	49.258		22.984		23.811		20.969		19.968	
2032	41.258		18.984		19.811		16.969		15.968	
20210	37.258		16.984		17.811		14.969		13.968	
1862	77.258	21.625	36.984	19.812	37.811	19.812	34.969	17.438	33.968	16.436
1856	69.258		32.984		33.811		30.969		29.968	
1852	65.258		30.984		31.811		28.969		27.968	
1846	57.258		26.984		27.811		24.969		23.968	
1842	53.258		24.984		25.811		22.969		21.968	
18310	49.258		22.984		23.811		20.969		19.968	
1832	41.258		18.984		19.811		16.969		15.968	
18210	37.258		16.984		17.811		14.969		13.968	

SIZE DESIGNATION	DP RATINGS (PSF)
3862	+50/−70
3856	+50/−70
3852	+50/−70
3846	+50/−70
3842	+50/−70
38310	+50/−70
3832	+50/−70
38210	+50/−70
3462	+50/−70
3456	+50/−70
3452	+50/−70
3446	+50/−70
3442	+50/−70
34310	+50/−70
3432	+50/−70
34210	+50/−70
3062	+50/−70
3056	+50/−70
3052	+50/−70
3046	+50/−70
3042	+50/−70
30310	+50/−70
3032	+50/−70
30210	+50/−70
2862	+50/−70
2856	+50/−70
2852	+50/−70
2846	+50/−70
2842	+50/−70
28310	+50/−70
2832	+50/−70
28210	+50/−70
2462	+50/−70
2456	+50/−70
2452	+50/−70
2446	+50/−70
2442	+50/−70
24310	+50/−70
2432	+50/−70
24210	+50/−70
2062	+50/−70
2056	+50/−70
2052	+50/−70
2046	+50/−70
2042	+50/−70
20310	+50/−70
2032	+50/−70
20210	+50/−70
1862	+50/−70
1856	+50/−70
1852	+50/−70
1846	+50/−70
1842	+50/−70
18310	+50/−70
1832	+50/−70
18210	+50/−70

• INDICATES TESTED UNITS

FRAME FASTENERS LIST		
A/R	1-5/8" ROOFING NAILS	FASTENES UNIT TO BUCK THROUGH FLANGES
3-5	SCREW, 7-19 X 1-1/2"	FASTENENS SILL STOPS TO SILL AND EACHOTHER
BEAD	SEALANT	FASTENES SILL STOPS TO SILL AND EACHOTHER
BEAD	SEALANT	FASTENES GLASS INTO SASH UNITS
BEAD	ADHESIVE	FASTENENS OUTER FRAME TO INNER FRAME
BEAD	SEALANT	FASTENENS HEAD JAMB LINER TO OUTER FRAME
QTY.	DESCRIPTION	LOCATION

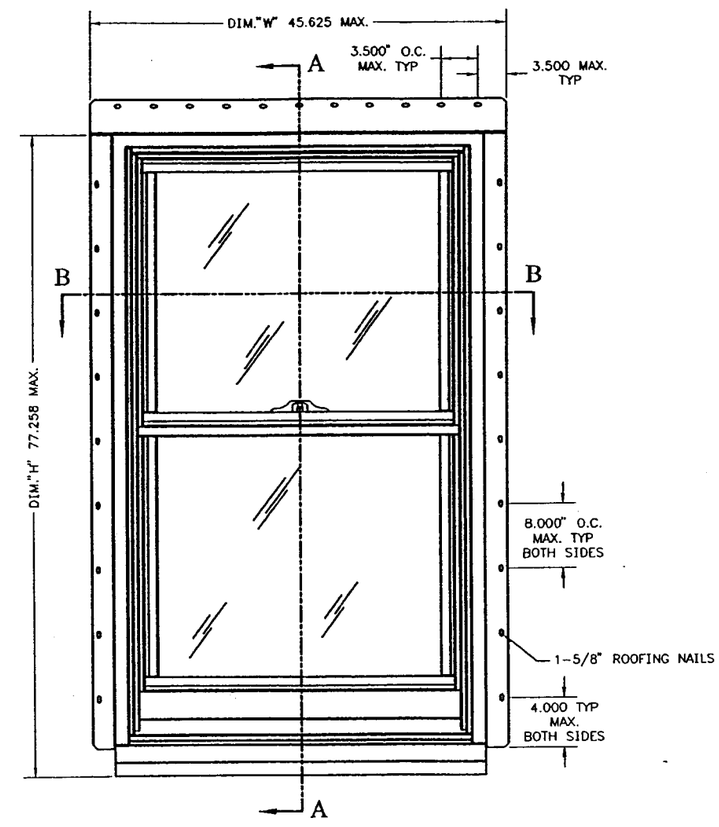

NOTES:

1. INSTALLATION METHODS:
   THE WINDOW WAS INSTALLED WITHIN A 2" X 6" WOOD BUCK AND FASTENED TO THE BUCK THROUGH THE NAILING FLANGES USING 1-5/8" ROOFING NAILS.

2. STRUCTURAL DESIGN PRESSURE RATINGS ARE +50/−70 PSF.

3. GLAZING SPECIFICATIONS:
   THE SASH UTILIZED NOMINAL 5/8" INSULATING GLASS FABRICATED FROM A 3/32" THICK HEAT-STRENGHENED INNER LITE AND A 3/32" THICK HEAT-STRENGTHENED OUTER LITE IN A .450" DESICCANT-FILLED SPACER SYSTEM, SET FROM THE INTERIOR AGAINST SILICONE BACKBEDDING. AN INTERLOCKING DUAL-DUROMETER VINYL GLAZING BEAD WAS USED ON THE EXTERIOR.

4. FRAME CONSTRUCTION:
   TWO #8 X 1-1/2" FL HD SCREWS SECURE JAMBS TO SILL (PER CORNER). ONE #8-18 X 2-1/4" PH FL SCREW SECURES THE SILL THE THE OUTER FRAME MEMBER (PER CORNER). TWO .133 X 2-3/8 NAILS SECURE THE HEAD JAMB TO THE SIDE JAMB (PER CORNER). ONE .133 X 2-3/8" NAIL SECURES THE SIDE JAMBS TO THE HEAD JAMBS (PER CORNER).

5. GLASS BITE = .500".

APPROVED AS COMPLYING WITH THE
SOUTH FLORIDA BUILDING CODE
DATE JUNE 28, 2001
BY Ishaq I. Chunde
PRODUCT CONTROL DIVISION
BUILDING CODE COMPLIANCE OFFICE
ACCEPTANCE NO. 99-1210.06

REVISION	
C	1/15/01
B	3/30/00
A	12/1/99

TITLE
UNIT, PSNL DOUBLE HUNG

Andersen Corporation
Bayport, Minnesota 55003

THESE DRAWINGS ARE PROVIDED AS A SERVICE BY ANDERSEN CORPORATION FOR THE BENEFIT OF ITS CUSTOMERS. FINAL RESPONSIBILITY FOR ACCURACY OF DESIGN, FINAL SPECIFICATIONS, DRAWINGS AND FOR THE ACTUAL INSTALLATION SUGGESTED BY THESE DRAWINGS LIES WITH THE ARCHITECT, ENGINEER AND/OR CONTRACTOR.

COPYRIGHT ANDERSEN CORPORATION 1998. ALL RIGHTS RESERVED.

APPROVE/DATE 1/15/01

SHT. 1 OF 2

DRAWING NUMBER
DADE-25001

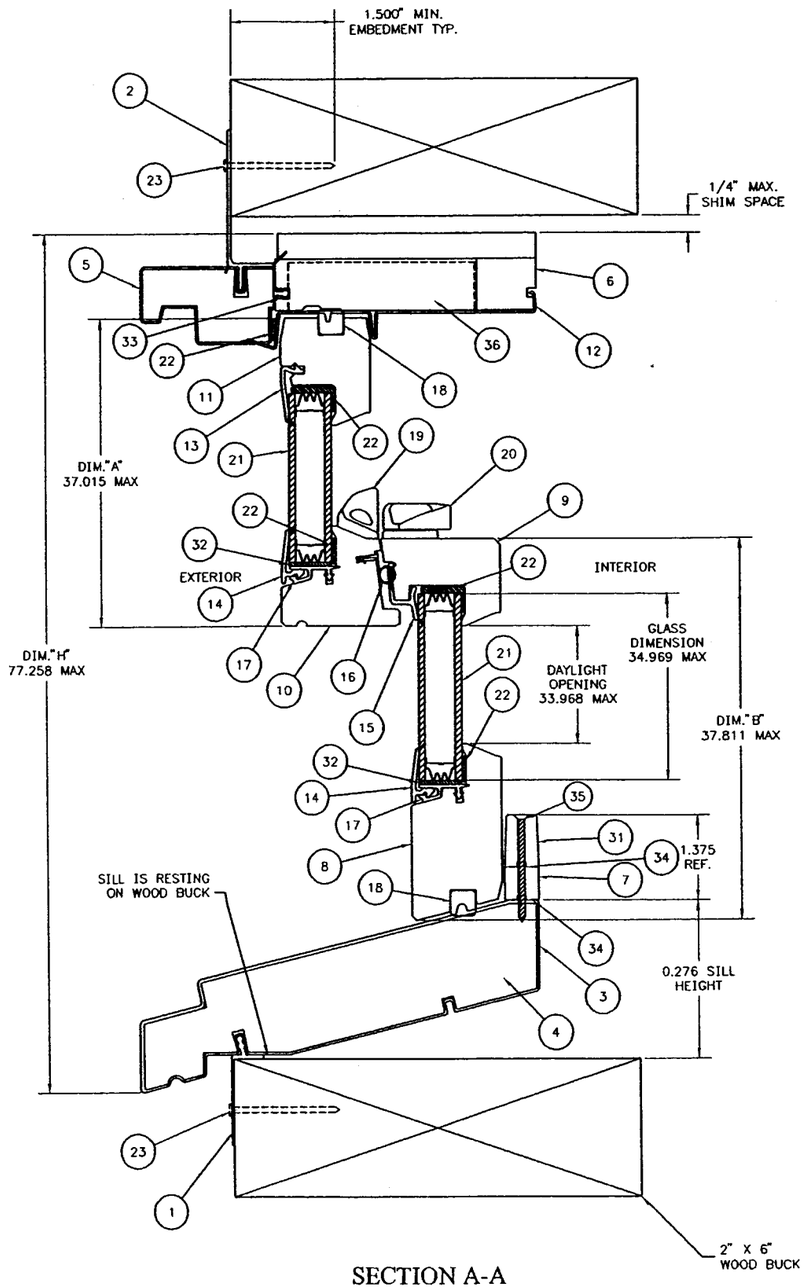

SECTION A-A

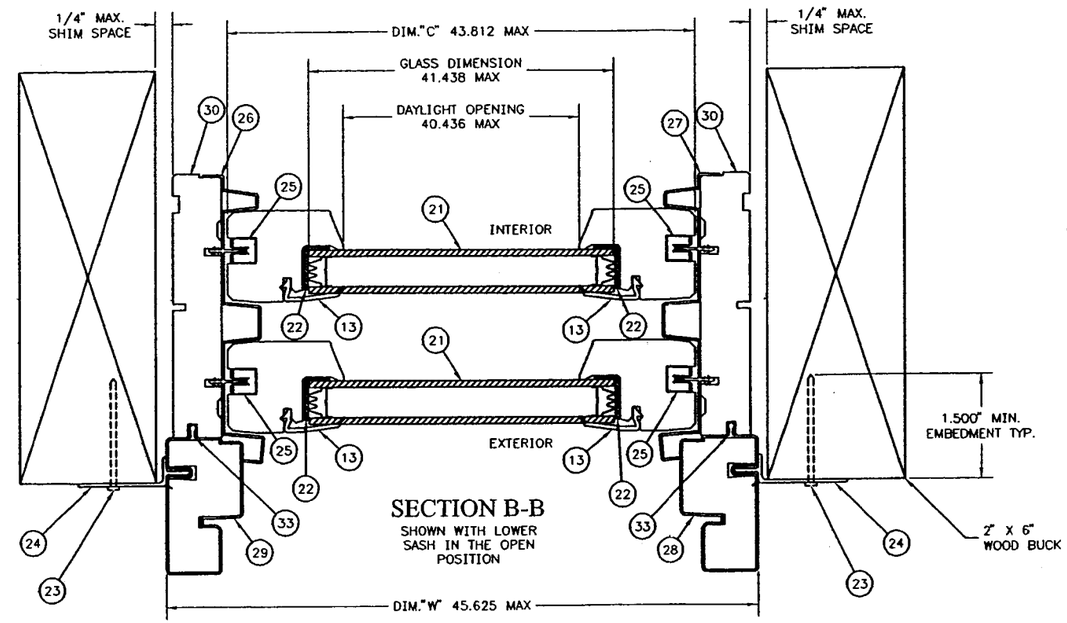

SECTION B-B
SHOWN WITH LOWER SASH IN THE OPEN POSITION

ITEM NO.	DESCRIPTION	PART	MATERIAL	HEIGHT	WIDTH
36	BALANCER	20015	GALVANIZED	6.808	2.961
35	SCREW, 7-19 X 1-1/2	20206	GALVANIZED	1.500	–
34	SEALANT, HB FULLER 0606	MDS0028	–	–	–
33	ADHESIVE, HENKEL MACROMELT 6224	MDA0005	–	–	–
32	SPACER, GLASS	20065	PVC	0.625	0.062
31	STOP, SILL DP UPGRADE	20205	WOOD-PINE	0.750	0.500
30	JAMB, PROFILE SIDE	29135	WOOD-PINE	0.719	3.844
29	OUTER FRAME MEMBER-SIDE-LH	20238	WOOD/PVC	2.187	1.125
28	OUTER FRAME MEMBER-SIDE-RH	20237	WOOD/PVC	2.187	1.125
27	LINER, SIDE JAMB RH	20294	PVC	0.892	4.209
26	LINER, SIDE JAMB LH	20293	PVC	0.892	4.209
25	W/S, STILE	20056	POLYPROPYLENE	0.178	1.123
24	STILE, NAILING FLANGE	29090	PVC REGRIND	1.644	0.430
23	NAIL, 1-5/8 8d ROOFING	–	STEEL	1.625	0.140
22	SEALANT, SILICONE GE 2821	MDS0009	–	–	–
21	GLASS 5/8", INSULATED	00009	–	–	–
20	LOCK, FLUSHMOUNT	24570	PLASTIC	0.531	3.480
19	KEEPER	24533	PLASTIC	0.745	3.487
18	W/S, RAIL	20057	FOAM/PVC	0.375	0.375
17	LINER, RAIL 5/8	20150	PVC	0.257	0.774
16	BULB, UPPER CHECK RAIL	20171	SANTOPRENE	0.522	0.481
15	BEAD, LOWER CHECK RAIL	24327/24328	PVC/CPVC	–	–
14	BEAD, UPPER CHECK/BOTTOM RAIL	20153	PVC/CPVC	0.859	0.335
13	BEAD, TOP/STILE RAILS	20151	PVC/CPVC	0.992	0.344
12	LINER, HEAD JAMB	29125	PVC	0.828	4.272
11	RAIL, TOP	25090	WOOD-PINE	1.578	1.328
10	RAIL, UPPER CHECK	25066/25091	WOOD-PINE	–	–
9	RAIL, LOWER CHECK	25058	WOOD-PINE	1.281	1.766
8	RAIL, BOTTOM	25092	WOOD-PINE	1.328	2.562
7	STOP, SILL	20046	WOOD-PINE	0.484	0.500
6	JAMB, HEAD ASSEMBLY	20012/20013 /20162	WOOD-PINE	–	–
5	HEAD, OUTER FRAME MEMBER	20027	WOOD/PVC	2.187	1.125
4	CORE, SILL	20024	WOOD-PINE	6.296	1.289
3	VINYL, COVER	20023	PVC	6.403	1.500
2	HEAD, NAILING FLANGE	29088	PVC REGRIND	2.344	0.671
1	SILL, WIND BREAK	20025	PVC REGRIND	1.593	0.469

PART REFERANCE LIST

ALL PARTS MANUFACTURED TO ANDERSEN SPECIFICATION AS NOTED BY ABOVE PART NUMBERS

REVISION	
C	1/15/01
B	3/30/00
A	12/1/99

APPROVED AS COMPLYING WITH THE SOUTH FLORIDA BUILDING CODE
DATE June 28, 2001
BY Ishay I. Chanda
PRODUCT CONTROL DIVISION
BUILDING CODE COMPLIANCE OFFICE
ACCEPTANCE NO. 99-1210.06

TITLE
UNIT, PSNL DOUBLE HUNG

Andersen Corporation
Bayport, Minnesota 55003

THESE DRAWINGS ARE PROVIDED AS A SERVICE BY ANDERSEN CORPORATION FOR THE BENEFIT OF ITS CUSTOMERS. FINAL RESPONSIBILITY FOR ACCURACY OF DESIGN, FINAL SPECIFICATIONS, DRAWINGS AND FOR THE ACTUAL INSTALLATION SUGGESTED BY THESE DRAWINGS LIES WITH THE ARCHITECT, ENGINEER AND/OR CONTRACTOR.

COPYRIGHT ANDERSEN CORPORATION 1998. ALL RIGHTS RESERVED.

APPROVE/DATE 1/15/01
DRAWING NUMBER DADE-25001
SHT. 2 OF 2