MIAMI-DADE

MIAMI-DADE COUNTY, FLORIDA
METRO-DADE FLAGLER BUILDING

BUILDING CODE COMPLIANCE OFFICE
METRO-DADE FLAGLER BUILDING
140 WEST FLAGLER STREET, SUITE 1603
MIAMI, FLORIDA 33130-1563
(305) 375-2901 FAX (305) 375-2908

CONTRACTOR LICENSING SECTION
(305) 375-2527 FAX (305) 375-2558

CONTRACTOR ENFORCEMENT SECTION
(305) 375-2966 FAX (305) 375-2908

PRODUCT CONTROL DIVISION
(305) 375-2902 FAX (305) 372-6339

PRODUCT CONTROL NOTICE OF ACCEPTANCE

General Products, Co., Inc.
P.O. Box 7387
Fredericksburg VA 22408

Your application for Product Approval of:
"Landmark" Outswing Opaque Residential Insulated Steel Doors w/Sidelites-Impact
under Chapter 8 of the Code of Miami-Dade County governing the use of Alternate Materials and Types of Construction, and completely described herein, has been recommended for acceptance by the Miami-Dade County Building Code Compliance Office (BCCO) under the conditions specified herein.

This approval shall not be valid after the expiration date stated below. BCCO reserves the right to secure this product or material at anytime from a jobsite or manufacturer's plant for quality control testing.
If this product or material fails to perform in the approved manner, BCCO may revoke, modify, or suspend the use of such product or material immediately. BCCO reserves the right to revoke this approval, if it is determined BCCO that this product or material fails to meet the requirements of the South Florida Building Code.

The expense of such testing will be incurred by the manufacturer.

Acceptance No.: 99-1220.03

Expires: 06/15/2003

Raul Rodriguez
Chief Product Control Division

THIS IS THE COVERSHEET, SEE ADDITIONAL PAGES FOR SPECIFIC AND GENERAL CONDITIONS

BUILDING CODE & PRODUCT REVIEW COMMITTEE

This application for Product Approval has been reviewed by the BCCO and approved by the Building Code and Product Review Committee to be used in Dade County, Florida under the conditions set forth above.

Francisco J. Quintana, R.A.
Director
Miami-Dade County
Building Code Compliance Office

Approved: 06/15/2000

Internet mail address: postmaster@buildingcodeonline.com **Homepage: http://www.buildingcodeonline.com**

NOTICE OF ACCEPTANCE: SPECIFIC CONDITIONS

1. SCOPE

1.1 This approves a residential steel door system, as described in Section 2 of this Notice of Acceptance, designed to comply with the South Florida Building Code (SFBC), 1994 Edition for Miami-Dade County, for the locations where the pressure requirements, as determined by SFBC Chapter 23, do not exceed the Design Pressure Rating values indicated in the approved drawings.

2. PRODUCT DESCRIPTION

2.1 The **"Landmark" Opaque Outswing Residential Insulated Steel Doors w/Sidelites - Impact Resistant** and its components shall be constructed in strict compliance with the following documents: Drawing No **S-2002**, titled "Landmark Steel Edge Insulated Steel Door with Wood Frame", Sheets 1 through 6 of 6, prepared by Rick Wright Building Consulting, Inc. dated 2/24/00, with revision #1 dated 5/18/00, bearing the Miami-Dade County Product Control approval stamp with the Notice of Acceptance number and approval date by the Miami-Dade County Product Control Division. These documents shall hereinafter be referred to as the approved drawings.

3. LIMITATIONS

3.1 This approval applies to single unit applications of pair of doors and single door with and without sidelites, as shown in approved drawings. Single door units shall include all components described in the active leaf of this approval.

3.2 Unit with "Barrier Free" threshold shall be installed only at locations protected by a canopy or overhang such that the angle between the edge of canopy or overhang to sill is less than 45 degrees. Unless unit is installed in non-habitable areas where the unit and the area are designed to accept water infiltration.

4. INSTALLATION

4.1 The residential steel door system and its components shall be installed in strict compliance with the approved drawings.

4.2 Hurricane protection system (shutters):

4.2.1 Door: the installation of this unit **will not require** a hurricane protection system.

4.2.2 Sidelite: the installation of this unit **will require** a hurricane protection system.

5. LABELING

5.1 Each unit shall bear a permanent label with the manufacturer's name or logo, city, state and following statement: "Miami-Dade County Product Control Approved".

6. BUILDING PERMIT REQUIREMENTS

6.1 Application for building permit shall be accompanied by copies of the following:

6.1.1 This Notice of Acceptance.

6.1.2 Duplicate copies of the approved drawings, as identified in Section 2 of this Notice of Acceptance, clearly marked to show the components selected for the proposed installation.

6.1.3 Any other documents required by the Building Official or the South Florida Building Code (SFBC) in order to properly evaluate the installation of this system.

Manuel Perez, P.E. Product Control Examiner
Product Control Division

General Products Co., Inc.

ACCEPTANCE No.: 99-1220.03

APPROVED : JUN 1 5 2000

EXPIRES : JUN 1 5 2003

NOTICE OF ACCEPTANCE: STANDARD CONDITIONS

1. Renewal of this Acceptance (approval) shall be considered after a renewal application has been filed and the original submitted documentation, including test supporting data, engineering documents, are no older than eight (8) years.

2. Any and all approved products shall be permanently labeled with the manufacturer's name, city, state, and the following statement: "Miami-Dade County Product Control Approved", or as specifically stated in the specific conditions of this Acceptance.

3. Renewals of Acceptance will not be considered if:
   a) There has been a change in the South Florida Building Code affecting the evaluation of this product and the product is not in compliance with the code changes;
   b) The product is no longer the same product (identical) as the one originally approved;
   c) If the Acceptance holder has not complied with all the requirements of this acceptance, including the correct installation of the product;
   d) The engineer who originally prepared, signed and sealed the required documentation initially submitted is no longer practicing the engineering profession.

4. Any revision or change in the materials, use, and/or manufacture of the product or process shall automatically be cause for termination of this Acceptance, unless prior written approval has been requested (through the filing of a revision application with appropriate fee) and granted by this office.

5. Any of the following shall also be grounds for removal of this Acceptance:
   a) Unsatisfactory performance of this product or process.
   b) Misuse of this Acceptance as an endorsement of any product, for sales, advertising or any other purpose.

6. The Notice of Acceptance number preceded by the words Miami-Dade County, Florida, and followed by the expiration date may be displayed in advertising literature. If any portion of the Notice of Acceptance is displayed, then it shall be done in its entirety.

7. A copy of this Acceptance as well as approved drawings and other documents, where it applies, shall be provided to the user by the manufacturer or its distributors and shall be available for inspection at the job site at all time. The engineer need not reseal the copies.

8. Failure to comply with any section of this Acceptance shall be cause for termination and removal of Acceptance.

9. This Notice of Acceptance consists of pages 1, 2 and this last page 3.

Manuel Perez

Manuel Perez, P.E. Product Control Examiner
Product Control Division

END OF THIS ACCEPTANCE

LANDMARK

OUTSWING INSULATED STEEL DOOR WITH WOOD FRAMES

GENERAL NOTES

1. THIS PRODUCT IS DESIGNED TO MEET THE SOUTH FLORIDA BUILDING CODE 1994 EDITION FOR MIAMI–DADE COUNTY.
2. WOOD BUCKS BY OTHERS, MUST BE ANCHORED PROPERLY TO TRANSFER LOADS TO THE STRUCTURE.
3. PRODUCT ANCHORS SHALL BE AS LISTED AND SPACED AS SHOWN ON DETAILS. ANCHOR EMBEDMENT TO BASE MATERIAL SHALL BE BEYOND WALL DRESSING OR STUCCO.
4. IMPACT RESISTANT SHUTTERS REQUIRED FOR SIDELITES.
5. DESIGNED PRESSURE RATING SHALL BE AS FOLLOWS: –SEE DESIGN PRESSURE RATING TABLE SHEET ONE.
6. SIDELITES ARE AN OPTION AND CAN BE IN A SINGLE OR DOUBLE CONFIGURATION. (OX, XO, OXO, OXXO)
7. THE ONE–PIECE BARRIER FREE THRESHOLD SYSTEM DOES NOT MEET THE WATER REQUIREMENTS IN MIAMI–DADE COUNTY. THIS SYSTEM WAS TESTED FOR 2.86psf OF WATER PRESSURE AS PER ASTM E–331

RESIDENTIAL INSULATED STEEL DOOR
(Common to all frame conditions)

Door Leaf Construction:

Face sheets: 25 ga. (0.019") minimum thickness, Galvanized steel A–525 commercial quality – AKDQ per ASTM 620 with yield strength Fy(min.)=19,000 psi.

Core design: Polyurethane core, two–parts Isocyanate Resin components foam, with 2.15 lbs. density.

Construction: Flush or embossed type. The vertical edges are extensions of the skin, rolled formed to a mechanical interlock, horizontal edges are welded together at two places each.

Door Frame Construction: The head jambs and side jambs are finger jointed pine and are mortised and joined using 7/8" X 2" wire staples.

Sidelite Panel Construction: Panel is 1 3/8" thick and is constructed from 25ga. (0.019") thick galvanized steel skins. The interior cavity of each sidelite panel is filled with polystyrene (1.0 to 1.25 lb. density).

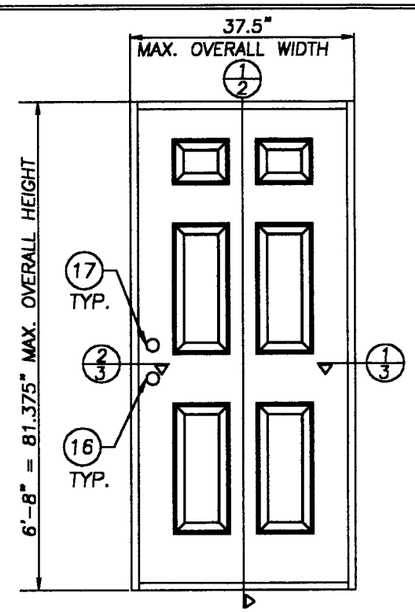

SINGLE DOOR ELEVATION

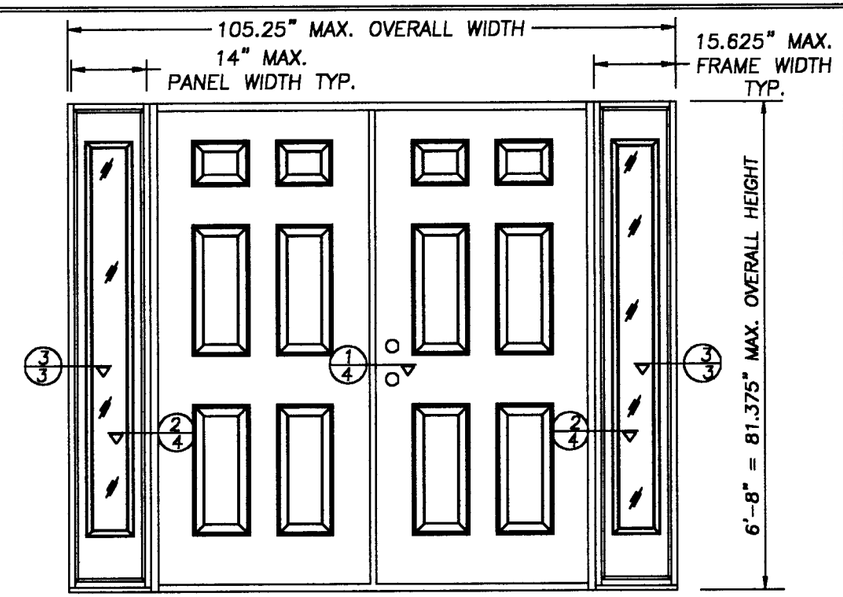

DOUBLE DOOR W/SIDELITES ELEVATION

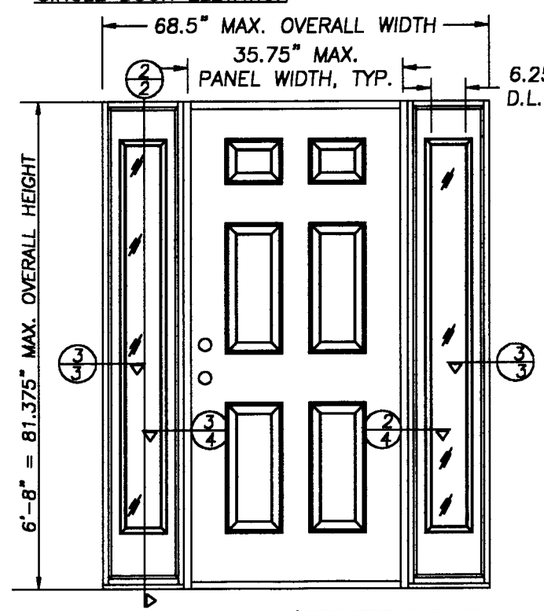

SINGLE DOOR W/SIDELITES ELEVATION

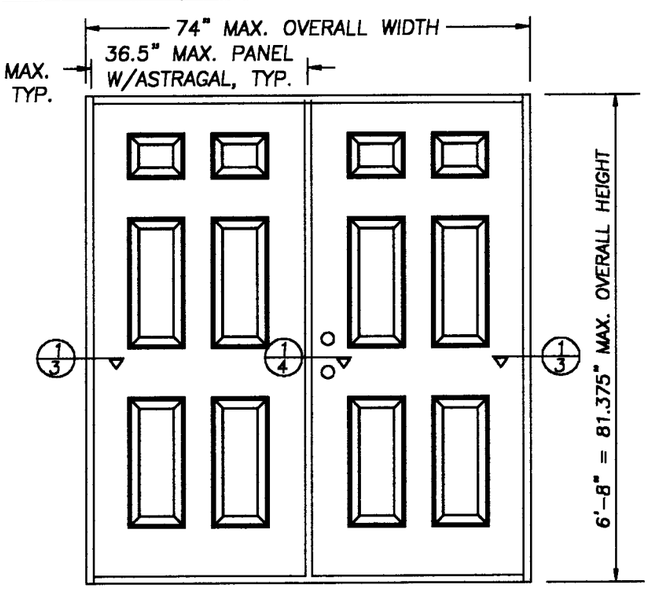

DOUBLE DOOR ELEVATION

COLONIAL 6 PANEL DOOR SHOWN FOR CLARITY OF VIEW (VIEWED INTERIOR)

TABLE OF CONTENTS

SHEET #	DESCRIPTION
1	COMMON (GENERAL NOTES, TYPICAL ELEVATION)
2	VERTICAL CROSS SECTIONS & BILL OF MATERIALS
3	HOIZONTAL CROSS SECTIONS (1/3, 2/3 & 3/3)
4	HOIZONTAL CROSS SECTIONS (1/4, 2/4 & 3/4)
5	ANCHORING LOCATIONS & GLAZING DETAILS
6	ANCHORING LOCATIONS & DOOR MODELS

DESIGN PRESSURE RATING

	WHERE WATER INFILTRATION REQUIREMENT IS NEEDED
POSITIVE	+ 50.0 PSF
NEGATIVE	– 50.0 PSF

APPROVED AS COMPLYING WITH THE SOUTH FLORIDA BUILDING CODE
DATE June 15, 2000
BY Manuel Perez
PRODUCT CONTROL DIVISION
BUILDING CODE COMPLIANCE OFFICE
ACCEPTANCE NO. 99-1220.03

GENERAL PRODUCTS CO. INC.
P.O. BOX 7387
FREDERICKSBURG, VA 22404
PH. (540) 898–5700

PRODUCT: LANDMARK STEEL EDGE INSULATED STEEL DOOR WITH WOOD FRAME

PART OR ASSEMBLY: GENERAL NOTES AND ELEVATIONS

NO.	DATE	REVISIONS	BY
1	5/18/00	GENERAL REVISION	TJH

RW BUILDING CONSULTANTS, INC.
813.684.3831

DATE: 2/24/00
SCALE: N.T.S.
DWG. BY: TJH
CHK. BY: RW
DRAWING NO.: S–2002
SHEET 1 OF 6

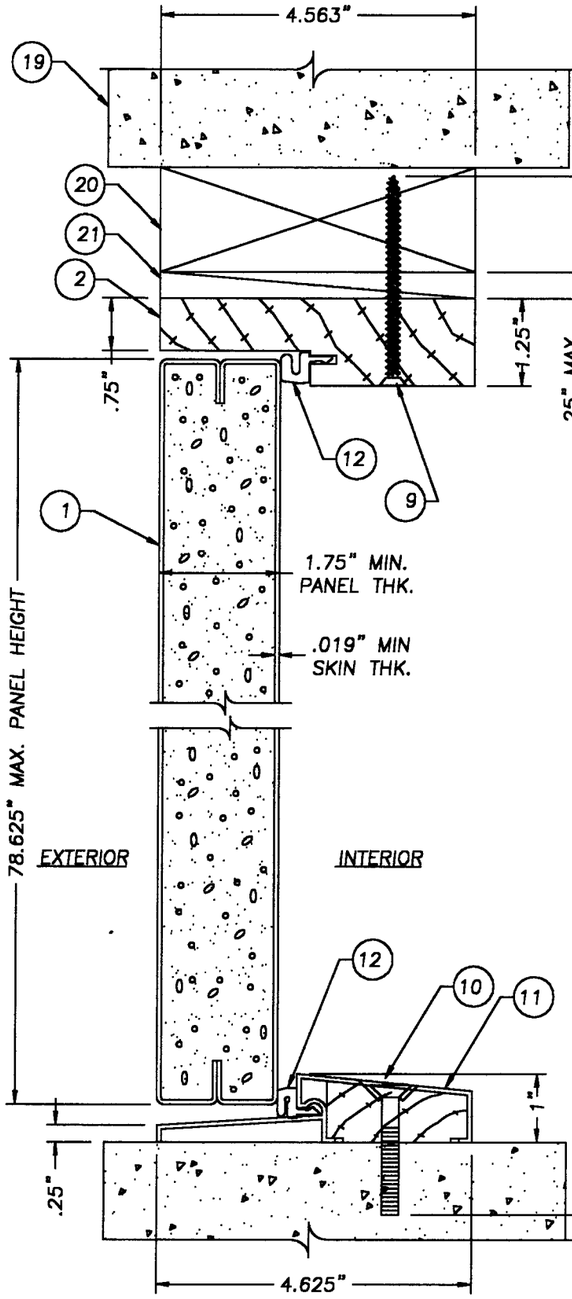

1/2 VERTICAL CROSS-SECTION

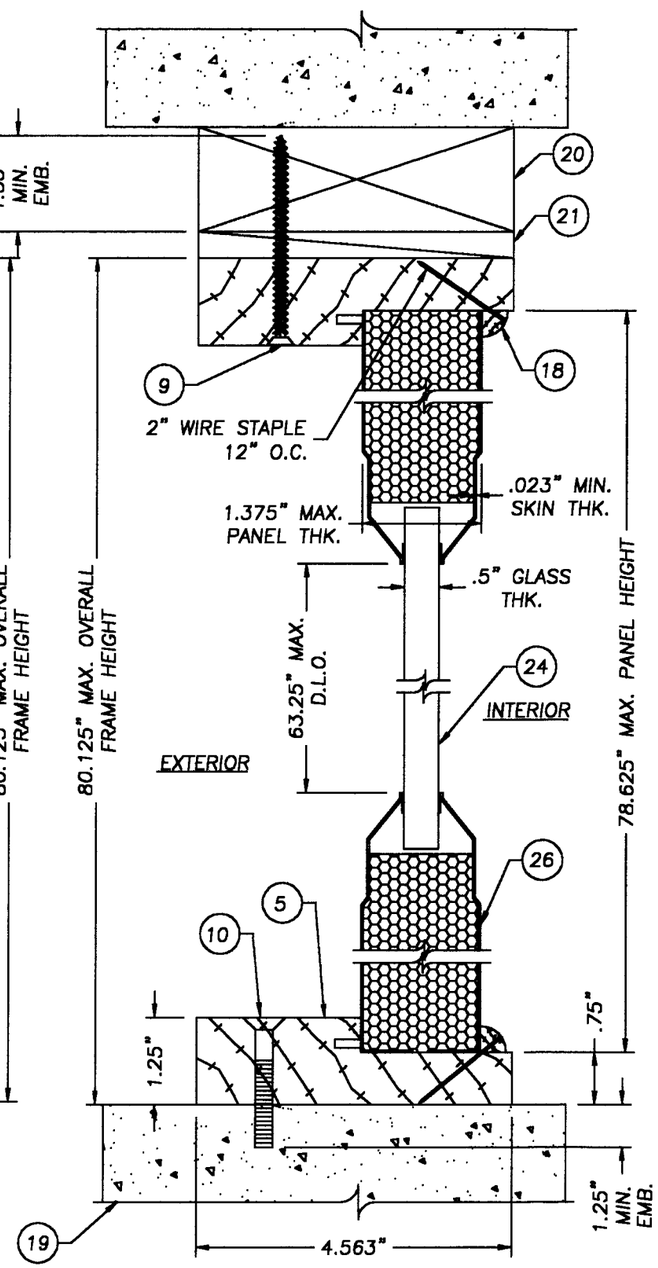

2/2 VERTICAL CROSS-SECTION

Item	DESCRIPTION	Material
1	6-8 LANDMARK DOOR (25GA. .019" MIN.)	STEEL
2	4 9/16" HEADER	WOOD
3	4 9/16" LATCH JAMB	WOOD
4	4 9/16" HINGE JAMB	WOOD
5	4 9/16" BLANK JAMB	WOOD
6	NON-REMOVABLE PIN HINGE G.P. 4" x 4" HINGE PROPRIETARY .097" THK.	STEEL
7	#10 x 5/8" lg. (Hinge to Frame)	STEEL
8	#10 WOOD SCREW X 2 1/2" LG.	STEEL
9	#10 x 3" LG. WOOD SCREW	STEEL
10	3/16" TAPCON ANCHOR (ELCO)	STEEL
11	BUMP FACE OUTSWING THRESHOLD (.0625")	ALUMINUM
12	COMPRESSION WEATHERSTRIP (QDS-650)	
13	HINGE REINFORCEMENT FOR DOOR .050" x 1 1/8" x 5 5/16" L	STEEL
14	#10 x 1 1/4" LG. TYPE "A" FLATHEAD	STEEL
15	#10 WOOD SCREW X 2" LG.-STRIKE (DEADBOLT)	STEEL
16	KWIKSET 200 DL PASSAGE	
17	KWIKSET 660 DEADBOLT	
18	GLAZING STOP (QUARTER ROUND)	WOOD
19	MASONRY WALL	
20	2x or 1x MATERIAL (BUCK)	WOOD
21	MAX. 1/4" SHIM MATERIAL	
22	T-ASTRAGAL (.063" WALL THK.)	ALUMINUM
23	#12 x 1/2"LG. PANHEAD SHEET METAL SCREW (SHT. 4 NOTES FOR SPACING)	STEEL
24	GLAZING, 1/2" INSULATED TEMPERED GLASS	GLASS
25	NOT USED	
26	1 3/8" STAMPED ITEGRAL SIDELITE (.023")	STEEL
27	MAGNETIC WEATHERSRIP	VINYL
28	LOCK BLOCK	WOOD
29	#10 x 1 3/4" WOOD SCREW	STEEL
30	ONE PIECE BARRIER FREE THRESHOLD	ALUMINUM
31	#8 x 2 1/2" LG. PFH WOOD SCREW	STEEL
32	WHITE BUTYL CAULKING TAPE (DRY GLAZED)	–
33	ADJUSTABLE SWEEP	VINYL
34	#8 x 1/2" LG. TYPE "AB" PANHEAD (SHT. 2 NOTES FOR SPACING)	STEEL

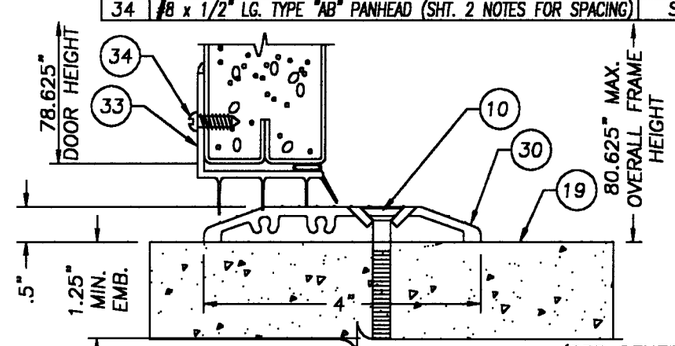

1/2 VERTICAL CROSS-SECTION (SEE GENERAL NOTES NO. 7 SHEET 1)
1-PIECE BARRIER FREE THRESHOLD W/ 1.125" UNDER CUT

NOTES:
1. SPACING FOR ITEM #34 IS AS FOLLOWS FROM LEFT TO RIGHT; 1.34375", 9.5", 7.0", 7.0" & 9.5"

APPROVED AS COMPLYING WITH THE SOUTH FLORIDA BUILDING CODE
DATE June 15, 2000
BY Manuel Sera
PRODUCT CONTROL DIVISION
BUILDING CODE COMPLIANCE OFFICE
ACCEPTANCE NO. 99-1220.03

GENERAL PRODUCTS CO. INC.
P.O. BOX 7387
FREDERICKSBURG, VA 22404
PH. (540) 898-5700

PRODUCT: LANDMARK STEEL EDGE INSULATED STEEL DOOR WITH WOOD FRAME

PART OR ASSEMBLY: VERTICAL CROSS SECTIONS & BILL OF MATERIALS

NO.	DATE	REVISIONS	BY
1	5/18/00	GENERAL REVISION	TJH

RW BUILDING CONSULTANTS, INC.
813.684.3831

DATE: 2/24/00
SCALE: 1/2"=1"
DWG. BY: TJH
CHK. BY: RW
DRAWING NO.: S-2002
SHEET 2 OF 6

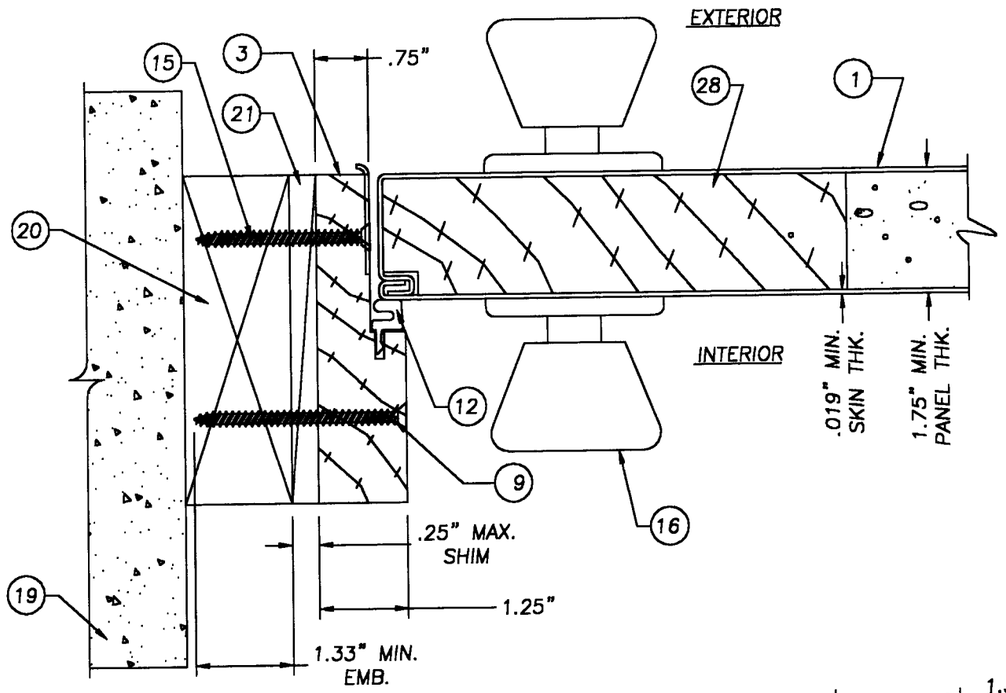

2/3 HORIZONTAL CROSS SECTION
LATCH JAMB TO BUCK, TYP.

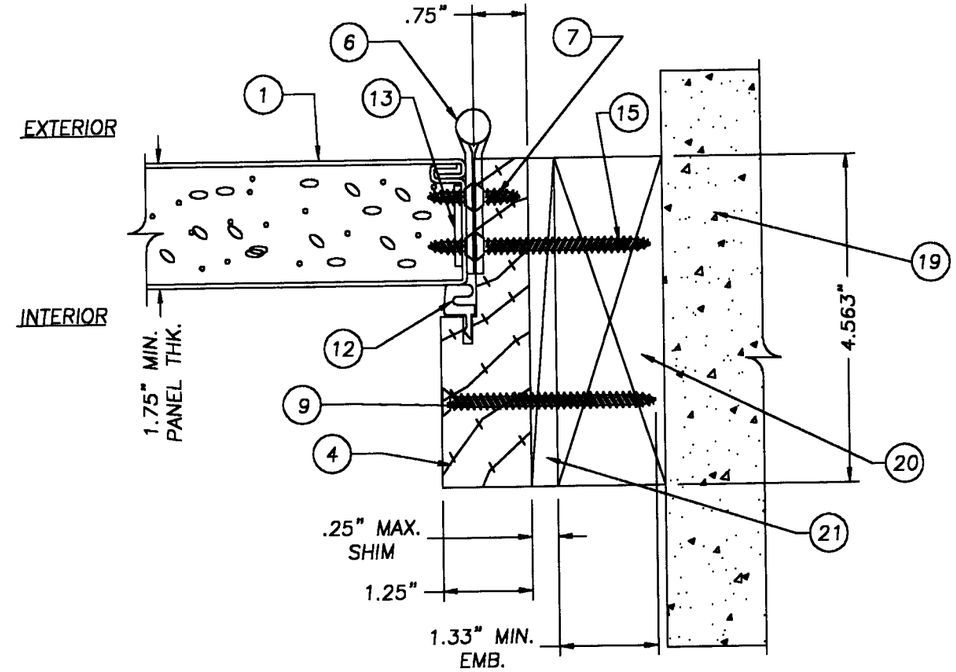

1/3 HORIZONTAL CROSS SECTION
HINGE JAMB TO BUCK, TYP.

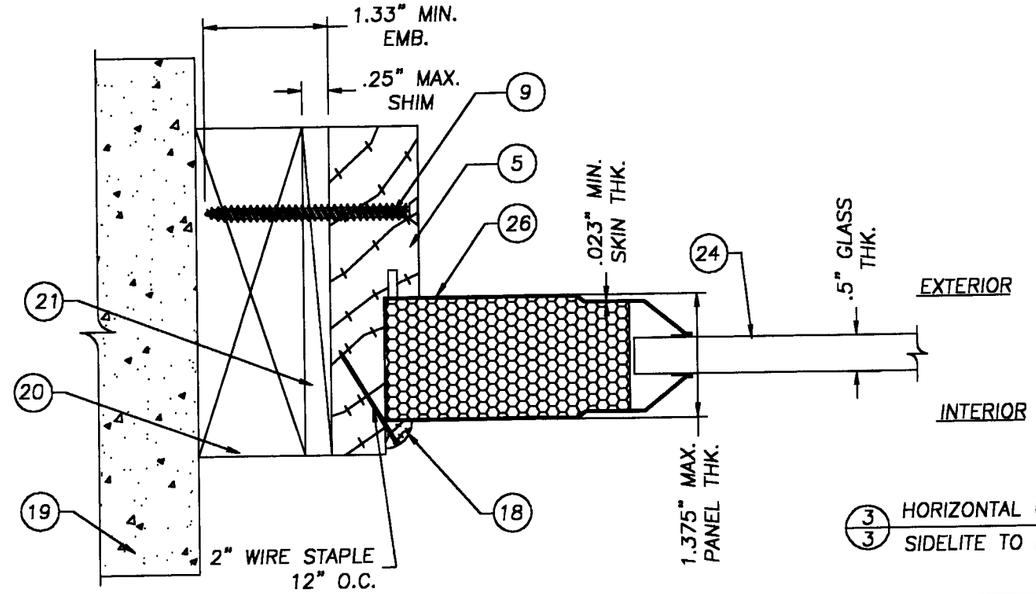

3/3 HORIZONTAL CROSS SECTION
SIDELITE TO BUCK, TYP.

GENERAL PRODUCTS CO. INC.
P.O. BOX 7387
FREDERICKSBURG, VA 22404
PH. (540) 898-5700

PRODUCT:
LANDMARK STEEL EDGE INSULATED STEEL DOOR WITH WOOD FRAME

PART OR ASSEMBLY:
HORIZONTAL CROSS SECTIONS (1/3, 2/3 & 3/3)

NO.	DATE	REVISIONS	BY
1	5/18/00	GENERAL REVISION	TJH

RW BUILDING CONSULTANTS, INCORPORATED 813.684.3831

APPROVED AS COMPLYING WITH THE SOUTH FLORIDA BUILDING CODE
DATE June 15, 2000
BY Manuel Perez
PRODUCT CONTROL DIVISION
BUILDING CODE COMPLIANCE OFFICE
ACCEPTANCE NO. 99-1220.03

DATE: 2/24/00
SCALE: 1/2"=1"
DWG. BY: TJH
CHK. BY: RW
DRAWING NO.: S-2002
SHEET 3 OF 6

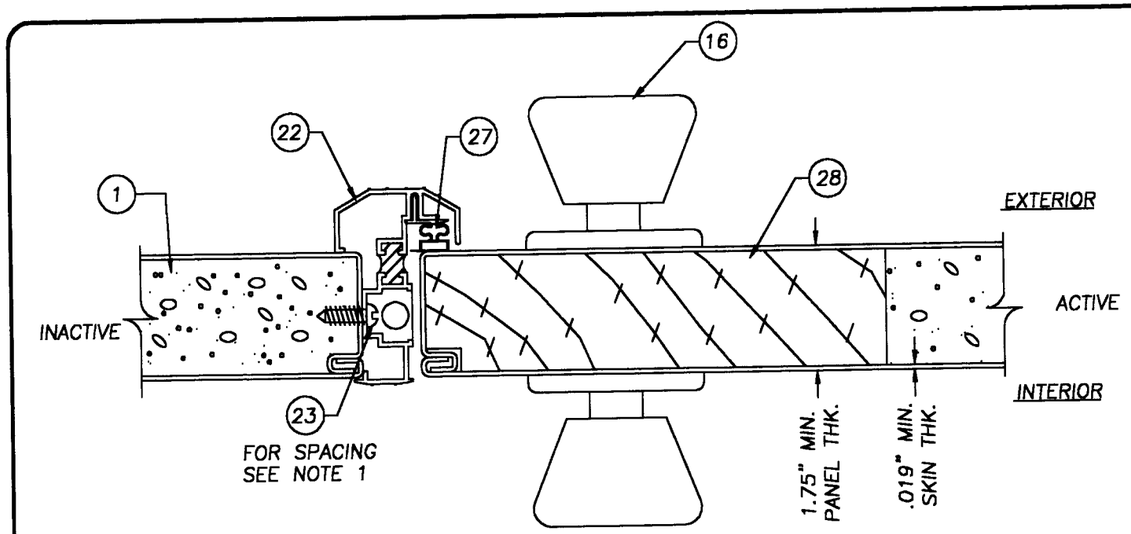

1/4 HORIZONTAL CROSS SECTION AT ASTRAGAL, TYP.

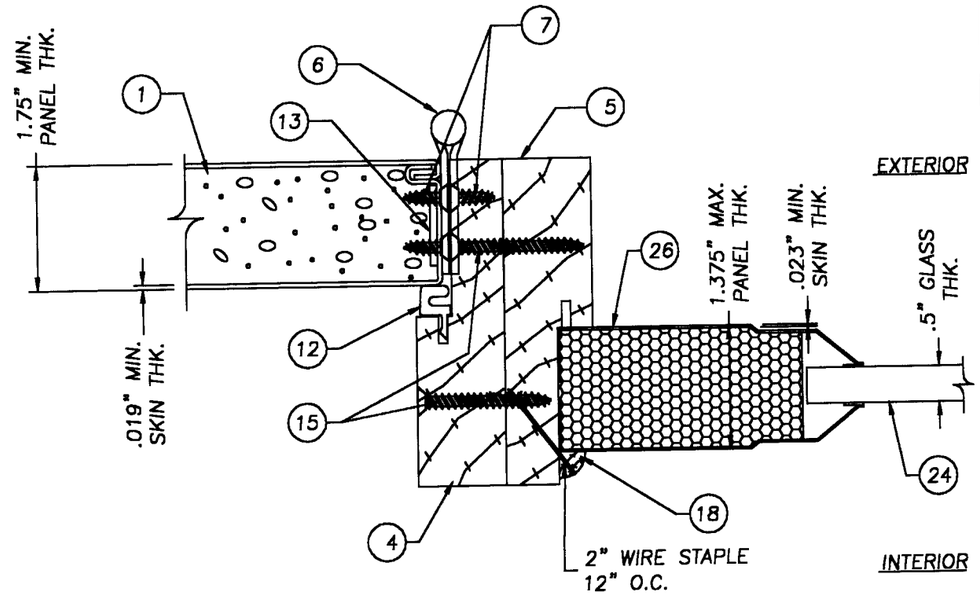

2/4 HORIZONTAL CROSS SECTION SIDELITE TO HINGE JAMB, TYP.

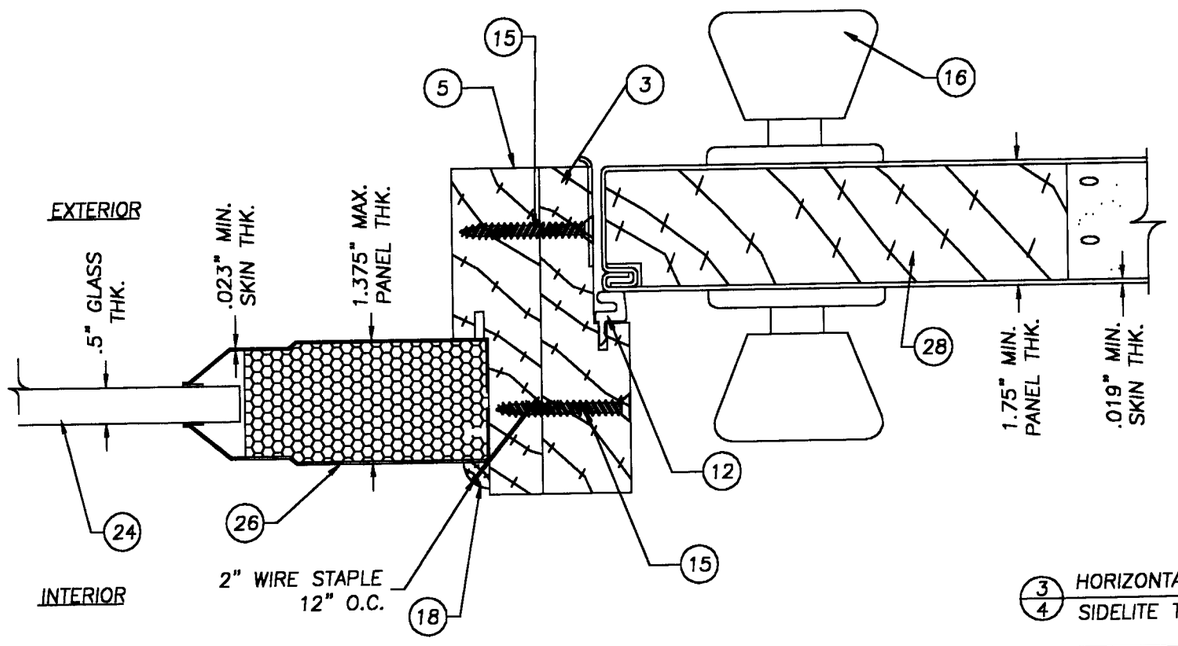

3/4 HORIZONTAL CROSS SECTION SIDELITE TO LATCH JAMB, TYP.

NOTES:
1. SPACING FOR ITEM #23; FROM TOP DOWN & BOTTOM UP; .75", 2", 3.25", 4.5" & 18.875"

GENERAL PRODUCTS CO. INC.
P.O. BOX 7387
FREDERICKSBURG, VA 22404
PH. (540) 898-5700

PRODUCT:
LANDMARK STEEL EDGE INSULATED STEEL DOOR WITH WOOD FRAME

PART OR ASSEMBLY:
HORIZONTAL CROSS SECTIONS (1/4, 2/4 & 3/4)

NO.	DATE	REVISIONS	BY
1	5/18/00	GENERAL REVISION	TJH

RW BUILDING CONSULTANTS, INCORPORATED 813.684.3831

APPROVED AS COMPLYING WITH THE SOUTH FLORIDA BUILDING CODE
DATE June 15, 2000
BY [signature]
PRODUCT CONTROL DIVISION
BUILDING CODE COMPLIANCE OFFICE
ACCEPTANCE NO. 99-1220.03

DATE: 2/24/00
SCALE: 1/2"=1"
DWG. BY: TJH
CHK. BY: RW
DRAWING NO.: S-2002
SHEET 4 OF 6

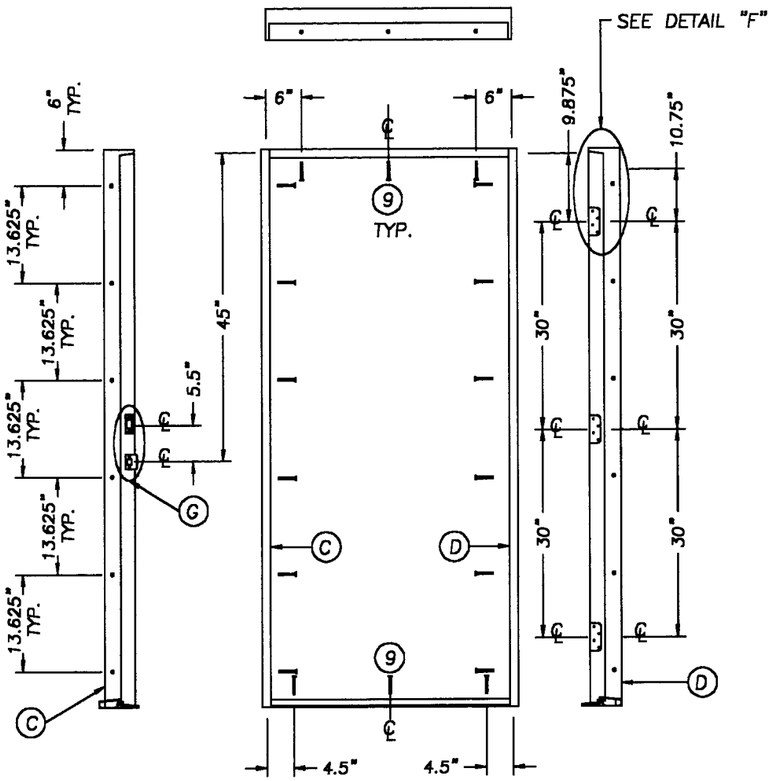

SINGLE DOOR ANCHORING LAYOUT

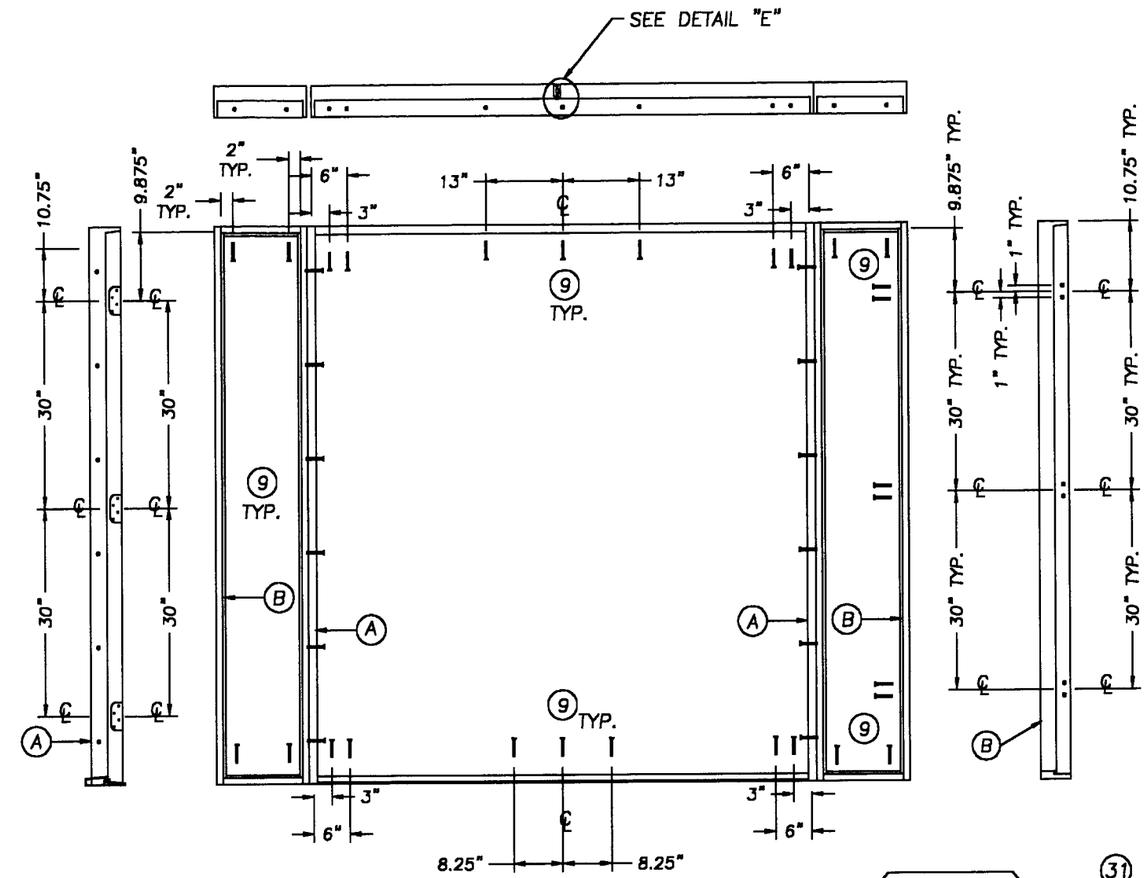

DOUBLE DOOR W/SIDELITES ANCHORING LAYOUT

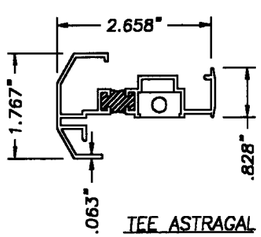

TEE ASTRAGAL

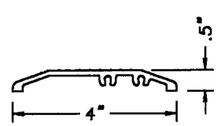

BARRIER FREE THRESHOLD

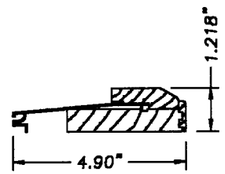

OUTSWING BUMP FACE
WOOD & ALUMINUM THRESHOLD

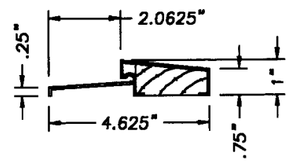

OUTSWING BUMP FACE
ALUMINUM THRESHOLD

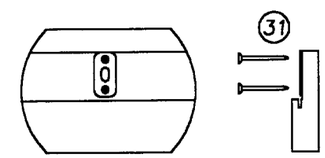

DETAIL "E"
ATTACH ASTRAGAL THROW BOLT STRIKE PLATE TO FRAME AS SHOWN.

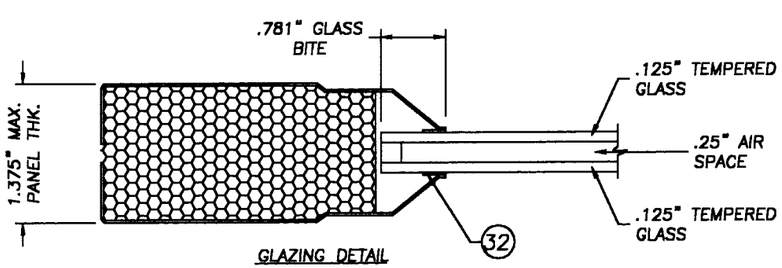

GLAZING DETAIL

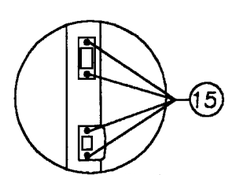

DETAIL "G"
STRIKE & DEADBOLT PLATE DETAILS

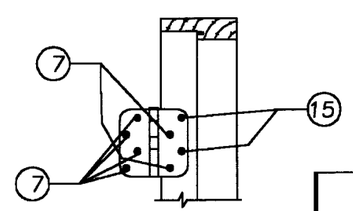

DETAIL "F"
HINGE DETAIL

NOTES:
1. SCREWS LABELED ITEM #9 AT THE THRESHOLD WILL BE REPLACED WITH ITEM #10 (TAPCON ANCHOR) WHEN ANCHORING IN A MASONRY OPENING WITH 1.25" MIN. EMBEDMENT INTO MASONRY.

APPROVED AS COMPLYING WITH THE SOUTH FLORIDA BUILDING CODE
DATE June 15, 2000
BY [signature]
PRODUCT CONTROL DIVISION
BUILDING CODE COMPLIANCE OFFICE
ACCEPTANCE NO. 99-1220.03

GENERAL PRODUCTS CO. INC.
P.O. BOX 7387
FREDERICKSBURG, VA 22404
PH. (540) 898-5700

PRODUCT: LANDMARK STEEL EDGE INSULATED STEEL DOOR WITH WOOD FRAME

PART OR ASSEMBLY: ANCHORING LAYOUTS & GLAZING DETAIL

NO.	DATE	REVISIONS	BY
1	5/18/00	GENERAL REVISION	TJH

RW BUILDING CONSULTANTS, INC.
813.684.3831

DATE:	2/24/00
SCALE:	N.T.S.
DWG. BY:	TJH
CHK. BY:	RW
DRAWING NO.:	S-2002
SHEET	5 OF 6

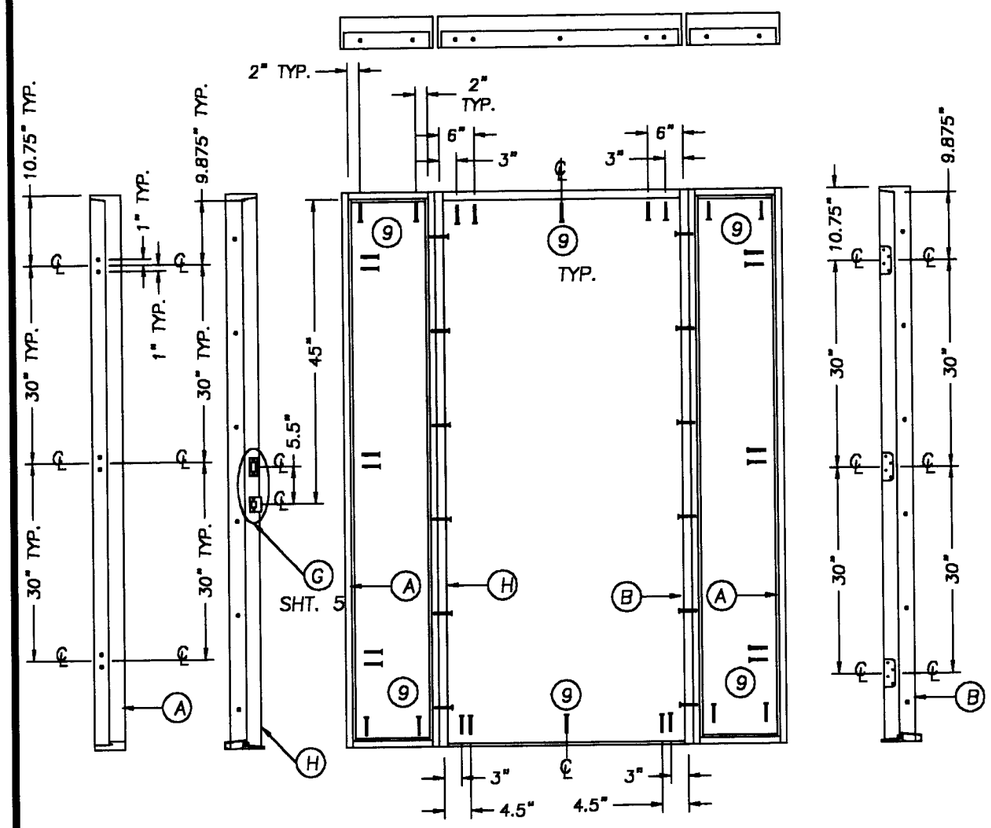

SINGLE DOOR W/SIDELITES ANCHORING LAYOUT

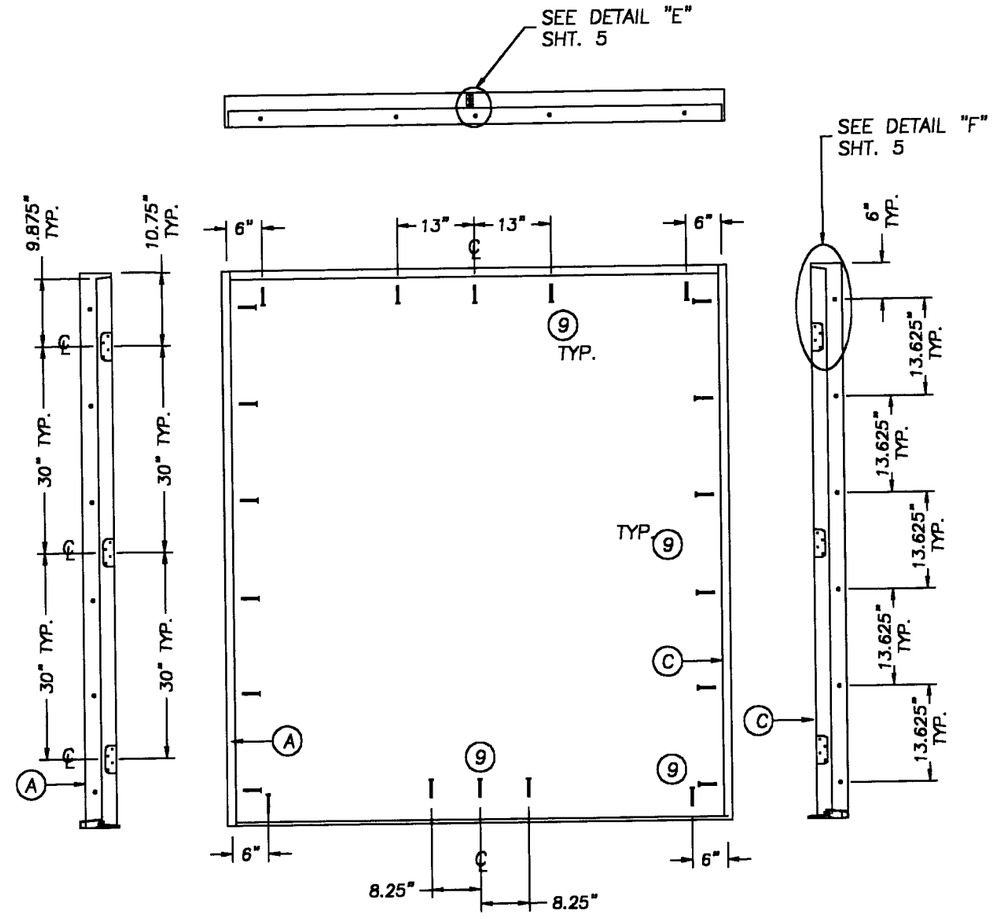

DOUBLE DOOR ANCHORING LAYOUT

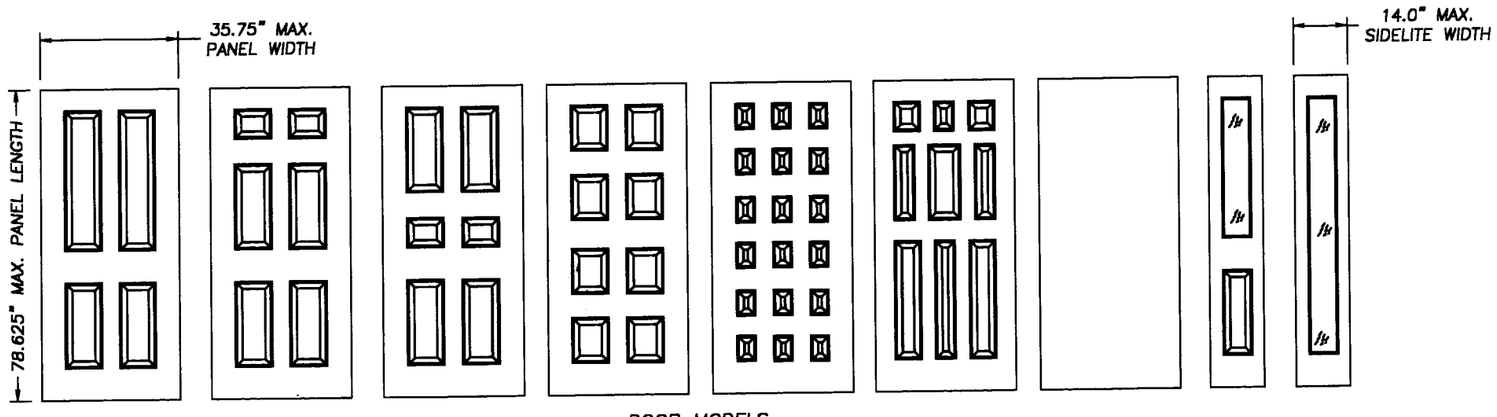

DOOR MODELS

NOTES:
1. SCREWS LABELED ITEM #9 AT THE THRESHOLD WILL BE REPLACED WITH ITEM #10 (TAPCON ANCHOR) WHEN ANCHORING IN A MASONRY OPENING WITH 1.25" MIN. EMBEDMENT INTO MASONRY.

APPROVED AS COMPLYING WITH THE SOUTH FLORIDA BUILDING CODE
DATE June 15, 2000
BY Manuel Diaz
PRODUCT CONTROL DIVISION
BUILDING CODE COMPLIANCE OFFICE
ACCEPTANCE NO. 99-1220.03

GENERAL PRODUCTS CO. INC.
P.O. BOX 7387
FREDERICKSBURG, VA 22404
PH. (540) 898-5700

PRODUCT: LANDMARK STEEL EDGE INSULATED STEEL DOOR WITH WOOD FRAME

PART OR ASSEMBLY: ANCHORING LAYOUTS & DOOR MODELS

REVISIONS

NO.	DATE		BY
1	5/18/00	GENERAL REVISION	TJH

RW BUILDING CONSULTANTS, INC.
813.684.3831

DATE: 2/24/00
SCALE: N.T.S.
DWG. BY: TJH
CHK. BY: RW
DRAWING NO.: S-2002
SHEET 6 OF 6