MIAMI-DADE COUNTY, FLORIDA
METRO-DADE FLAGLER BUILDING

BUILDING CODE COMPLIANCE OFFICE
METRO-DADE FLAGLER BUILDING
140 WEST FLAGLER STREET, SUITE 1603
MIAMI, FLORIDA 33130-1563
(305) 375-2901 FAX (305) 375-2908

CONTRACTOR LICENSING SECTION
(305) 375-2527 FAX (305) 375-2558

CONTRACTOR ENFORCEMENT SECTION
(305) 375-2966 FAX (305) 375-2908

PRODUCT CONTROL DIVISION
(305) 375-2902 FAX (305) 372-6339

PRODUCT CONTROL NOTICE OF ACCEPTANCE

Coastal Shutters, Inc.
3789 N.W. 46th Street
Miami FL 33142

Your application for Product Approval of:
6.8" Accordion Shutter.
under Chapter 8 of the Code of Miami-Dade County governing the use of Alternate Materials and Types of Construction, and completely described herein, has been recommended for acceptance by the Miami-Dade County Building Code Compliance Office (BCCO) under the conditions specified herein.

This approval shall not be valid after the expiration date stated below. BCCO reserves the right to secure this product or material at anytime from a jobsite or manufacturer's plant for quality control testing.
If this product or material fails to perform in the approved manner, BCCO may revoke, modify, or suspend the use of such product or material immediately. BCCO reserves the right to revoke this approval, if it is determined BCCO that this product or material fails to meet the requirements of the South Florida Building Code.

The expense of such testing will be incurred by the manufacturer.

Acceptance No.: 99-1220.09

Expires: 02/04/2003

Raul Rodriguez
Chief Product Control Division

THIS IS THE COVERSHEET, SEE ADDITIONAL PAGES FOR SPECIFIC AND GENERAL CONDITIONS

BUILDING CODE & PRODUCT REVIEW COMMITTEE

This application for Product Approval has been reviewed by the BCCO and approved by the Building Code and Product Review Committee to be used in Dade County, Florida under the conditions set forth above.

Francisco J. Quintana, R.A.
Director
Miami-Dade County
Building Code Compliance Office

Approved: 02/04/2000

Internet mail address: postmaster@buildingcodeonline.com **Homepage: http://www.buildingcodeonline.com**

Coastal Shutters, Inc.

ACCEPTANCE No. : 99-1220.09

APPROVED : FEB 0 4 2000

EXPIRES : FEB 0 4 2003

NOTICE OF ACCEPTANCE: STANDARD CONDITIONS

1. SCOPE

This approves an Aluminum 6.8" Accordion Shutter, as described in Section 2 of this Notice of Acceptance, designed to comply with the South Florida Building Code, 1994 Edition for Miami-Dade County, for the locations where the pressure requirements, as determined by SFBC Chapter 23, do not exceed the Design Pressure Rating values indicated in the approved drawings.

2. PRODUCT DESCRIPTION

This Aluminum 6.8" Accordion Shutter and its components shall be constructed in strict compliance with the following documents: Drawing No. 99-909, titled " Coastal 6.8" Residential Accordion", prepared by Knezevich & Associates, Inc., dated December 8, 1998, last revision #1 dated March 19, 1999, sheets 1 through 6 of 6, bearing the Miami-Dade County Product Control Approval stamp with the Notice of Acceptance number and approval date by the Miami-Dade County Product Control Division. These documents shall hereinafter be referred to as the approved drawings.

3. LIMITATIONS

All permanent set components, included but not limited to embedded anchor bolts, threaded cones, metal shields, headers and sills, must be protected against corrosion, contamination and damage at all times.

4. INSTALLATION

This Aluminum 6.8" Accordion Shutter and its components shall be installed in strict compliance with the approved drawings.

5. LABELING

Each unit shall bear a permanent label with the manufacturer's name or logo, city, state and the following statement: "Miami-Dade County Product Control Approved".

6. BUILDING PERMIT REQUIREMENTS

6.1 Application for building permit shall be accompanied by copies of the following:

- **6.1.1** This Notice of Acceptance.
- **6.1.2** Duplicate copies of the approved drawings, as identified in Section 2 of this Notice of Acceptance, clearly marked to show the components selected for the proposed installation.
- **6.1.3** Any other documents required by the Building Official or the South Florida Building Code (SFBC) in order to properly evaluate the installation of this system.

Helmy A. Makar

Helmy A. Makar, P.E.- Product Control Examiner
Product Control Division

Coastal Shutters, Inc.

ACCEPTANCE No. : 99-1220.09

APPROVED : FEB 0 4 2000

EXPIRES : FEB 0 4 2003

NOTICE OF ACCEPTANCE: STANDARD CONDITIONS

1 Renewal of this Acceptance (approval) shall be considered after a renewal application has been filed and the original submitted documents, including test-supporting data, engineering documents, are no older than eight (8) years.

2. Any and all approved products shall be permanently labeled with the manufacturer's name, city, state, and the following statement: "Miami-Dade County Product Control Approved", or as specifically stated in the specific conditions of this Acceptance.

3. Renewals of Acceptance will not be considered if:
   a. There has been a change in the South Florida Building Code affecting the evaluation of this product and the product is not in compliance with the code changes.
   b. The product is no longer the same product (identical) as the one originally approved.
   c. If the Acceptance holder has not complied with all the requirements of this acceptance, including the correct installation of the product.
   d. The engineer, who originally prepared, signed and sealed the required documentation initially submitted, is no longer practicing the engineering profession.

4. Any revision or change in the materials, use, and/or manufacture of the product or process shall automatically be cause for termination of this Acceptance, unless prior written approval has been requested (through the filing of a revision application with appropriate fee) and granted by this office.

5. Any of the following shall also be grounds for removal of this Acceptance:
   a. Unsatisfactory performance of this product or process.
   b. Misuse of this Acceptance as an endorsement of any product, for sales, advertising or any other purposes.

6. The Notice of Acceptance number preceded by the words Miami-Dade County, Florida, and followed by the expiration date may be displayed in advertising literature. If any portion of the Notice of Acceptance is displayed, then it shall be done in its entirety.

7. A copy of this Acceptance as well as approved drawings and other documents, where it applies, shall be provided to the user by the manufacturer or its distributors and shall be available for inspection at the job site at all time. The engineer needs not reseal the copies.

8. Failure to comply with any section of this Acceptance shall be cause for termination and removal of Acceptance.

9. This Notice of Acceptance consists of pages 1, 2 and this last page 3.

END OF THIS ACCEPTANCE

Helmy A. Makar, P.E.- Product Control Examiner
Product Control Division

NOTES:

1. THIS ACCORDION SHUTTER SYSTEM IS DESIGNED IN ACCORDANCE WITH THE SOUTH FLORIDA BUILDING CODE, MIAMI-DADE COUNTY 1994 EDITION.
2. POSITIVE AND NEGATIVE DESIGN PRESSURE CALCULATIONS SHALL BE PERFORMED FOR SPECIFIC JOBS IN ACCORDANCE WITH ASCE 7-88 "MINIMUM DESIGN LOADS FOR BUILDINGS AND OTHER STRUCTURES". TABLES MUST BE REFERENCED AT APPROPRIATE DESIGN LOADS.
3. ALL EXTRUSIONS SHOWN SHALL BE 6063-T6 ALUMINUM ALLOY, U.O.N.
4. EACH SHUTTER ASSEMBLY SHALL BE PERMANENTLY LABELED AT THE BOTTOM END OF THE LOCKING SLAT AS FOLLOWS:

   Coastal Shutters, Inc.
   MIAMI, FLORIDA
   MIAMI-DADE COUNTY PRODUCT CONTROL APPROVED

5. ALL BOLTS AND WASHERS SHALL BE STAINLESS STEEL WITH A MINIMUM TENSILE STRENGTH OF 60 KSI, U.O.N. POP RIVETS SHALL BE 3/16"Ø 5052 ALUMINUM ALLOY.
6. THE DETAILS AND SPECIFICATIONS SHOWN HEREIN REPRESENT THE PRODUCTS TESTED FOR IMPACT, CYCLIC AND UNIFORM STATIC AIR PRESSURE IN CONFORMANCE WITH DADE COUNTY PROTOCOLS PA 201, 202, AND 203.
7. DESIGN IS BASED ON CONSTRUCTION TESTING CORPORATION (CTC) TEST REPORT No. 98-050.
8. FLOORS TRACKS MAY BE REMOVABLE AT NON-STACKING LOCATIONS. USE CALK-IN REMOVABLE ANCHORS.
9. ALL SHUTTERS SHALL HAVE A LOCKING MECHANISM CONSISTING OF THUMBSCREW OR PUSH LOCK AT CENTER OR SIDE CLOSURE.
10. TOP AND BOTTOM DETAILS MAY BE INTERCHANGED AS FIELD CONDITIONS REQUIRE.

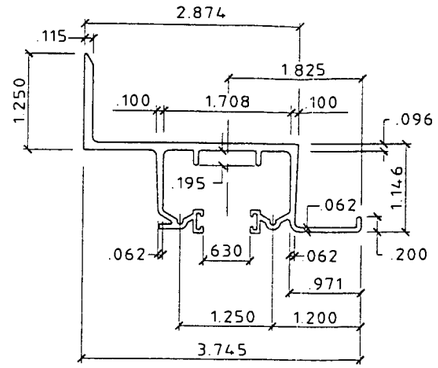

1 WALL HEADER
SCALE: HALF SIZE

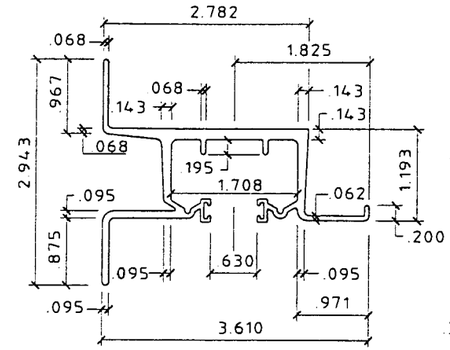

2 WALL HEADER
SCALE: HALF SIZE

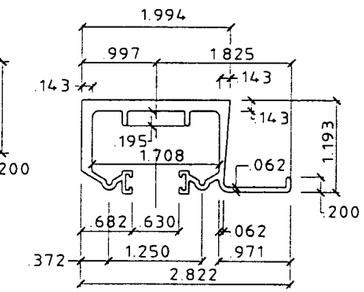

3 HEADER
SCALE: HALF SIZE

4 NOT USED
SCALE: HALF SIZE

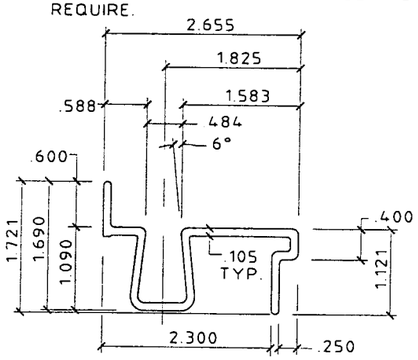

5 BASE SILL
SCALE: HALF SIZE

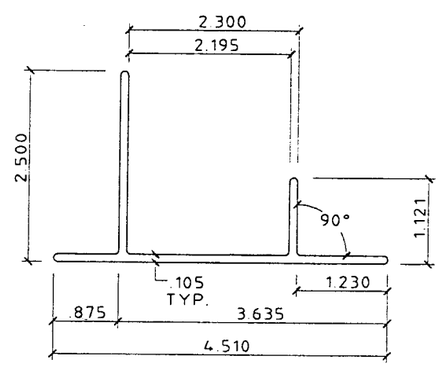

6 BASE TRACK
SCALE: HALF SIZE

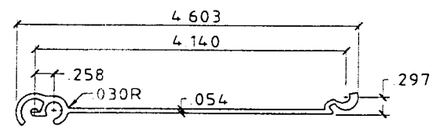

7 TYP. SLAT
SCALE: HALF SIZE

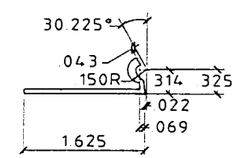

8 STARTER
SCALE: HALF SIZE

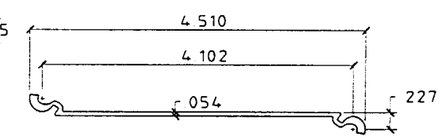

9 ALT. SLAT
SCALE: HALF SIZE

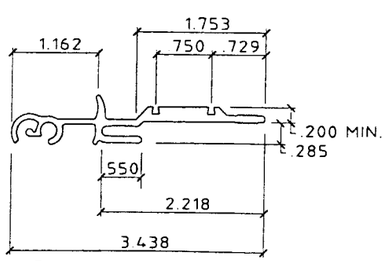

10 MALE/FEMALE LOCK
SCALE: HALF SIZE

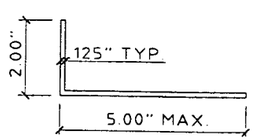

11 ANGLE
SCALE: 3" = 1' - 0"

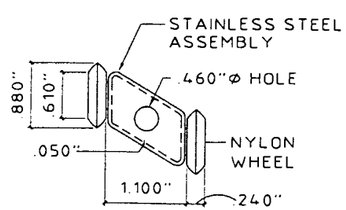

TYP. AT EVERY OTHER
INSIDE JOINT AT TOP.

12 ROLLER ASSEMBLY
SCALE: HALF SIZE

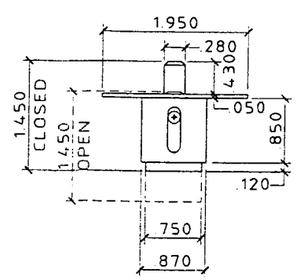

13 BRASS PUSH LOCK
SCALE: HALF SIZE

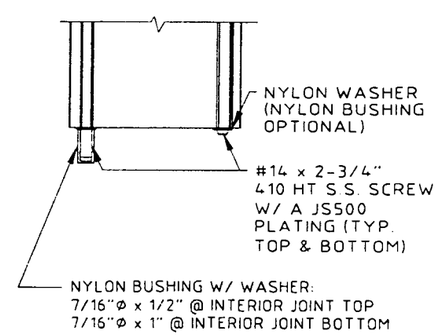

BUSHING ASSEMBLY DETAIL
SCALE: HALF SIZE

APPROVED AS COMPLYING WITH THE
SOUTH FLORIDA BUILDING CODE
DATE February 04, 2000
BY [signature]
PRODUCT CONTROL DIVISION
BUILDING CODE COMPLIANCE OFFICE
ACCEPTANCE NO. 99-1220.09

99-1220.09

KNEZEVICH & ASSOCIATES, INC.
CONSULTING ENGINEERS • PRODUCT TESTING
1260 N. UNIVERSITY DRIVE, SUITE 180 • FORT LAUDERDALE, FL 33322
TEL: (954) 382-2800 • FAX: (954) 382-2989
WEBSITE: WWW.KNEZEVICH.COM • E-MAIL: KA@KNEZEVICH.COM

COPYRIGHT © 1999 KNEZEVICH & ASSOCIATES, INC.

6 8 SYSTEM LICENSED BY SOUTHERN SHUTTER ASSOCIATION

COASTAL 6.8"
RESIDENTIAL ACCORDION

Coastal Shutters, Inc.
3789 N.W. 46th STREET
Miami, Florida 33142
ph(305) 634-5600

revisions

no	date	by	description
1	03/19/99	VJK	COUNTY COMMENTS

SSA I.D. # 1216999825 4D

V.J. KNEZEVICH
PROFESSIONAL ENGINEER
FL License No.
PE 0010993

DEC 21 1999

date 12/08/98	
scale AS NOTED	drawn by MC
design by VJK	checked by VJK

drawing no.
99-909

sheet 1 of 6

12/21/99 14:34

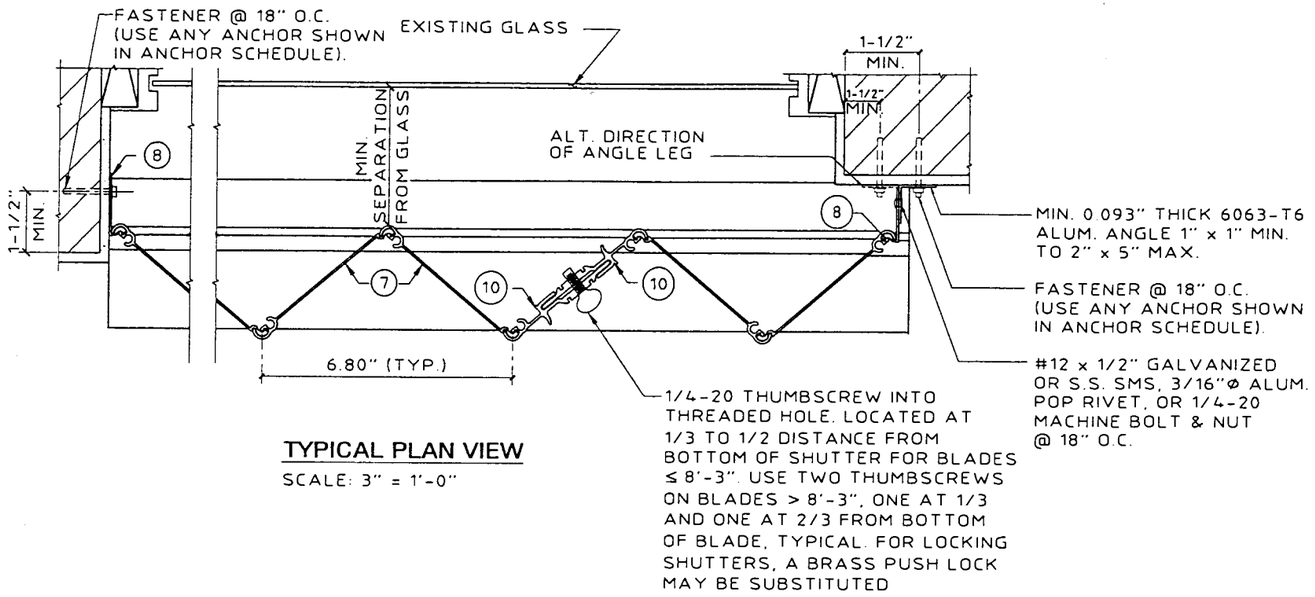

TYPICAL PLAN VIEW

SCALE: 3" = 1'-0"

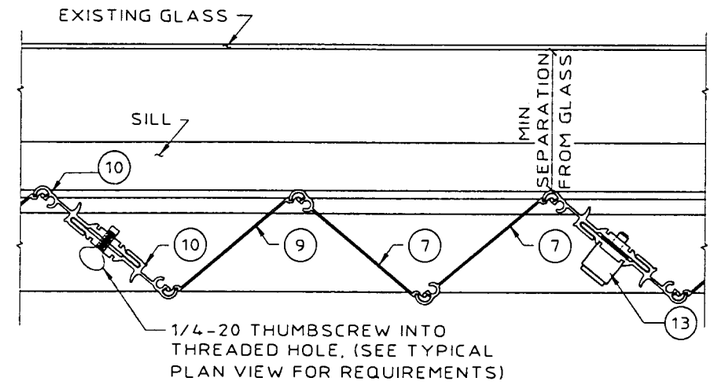

MULTIPLE SHUTTER ASSEMBLY

SCALE: 3" = 1'-0"

NOTE:
STARTERS (8) MUST BE LOCATED TO INSURE FULL DEPLOYMENT OF SHUTTER AND COMPLETE INTERLOCKING OF ADJACENT BLADES.

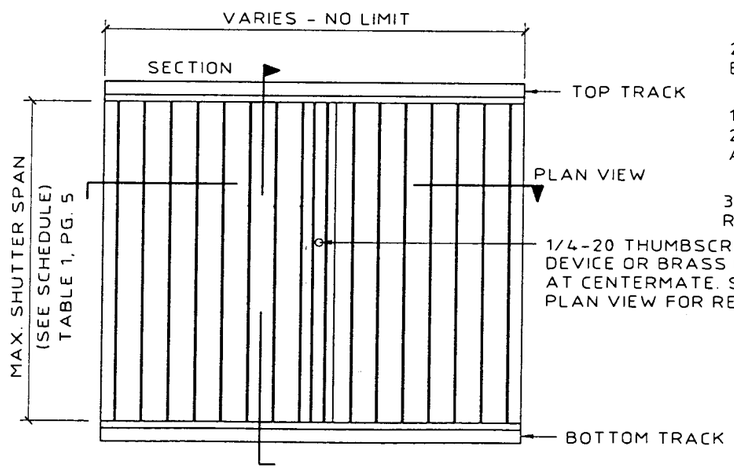

TYPICAL ELEVATION

N.T.S.

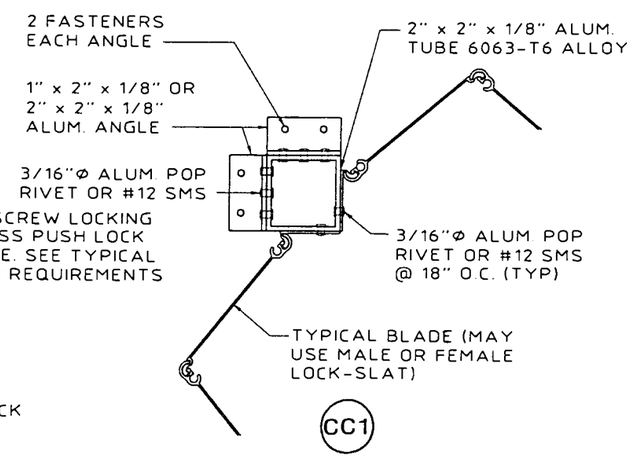

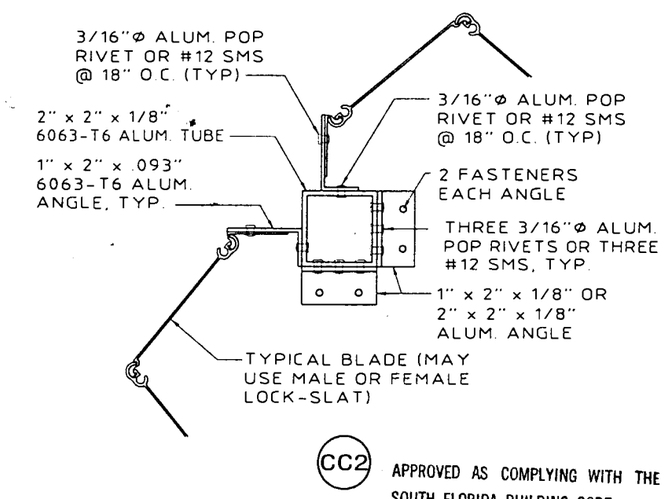

TYPICAL CORNER CLOSURE DETAILS

SCALE: 3" = 1'-0"

APPROVED AS COMPLYING WITH THE
SOUTH FLORIDA BUILDING CODE
DATE February 04 2000
BY Henry A. Mahon
PRODUCT CONTROL DIVISION
BUILDING CODE COMPLIANCE OFFICE
ACCEPTANCE NO. 99-1220.09

KNEZEVICH & ASSOCIATES, INC.
CONSULTING ENGINEERS • PRODUCT TESTING
1260 N. UNIVERSITY DRIVE, SUITE 180 • FORT LAUDERDALE, FL 33322
TEL (954) 382-2600 • FAX: (954) 382-2989
WEBSITE: WWW.KNEZEVICH.COM • E-MAIL: KA@KNEZEVICH.COM
COPYRIGHT © 1999 KNEZEVICH & ASSOCIATES, INC.
6 8 SYSTEM LICENSED BY SOUTHERN SHUTTER ASSOCIATION

COASTAL 6.8"
RESIDENTIAL ACCORDION

Coastal Shutters, Inc.
3789 N.W. 46th STREET
Miami, Florida 33142
ph(305) 634-5600

revisions			
no	date	by	description
1	03/09/99	VJK	COUNTY COMMENTS

SSA I.D.# 12169998254D

V.J. KNEZEVICH
PROFESSIONAL ENGINEER
FL License No:
PE 0010983

DEC 21 1999

date 12/08/98	
scale AS NOTED	drawn by MC
design by VJK	checked by VJK

drawing no.
99-909

sheet 2 of 6

12/21/99 14:34

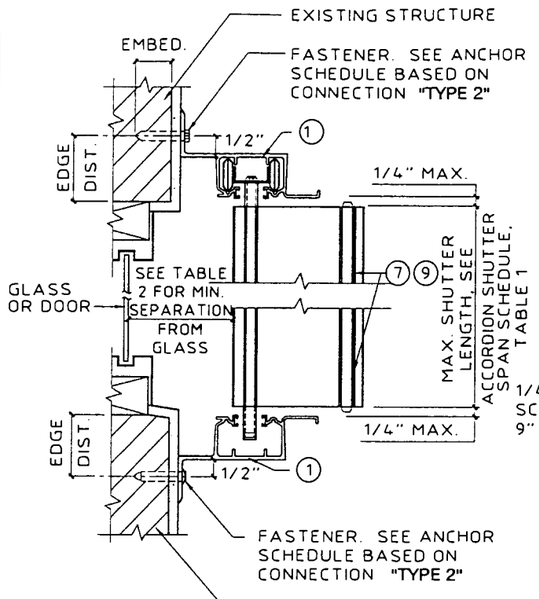

(A) **WALL MOUNT SECTION**
SCALE : 3"= 1'- 0"

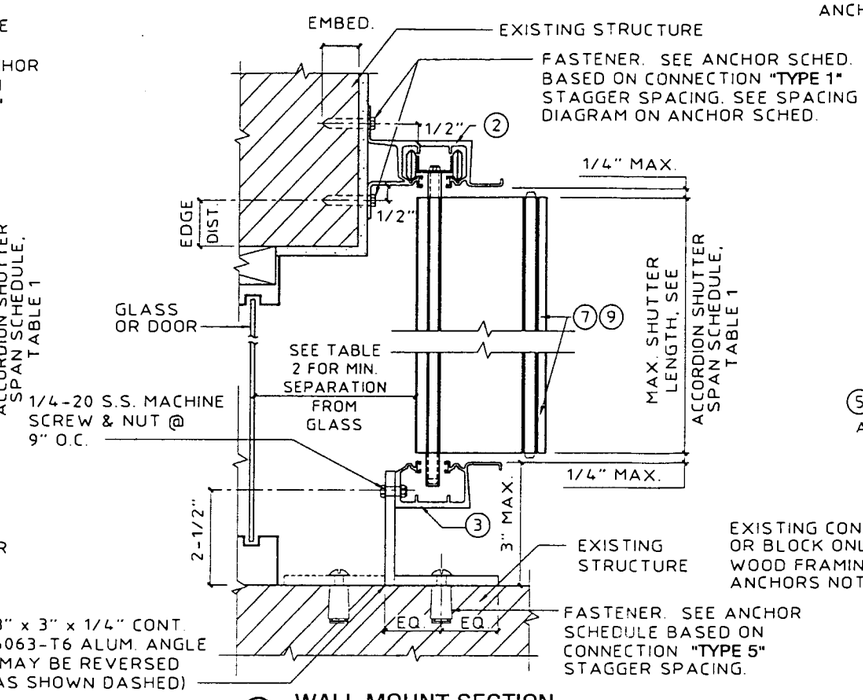

(B) **WALL MOUNT SECTION**
SCALE : 3"= 1'- 0"

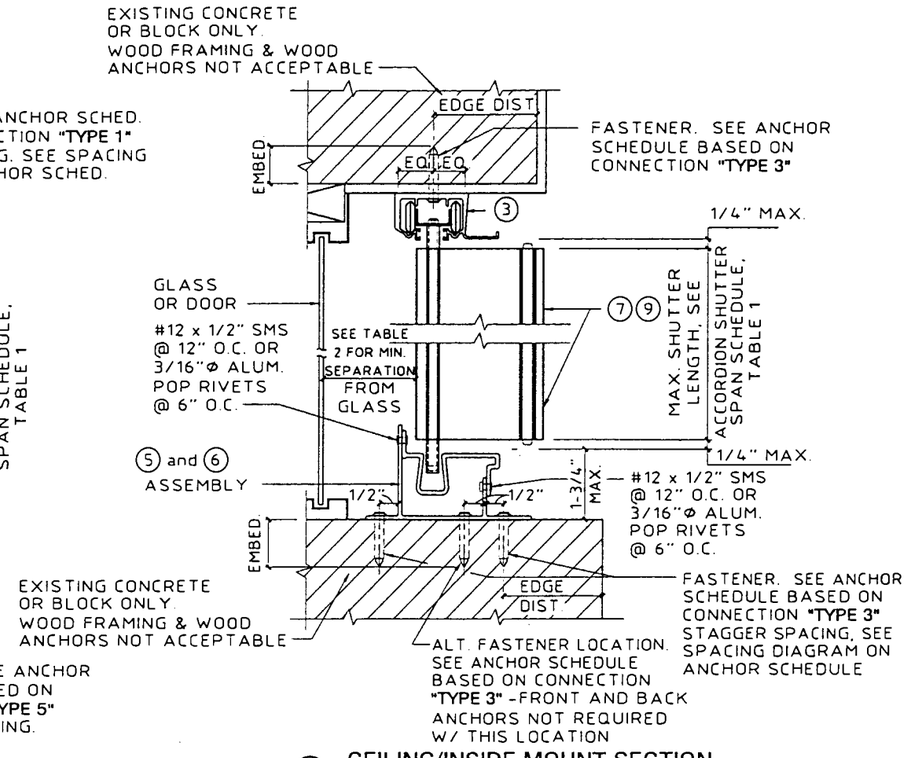

(C) **CEILING/INSIDE MOUNT SECTION**
SCALE : 3"= 1'- 0"

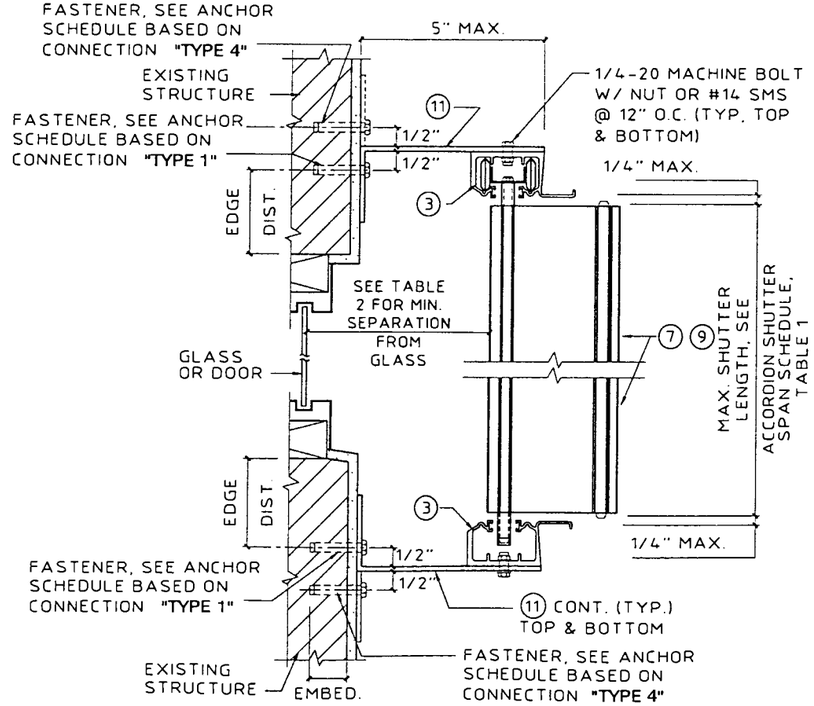

(D) **BUILD OUT MOUNT SECTION**
SCALE : 3"= 1'- 0"

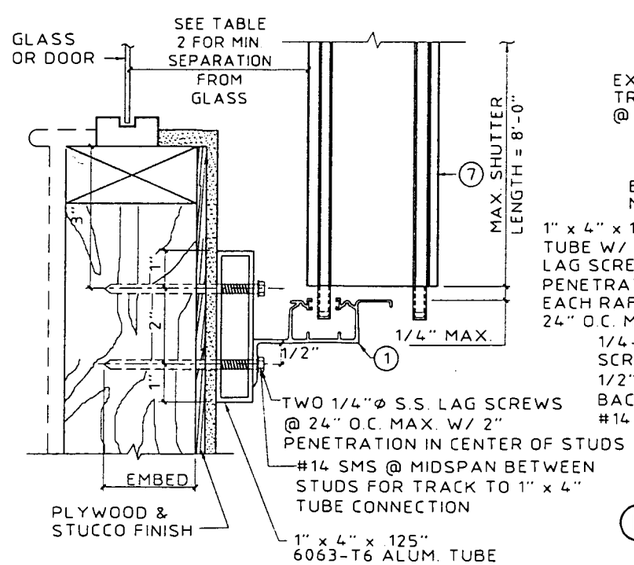

NOTE: THIS DETAIL MAY BE USED AT TOP

MAX. DESIGN LOAD = 72 PSF

(E) **WALL MOUNT SECTION**
SCALE : 3"= 1'- 0"

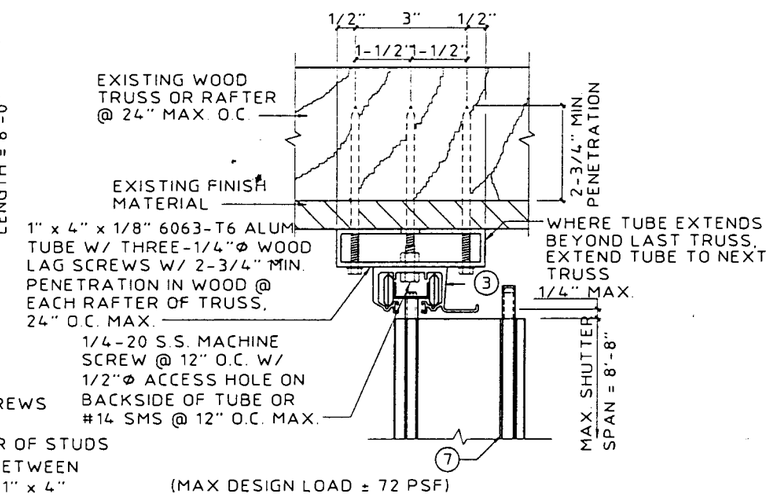

(MAX DESIGN LOAD ± 72 PSF)

(F) **TRUSS MOUNT SECTION**
SCALE : 3"= 1'- 0"

APPROVED AS COMPLYING WITH THE SOUTH FLORIDA BUILDING CODE
DATE February 04, 2000
BY Henry A. Hale
PRODUCT CONTROL DIVISION
BUILDING CODE COMPLIANCE OFFICE
ACCEPTANCE NO. 99-1220.09

KNEZEVICH & ASSOCIATES, INC.
CONSULTING ENGINEERS • PRODUCT TESTING
1260 N. UNIVERSITY DRIVE, SUITE 180 • FORT LAUDERDALE, FL 33322
TEL: (954) 382-2800 • FAX: (954) 382-2989
WEBSITE: WWW.KNEZEVICH.COM • E-MAIL: KA@KNEZEVICH.COM
COPYRIGHT © 1999 KNEZEVICH & ASSOCIATES, INC.
6.8 SYSTEM LICENSED BY SOUTHERN SHUTTER ASSOCIATION

COASTAL 6.8" RESIDENTIAL ACCORDION

Coastal Shutters, Inc.
3789 N.W. 46th STREET
Miami, Florida 33142
ph(305) 634-5600

revisions			
no	date	by	description
1	03/19/99	VJK	COUNTY COMMENTS

SSA I.D. # 12169998254D

V.J. KNEZEVICH
PROFESSIONAL ENGINEER
FL License No. PE 0010983

DEC 21 1999

date 12/08/98	
scale AS NOTED	drawn by MC
design by VJK	checked by VJK
drawing no. 99-909	
sheet 3 of 6	

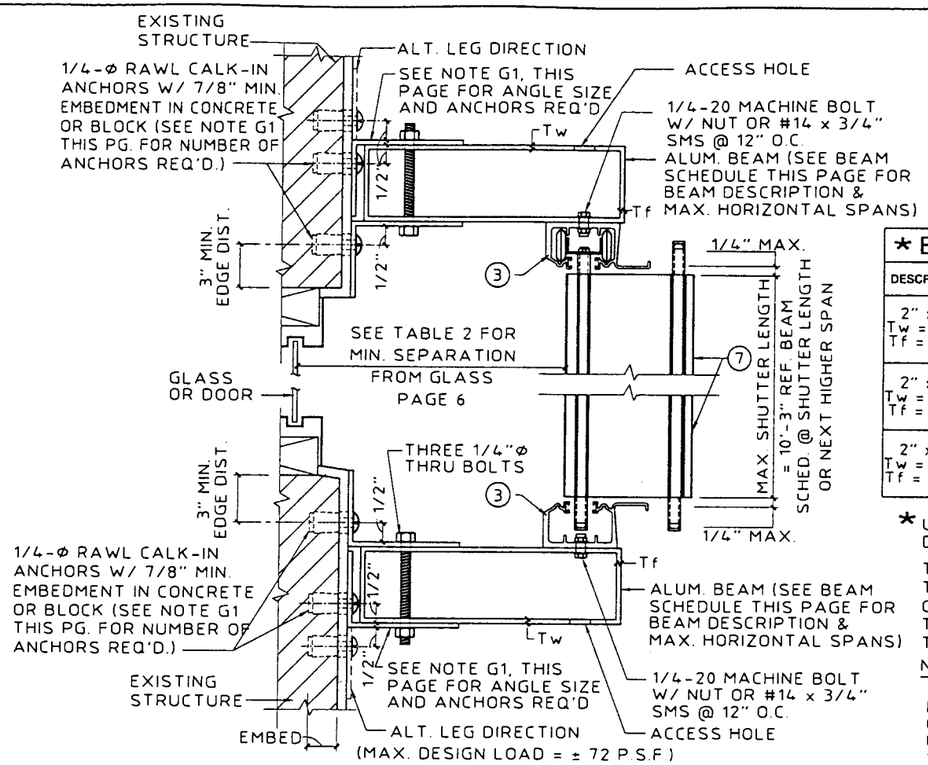

(MAX. DESIGN LOAD = ± 72 P.S.F.)

G BUILD-OUT MOUNT SECTION

SCALE : 3"= 1'- 0"

* BEAM SCHEDULE

DESCRIPTION	SHUTTER SPAN	BOTTOM BEAM	TOP BEAM
2" x 5" Tw = .125" Tf = .125"	5'-0"	9'-5"	9'-0"
	8'-0"	8'-1"	8'-0"
	10'-3"	7'-4"	7'-4"
2" x 7" Tw = .072" Tf = .130"	5'-0"	11'-4"	8'-5"
	8'-0"	9'-8"	7'-6"
	10'-3"	8'-9"	7'-0"
2" x 9" Tw = .072" Tf = .224"	5'-0"	15'-5"	9'-4"
	8'-0"	13'-2"	8'-4"
	10'-3"	11'-11"	7'-9"

* USE BEAM SCHEDULE FOR DETAIL (G).

TOP & BOTTOM BEAMS MAY BE USED TOGETHER OR IN COMBINATION W/ OTHER CONNECTION DETAILS. WHERE USED TOGETHER, BEAM MUST BE LIMITED TO TOP BEAM SPANS.

NOTE G1:

2" x 3" x 1/4" 6063-T6 ALUM. ANGLE TOP & BOTTOM. FOR 2" x 5" & 2" x 7" BEAM, USE THREE 1/4"Φ RAWL CALK-IN ANCHORS @ 3" O.C. IN EACH ANGLE AND USE 8" LONG ANGLES FOR 2" x 9" BEAM, USE FOUR 1/4"Φ CALK-IN ANCHORS @ 3" O.C. IN EACH ANGLE AND USE 11" LONG ANGLES

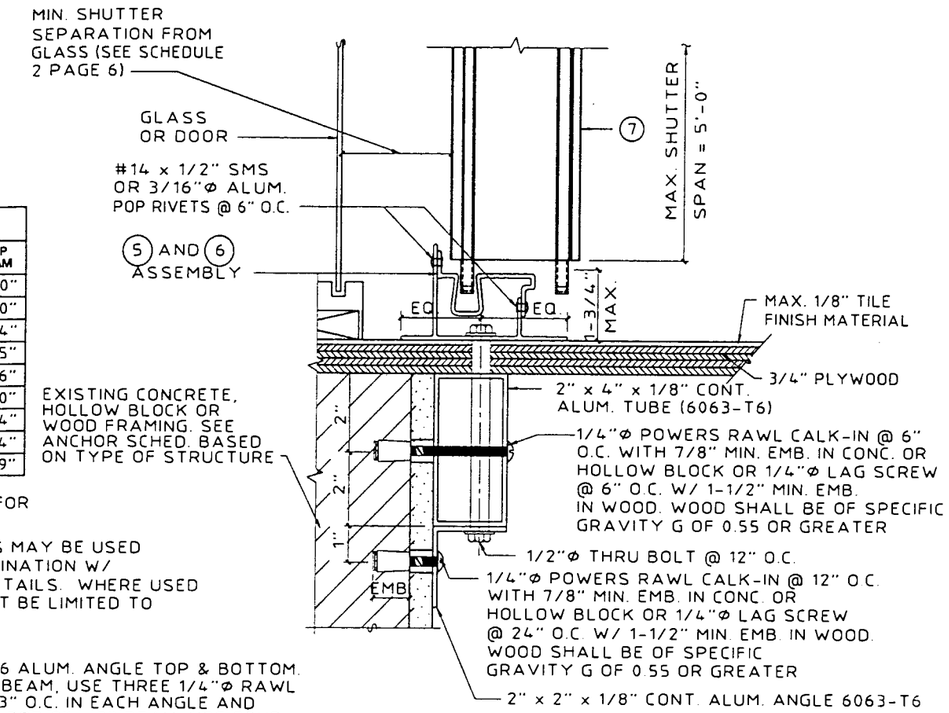

(MAX DESIGN LOAD ± 72 PSF)

I PASS THRU DETAIL

SCALE : 3"= 1'- 0"

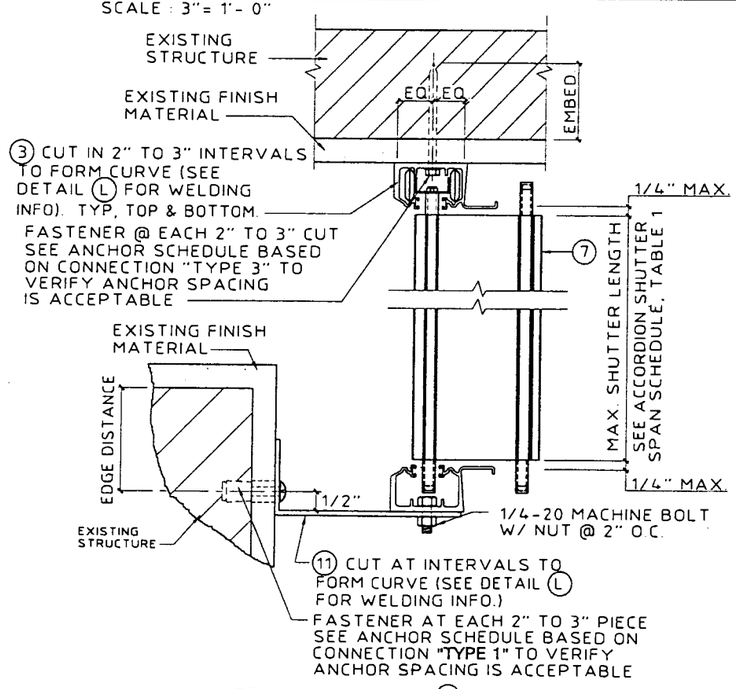

NOTE: CEILING HEADER (3) MAY BE USED TOP OR BOTTOM AS FIELD CONDITIONS REQUIRE.

K CURVED TRACK DETAIL

SCALE: 3" = 1'-0"

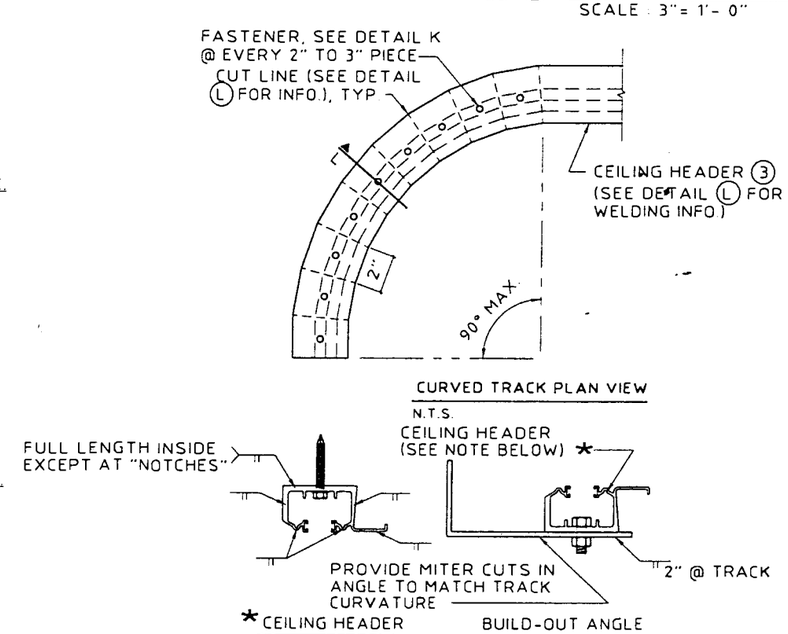

*NOTE: WHEN CEILING HEADER IS USED IN A BOTTOM MOUNTING CONDITION, WELDING LOCATIONS ARE THE SAME.

(USE ER4093 FILLER ALLOY FOR ALL WELDING.)

L WELDING DETAILS

SCALE: 3" = 1'-0"

APPROVED AS COMPLYING WITH THE SOUTH FLORIDA BUILDING CODE
DATE February 04, 2000
BY Helmy A. Mohr
PRODUCT CONTROL DIVISION
BUILDING CODE COMPLIANCE OFFICE
ACCEPTANCE NO. 99-1220.09

KNEZEVICH & ASSOCIATES, INC.
CONSULTING ENGINEERS • PRODUCT TESTING
1280 N. UNIVERSITY DRIVE, SUITE 180 • FORT LAUDERDALE, FL 33322
TEL: (954) 382-2800 • FAX: (954) 382-2989
WEBSITE: WWW.KNEZEVICH.COM • E-MAIL: KA@KNEZEVICH.COM

COPYRIGHT © 1999 KNEZEVICH & ASSOCIATES, INC.

6.8 SYSTEM LICENSED BY SOUTHERN SHUTTER ASSOCIATION

COASTAL 6.8" RESIDENTIAL ACCORDION

Coastal Shutters, Inc.
3789 N.W. 46th STREET
Miami, Florida 33142
ph(305) 634-5600

revisions

no	date	by	description
1	03/19/99	VJK	COUNTY COMMENTS

SSA I.D. # 1216999825 4D

V.J. KNEZEVICH
PROFESSIONAL ENGINEER
FL License No PE 0010983

DEC 21 1999

date 12/08/98	
scale AS NOTED	drawn by MC
design by VJK	checked by VJK

drawing no 99-909

sheet 4 of 6

12/21/99 14:37

ANCHOR SCHEDULE

FASTENER SPACING (INCHES) REQUIRED FOR VARIOUS DESIGN LOADS AND SPANS

EXISTING STRUCTURE	ANCHOR TYPE	LOAD (W) PSF MAX. (SEE NOTE 1)	MIN. 2" EDGE DISTANCE															MIN. 3" EDGE DISTANCE													
			SPANS UP TO 6' - 0" (SEE NOTE 1)					SPANS UP TO 8' - 8" (SEE NOTE 1)					SPANS UP TO 12' - 10" (SEE NOTE 1)					SPANS UP TO 6' - 0" (SEE NOTE 1)					SPANS UP TO 8' - 8" (SEE NOTE 1)					SPANS UP TO 12' - 10" (SEE NOTE 1)				
			CONNECTION TYPE					CONNECTION TYPE					CONNECTION TYPE					CONNECTION TYPE					CONNECTION TYPE					CONNECTION TYPE				
			1	2	3	4	5	1	2	3	4	5	1	2	3	4	5	1	2	3	4	5	1	2	3	4	5	1	2	3	4	5
CONCRETE	1/4"Φ ITW OR ELCO TAPCON W/ 1-3/4" MIN. EMBEDMENT (MIN. 3,000 PSI CONCRETE)	48.0	12	12	12	12	11	12	12	10	12	7	12	12	6	12	5	12	12	12	12	12	12	12	12	12	9	12	12	8	12	6
		62.0	12	12	11	12	8	12	12	7	12	5	12	8	5	10	4	12	12	12	12	10	12	12	10	12	7	12	9	6	12	4
		72.0	12	12	.9	12	7	12	12	6	12	5	11	5	4	7	3	12	12	12	12	9	12	12	8	12	6	12	6	5	8	4
		110.0	12	12	6	12	4	10	5	4	7	3	9	3	3	5		12	12	8	12	5	12	5	5	8	4	10	4	4	6	3
		200.0	9	3	3	5		9	3	3	5		9	3	3	5		10	4	4	6	3	10	4	4	6	3	10	4	4	6	3
	3/8"Φ POWERS RAWL DROP-IN & 3/8"Φ STAINLESS STEEL BOLT WITH 1-9/16" MIN. EMBEDMENT (MIN. 3,000 PSI CONCRETE)	48.0	12	12	12	12	16	12	12	12	12	16	12	12	12	12	12	12	12	12	12	16	12	12	12	12	16	12	12	12	12	16
		62.0	12	12	12	12	16	12	12	12	12	14	12	12	12	12	9	12	12	12	12	16	12	12	12	12	16	12	12	12	12	14
		72.0	12	12	12	12	16	12	12	12	12	12	12	12	10	12	8	12	12	12	12	16	12	12	12	12	16	12	12	12	12	12
		110.0	12	12	12	12	11	12	12	10	12	7	12	9	8	12	6	12	12	12	12	16	12	12	12	12	12	12	12	12	12	10
		200.0	12	9	8	12	6	12	9	8	12	6	12	9	8	12	6	12	12	12	12	10	12	12	12	12	10	12	12	12	12	10
	* 1/4"Φ POWERS FASTENING CALK-IN W/ 7/8" EMBED. & 1/4-20 STAINLESS STEEL MACHINE SCREW (MIN. 3,000 PSI CONCRETE)	48.0	12	12	12	12	12	12	12	10	12	8	12	12	7	12	5	12	12	12	12	12	12	12	12	12	12	12	12	11	12	8
		62.0	12	12	11	12	9	12	12	8	12	6	12	10	5	12	4	12	12	12	12	12	12	12	12	12	9	12	12	9	12	6
		72.0	12	12	10	12	8	12	12	7	12	5	12	7	4	10	3	12	12	12	12	12	12	12	11	12	8	12	8	7	12	5
		110.0	12	12	6	12	5	12	6	4	9	3	12	4	3	7	3	12	12	10	12	8	12	8	7	11	5	12	5	6	8	4
		200.0	12	4	3	7	3	12	4	3	7	3	12	4	3	7	3	12	5	6	8	4	12	5	6	8	4	12	5	6	8	4
	1/4"Φ ELCO CRETE FLEX W/ 1-3/4" MIN. EMBEDMENT (MIN. 3,300 P.S.I. CONCRETE)	48.0	12	12	12	12	12	12	12	12	12	12	12	12	11	12	8	12	12	12	12	12	12	12	12	12	12	12	12	12	12	11
		62.0	12	12	12	12	12	12	12	12	12	9	12	12	9	12	6	12	12	12	12	12	12	12	12	12	12	12	12	11	12	8
		72.0	12	12	12	12	12	12	12	11	12	8	12	8	7	12	5	12	12	12	12	12	12	12	12	12	10	12	10	10	12	7
		110.0	12	12	11	12	8	12	8	7	11	5	12	5	6	8	4	12	12	12	12	10	12	9	10	12	7	12	7	8	10	6
		200.0	12	5	6	8	4	12	5	6	8	4	12	5	6	8	4	12	7	8	10	6	12	7	8	10	6	12	7	8	10	6
HOLLOW CONCRETE BLOCK	1/4"Φ ITW OR ELCO TAPCON W/ 1-1/4" MIN. EMBEDMENT	48.0	12	12	8	12	5	10	10	5	10	3	7	7	3	7		12	12	9	12	6	11	11	6	11	4	7	7	4	7	3
		62.0	11	11	6	11	4	8	8	4	8	3	5	3		4		12	12	7	12	5	9	9	5	9	3	6	3	3	5	
		72.0	10	10	5	10	3	7	7	3	7		4			3		11	11	6	11	4	7	7	4	7	3	5		3	3	
		110.0	6	6	3	6		4			3		3					7	7	4	7		5		3	3		4				
		200.0	3					3					3					4					4					4				
	* 1/4"Φ POWERS FASTENING CALK-IN W/ 7/8" EMBED. & 1/4-20 STAINLESS STEEL MACHINE SCREW	48.0	12	12	8	12	6	12	12	6	12	4	9	9	4	9	3	12	12	12	12	9	12	12	9	12	6	11	11	6	11	4
		62.0	12	12	6	12	5	10	10	4	10	3	7	4	3	5		12	12	10	12	7	12	12	7	12	5	8	5	4	7	3
		72.0	12	12	5	12	4	9	9	4	9		6			4		12	12	9	12	6	11	11	6	11	4	7	3	4	5	
		110.0	8	8	3	8		5			3		5					10	10	5	10	4	7	3	4	4		6		3	3	
		200.0	5					5					5					6		3	3		6		3	3		6		3	3	
	1/4"Φ ELCO CRETE FLEX W/ 1-1/4" MIN. EMBEDMENT	48.0	12	12	12	12	11	12	12	11	12	7	12	12	7	12	5	12	12	12	12	11	12	12	11	12	8	12	12	7	12	5
		62.0	12	12	12	12	8	12	12	8	12	6	11	7	5	9	4	12	12	12	12	9	12	12	8	12	6	12	7	5	10	4
		72.0	12	12	10	12	7	12	12	7	12	5	9	4	4	6	3	12	12	10	12	7	12	12	7	12	5	10	5	5	7	3
		110.0	12	12	6	12	4	9	4	4	6	3	8	3	4	4		12	12	7	12	5	10	4	4	6	3	8	3	4	5	3
		200.0	8	3	4	4		8	3	4	4		8	3	4	4		8	3	4	5	3	8	3	4	5	3	8	3	4	5	3

ANCHOR SCHEDULE

FASTENER SPACING (INCHES) REQUIRED FOR VARIOUS DESIGN LOADS AND SPANS

EXISTING STRUCTURE	ANCHOR TYPE	LOAD (W) PSF MAX. (SEE NOTE 1)	MIN. 3/4" EDGE DISTANCE														
			SPANS UP TO 6' - 0" (SEE NOTE 1)					SPANS UP TO 8' - 8" (SEE NOTE 1)					SPANS UP TO 12' - 10" (SEE NOTE 1)				
			CONNECTION TYPE					CONNECTION TYPE					CONNECTION TYPE				
			1	2	3	4	5	1	2	3	4	5	1	2	3	4	5
WOOD	1/4"Φ WOOD LAG W/ 1-3/4" MIN. THREAD EMBED. SHEAR PARALLEL OR PERPENDICULAR TO WOOD GRAIN	48.0	12	12	10	12	8	12	12	7	12	6	12	12	4	12	4
		62.0	12	12	8	12	6	12	12	5	12	4	12	10	3	12	3
		72.0	12	12	7	12	5	12	12	4	12	4	12	6	3	9	
		110.0	12	12	4	12	3	12	6	3	9		11	4		7	
		200.0	11	4		7		11	4		7		11	4		7	
	* 7/16"Φ WOOD BUSHING W/ 7/8" MIN. EMBEDMENT STAINLESS STEEL STEEL MACHINE SCREW	48.0	12	12		12		12	12		12		10	10		10	
		62.0	12	12		12		12	12		12		8	5		6	
		72.0	12	12		12		10	10		10		7	3		4	
		110.0	9	9		9		6	3		4		5			3	
		200.0	5			3		5			3		5			3	

ANCHOR NOTES:

1. SPANS & LOADS SHOWN HERE ARE FOR DETERMINING ANCHOR SPACING ONLY. ALLOWABLE SHUTTER SPANS FOR SPECIFIC LOADS MUST BE LIMITED TO THOSE SHOWN IN TABLE 1.
2. ENTER TABLE BASED ON THE EXISTING STRUCTURE MATERIAL, ANCHOR TYPE AND EDGE DISTANCE. SELECT DESIGN LOAD GREATER THAN OR EQUAL TO NEGATIVE DESIGN LOAD ON SHUTTER AND SELECT SPAN GREATER THAN OR EQUAL TO SHUTTER SPAN.
3. EXISTING STRUCTURE MAY BE CONCRETE, HOLLOW BLOCK OR WOOD FRAMING. REFERENCE ANCHOR SCHEDULE FOR PROPER ANCHOR TYPE BASED ON TYPE OF EXISTING STRUCTURE AND APPROPRIATE CONNECTION TYPE. SEE CONNECTION DETAILS FOR IDENTIFICATION OF CONNECTION TYPE.
4. ANCHORS SHALL BE INSTALLED IN ACCORDANCE WITH MANUFACTURERS' RECOMMENDATIONS.
5. MINIMUM EMBEDMENT AND EDGE DISTANCE EXCLUDES WALL FINISH OR STUCCO.
6. WHERE EXISTING STRUCTURE IS WOOD FRAMING, WOOD FRAMING CONDITIONS VARY. FIELD VERIFY THAT FASTENERS ARE INTO ADEQUATE WOOD FRAMING MEMBERS, NOT PLYWOOD. FASTENING TO PLYWOOD IS ACCEPTABLE ONLY FOR SIDE CLOSURE PIECES.
7. WHERE LAG SCREWS FASTEN TO NARROW FACE OF STUD FRAMING, FASTENER SHALL BE LOCATED IN CENTER OF NOMINAL 2"x4" (MIN.) WOOD STUD. 3/4" EDGE DISTANCE IS ACCEPTABLE FOR WOOD FRAMING. WOOD STUD SHALL BE "SOUTHERN PINE" G=0.55 OR GREATER DENSITY. LAG SCREWS SHALL HAVE PHILLIPS PAN HEAD OR HEX HEAD.
8. MACHINE SCREWS SHALL HAVE MINIMUM OF 1/2" ENGAGEMENT OF THREADS IN BASE ANCHOR AND MAY HAVE EITHER A PAN HEAD, TRUSS HEAD, OR WAFER HEAD (SIDEWALK BOLT), U.O.N.
9. DESIGNATES ANCHOR CONDITIONS WHICH ARE NOT ACCEPTABLE USES.
10. * DESIGNATES ANCHOR CONDITIONS WHICH ARE REMOVABLE BY REMOVING MACHINE SCREW, NUT OR WASHERED WINGNUT.

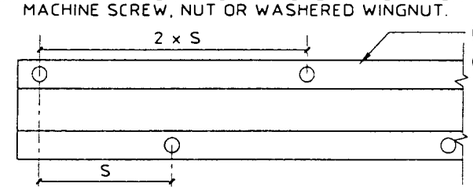

② HEADER/SILL OR ⑤/⑥ COMBINATION

NOTE: "S" INDICATES ANCHOR SCHEDULE SPACING.

SPACING DIAGRAM FOR CONNECTION TYPE 1 W/ PIECE ② AND TYPE 3 W/ OUTSIDE ANCHORS ON PIECE ⑥

SCALE: 3" = 1'-0"

APPROVED AS COMPLYING WITH THE SOUTH FLORIDA BUILDING CODE
DATE February 04, 2000
BY [signature]
PRODUCT CONTROL DIVISION
BUILDING CODE COMPLIANCE OFFICE
ACCEPTANCE NO. 99-1220.09

KNEZEVICH & ASSOCIATES, INC.
CONSULTING ENGINEERS • PRODUCT TESTING
1260 N. UNIVERSITY DRIVE, SUITE 180 • FORT LAUDERDALE, FL 33322
TEL: (954) 382-2800 • FAX: (954) 382-2989
WEBSITE: WWW.KNEZEVICH.COM • E-MAIL: KA@KNEZEVICH.COM

COPYRIGHT © 1999 KNEZEVICH & ASSOCIATES, INC.

& S SYSTEM LICENSED BY SOUTHERN SHUTTER ASSOCIATION

COASTAL 6.8" RESIDENTIAL ACCORDION

Coastal Shutters, Inc.
3789 N.W. 46th STREET
Miami, Florida 33142
ph(305) 634-5600

no.	date	by	description
1	10/19/99	VJK	COUNTY COMMENTS

revisions

SSA I.D.# 1216999825 4D

V.J KNEZEVICH
PROFESSIONAL ENGINEER
FL License No: PE 0070983

DEC 21 1999

date 12/08/98	
scale AS NOTED	drawn by MC
design by VJK	checked by VJK

drawing no. 99-909

sheet 5 of 6

12/21/99 14:37

TABLE 2

MINIMUM SEPARATION FROM GLASS

POSITIVE DESIGN LOAD (W) (PSF)	ACTUAL SHUTTER SPAN (L) (FT. - IN)	MIN. SEPARATION FROM GLASS FOR INSTALLATIONS LESS THAN OR EQUAL TO 30' ABOVE GRADE (IN.)	MIN. SEPARATION FROM GLASS FOR INSTALLATIONS GREATER THAN 30' ABOVE GRADE (IN.)
40.0	8'-3"	3-1/8	1-5/8
	10'-0"	3-3/4	2-1/8
	11'-11"	3-3/4	3
50.0	8'-3"	3-1/8	1-3/4
	10'-0"	3-3/4	2-3/8
	11'-4"	3-3/4	3
60.0	5'-0"	3-1/8	1-1/4
	8'-3"	3-1/8	1-7/8
	10'-9"	3-3/4	3
70.0	5'-0"	3-1/8	1-1/8
	8'-3"	3-1/8	1-7/8
	10'-5"	3-3/4	3
80.0	6'-0"	3-1/8	1-3/8
	8'-3"	3-1/8	2-1/8
	9'-4"	3-3/4	2-5/8
90.0	5'-0"	3-1/8	1-3/8
	7'-0"	3-1/8	1-5/8
	8'-3"	3-1/8	2-1/8
100.0	5'-0"	3-1/8	1-3/8
	7'-0"	3-1/8	1-3/4
	8'-3"	3-1/8	2-1/4
110.0	5'-0"	3-1/8	1-3/8
	7'-0"	3-1/8	1-7/8
	8'-3"	3-1/8	2-3/8
120.0	5'-0"	3-1/8	1-3/8
	7'-0"	3-1/8	1-7/8
	8'-3"	3-1/8	2-1/4
130.0	5'-0"	3-1/8	1-3/8
	7'-0"	3-1/8	1-7/8
	8'-3"	3-1/8	2-1/2

TABLE 1

ACCORDION SHUTTER SPAN SCHEDULE

NEGATIVE DESIGN LOAD W (PSF)	FOR ALL MOUNTING CONDITIONS L max. (FT-IN)
30.0	12-10
35.0	12-4
40.0	11-11
45.0	11-7
50.0	11-3
55.0	11-0
60.0	10-9
65.0	10-6
70.0	10-4
72.0	10-3
75.0	10-2
80.0	9-11
90.0	9-7
100.0	9-3
110.0	9-0
120.0	8-8
130.0	8-4
133.0	8-3
140.0	7-11
150.0	7-5
160.0	6-11
170.0	6-6
180.0	6-2
190.0	5-10
200.0	5-6

TABLE 1 NOTES:

1. ENTER TABLE 1 WITH NEGATIVE DESIGN LOAD TO DETERMINE MAXIMUM SHUTTER SPAN. POSITIVE LOADS LESS THAN OR EQUAL TO THE NEGATIVE LOAD ARE ACCEPTABLE.
2. FOR DESIGN LOADS BETWEEN TABULATED VALUES, USE NEXT HIGHER LOAD OR LINEAR INTERPOLATION MAY BE USED TO DETERMINE ALLOWABLE SPANS.

APPROVED AS COMPLYING WITH THE SOUTH FLORIDA BUILDING CODE
DATE February 04 2000
BY Helmy A. Malar
PRODUCT CONTROL DIVISION
BUILDING CODE COMPLIANCE OFFICE
ACCEPTANCE NO. 99-1220.09

KNEZEVICH & ASSOCIATES, INC.
CONSULTING ENGINEERS • PRODUCT TESTING
1280 N. UNIVERSITY DRIVE, SUITE 180 • FORT LAUDERDALE, FL 33322
TEL: (954) 382-2800 • FAX: (954) 382-2989
WEBSITE: WWW.KNEZEVICH.COM • E-MAIL: KA@KNEZEVICH.COM
COPYRIGHT © 1999 KNEZEVICH & ASSOCIATES, INC.
6.8 SYSTEM LICENSED BY SOUTHERN SHUTTER ASSOCIATION

COASTAL 6.8"
RESIDENTIAL ACCORDION

Coastal Shutters, Inc.
3789 N.W. 46th STREET
Miami, Florida 33142
ph(305) 634-5600

revisions

no	date	by	description
1	03/19/99	VJK	COUNTY COMMENTS

SSA I.D.# 12169998254D

V.J. KNEZEVICH
PROFESSIONAL ENGINEER
FL License No. PE 0010983
DEC 21 1999

date 12/08/98
scale AS NOTED
drawn by MC
design by VJK
checked by VJK
drawing no. 99-909
sheet 6 of 6

12/21/99 14:38