MIAMI-DADE

MIAMI-DADE COUNTY, FLORIDA
METRO-DADE FLAGLER BUILDING

BUILDING CODE COMPLIANCE OFFICE
METRO-DADE FLAGLER BUILDING
140 WEST FLAGLER STREET, SUITE 1603
MIAMI, FLORIDA 33130-1563
(305) 375-2901 FAX (305) 375-2908

CONTRACTOR LICENSING SECTION
(305) 375-2527 FAX (305) 375-2558

CONTRACTOR ENFORCEMENT SECTION
(305) 375-2966 FAX (305) 375-2908

PRODUCT CONTROL DIVISION
(305) 375-2902 FAX (305) 372-6339

PRODUCT CONTROL NOTICE OF ACCEPTANCE

Binnings Pan American
2805 N.E. 185 St.
Miami FL 33163

Your application for Product Approval of:
Series PA-16 Aluminum Horizontal Sliding Window
under Chapter 8 of the Code of Miami-Dade County governing the use of Alternate Materials and Types of Construction, and completely described herein, has been recommended for acceptance by the Miami-Dade County Building Code Compliance Office (BCCO) under the conditions specified herein.

This approval shall not be valid after the expiration date stated below. BCCO reserves the right to secure this product or material at anytime from a jobsite or manufacturer's plant for quality control testing.
If this product or material fails to perform in the approved manner, BCCO may revoke, modify, or suspend the use of such product or material immediately. BCCO reserves the right to revoke this approval, if it is determined BCCO that this product or material fails to meet the requirements of the South Florida Building Code.

The expense of such testing will be incurred by the manufacturer.

Acceptance No.: 99-1227.05

Expires: 01/16/2003

Raul Rodriguez
Chief Product Control Division

THIS IS THE COVERSHEET, SEE ADDITIONAL PAGES FOR SPECIFIC AND GENERAL CONDITIONS

BUILDING CODE & PRODUCT REVIEW COMMITTEE

This application for Product Approval has been reviewed by the BCCO and approved by the Building Code and Product Review Committee to be used in Dade County, Florida under the conditions set forth above.

Francisco J. Quintana, R.A.
Director
Miami-Dade County
Building Code Compliance Office

Approved: 02/11/2000

Internet mail address: postmaster@buildingcodeonline.com **Homepage: http://www.buildingcodeonline.com**

Binnings Pan American

ACCEPTANCE No.: **99-1227.05**

APPROVED : **FEB 1 1 2000**

EXPIRES : **January 16, 2003**

NOTICE OF ACCEPTANCE: SPECIFIC CONDITIONS

1. SCOPE

1.1 This **renews** the Notice of Acceptance No. 96-1120.01 which was issued on January 16, 1997. It approves an aluminum horizontal sliding window, as described in Section 2 of this Notice of Acceptance, designed to comply with the South Florida Building Code (SFBC), 1994 Edition for Miami-Dade County, for the locations where the pressure requirements, as determined by SFBC Chapter 23, do not exceed the Design Pressure Rating values indicated in the approved drawings.

2. PRODUCT DESCRIPTION

2.1 The **Series PA-16 Aluminum Horizontal Sliding Window** and its components shall be constructed in strict compliance with the following documents: Drawing No **PA-16PCS**, revision A dated 1/15/00, titled "PA-16 XO/OX Assembly Drawing" Sheets 1 through 10 of 10 dated 6/5/95, signed and sealed by Wm. M. Meyers, P.E., bearing the Miami-Dade County Product Control approval stamp with the Notice of Acceptance number and approval date by the Miami-Dade County Product Control Division. These documents shall hereinafter be referred to as the approved drawings.

3. LIMITATIONS

3.1 This approval applies to single unit applications only, as shown in approved drawings.

3.2 For Design Pressure Rating vs. Window Size, see Comparative Analysis Tables in approved drawings.

4. INSTALLATION

4.1 The aluminum horizontal sliding window and its components shall be installed in strict compliance with the approved drawings.

4.2 Hurricane protection system (shutters): the installation of this unit **will require** a hurricane protection system.

5. LABELING

5.1 Each unit shall bear a permanent label with the manufacturer's name or logo, city, state and following statement: "Miami-Dade County Product Control Approved".

6. BUILDING PERMIT REQUIREMENTS

6.1 Application for building permit shall be accompanied by copies of the following:

- **6.1.1** This Notice of Acceptance
- **6.1.2** Duplicate copies of the approved drawings, as identified in Section 2 of this Notice of Acceptance, clearly marked to show the components selected for the proposed installation.
- **6.1.3** Any other documents required by the Building Official or the South Florida Building Code (SFBC) in order to properly evaluate the installation of this system.

Manuel Perez

Manuel Perez, P.E. Product Control Examiner
Product Control Division

Binnings Pan American

ACCEPTANCE No.: 99-1227.05

APPROVED : FEB 1 1 2000

EXPIRES : January 16, 2003

NOTICE OF ACCEPTANCE: STANDARD CONDITIONS

1. Renewal of this Acceptance (approval) shall be considered after a renewal application has been filed and the original submitted documentation, including test supporting data, engineering documents, are no older than eight (8) years.

2. Any and all approved products shall be permanently labeled with the manufacturer's name, city, state, and the following statement: "Miami-Dade County Product Control Approved", or as specifically stated in the specific conditions of this Acceptance.

3. Renewals of Acceptance will not be considered if:
   a) There has been a change in the South Florida Building Code affecting the evaluation of this product and the product is not in compliance with the code changes;
   b) The product is no longer the same product (identical) as the one originally approved;
   c) If the Acceptance holder has not complied with all the requirements of this acceptance, including the correct installation of the product;
   d) The engineer who originally prepared, signed and sealed the required documentation initially submitted is no longer practicing the engineering profession.

4. Any revision or change in the materials, use, and/or manufacture of the product or process shall automatically be cause for termination of this Acceptance, unless prior written approval has been requested (through the filing of a revision application with appropriate fee) and granted by this office.

5. Any of the following shall also be grounds for removal of this Acceptance:
   a) Unsatisfactory performance of this product or process.
   b) Misuse of this Acceptance as an endorsement of any product, for sales, advertising or any other purpose.

6. The Notice of Acceptance number preceded by the words Miami-Dade County, Florida, and followed by the expiration date may be displayed in advertising literature. If any portion of the Notice of Acceptance is displayed, then it shall be done in its entirety.

7. A copy of this Acceptance as well as approved drawings and other documents, where it applies, shall be provided to the user by the manufacturer or its distributors and shall be available for inspection at the job site at all time. The engineer need not reseal the copies.

8. Failure to comply with any section of this Acceptance shall be cause for termination and removal of Acceptance.

9. This Notice of Acceptance consists of pages 1, 2 and this last page 3.

Manuel Perez

Manuel Perez, P.E. Product Control Examiner
Product Control Division

END OF THIS ACCEPTANCE

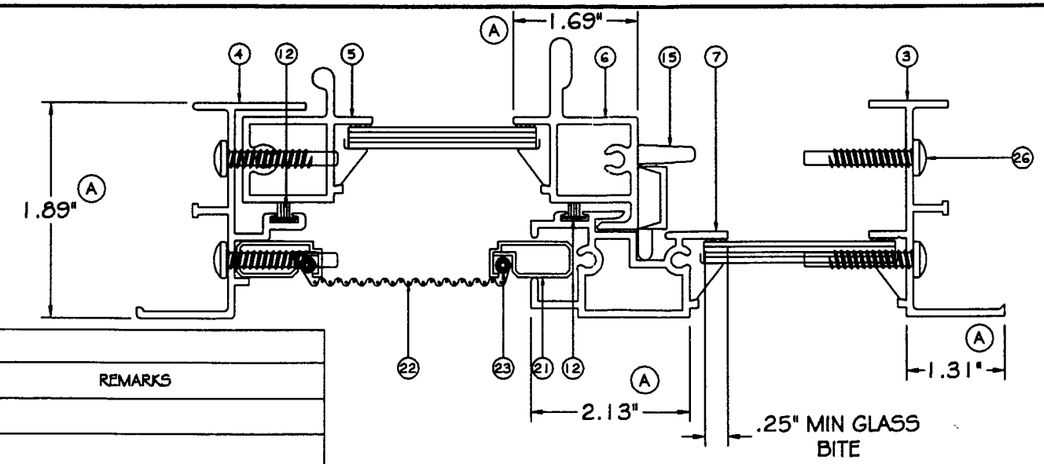

HORIZONTAL SECTION OF XO\OX

3/4" SCALE

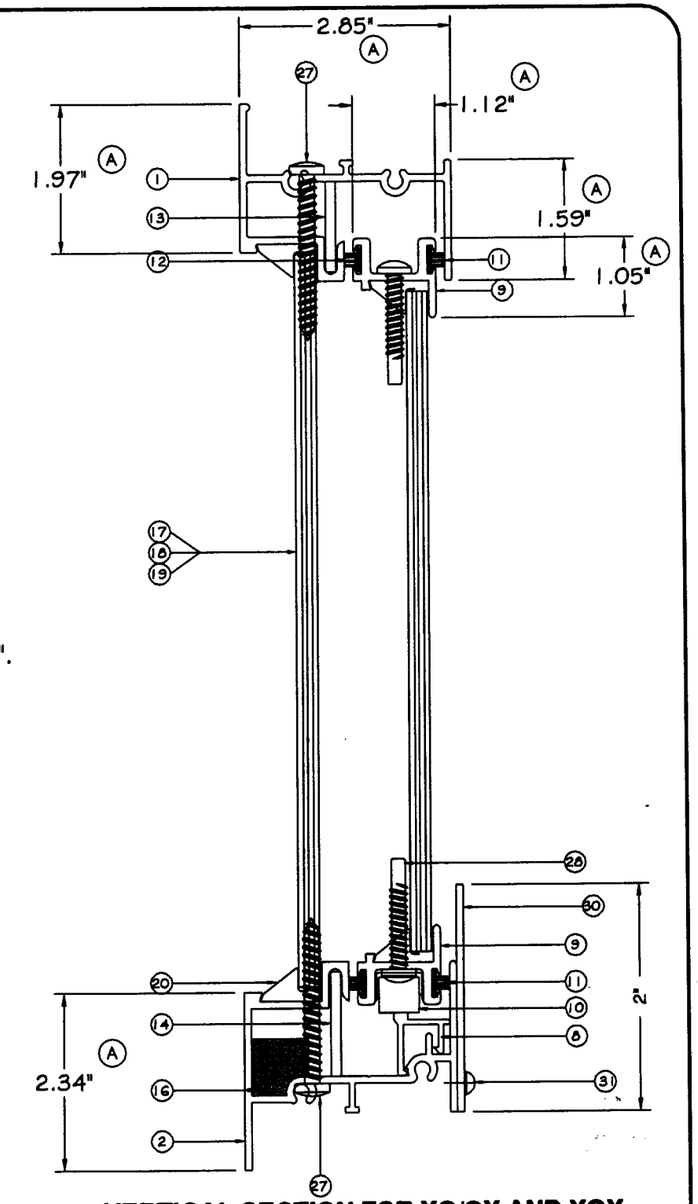

VERTICAL SECTION FOR XO/OX AND XOX

3/4" SCALE

NOTE:

(A) 1. MINIMUM EXTRUSION THICKNESS IS .050".
2. MINIMUM GLASS BITE IS .250".

APPROVED AS COMPLYING WITH THE SOUTH FLORIDA BUILDING CODE
DATE February 11, 2000
BY Manuel Perez
PRODUCT CONTROL DIVISION
BUILDING CODE COMPLIANCE OFFICE
ACCEPTANCE NO. 99-1227.05

BILL OF MATERIAL

PART NO.	ITEM	EXTRUSION NUMBER	MACHINING NUMBER	MATERIAL	QUANTITY	REMARKS
1	FRAME HEAD	16-63	16-63-1	6063 T-5 ALUM.	1	
2	FRAME SILL	16-62	16-62-1	6063 T-5 ALUM.	1	
3	FRAME JAMB	16-18	16-18-1	6063 T-5 ALUM.	1	
4	FRAME JAMB	16-20	16-20-1	6063 T-5 ALUM.	1	
5	VENT SIDE RAIL	16-39A	16-39-1	6063 T-5 ALUM.	1	
6	VENT MT'G RAIL	16-59	16-59-1	6063 T-5 ALUM.	1	
7	FRAME MT'G RAIL	16-60	16-60-1	6063 T-5 ALUM.	1	FRAME MT'G RAIL
8	TRACK INSERT	16-61	16-61-1	6063 T-5 ALUM.	1	
9	VENT HEAD & SILL	16-05	16-05-1	6063 T-5 ALUM.	2	
10	ROLLER ASSEMBLY	16-6004			2	
11	POLY PILE WSTP	8-2004		PILE	2	USED IN VENT TOP AND BOTTOM RAIL INTERIOR LEG ONLY
12	POLY PILE WSTP WITH FIN	8-2010		FIN SEAL	4	USED IN VENT TOP AND BOTTOM RAIL EXT. LEG, IN JAMB AND IN FRAME MT'G RAIL
13	HEAD INSERT	16-6003		6063 T-5 ALUM.	1	
14	SILL INSERT	16-6000		6063 T-5 ALUM.	1	
15	SWEEP LOCK	16-6008		ZINK	2	
16	WEEP BAFFLE	4802110		OPEN CELL FOAM TAPE	AS REQ'D	INSTALLED AT WEEP HOLES
17	3/16" GLAZING	4710103			AS REQ'D	USED IN FIXED LITE OF 84 1/8" X 49" XOX
18	DSB GLAZING	4710102			AS REQ'D	USED IN 61" X 49" OX AND IN THE FIXED LITE OF 108" X 37" XOX.
19	SSB GLAZING	4710101				USED IN 108" X 37" XOX, 49" X 49" XO.USED ONLY IN VENTS OF 84 1/8 X 49 XOX & 108 X 37 XOX.
20	GLAZING BEAD	8-059		ALUM.	8	
21	SCREEN FRAME	19-011		ALUM.	4	
22	SCREEN MESH	1816		FIBERGLASS	AS REQ'D	
23	SCREEN SPLINE	4802004		VINYL	AS REQ'D	
24	SCREEN CORNER	3-3049		PLASTIC	4	
25	SCREEN TENSION SPRING	18-4001B		.047 GALV. HD.DR.WIRE	2	
26	FRAME ASSEMBLY SCREW	4801014		STEEL	8	#8 X 1" PP SMS
27	MEETING RAIL ASSEMBLY SCREW	4801070		STEEL	4	#8 X 1 1/2" PHPH
28	VENT ASSEMBLY SCREW	4801070		STEEL	4	#8 X 1" PP SMS
29	SCREEN FINGER PULL	14-5003A		NYLON	2	
30	SILL RISER	—		ALUM.	1	2" X .062" THICK (TYPE "A" ONLY)
31	SILL RISER SCREW	—		STEEL	18" CL	#6 X 3/8" SELF TAPPING

ROBT. E. FISHER
WM. M. MEYERS, P.E.
Consulting Engineers
9301 N.E. 6th Ave. C-300
Miami Shores, FL 33138
(305) 758-3117 557-4006 Fax 362-6282

Wm M Meyers 01/12/00

Binnings Pan American
P.O. Box 630038
2805 N.E. 185th Street
Miami, Florida 33163
(305)931-2350

Revisions: A - ADDED DIMENSIONS	Draw Class: ASSEM.	Part Class: —	Prod Category: H.S.	Series/Model: PA-16	Item:
Material:	PA-16 XO/OX ASSEMBLY DRAWING				
Drawn By: PJS / Date: 6-5-95					
Revised By: SJR / Date: 1/15/00	Part Number:	Drawing Number: PA-16PCS1A		Revision Level: A	

Sheet: 1 of 10

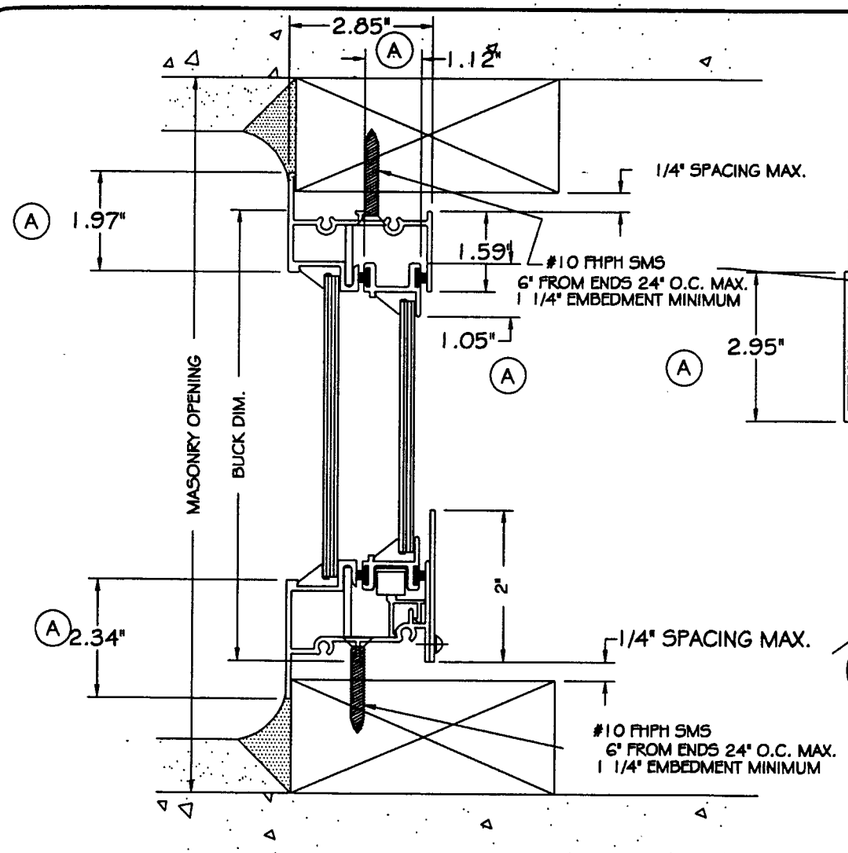

1 PA-16 2X WOOD BUCK VERT. INSTALLATION
HALF SCALE

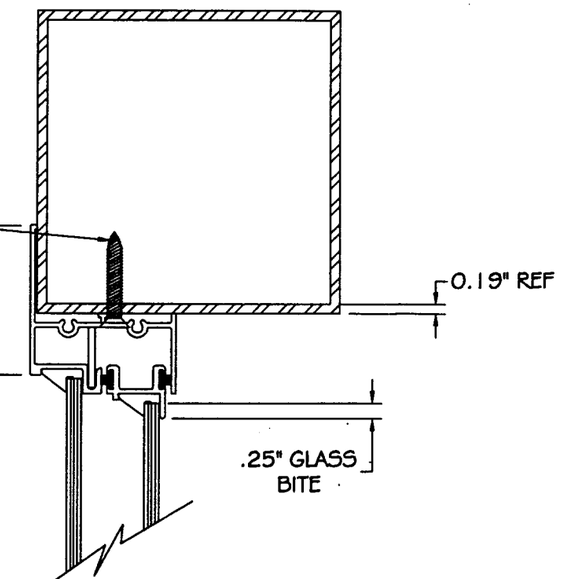

1A PA-16 STEEL RUNNER INSTALLATION
HALF SCALE

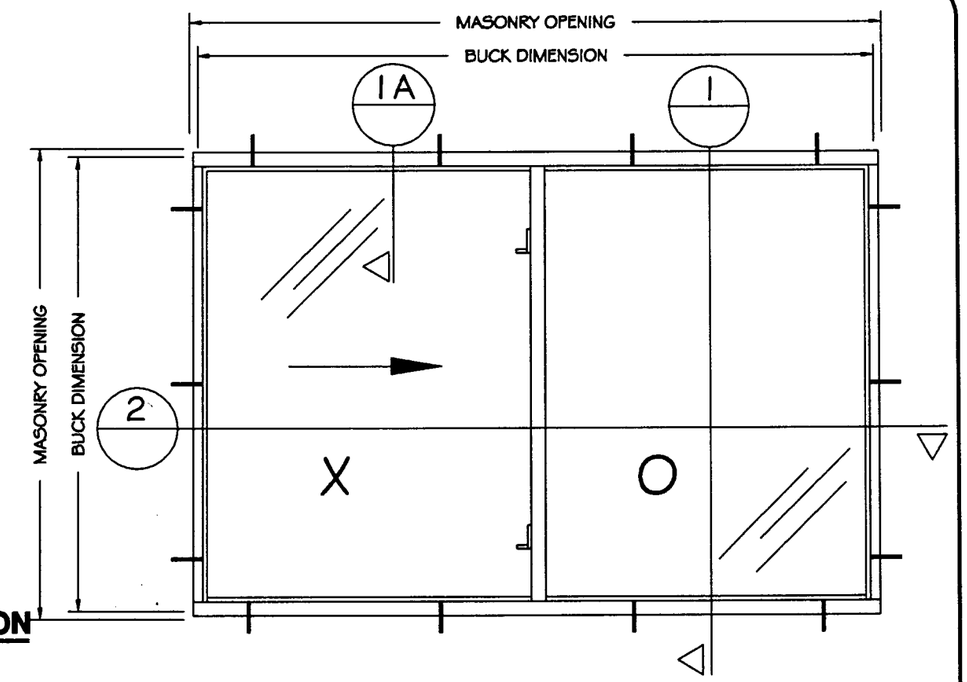

DENOTES FACTORY DRILLED INSTAL. HOLES
DENOTES FIELD DRILLED INSTAL. HOLES

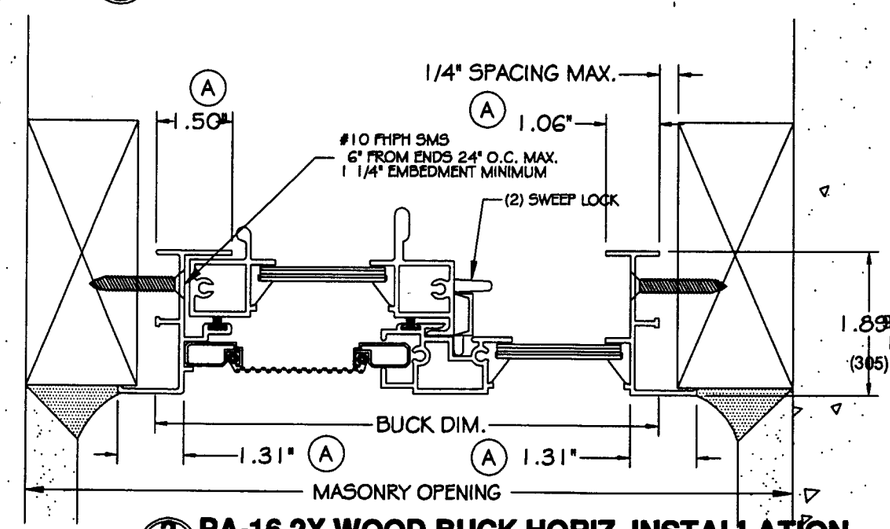

2 PA-16 2X WOOD BUCK HORIZ. INSTALLATION
HALF SCALE

GENERAL NOTES:

1. Horizontal Slider has been designed in accordance with the Dade County, 1994 edition of the South Florida Building Code. Wind speed considered is 110 mph, importance factor is 1.05, exposure factor is "C" and the mean roof hieght of the building hieght is less than 60'.
2. Horizontal Sliders installed in Dade and Broward County must have hurricane protective system, such as storm panels.
3. All aluminum extrusions shall be 6063-T5 unless noted otherwise.
4. Glazing material to be 3/32", 1/8" or 3/16" annealed or tempered as required.
5. Fasteners will be carbon steel with zinc coatings, or Tap Cons. Minimum embedment must be 1 1/4" regardless of substrate.
6. Anchoring shall be as idicated on page 4.
7. 1" X P.T., 2" x P.T. wood buck (shown) and steel runner responsibility of others. Buck must withstand loads imposed by wind loads and glazing systems.
8. Lab number: Test Size Design pressure: Water test pressure:

16674	61" x 49"	+53.33/-53.33	6.0 (1 5/8"sill)/7.92 (2" sill)
16673	109" x 37"	+53.33/-53.33	6.0 (1 5/8"sill)/7.92 (2" sill)
16680	49" X 49"	+40/-40	6.0 (1 5/8"sill)/7.92 (2" sill)

APPROVED AS COMPLYING WITH THE SOUTH FLORIDA BUILDING CODE
DATE 11, 2000
BY Manuel Sere
PRODUCT CONTROL DIVISION
BUILDING CODE COMPLIANCE OFFICE
ACCEPTANCE NO. 99-1227.05

ROBT. E. FISHER
WM. M. MEYERS, P.E.
Consulting Engineers
9301 N.E. 6th Ave. C-300
Miami Shores, FL 33138
(305) 758-3117 557-4006 Fax 362-6282

01/18/00

Binnings Pan American
P.O. Box 630038
2805 N.E. 185th Street
Miami, Florida 33163
(305)931-2350

Revisions: A - ADDED DIMENSIONS	Draw Class: SHOP	Part Class:	Prod Category: H.S.	Series/Model: PA-16	Item:	Sheet: 2 of 10
Material:	PA-16 XO/OX INSTALLATION DRAWING				
Drawn By: PJS / Date: 6-5-95					
Revised By: SJR / Date: 1/15/00	Part Number:	Drawing Number: PA-16PCS2A	Revision Level: A		

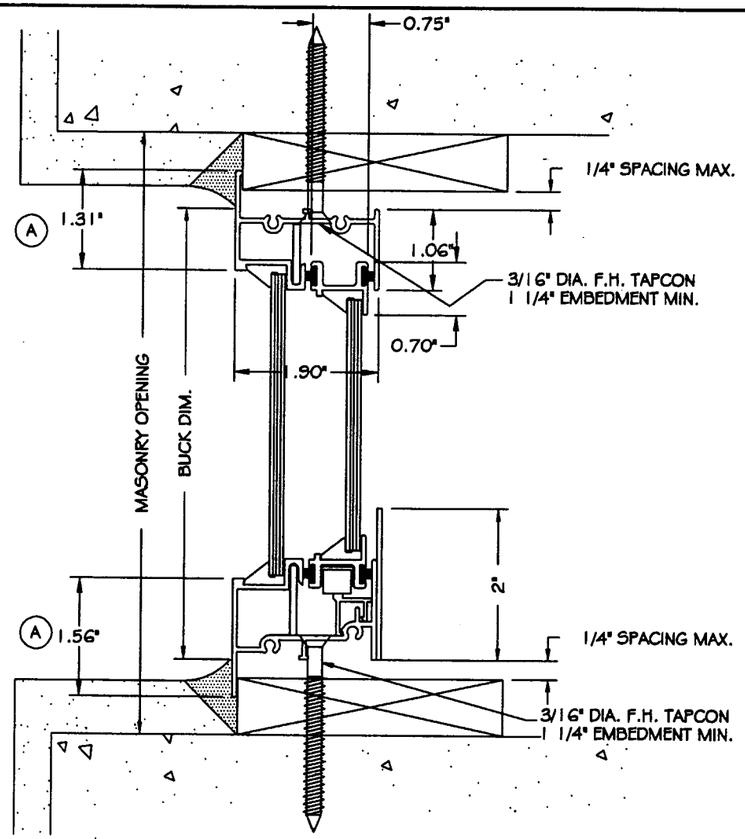

1 VERTICAL SECT. HORIZ. SLIDER

HALF SCALE

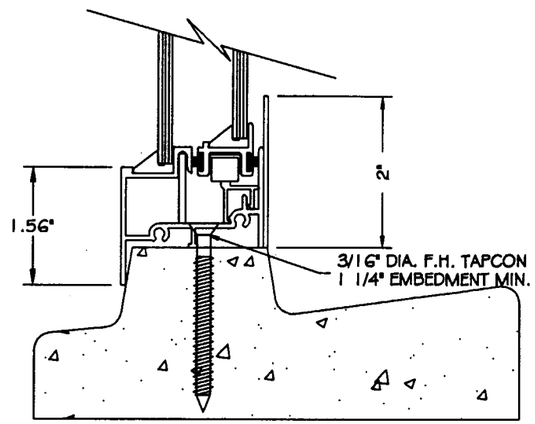

1A PA-16 PRECAST SILL INSTALLATION

HALF SCALE

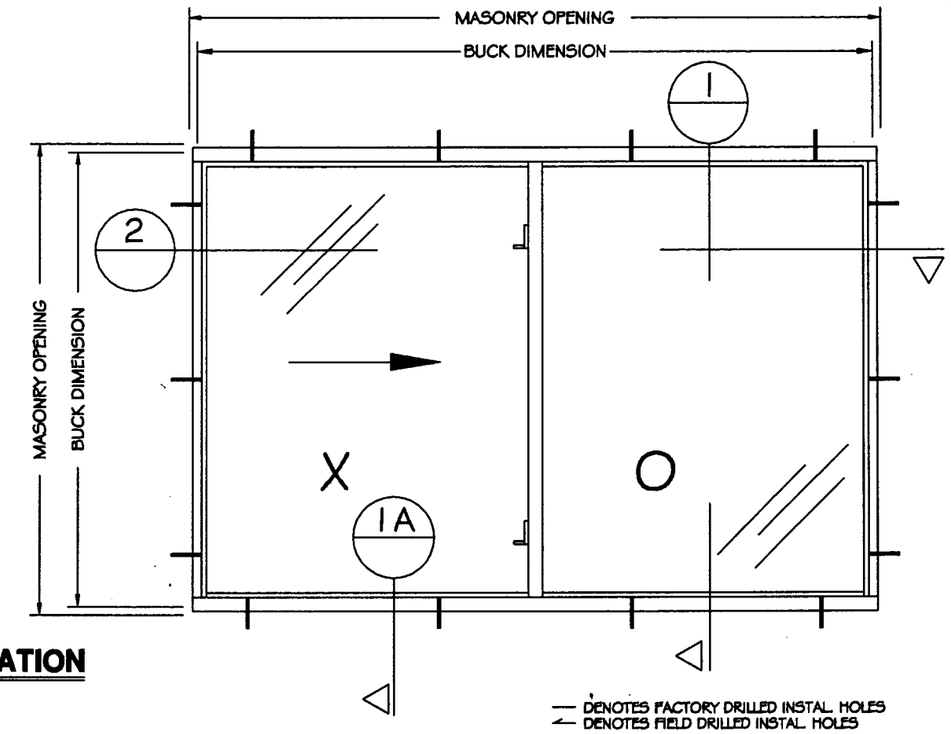

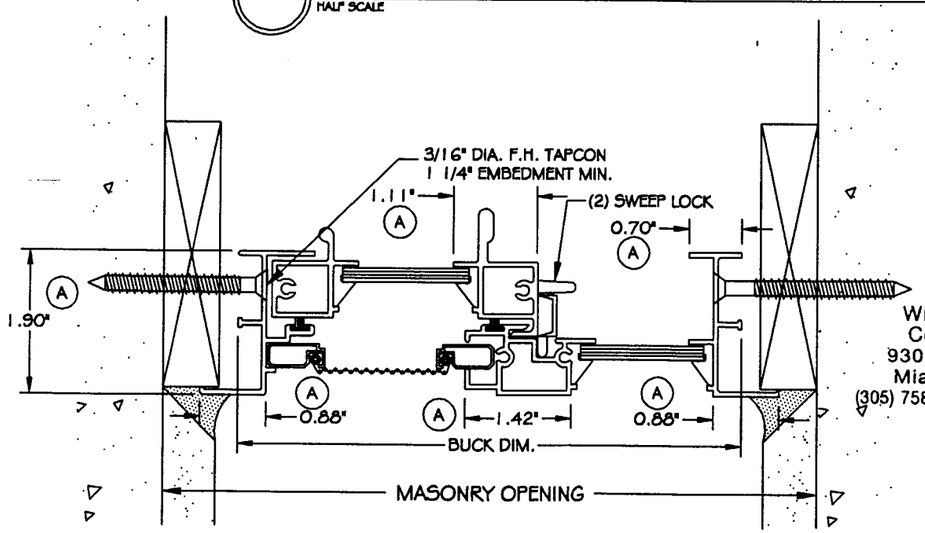

2 HORIZONTAL SECT. HORIZ. SLIDER

HALF SCALE

NOTE: General notes on sheet 2 apply.

APPROVED AS COMPLYING WITH THE
SOUTH FLORIDA BUILDING CODE
DATE February 11, 2000
BY Manuel Perez
PRODUCT CONTROL DIVISION
BUILDING CODE COMPLIANCE OFFICE
ACCEPTANCE NO. 99-1227.05

ROBT. E. FISHER
WM. M. MEYERS, P.E.
Consulting Engineers
9301 N.E. 6th Ave. C-300
Miami Shores, FL 33138
(305) 758-3117 557-4006 Fax 362-6282

01/13/00

Binnings Pan American
P.O. Box 630038
2805 N.E. 185th Street
Miami, Florida 33163
(305)931-2350

Revisions: A - ADDED DIMENSIONS	Draw Class: SHOP	Part Class: ———	Prod Category: H.S.	Series/Model: PA-16	Item:	Sheet: 3 of 10
Material:	PA-16 XO/OX INSTALLATION DRAWING					
Drawn By: PJS / Date: 6-5-95						
Revised By: SJR / Date: 1/15/00	Part Number: ---		Drawing Number: PA-16PCS3A			Revision Level: A

PA16A.01 Horizontal Roller Window

3/16" Annealed or Tempered Glazing at Fixed Lite
and 1/8" (DSB) Annealed or Tempered Glazing at Vents w/ 2" Sill Riser

Note: The installation of this unit requires a hurricane protective system

Call Size	Buck Width	Buck Height	Max Vent Width	Head & Sill Fasteners	Typical Spacing	Jamb Fasteners	Typical Spacing	Results	
								Pressure (+)	Pressure (−)
2121	24.000	24.000	12.000	2	12.750	2	17.626	52.80	−115.16
3121	36.000	24.000	18.000	3	12.375	2	17.626	52.80	−95.97
3921	44.000	24.000	22.000	3	16.375	2	17.626	52.80	−88.99
4121	48.000	24.000	24.000	3	18.375	2	17.626	52.80	−86.37
53.125 x 25	52.125	24.000	26.000	4	13.625	2	17.626	52.80	−84.09
3131	36.000	36.000	18.000	3	12.375	3	14.813	52.80	−76.77
3931	44.000	36.000	22.000	3	16.375	3	14.813	52.80	−69.80
4131	48.000	36.000	24.000	3	18.375	3	14.813	52.80	−67.18
53.125 x 37	52.125	36.000	26.000	4	13.625	3	14.813	52.80	−64.90
3139	36.000	44.000	18.000	3	12.375	4	12.542	52.80	−69.80
3939	44.000	44.000	22.000	3	16.375	4	12.542	52.80	−62.82
4139	48.000	44.000	24.000	3	18.375	4	12.542	52.80	−58.82
53.125 x 45	52.125	44.000	26.000	4	13.625	4	12.542	52.80	−53.86
3141	36.000	48.000	18.000	3	12.375	4	13.875	52.80	−67.18
3941	44.000	48.000	22.000	3	16.375	4	13.875	52.80	−60.37
4141	48.000	48.000	24.000	3	18.375	4	13.875	52.80	−53.64
53.125 x 49	52.125	48.000	26.000	4	13.625	4	13.875	49.13	−49.13
4151	48	60.000	24.000	3	18.375	4	17.875	42.45	−42.45
53.125 x 61	52.125	60.000	26.000	4	13.625	4	17.875	38.88	−38.88

PA16A.02 Horizontal Roller Window

1/8" Annealed or Tempered Glazing w/ 2" Sill Riser

Note: The installation of this unit requires a hurricane protective system

Call Size	Buck Width	Buck Height	Max Vent Width	Head & Sill Fasteners	Typical Spacing	Jamb Fasteners	Typical Spacing	Results	
								Pressure (+)	Pressure (−)
2121	24.000	24.000	12.000	2	12.750	2	17.626	52.80	−120.77
3121	36.000	24.000	18.000	3	12.375	2	17.626	52.80	−100.64
3921	44.000	24.000	22.000	3	16.375	2	17.626	52.80	−93.32
4121	48.000	24.000	24.000	3	18.375	2	17.626	52.80	−90.58
5121	60.000	24.000	30.000	4	16.250	2	17.626	52.80	−84.54
53.125 x 25	52.125	24.000	26.000	4	13.625	2	17.626	52.80	−88.19
3131	36.000	36.000	18.000	3	12.375	3	14.813	52.80	−80.51
3931	44.000	36.000	22.000	3	16.375	3	14.813	52.80	−73.19
4131	48.000	36.000	24.000	3	18.375	3	14.813	52.80	−70.45
5131	60.000	36.000	30.000	4	16.250	3	14.813	52.80	−56.34
53.125 x 37	52.125	36.000	26.000	4	13.625	3	14.813	52.80	−65.40
3139	36.000	44.000	18.000	3	12.375	4	12.542	52.80	−70.62
3939	44.000	44.000	22.000	3	16.375	4	12.542	52.80	−63.52

PA16A.03 Horizontal Roller Window

1/8"(DSB) Annealed Glazing at Fixed Lite and 3/32"(SSB) Glazing at Vents
w/ 2" Sill Riser

Note: The installation of this unit requires a hurricane protective system

Call Size	Buck Width	Buck Height	Max Vent Width	Head & Sill Fasteners	Typical Spacing	Jamb Fasteners	Typical Spacing	Results	
								Pressure (+)	Pressure (−)
2121	24.000	24.000	12.000	2	12.750	2	17.626	52.80	−122.77
3121	36.000	24.000	18.000	3	12.375	2	17.626	52.80	−102.31
4121	48.000	24.000	24.000	3	18.375	2	17.626	52.80	−80.08
53.125 x 25	52.125	24.000	26.000	4	13.625	2	17.626	52.80	−73.33
2131	24.000	36.000	12.000	2	12.750	3	14.813	52.80	−97.35
3131	36.000	36.000	18.000	3	12.375	3	14.813	52.80	−70.09
4131	48.000	36.000	24.000	3	18.375	3	14.813	52.80	−51.32
53.125 x 37	52.125	36.000	26.000	4	13.625	3	14.813	46.99	−46.99

PA16A.04 Horizontal Roller Window

3/32" Annealed Glazing w/ 2" Sill Riser

Note: The installation of this unit requires a hurricane protective system

Call Size	Buck Width	Buck Height	Max Vent Width	Head & Sill Fasteners	Typical Spacing	Jamb Fasteners	Typical Spacing	Results	
								Pressure (+)	Pressure (−)
2121	24.000	24.000	12.000	2	12.750	2	17.626	52.80	−70.00
3121	36.000	24.000	16.000	3	12.375	2	17.626	52.80	−68.06
3921	44.000	24.000	22.000	3	16.375	2	17.626	52.80	−63.11
4121	48.000	24.000	24.000	3	18.375	2	17.626	52.80	−64.25
3131	36.000	36.000	16.000	3	12.375	3	14.813	52.80	−54.44
3931	44.000	36.000	22.000	3	16.375	3	14.813	49.49	−49.49
4131	48.000	36.000	24.000	3	18.375	3	14.813	47.64	−47.64
3139	36.000	44.000	16.000	3	12.375	4	12.542	49.49	−49.49
3939	44.000	44.000	22.000	3	16.375	4	12.542	44.55	−44.55
4139	48.000	44.000	24.000	3	18.375	4	12.542	40.74	−40.74
3141	36.000	48.000	16.000	3	12.375	4	13.875	47.64	−47.64
3941	44.000	48.000	22.000	3	16.375	4	13.875	40.85	−40.85
4141	49.000	48.000	24.000	3	18.375	4	13.875	37.21	−37.21

ROBT. E. FISHER
WM. M. MEYERS, P.E
Consulting Engineers
9301 N.E. 6th Ave. C-300
Miami Shores, FL 33138
305) 758-3117 557-4006 Fax 362-6282

APPROVED AS COMPLYING WITH THE
SOUTH FLORIDA BUILDING CODE
DATE February 4, 2000
BY Manuel Diaz
PRODUCT CONTROL DIVISION
BUILDING CODE COMPLIANCE OFFICE
ACCEPTANCE NO. 99-1227.05

01/17/00

Revisions: ----	Binnings Pan American				P.O. Box 630038 2805 N.E. 185th Street Miami, Florida 33163 (305)931-2350
	Draw Class: CHART	Part Class: ---	Prod Category: H.S.	Series/Model: PA-16	Item: COMP.ANYL. / Sheet: 4 of 10
Material: ----	SPECIFIC CONDITIONS PA-16 XO/OX (2" RISER)				
Drawn By: PJS / Date: 12/26/96					
Revised By: --- / Date: ---	Part Number: PA-16PCS4	Drawing Number: PA-16PCS4	Revision Level: ---		

PA16B.01 Horizontal Roller Window

3/16" Annealed or Tempered Glazing at Fixed Lite and
1/8' (DSB) Annealed or Tempered Glazing at Vents w/ 1 5/16' Sill Riser

Note: The installation of this unit requires a hurricane protective system

Call Size	Buck Width	Buck Height	Max Vent Width	Head & Sill Fasteners	Typical Spacing	Jamb Fasteners	Typical Spacing	Results Pressure (+)	Results Pressure (−)
2121	24.000	24.000	12.438	2	12.750	2	17.626	40.00	−115.16
3121	36.000	24.000	18.438	3	12.375	2	17.626	40.00	−95.97
3921	44.000	24.000	22.438	3	16.375	2	17.626	40.00	−86.37
4121	48.000	24.000	24.438	3	18.375	2	17.626	40.00	−84.09
53.125x25	52.125	24.000	26.500	4	13.625	2	17.626	40.00	−95.97
3131	36.000	36.000	18.438	3	12.375	3	14.813	40.00	−76.77
3931	44.000	36.000	22.438	3	16.375	3	14.813	40.00	−67.18
4131	48.000	36.000	24.438	3	18.375	3	14.813	40.00	−64.90
53.125x37	52.125	36.000	26.500	4	13.625	3	14.813	40.00	−69.80
3139	36.000	44.000	18.438	3	12.375	4	12.542	40.00	−62.82
3939	44.000	44.000	22.438	3	16.375	4	12.542	40.00	−58.82
4139	48.000	44.000	24.438	3	18.375	4	12.542	40.00	−53.86
53.125x45	52.125	44.000	26.500	4	13.625	4	12.542	40.00	−67.18
3141	36.000	48.000	18.438	3	12.750	4	13.875	40.00	−53.64
3941	44.000	48.000	22.438	3	16.375	4	13.875	40.00	−49.13
4141	48.000	48.000	24.438	4	18.375	4	13.875	40.00	−53.06
53.125x49	52.125	48.000	26.500	4	13.625	4	13.875	40.00	−48.33
4151	48.000	60.000	24.438	3	18.375	4	17.875	40.00	−44.26
53.125x61	52.125	60.000	26.500	4	13.625	4	17.875	33.98	−33.98

PA16B.02 Horizontal Roller Window

1/8" Annealed or Tempered Glazing w/ 1 5/16" Sill Riser

Note: The installation of this unit requires a hurricane protective system

Call Size	Buck Width	Buck Height	Max Vent Width	Head & Sill Fasteners	Typical Spacing	Jamb Fasteners	Typical Spacing	Results Pressure (+)	Results Pressure (−)
2121	24.000	24.000	12.000	2	12.750	2	17.626	40.00	−120.77
3121	36.000	24.000	18.000	3	12.375	2	17.626	40.00	−100.64
3921	44.000	24.000	22.000	3	16.375	2	17.626	40.00	−93.32
4121	48.000	24.000	24.000	3	18.375	2	17.626	40.00	−90.58
5121	60.000	24.000	30.000	4	16.250	2	17.626	40.00	−84.54
53.125x25	52.125	24.000	26.000	4	13.625	2	17.626	40.00	−88.19
3131	36.000	36.000	18.000	3	12.375	3	14.813	40.00	−80.51
3931	44.000	36.000	22.000	3	16.375	3	14.813	40.00	−73.19
4131	48.000	36.000	24.000	3	18.375	3	14.813	40.00	−70.45
5131	60.000	36.000	30.000	4	16.250	3	14.813	40.00	−56.34
53.125x37	52.125	36.000	26.000	4	13.625	3	14.813	40.00	−65.40
3139	36.000	44.000	18.000	3	12.375	4	12.542	40.00	−70.62
3939	44.000	44.000	22.000	3	16.375	4	12.542	40.00	−63.52
4139	48.000	44.000	24.000	3	18.375	4	12.542	40.00	−57.86
5139	60.000	44.000	30.000	4	16.250	4	12.542	40.00	−45.65
53.125x45	52.125	44.000	26.000	4	13.625	4	12.542	40.00	−52.98
3141	36.000	48.000	18.000	3	12.375	4	13.875	40.00	−70.45
3941	44.000	48.000	22.000	3	16.375	4	13.875	40.00	−58.02
4141	48.000	48.000	24.000	3	18.375	4	13.875	40.00	−52.84
5141	60.000	48.000	30.000	4	16.250	4	13.875	40.00	−41.70
53.125x49	52.125	48.000	26.000	4	13.625	4	13.875	40.00	−48.39

PA16B.03 Horizontal Roller Window

1/8"(DSB) Annealed Glazing at Fixed Lite and 3/32"(SSB)
Glazing at Vents w/ 1 5/16" Sill

Note: The installation of this unit requires a hurricane protective system

Call Size	Buck Width	Buck Height	Max Vent Width	Head & Sill Fasteners	Typical Spacing	Jamb Fasteners	Typical Spacing	Results Pressure (+)	Results Pressure (−)
2121	24.000	24.000	12.000	2	12.750	2	17.626	40.0	−122.77
3121	36.000	24.000	18.000	3	12.375	2	17.626	40.0	−102.31
4121	48.000	24.000	24.000	3	18.375	2	17.626	40.0	−80.08
53.125 x 25	52.125	24.000	26.000	4	13.625	2	17.626	40.0	−73.33
2131	24.000	36.000	12.000	2	12.750	3	14.813	40.0	−97.35
3131	36.000	36.000	18.000	3	12.375	3	14.813	40.0	−70.09
4131	48.000	36.000	24.000	3	18.375	3	14.813	40.0	−51.32
53.125 x 37	52.125	36.000	26.000	4	13.625	3	14.813	40.0	−46.99

PA16B.04 Horizontal Roller Window

3/32" Annealed Glazing w/ 1 5/16" Sill

Note: The installation of this unit requires a hurricane protective system

Call Size	Buck Width	Buck Height	Panel Widths	Head & Sill Fasteners	Typical Spacing	Jamb Fasteners	Typical Spacing	Results Pressure (+)	Results Pressure (−)
2121	24.000	24.000	12.000	2	12.750	2	17.626	40.00	−70.00
3121	36.000	24.000	16.000	3	12.375	2	17.626	40.00	−68.10
3921	44.000	24.000	22.000	3	16.375	2	17.626	40.00	−63.10
4121	48.000	24.000	24.000	3	18.375	2	17.626	40.00	−61.30
3131	37.000	36.000	16.000	3	12.375	3	14.813	40.00	−54.40
3931	44.000	36.000	22.000	3	16.375	3	14.813	40.00	−49.50
4131	48.000	36.000	24.000	3	18.375	3	14.813	40.00	−47.60
3139	36.000	44.000	16.000	3	12.375	4	12.542	40.00	−49.50
3939	44.000	44.000	22.000	3	16.375	4	12.542	40.00	−44.50
4139	48.000	44.000	24.000	3	18.375	4	12.542	40.00	−40.70
3141	36.000	48.000	16.000	3	12.375	4	13.875	40.00	−47.60
3941	44.000	48.000	22.000	3	16.375	4	13.875	40.00	−40.80
4141	49.000	48.000	24.000	3	18.375	4	13.875	40.00	−37.20

ROBT. E. FISHER
WM. M. MEYERS, P.E.
Consulting Engineers
9301 N.E. 6th Ave. C-300
Miami Shores, FL 33138
(305) 758-3117 557-4006 Fax 362-6282

APPROVED AS COMPLYING WITH THE
SOUTH FLORIDA BUILDING CODE
DATE February 14, 2000
BY Manuel Lopez
PRODUCT CONTROL DIVISION
BUILDING CODE COMPLIANCE OFFICE
ACCEPTANCE NO. 99-1227.05

01/18/00

Revisions: ----

Material: ----

Drawn By: PJS | Date: 12/26/96

Revised By: --- | Date: ---

Binnings Pan American PA
P.O. Box 630038
2805 N.E. 185th Street
Miami, Florida 33163
(305)931-2350

Draw Class:	Part Class:	Prod Category:	Series/Model:	Item:	Sheet:
CHART	---	H.S.	PA-16	COMP.ANYL.	5 of 10

SPECIFIC CONDITIONS
PA-16 XO/OX (1 5/16" RISER)

Part Number: PA-16PCS5 | Drawing Number: PA-16PCS5 | Revision Level: ---

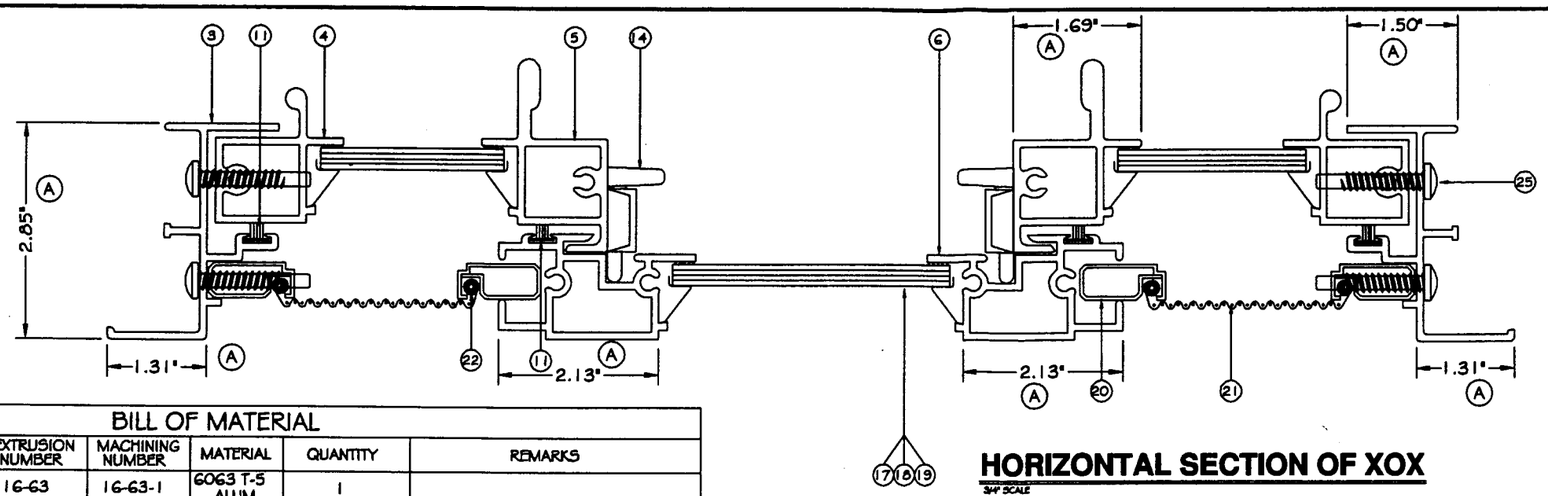

HORIZONTAL SECTION OF XOX

3/4" SCALE

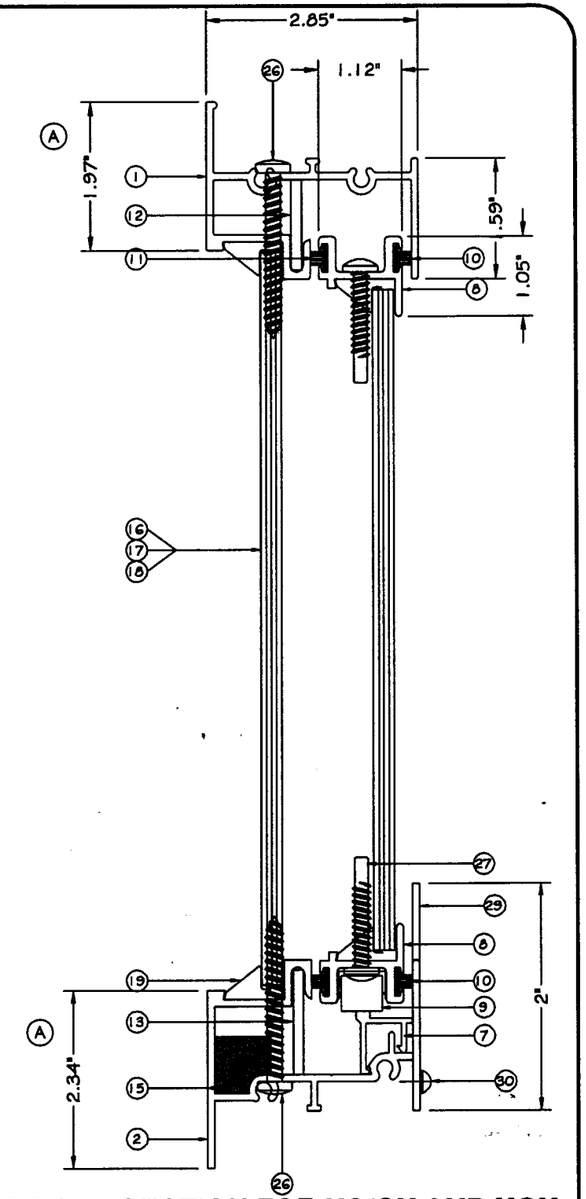

VERTICAL SECTION FOR XO/OX AND XOX

3/4" SCALE

BILL OF MATERIAL

PART NO.	ITEM	EXTRUSION NUMBER	MACHINING NUMBER	MATERIAL	QUANTITY	REMARKS
1	FRAME HEAD	16-63	16-63-1	6063 T-5 ALUM.	1	
2	FRAME SILL	16-62	16-62-1	6063 T-5 ALUM.	1	
3	FRAME JAMB	16-20	16-20-1	6063 T-5 ALUM.	2	
4	VENT SIDE RAIL	16-39A	16-39-1	6063 T-5 ALUM.	2	
5	VENT MT'G RAIL	16-59	16-59-1	6063 T-5 ALUM.	2	
6	FRAME MT'G RAIL	16-60	16-60-1	6063 T-5 ALUM.	2	
7	TRACK INSERT	16-61	16-61-1	6063 T-5 ALUM.	1	
8	VENT HEAD & SILL	16-05	16-05-1	6063 T-5 ALUM.	4	
9	ROLLER ASSEMBLY	16-6004			4	
10	POLY PILE WSTP	8-2004		PILE	4	USED IN VENT TOP AND BOTTOM RAIL INTERIOR LEG ONLY
11	POLY PILE WSTP WITH FIN	8-2010		FIN SEAL	8	USED IN VENT TOP AND BOTTOM RAIL EXT. LEG, IN JAMB AND IN FRAME MT'G RAIL
12	HEAD INSERT	16-6003		6063 T-5 ALUM.	2	
13	SILL INSERT	16-6000		6063 T-5 ALUM.	2	
14	SWEEP LOCK	16-6008		ZINK	4	
15	WEEP BAFFLE	4802110		OPEN CELL FOAM TAPE	AS REQUIRED	INSTALLED AT WEEP HOLES
16	3/16" GLAZING	4710103			AS REQUIRED	USED IN FIXED LITE OF 84 1/8" X 49" XOX
17	DSB GLAZING	4710102			AS REQUIRED	USED IN 61" X 49" OX AND IN THE FIXED LITE OF 108" X 37" XOX.
18	SSB GLAZING	4710101			AS REQUIRED	USED IN 108" X 37" XOX, 49" X 49" XO. USED ONLY IN VENTS OF 84 1/8" X 49" XOX AND 108" X 37" XOX
19	GLAZING BEAD	8-059		ALUM.	12	
20	SCREEN FRAME	19-011		ALUM.	8	
21	SCREEN MESH	1816		FIBERGLASS	AS REQUIRED	
22	SCREEN SPLINE	4802004		VINYL	AS REQUIRED	
23	SCREEN CORNER	3-3049		PLASTIC	4	
24	SCREEN TENSION SPRING	18-4001B		.047 GALV. HD.DR.WIRE	4	
25	FRAME ASSEMBLY SCREW	4801014		STEEL	8	#8 X 1" PP SMS
26	MEETING RAIL ASSEMBLY SCREW	4801070		STEEL	8	#8 X 1 1/2" PHPH
27	VENT ASSEMBLY SCREW	4801070		STEEL	8	#8 X 1" PP SMS
28	SCREEN FINGER PULL	14-5003A		NYLON	4	
29	SILL RISER	—		ALUM.	1	2" X .062" THICK (TYPE "A" ONLY)
30	SILL RISER SCREW	—		STEEL	18" C_L	#6 X 3/8" SELF TAPPING

APPROVED AS COMPLYING WITH THE
SOUTH FLORIDA BUILDING CODE
DATE February 11, 2000
BY Manuel Perez
PRODUCT CONTROL DIVISION
BUILDING CODE COMPLIANCE OFFICE
ACCEPTANCE NO. 99-1227.05

ROBT. E. FISHER
WM. M. MEYERS, P.E.
Consulting Engineers
9301 N.E. 6th Ave. C-300
Miami Shores, FL 33138
(305) 758-3117 557-4006 Fax 362-6282

Wm M Meyers
08/12/00

Binnings Pan American PA
P.O. Box 630038
2805 N.E. 185th Street
Miami, Florida 33163
(305)931-2350

Revisions: A - ADDED DIMENSIONS	Draw Class: ASSEM.	Part Class: ——	Prod Category: H.S.	Series/Model: PA-16	Item:
Material:					
Drawn By: PJS	Date: 6-5-95				
Revised By: SJR	Date: 1/15/00				

Sheet: 6 of 10

PA-16 XOX ASSEMBLY DRAWING

Part Number:

Drawing Number: PA-16PCS6A

Revision Level: A

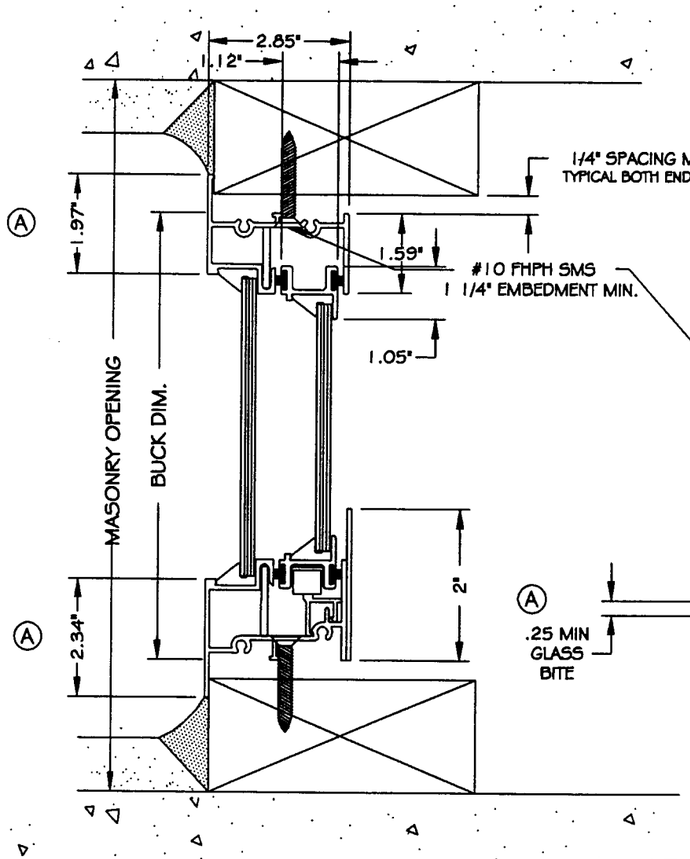

1 VERTICAL SECT. HORIZ. SLIDER
HALF SCALE

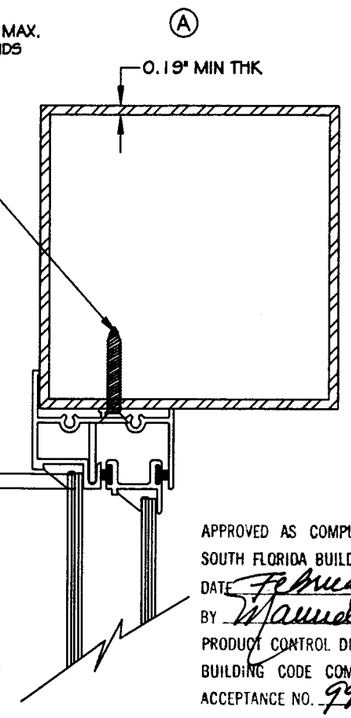

1A PA-16 STEEL RUNNER INSTALLATION
HALF SCALE

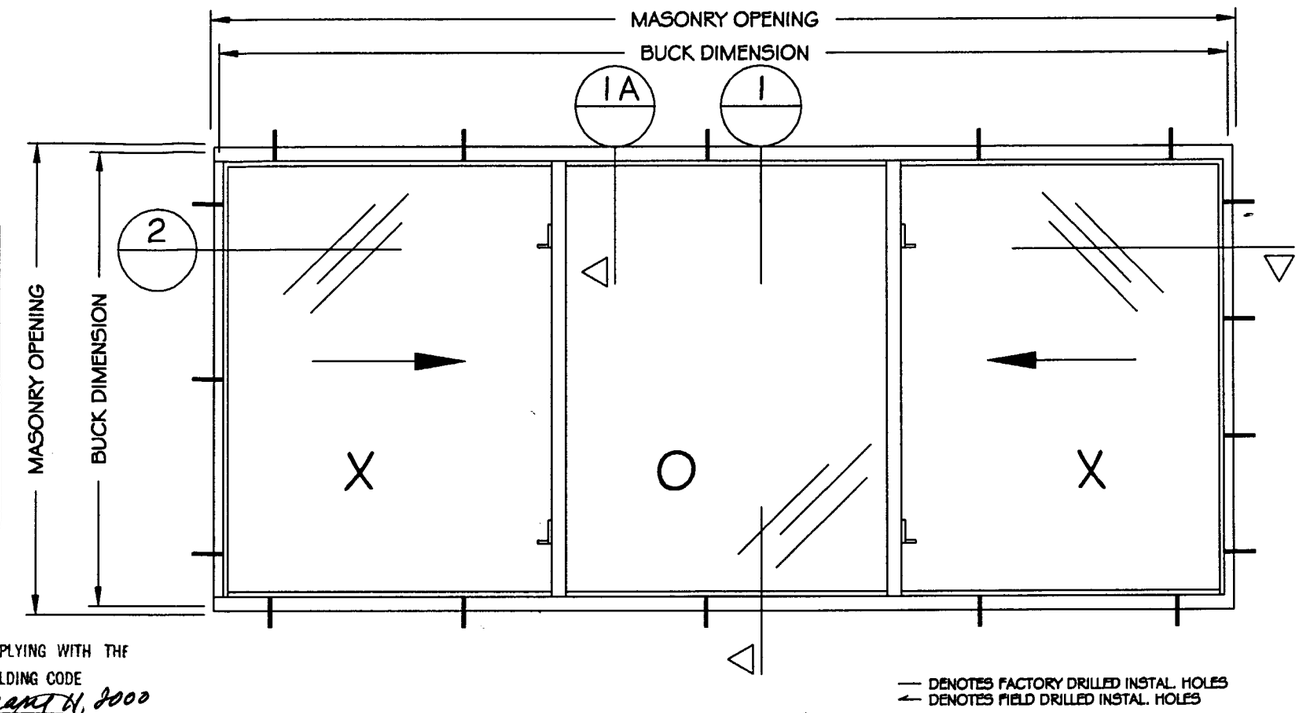

APPROVED AS COMPLYING WITH THE
SOUTH FLORIDA BUILDING CODE
DATE February 21, 2000
BY Manuel Diaz
PRODUCT CONTROL DIVISION
BUILDING CODE COMPLIANCE OFFICE
ACCEPTANCE NO. 99-1227.05

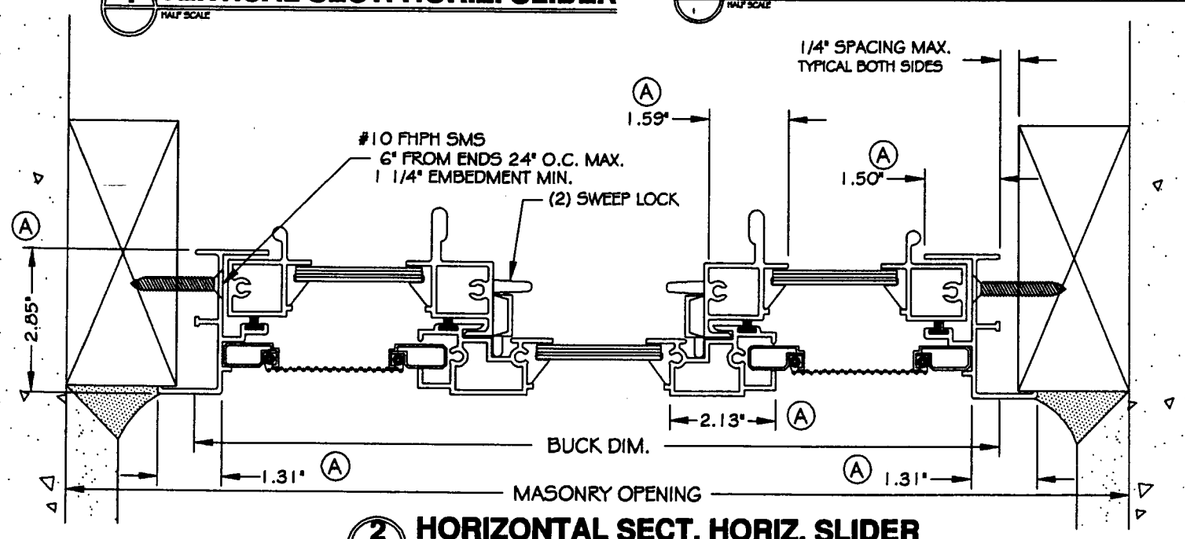

2 HORIZONTAL SECT. HORIZ. SLIDER
HALF SCALE

GENERAL NOTES:

1. Horizontal Slider has been designed in accordance with the Dade County, 1994 edition of the South Florida Building Code. Wind speed considered is 110 mph, importance factor is 1.05, exposure factor is "C" and the mean roof hieght of the building hieght is less than 60'.
2. Horizontal Sliders installed in Dade and Broward County must have hurricane protective system, such as storm panels.
3. All aluminum extrusions shall be 6063-T5 unless noted otherwise.
4. Glazing material to be 3/32", 1/8" or 3/16" annealed or tempered as required.
5. Fasteners will be carbon steel with zinc coatings, or Tap Cons. Minimum embedment must be 1 1/4" regardless of substrate.
6. Anchoring shall be as indicated on page 8.
7. 1" x P.T., 2" x P.T. wood buck (shown) and steel runner responsibility of others. Buck must withstand loads imposed by wind loads and glazing systems.
8. Lab number: Test Size Design pressure: Water test pressure:

16752	109 1/8" x 61"	+35.0/-35.0	6.0 (1 5/8" sill)/7.92 (2" sill)
16673	109" x 37"	+53.33/-53.33	6.0 (1 5/8" sill)/7.92 (2" sill)

Binnings Pan American PA
P.O. Box 630038
2805 N.E. 185th Street
Miami, Florida 33163
(305)931-2350

Revisions: A - ADDED DIMENSIONS	Draw Class: SHOP	Part Class: —	Prod Category: H.S.	Series/Model: PA-16	Item:	Sheet: 7 of 10
Material:	INSTALLATION DRAWING FOR PA-16 XOX				
Drawn By: PJS / Date: 6/6/96					
Revised By: SJR / Date: 1/15/00	Part Number:	Drawing Number: PA-16PCS7A			Revision Level: A

ROBT. E. FISHER
WM. M. MEYERS, P.E.
Consulting Engineers
9301 N.E. 6th Ave. C-300
Miami Shores, FL 33138
(305) 758-3117 557-4006 Fax 362-6282

01/13/00

Drawing Name: Pa16pcs7.dwg

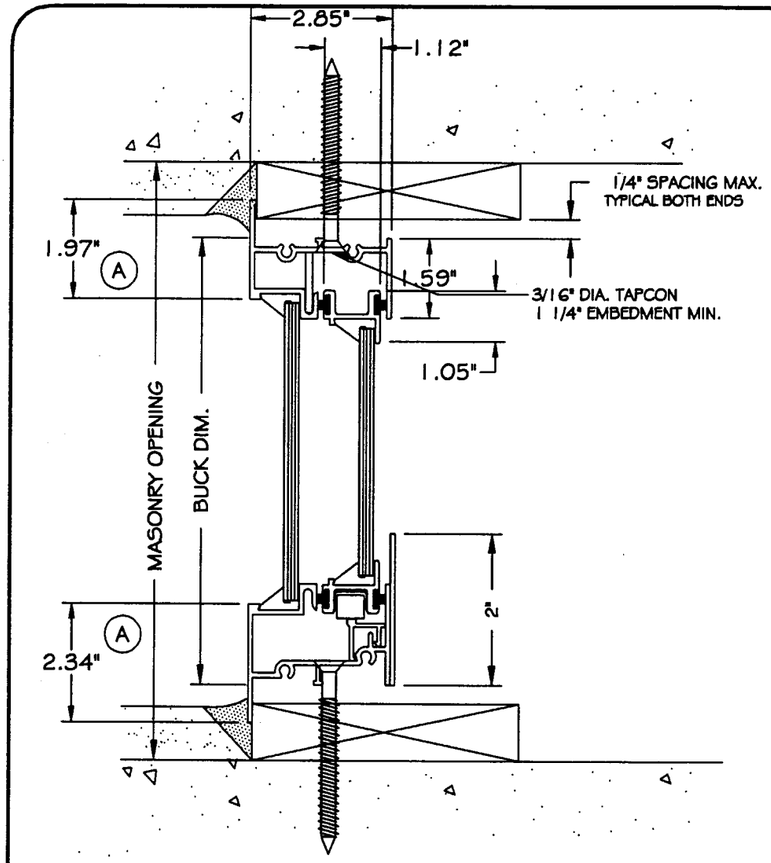

1 VERTICAL SECT. HORIZ. SLIDER
HALF SCALE

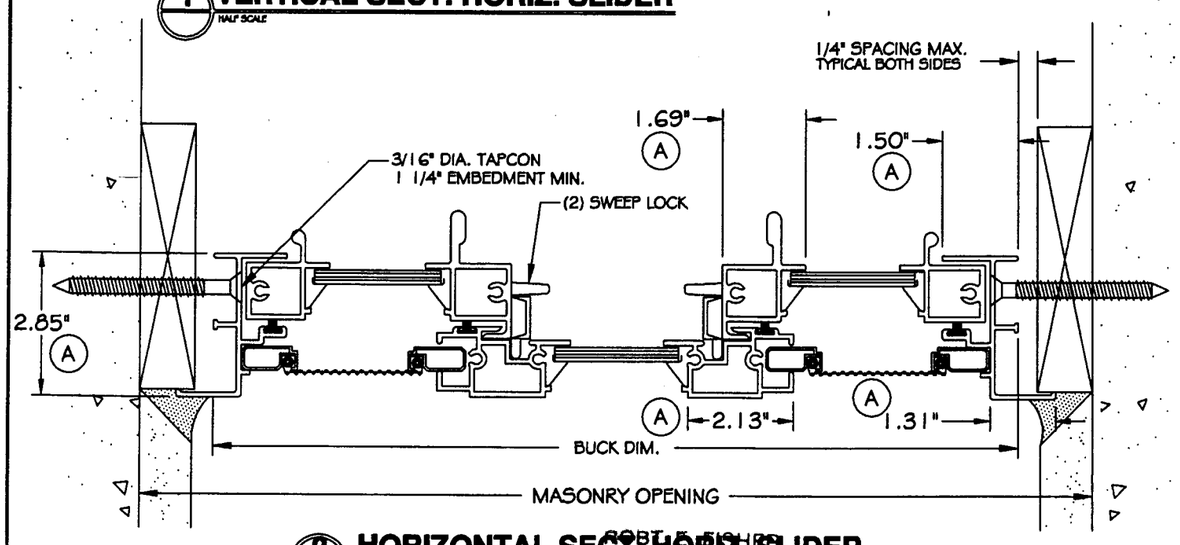

2 HORIZONTAL SECT. HORIZ. SLIDER
HALF SCALE

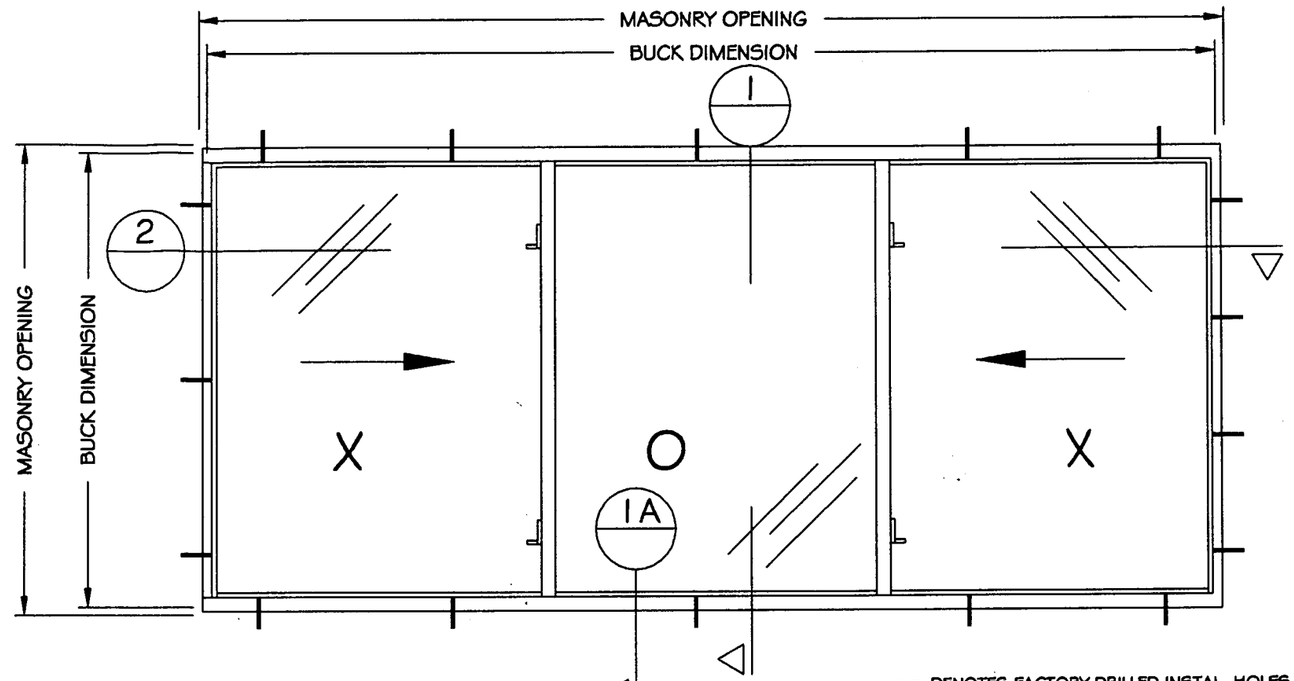

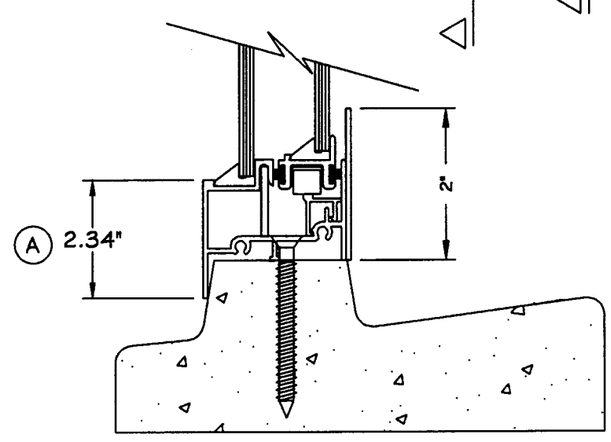

1A PA-16 PRECAST SILL INSTALLATION
HALF SCALE

NOTE: General notes on sheet 7 apply

APPROVED AS COMPLYING WITH THE SOUTH FLORIDA BUILDING CODE
DATE: February 11, 2000
BY: Manuel Perez
PRODUCT CONTROL DIVISION
BUILDING CODE COMPLIANCE OFFICE
ACCEPTANCE NO. 99-1227.05

ROBT. E. FISHER
WM. M. MEYERS, P.E.
Consulting Engineers
9301 N.E. 6th Ave. C-300
Miami Shores, FL 33138
(305) 758-3117 557-4006 Fax 362-6282

Wm M Meyers 6/18/00

Binnings Pan American
P.O. Box 630038
2805 N.E. 185th Street
Miami, Florida 33163
(305)931-2350

Revisions:	Draw Class:	Part Class:	Prod Category:	Series/Model:	Item:	Sheet:
A - ADDED DIMENSIONS	SHOP	—	H.S.	PA-16		8 of 10

Material:

Drawn By:	Date:
PJS	6/6/96
Revised By: SJR	Date: 1/15/00

INSTALLATION DRAWING FOR PA-16 XOX

Part Number:	Drawing Number:	Revision Level:
	PA-16PCS8A	A

PA16A.01 Horizontal Roller Window

3/16" Annealed or Tempered Glazing at Fixed Lite
and 1/8" (DSB) Annealed or Tempered Glazing at Vents w/ 2" Sill Riser

Note: The installation of this unit requires a hurricane protective system

Call Size	Buck Width	Buck Height	Max Vent Width	Head & Sil Fasteners	Typical Spacing	Jamb Fasteners	Typical Spacing	Results Pressure (+)	Results Pressure (−)
6121	72.000	24.000	18.000	5	15.188	2	17.626	52.80	−76.77
7121	84.000	24.000	22.000	5	18.188	2	17.626	52.80	−74.03
8121	96.000	24.000	24.000	6	16.950	2	17.626	52.80	−71.98
9121	108.000	24.000	26.000	7	16.125	2	17.626	52.80	−70.38
74.125x25	73.125	24.000	24.000	5	15.469	2	17.626	52.80	−76.48
106.375x25	105.375	24.000	26.000	7	15.688	2	17.626	52.80	−70.70
6131	72.000	36.000	18.000	5	15.188	3	14.813	52.80	−57.58
7131	84.000	36.000	22.000	5	18.188	3	14.813	52.80	−54.84
8131	96.000	36.000	24.000	6	16.950	3	14.813	52.78	−52.78
9131	108.000	36.000	26.000	7	16.125	3	14.813	51.18	−51.18
74.125x37	73.125	36.000	24.000	5	15.469	3	14.813	52.80	−57.29
106.375x37	105.375	36.000	26.000	7	15.688	3	14.813	51.50	−51.50
6139	72.000	44.000	18.000	5	15.188	4	12.542	50.60	−50.60
7139	84.000	44.000	22.000	5	18.188	4	12.542	47.86	−47.86
8139	96.000	44.000	24.000	6	16.950	4	12.542	45.80	−45.80
9139	108.000	44.000	26.000	7	16.125	4	12.542	44.20	−44.20
74.125x45	73.125	44.000	24.000	5	15.469	4	12.542	50.31	−50.31
106.375x45	105.375	44.000	26.000	7	15.688	4	12.542	44.52	−44.52
6141	72.000	48.000	18.000	5	15.188	4	13.875	47.98	−47.98
7141	84.000	48.000	22.000	5	18.188	4	13.875	45.24	−45.24
8141	96.000	48.000	24.000	6	16.950	4	13.875	43.19	−43.19
9141	108.000	48.000	26.000	7	16.125	4	13.875	41.59	−41.59
74.125x49	73.125	48.000	24.000	5	15.469	4	13.875	47.95	−47.95
106.375x49	105.375	48.000	26.000	7	15.688	4	13.875	41.91	−41.91
6151	72.000	60.000	18.000	5	15.188	4	17.875	45.27	−45.27
7151	84.000	60.000	22.000	5	18.188	4	17.875	40.47	−40.47
8151	96.000	60.000	24.000	6	16.950	4	17.875	37.43	−37.43
9151	108.000	60.000	26.000	7	16.125	4	17.875	33.72	−33.72
74.125x61	73.125	60.000	24.000	5	15.469	4	17.875	38.88	−38.88
106.375x61	105.375	60.000	26.000	7	15.688	4	17.875	35.46	−35.46

PA16A.03 Horizontal Roller Window

1/8"(DSB) Annealed Glazing at Fixed Lite and 3/32"(SSB) Glazing at Vents
w/ 2" Sill Riser

Note: The installation of this unit requires a hurricane protective system

Call Size	Buck Width	Buck Height	Max Vent Width	Head & Sil Fasteners	Typical Spacing	Jamb Fasteners	Typical Spacing	Results Pressure (+)	Results Pressure (−)
6121	72.000	24.000	18.000	5	15.188	2	17.626	40.00	−73.23
7121	84.000	24.000	22.000	5	18.188	2	17.626	40.00	−62.18
8121	96.000	24.000	24.000	6	16.950	2	17.626	40.00	−54.03
9121	108.000	24.000	26.000	7	16.125	2	17.626	40.00	−46.10
74.125x25	73.125	24.000	18.000	5	15.469	2	17.626	40.00	−70.87
106.375x25	105.375	24.000	26.000	7	15.688	2	17.626	40.00	−48.47
6131	72.000	36.000	18.000	5	15.188	3	14.813	40.00	−47.48
7131	84.000	36.000	22.000	5	18.188	3	14.813	40.00	−40.32
8131	96.000	36.000	24.000	6	19.950	3	14.813	35.04	−35.04
9131	108.000	36.000	26.000	7	16.125	3	14.813	29.90	−29.90
74.25x37	73.125	36.000	18.000	5	15.469	3	14.813	40.00	−45.95
106.375x37	105.375	36.000	26.000	7	15.688	3	14.813	31.44	−31.44

APPROVED AS COMPLYING WITH THE
SOUTH FLORIDA BUILDING CODE
DATE February 11, 2000
BY Manuel Perez
PRODUCT CONTROL DIVISION
BUILDING CODE COMPLIANCE OFFICE
ACCEPTANCE NO. 99-1227.05

ROBT. E. FISHER
WM. M. MEYERS, P.E.
Consulting Engineers
9301 N.E. 6th Ave. C-300
Miami Shores, FL 33138
(305) 758-3117 557-4006 Fax 362-6282

Wm M Meyers 01/12/00

Revisions: ----	Binnings Pan American PA	P.O. Box 630038 2805 N.E. 185th Street Miami, Florida 33163 (305)931-2350			
	Draw Class: CHART	Part Class: ---	Prod Category: H.S.	Series/Model: PA-16	Item: COMP.ANYL.	Sheet: 9 of 10
Material: ----	SPECIFIC CONDITIONS PA-16 XOX (2" RISER)				
Drawn By: PJS	Date: 12/26/96				
Revised By: ---	Date: ---	Part Number: PA-16PCS9	Drawing Number: PA-16PCS9	Revision Level: ---	

PA16B.01 Horizontal Roller Window

3/16" Annealed or Tempered Glazing at Fixed Lite and
1/8" (DSB) Annealed or Tempered Glazing at Vents w/ 1 5/16" Sill Riser

Note: The installation of this unit requires a hurricane protective system

Call Size	Buck Width	Buck Height	Max Vent Width	Head & Sill Fasteners	Typical Spacing	Jamb Fasteners	Typical Spacing	Results Pressure (+)	Results Pressure (−)
6121	72.000	24.000	18.438	5	15.188	2	17.626	52.80	−76.77
7121	84.000	24.000	22.438	5	18.188	2	17.626	40.00	−74.03
8121	96.000	24.000	24.438	6	16.950	2	17.626	40.00	−71.98
9121	108.000	24.000	26.500	7	16.125	2	17.626	40.00	−70.38
74.125x25	73.125	24.000	18.438	5	15.469	2	17.626	40.00	−76.48
106.375x25	105.375	24.000	26.500	7	15.688	2	17.626	40.00	−70.70
6131	72.000	36.000	18.438	5	15.188	3	14.813	40.00	−57.58
7131	84.000	36.000	22.438	5	18.188	3	14.813	40.00	−54.84
8131	96.000	36.000	24.438	6	16.950	3	14.813	40.00	−52.78
9131	108.000	36.000	26.500	7	16.125	3	14.813	40.00	−51.18
74.125x37	73.125	36.000	18.438	5	15.469	3	14.813	40.00	−57.55
106.375x37	105.375	36.000	26.500	7	15.688	3	14.813	40.00	−51.50
6139	72.000	44.000	18.438	5	15.188	4	12.542	40.00	−50.60
7139	84.000	44.000	22.438	5	18.188	4	12.542	40.00	−47.86
8139	96.000	44.000	24.438	6	16.950	4	12.542	40.00	−45.80
9139	108.000	44.000	26.500	7	16.125	4	12.542	40.00	−44.20
74.125x45	73.125	44.000	18.438	5	15.469	4	12.542	40.00	−50.31
106.375x45	105.375	44.000	26.500	7	15.688	4	12.542	40.00	−44.52
6141	72.000	48.000	18.438	5	15.188	4	13.875	40.00	−47.98
7141	84.000	48.000	22.438	5	18.188	4	13.875	40.00	−45.24
8141	96.000	48.000	24.438	6	16.950	4	13.875	40.00	−43.19
9141	108.000	48.000	26.500	7	16.125	4	13.875	40.00	−41.59
74.125x49	73.125	48.000	18.438	5	15.469	4	13.875	40.00	−47.95
106.375x49	105.375	48.000	26.500	7	15.688	4	13.875	40.00	−41.91
6151	72.000	60.000	18.438	5	15.188	4	17.875	40.00	−45.27
7151	84.000	60.000	22.438	5	18.188	4	17.875	39.79	−39.79
8151	96.000	60.000	24.438	6	16.950	4	17.875	25.52	−25.52
9151	108.000	60.000	26.500	7	16.125	4	17.875	24.01	−24.01
74.125x61	73.125	60.000	18.438	5	15.469	4	17.875	26.21	−26.21
106.375x61	105.375	60.000	26.500	7	15.688	4	17.875	24.21	−24.21

PA16B.03 Horizontal Roller Window

1/8"(DSB) Annealed Glazing at Fixed Lite and 3/32"(SSB) Glazing at Vents
w/ 1 5/16" Sill

Note: The installation of this unit requires a hurricane protective system

Call Size	Buck Width	Buck Height	Panel Widths	Head & Sill Fasteners	Typical Spacing	Jamb Fasteners	Typical Spacing	Results Pressure (+)	Results Pressure (−)
6121	72.000	24.000	18.000	5	15.188	2	17.626	52.80	−73.23
7121	84.000	24.000	22.000	5	18.188	2	17.626	52.80	−62.18
8121	96.000	24.000	24.000	6	16.950	2	17.626	52.80	−54.03
9121	108.000	24.000	26.000	7	16.125	2	17.626	46.10	−46.10
74.125x25	73.125	24.000	18.000	5	15.469	2	17.626	52.80	−70.87
106.375x25	105.375	24.000	26.000	7	15.688	2	17.626	48.47	−48.47
6131	72.000	36.000	18.000	5	15.188	3	14.813	47.48	−47.48
7131	84.000	36.000	22.000	5	18.188	3	14.813	40.32	−40.32
8131	96.000	36.000	24.000	6	16.950	3	14.813	35.04	−35.04
9131	108.000	36.000	26.000	7	16.125	3	14.813	29.90	−29.90
74.25x37	73.125	36.000	18.000	5	15.469	3	14.813	45.95	−45.95
106.375x37	105.375	36.000	26.000	7	15.688	3	14.813	31.44	−31.44

APPROVED AS COMPLYING WITH THE
SOUTH FLORIDA BUILDING CODE
DATE February 11, 2000
BY Manuel Perez
PRODUCT CONTROL DIVISION
BUILDING CODE COMPLIANCE OFFICE
ACCEPTANCE NO. 99-1227.05

ROBT. E. FISHER
WM. M. MEYERS, P.E.
Consulting Engineers
9301 N.E. 6th Ave. C-300
Miami Shores, FL 33138
(305) 758-3117 557-4006 Fax 362-6282

01/12/00

Revisions: ----	Binnings Pan American PA	P.O. Box 630038, 2805 N.E. 185th Street, Miami, Florida 33163, (305)931-2350			
	Draw Class: CHART	Part Class: ---	Prod Category: H.S.	Series/Model: PA-16	Item: COMP.ANYL.	Sheet: 10 of 10
Material: ----	SPECIFIC CONDITIONS PA-16 XOX (1 5/16" RISER)				
Drawn By: PJS	Date: 12/26/96				
Revised By: ---	Date: ---	Part Number: PA-16PCS10	Drawing Number: PA-16PCS10	Revision Level: ---	