MIAMI-DADE

MIAMI-DADE COUNTY, FLORIDA
METRO-DADE FLAGLER BUILDING

BUILDING CODE COMPLIANCE OFFICE
METRO-DADE FLAGLER BUILDING
140 WEST FLAGLER STREET, SUITE 1603
MIAMI, FLORIDA 33130-1563
(305) 375-2901 FAX (305) 375-2908

CONTRACTOR LICENSING SECTION
(305) 375-2527 FAX (305) 375-2558

CONTRACTOR ENFORCEMENT SECTION
(305) 375-2966 FAX (305) 375-2908

PRODUCT CONTROL DIVISION
(305) 375-2902 FAX (305) 372-6339

PRODUCT CONTROL NOTICE OF ACCEPTANCE

American Warming and Ventilating (AWV)
405 Fentress Boulevard
Daytona Beach FL 32114

Your application for Product Approval of:
4" Louver System Model No. LE-22
under Chapter 8 of the Code of Miami-Dade County governing the use of Alternate Materials and Types of Construction, and completely described herein, has been recommended for acceptance by the Miami-Dade County Building Code Compliance Office (BCCO) under the conditions specified herein.

This approval shall not be valid after the expiration date stated below. BCCO reserves the right to secure this product or material at anytime from a jobsite or manufacturer's plant for quality control testing.
If this product or material fails to perform in the approved manner, BCCO may revoke, modify, or suspend the use of such product or material immediately. BCCO reserves the right to revoke this approval, if it is determined BCCO that this product or material fails to meet the requirements of the South Florida Building Code.

The expense of such testing will be incurred by the manufacturer.

Acceptance No.: 99-1227.14

Expires: 07/27/2003

Raul Rodriguez
Chief Product Control Division

THIS IS THE COVERSHEET, SEE ADDITIONAL PAGES FOR SPECIFIC AND GENERAL CONDITIONS

BUILDING CODE & PRODUCT REVIEW COMMITTEE

This application for Product Approval has been reviewed by the BCCO and approved by the Building Code and Product Review Committee to be used in Dade County, Florida under the conditions set forth above.

Francisco J. Quintana, R.A.
Director
Miami-Dade County
Building Code Compliance Office

Approved: 07/27/2000

Internet mail address: postmaster@buildingcodeonline.com **Homepage: http://www.buildingcodeonline.com**

American Warming & Ventilating.

ACCEPTANCE No. : 99-1227.14

APPROVED : JUL 2 7 2000

EXPIRES : JUL 2 7 2003

NOTICE OF ACCEPTANCE: SPECIFIC CONDITIONS

1. SCOPE

1.1 This approve extruded aluminum louvers, as described in Section 2 of this Notice of Acceptance, designed to comply with the South Florida Building Code (SFBC), 1994 Edition for Miami-Dade County. For the locations where the pressure requirements, as determined by SFBC Chapter 23, do not exceed the Design Pressure Rating values indicated in the approved drawings.

2. PRODUCT DESCRIPTION

2.1 The **AWV 4" louver system model LE-22** and its components shall be constructed in strict compliance with the following documents: Drawing No. 31604-4, titled "LE-22 Test Louver Arch. & Non-Arch. Louver" prepared by American Warming & Ventilating, dated 06/16/00, with no revisions. They bear the Miami-Dade County Product Control Approval stamp with the Notice of Acceptance number and approval date by the Miami-Dade County Product Control Division. These documents shall hereinafter be referred to as the approved drawings.

3. LIMITATIONS

3.1 All permanent set components, included but not limited to embedded anchor bolts, metal shields, headers and sills, must be protected against corrosion, contamination and damage at all time.

3.2 This approval applies to single unit and side by side applications as shown on the approved drawings

3.3 Units with dimensions equal to or smaller than those shown in the approved drawings shall qualify under this approval.

3.4 Thermal efficiency of this product is not part of this approval.

4. INSTALLATION

4.1 The louvers shall be installed in strict compliance with the approved drawings.

4.2 The installation of this product **will not** require a hurricane protection system.

4.3 This louver is to be installed in a location where the room behind the louver is designed to drain water penetrating the room, or the room will house water resistant equipment, components, supplies, etc.

5. LABELING

5.1 Each unit shall bear a permanent label with the manufacturer's name or logo, city, state and following statement: "Miami-Dade County Product Control Approved".

6. BUILDING PERMIT REQUIREMENTS

6.1 Application for building permit shall be accompanied by copies of the following:

6.1.1 This Notice of Acceptance.

6.1.2 Duplicate copies of the approved drawings, as identified in Section 2 of this Notice of Acceptance, clearly marked to show the components selected for the proposed installation.

6.1.3 Any other documents required by the Building Official or the South Florida Building Code (SFBC) in order to properly evaluate the installation of this system.

Candido Font PE., Senior Product Control Examiner
Product Control Division

American Warming & Ventilating.

ACCEPTANCE No. : 99-1227.14

APPROVED : JUL 2 7 2000

EXPIRES : JUL 2 7 2003

NOTICE OF ACCEPTANCE: STANDARD CONDITIONS

1. Renewal of this Acceptance (approval) shall be considered after a renewal application has been filed and the original submitted documents, including test-supporting data, engineering documents, are no older than eight (8) years.

2. Any and all approved products shall be permanently labeled with the manufacturer's name, city, state, and the following statement: "Miami-Dade County Product Control Approval", or as specifically stated in the specific conditions of this Acceptance.

3. Renewals of Acceptance will not be considered if:
   a. There has been a change in the South Florida Building Code affecting the evaluation of this product and the product is not in compliance with the code changes.
   b. The product is no longer the same product (identical) as the one originally approved.
   c. If the Acceptance holder has not complied with all the requirements of this acceptance, including the correct installation of the product.
   d. The engineer who originally prepared, signed and sealed the required documentation initially submitted, is no longer practicing the engineering profession.

4. Any revision or change in the materials, use, and/or manufacture of the product or process shall automatically be cause for termination of this Acceptance, unless prior written approval has been requested (through the filing of a revision application with appropriate fee) and granted by this office.

5. Any of the following shall also be grounds for removal of this Acceptance:
   a. Unsatisfactory performance of this product or process.
   b. Misuse of this Acceptance as an endorsement of any product, for sales, advertising or any other purposes.

6. The Notice of Acceptance number preceded by the words Miami-Dade County, Florida, and followed by the expiration date may be displayed in advertising literature. If any portion of the Notice of Acceptance is displayed, then it shall be done in its entirety.

7. A copy of this Acceptance as well as approved drawings and other documents, where it applies, shall be provided to the user by the manufacturer or its distributors and shall be available for inspection at the job site at all time. The engineer need not reseal the copies.

8. Failure to comply with any section of this Acceptance shall be cause for termination and removal of Acceptance.
9. This Notice of Acceptance consists of pages 1, 2 and this last page 3.

Candido Font PE., Senior Product Control Examiner
Product Control Division

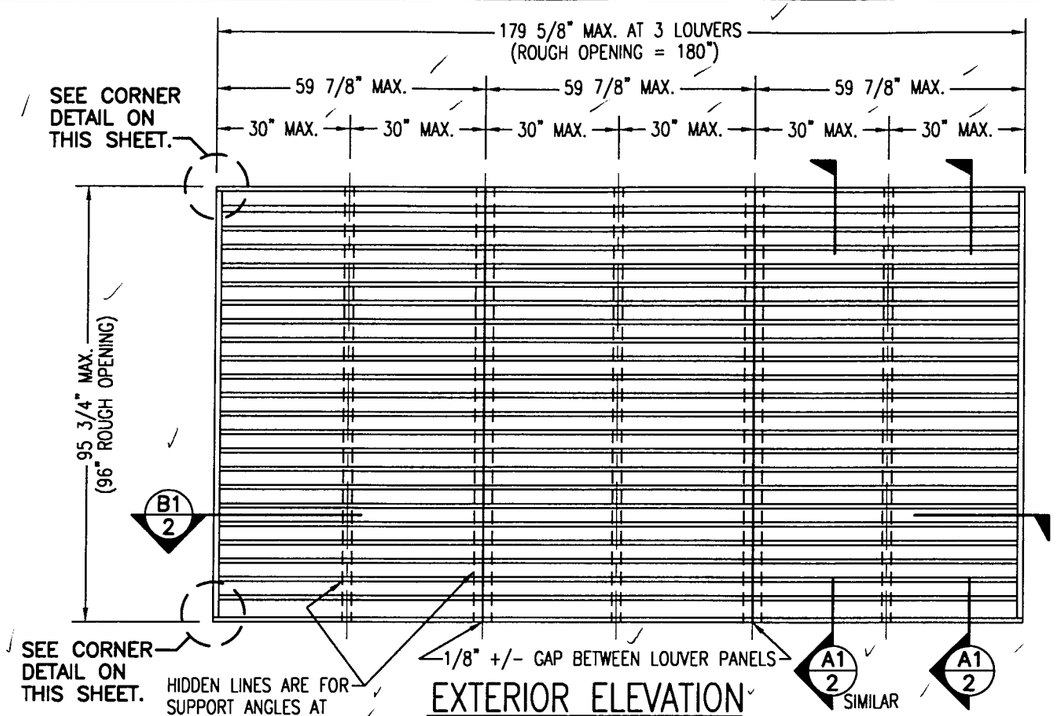

EXTERIOR ELEVATION
ARCHITECTURAL 4" LOUVER
SCALE: 3/8"=1'-0"

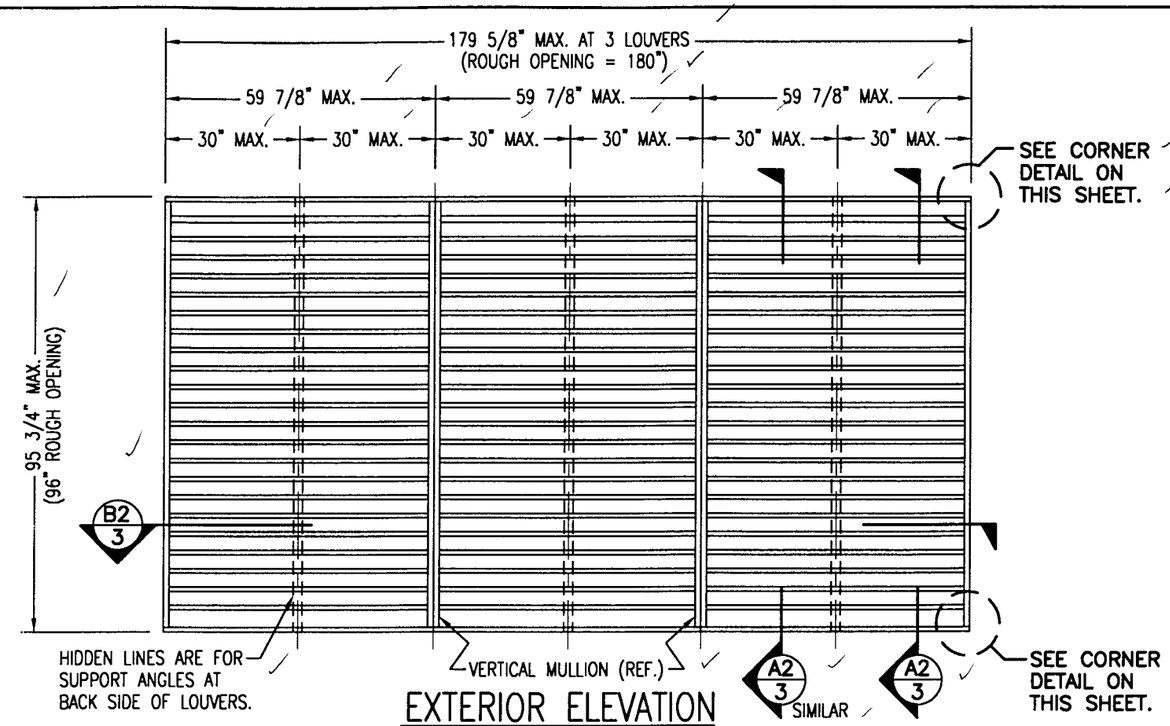

EXTERIOR ELEVATION
NON-ARCHITECTURAL 4" LOUVER
SCALE: 3/8"=1'-0"

NOTE: THIS LOUVER SYSTEM MAY CONSIST OF AN UNLIMITED NUMBER OF SECTIONS PROVIDING EACH SECTION DOES NOT EXCEED 59 7/8" X 95 3/4" IN SIZE.

MAX. ALLOWABLE DESIGN WIND PRESSURE	
POSITIVE	NEGATIVE
150 PSF	150 PSF
NOTE: SEE LOAD TABLE ON SHEET 7 FOR VARIATIONS OF PRESSURES WITH RESPECT TO PANEL WIDTH & CLIP SPACING.	

NOTE: THIS LOUVER SYSTEM MAY CONSIST OF AN UNLIMITED NUMBER OF SECTIONS PROVIDING EACH SECTION DOES NOT EXCEED 59 7/8" X 95 3/4" IN SIZE.

GENERAL NOTES:

1. MAXIMUM ALLOWABLE INDIVIDUAL PANEL SIZE = 59 7/8" X 95 3/4"
2. MAXIMUM ASSEMBLY SIZE = UNLIMITED WIDTH, UP TO 95 3/4" HEIGHT.
3. ASSEMBLIES/SECTIONS MAY BE STACKED VERTICALLY PROVIDING A STRUCTURAL SUPPORT IS DESIGNED AND INSTALLED BY OTHERS TO SUPPORT ALL LOADS TRANSFERED FROM THE LOUVER ASSEMBLY.
4. MAXIMUM UNSUPPORTED BLADE LENGTH SHALL NOT EXCEED 30".
5. ALL FASTENERS SHALL BE PLATED STEEL OR 304 STAINLESS STEEL.
6. SEPARATION OF DISSIMILAR MATERIALS MUST BE MAINTAINED PER SECTION 3004.4 OF THE SOUTH FLORIDA BUILDING CODE 1994 EDITION.
7. APPROVED TYPES OF OPENINGS: 3000 PSI CONCRETE/MASONRY, WOOD OR STEEL. SEE SHEETS 4 & 5 FOR ANCHORING DETAILS.
8. THESE LOUVER SYSTEMS HAVE BEEN TESTED, ANALYZED AND APPROVED FOR DESIGN PRESSURES NOT TO EXCEED THOSE SHOWN IN THE LOAD TABLE ON SHEET 7.
9. THIS SYSTEM HAS NOT BEEN TESTED FOR WATER INFILTRATION RESISTANCE AND IS NOT A WATER RESISTANT SYSTEM.
10. BUCKING, OPENINGS & BUCKING FASTENERS MUST BE DESIGNED & INSTALLED TO WITHSTAND WIND LOADS AS DETERMINED FOR EACH APPLICATION.
11. ALL HARDWARE & FASTENERS SHALL BE IN ACCORDANCE WITH THESE DRAWINGS & MAY NOT VARY UNLESS SPECIFICALLY MENTIONED ON THESE DRAWINGS.
12. THE DETAILS & SPECIFICATIONS HERE-IN REPRESENT THE PRODUCTS PROPOSED FOR IMPACT, CYCLIC & UNIFORM STATIC AIR PRESSURE TESTING IN CONFORMANCE WITH DADE COUNTY PROTOCALS PA-201, 202 & 203 FOR BOTH IMPACT & NON-IMPACT LOUVERS.
13. THESE LOUVER SYSTEMS HAVE BEEN DESIGNED IN ACCORDANCE WITH THE SOUTH FLORIDA BUILDING CODE 1994 EDITION.
14. THIS PRODUCT HAS BEEN TESTED IN ACCORDANCE WITH DADE COUNTY PROTOCALS PA-201, 202 & 203 FOR LARGE MISSLE IMPACT, STRUCTURAL & CYCLIC TESTING.

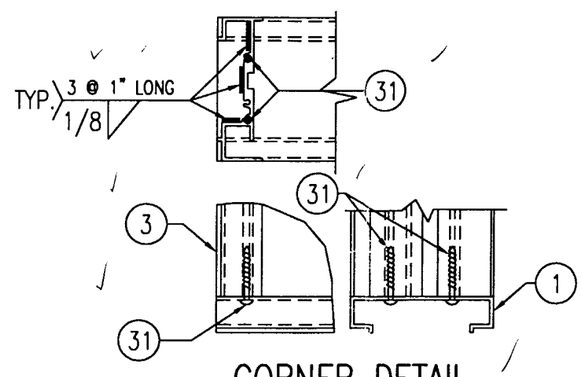

CORNER DETAIL

APPROVED AS COMPLYING WITH THE SOUTH FLORIDA BUILDING CODE
DATE July 27, 2000
BY
PRODUCT CONTROL DIVISION
BUILDING CODE COMPLIANCE OFFICE
ACCEPTANCE NO. 99-1227.14

JUN 16 2000
WARREN W. SCHAEFER, P.E.
STRUCTURAL ENGINEER
P.E. No. 44135

W. W. SCHAEFER ENGINEERING & CONSULTING, P.A.
STRUCTURAL CONSULTING ENGINEERS
600 SANDTREE DRIVE; SUITE 203B
PALM BEACH GARDENS, FL 33403
PHONE: 561-775-4902

REVISION	DATE	DRN	CK	APPD

awv american warming and ventilating
A MESTEK COMPANY
7301 INTERNATIONAL DRIVE HOLLAND, OHIO
PHONE 419-865-5000; FAX 419-865-1375

LE-22 TEST LOUVER
ARCH. & NON-ARCH. LOUVER
ELEVATIONS & NOTES

CKD.BY		APPD.BY W.W.S.	SHEET: 1 of 7
DRN.BY W.W.S.		DWG. NO. 31604-4	REV.
DATE 06-16-00			

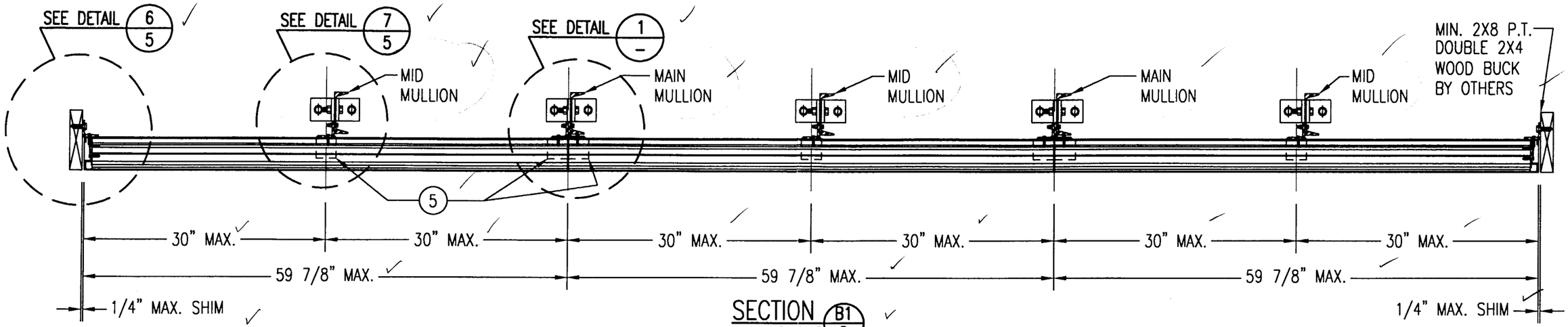

SECTION B1/2
SCALE: 1"=1'-0"
ARCHITECTURAL LOUVER

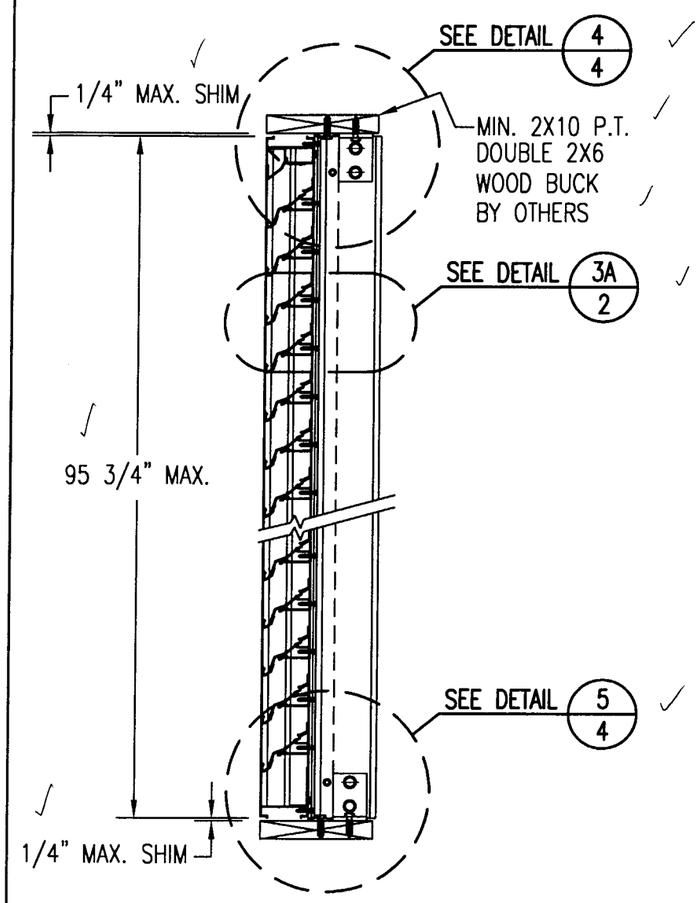

SECTION A1/2
SCALE: 1"=1'-0"
ARCHITECTURAL LOUVER

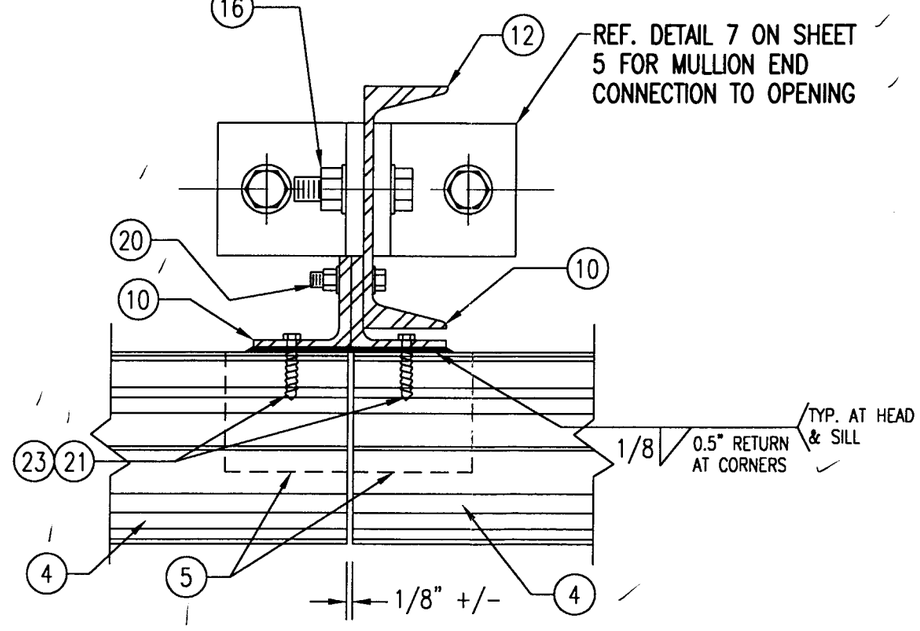

DETAIL 1/–
SCALE: 1/3 FULL
ARCHITECTURAL LOUVER

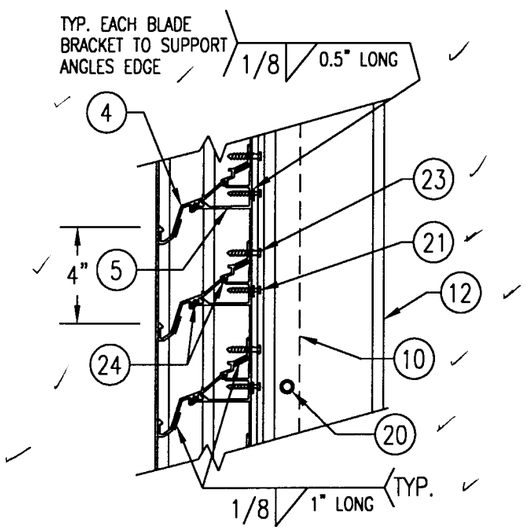

DETAIL 3A/2
SCALE: 2"=1'-0"
TYP. AT ALL MULLIONS THIS SHEET

APPROVED AS COMPLYING WITH THE SOUTH FLORIDA BUILDING CODE
DATE July 27, 2000
BY
PRODUCT CONTROL DIVISION
BUILDING CODE COMPLIANCE OFFICE
ACCEPTANCE NO. 99-1227.14

JUN 16 2000
WARREN W. SCHAEFER, P.E.
STRUCTURAL ENGINEER
P.E. No. 44135

W. W. SCHAEFER ENGINEERING & CONSULTING, P.A.
STRUCTURAL CONSULTING ENGINEERS
600 SANDTREE DRIVE; SUITE 203B
PALM BEACH GARDENS, FL 33403
PHONE: 561-775-4902

REVISION	DATE	DRN	CK	APPD

awv american warming and ventilating
A MESTEK COMPANY
7301 INTERNATIONAL DRIVE HOLLAND, OHIO
PHONE 419-865-5000; FAX 419-865-1375

LE-22 TEST LOUVER
ARCHITECTURAL LOUVER
SECTIONS & DETAILS

CKD.BY		APPD.BY W.W.S.	SHEET: 2 of 7
DRN.BY	W.W.S.	DWG. NO. 31604-4	REV.
DATE	06-16-00		

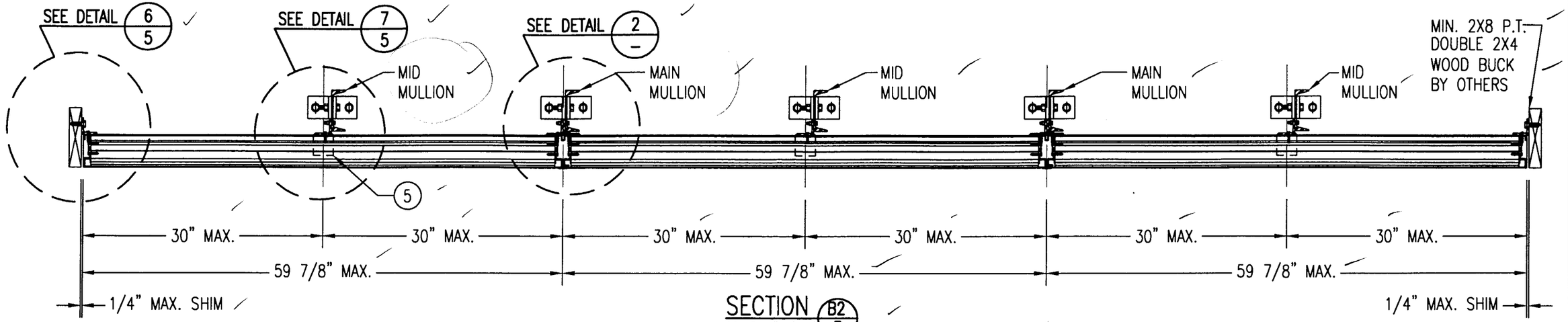

SECTION B2/3
SCALE: 1"=1'-0"
NON-ARCHITECTURAL LOUVER

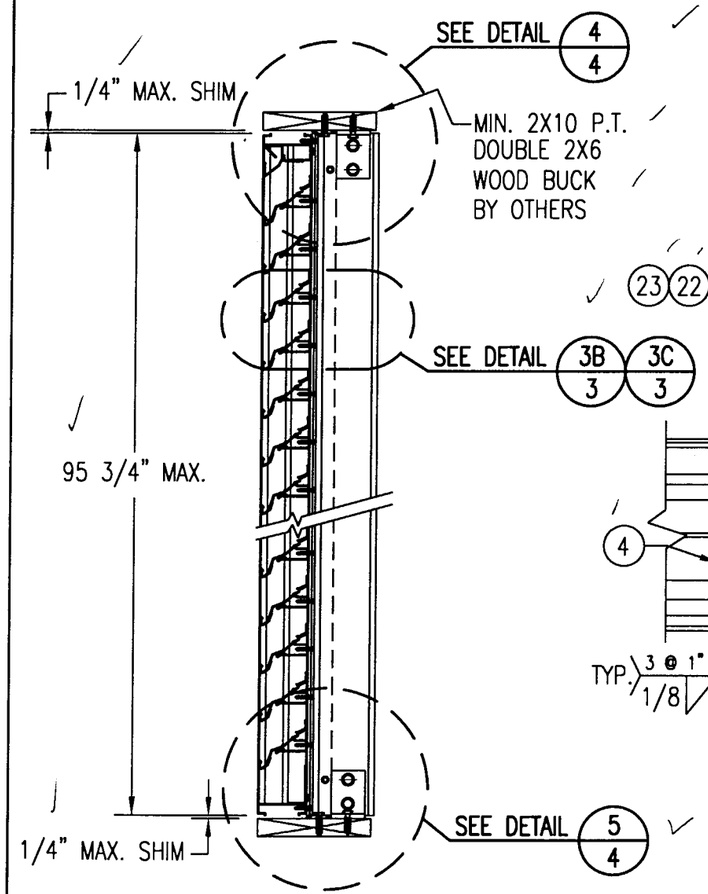

SECTION A2/3
SCALE: 1"=1'-0"
NON-ARCHITECTURAL LOUVER

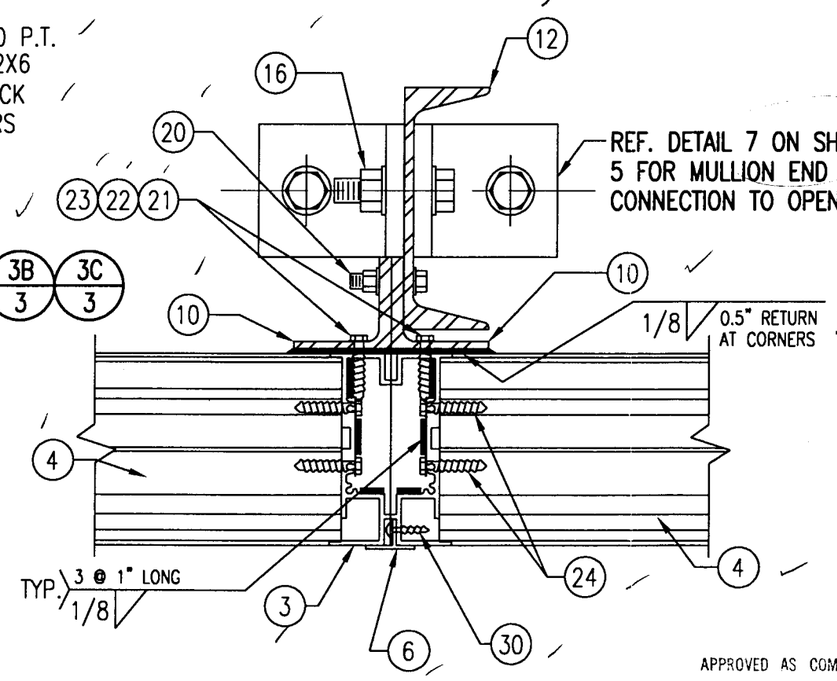

DETAIL 2/–
SCALE: 2"=1'-0"
NON-ARCHITECTURAL LOUVER

NOTE: SIDE JAMBS ARE ADDITIONALLY FASTENED TO THE SILL & HEAD WITH 2 NO. 7 X 1" SMS THROUGH SILL & INTO JAMB SPLINES.

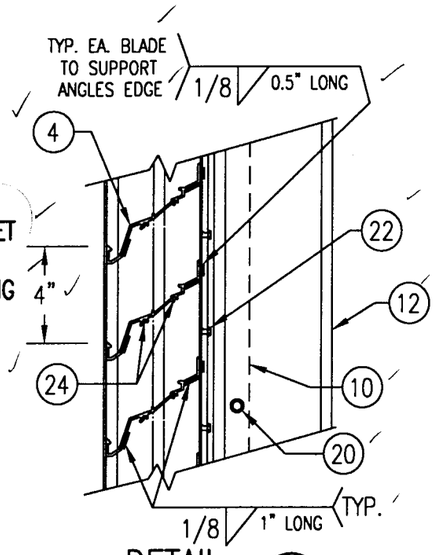

DETAIL 3B/3
SCALE: 2"=1'-0"
TYP. AT MAIN MULLIONS THIS SHEET

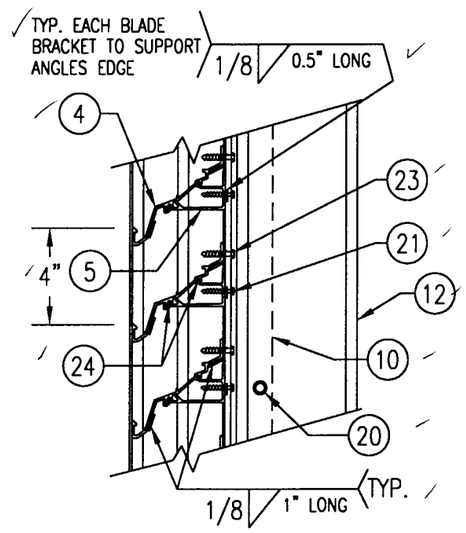

DETAIL 3C/3
SCALE: 2"=1'-0"
TYP. AT ALL MID-SPAN MULLIONS THIS SHEET

APPROVED AS COMPLYING WITH THE SOUTH FLORIDA BUILDING CODE
DATE July 27, 2000
BY
PRODUCT CONTROL DIVISION
BUILDING CODE COMPLIANCE OFFICE
ACCEPTANCE NO. 99-1227.14

JUN 16 2000
WARREN W. SCHAEFER, P.E.
STRUCTURAL ENGINEER
P.E. No. 44135

W. W. SCHAEFER ENGINEERING & CONSULTING, P.A.
STRUCTURAL CONSULTING ENGINEERS
600 SANDTREE DRIVE; SUITE 203B
PALM BEACH GARDENS, FL 33403
PHONE: 561-775-4902

REVISION	DATE	DRN	CK	APPD

awv american warming and ventilating
A MESTEK COMPANY
7301 INTERNATIONAL DRIVE HOLLAND, OHIO
PHONE 419-865-5000; FAX 419-865-1375

LE-22 TEST LOUVER
NON-ARCHITECTURAL LOUVER
SECTIONS & DETAILS

CKD.BY		APPD.BY W.W.S.	SHEET: 3 of 7
DRN.BY	W.W.S.	DWG. NO. 31604-4	REV.
DATE	06-16-00		

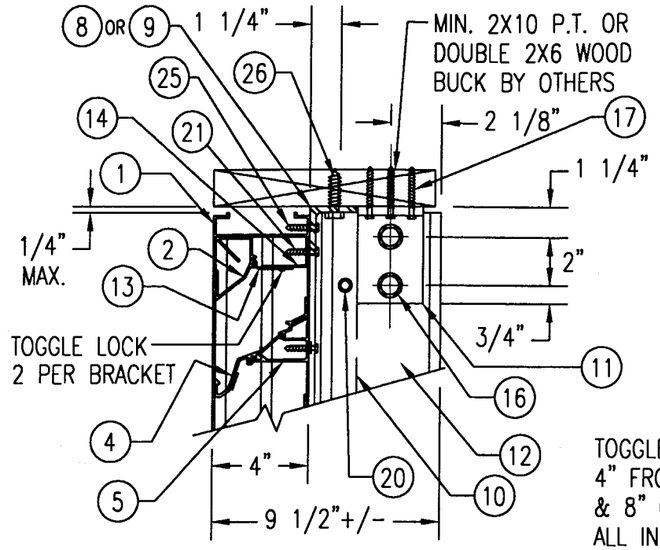

WOOD FRAMED OPENING

SEE "DETAIL 3A & 3B" FOR LOUVER BLADE DETAILS

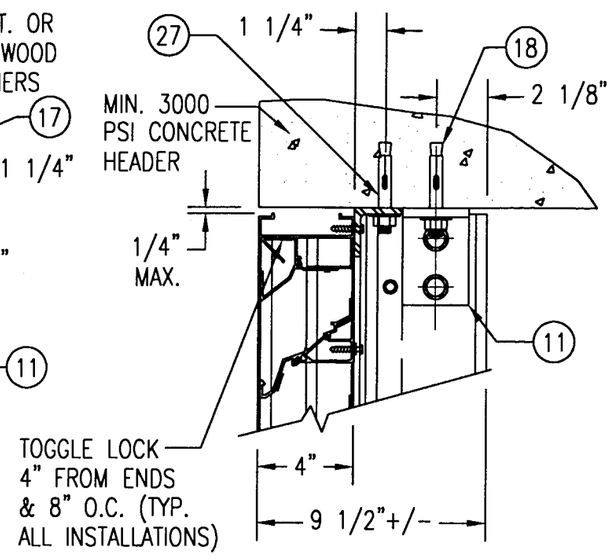

CONCRETE HEAD

SEE "WOOD OPENING" FOR DETAIL NOT SHOWN
(MASONRY ACCEPTABLE AT SIDES ONLY
AND MAY NOT BE USED AT HEAD OR SILL)

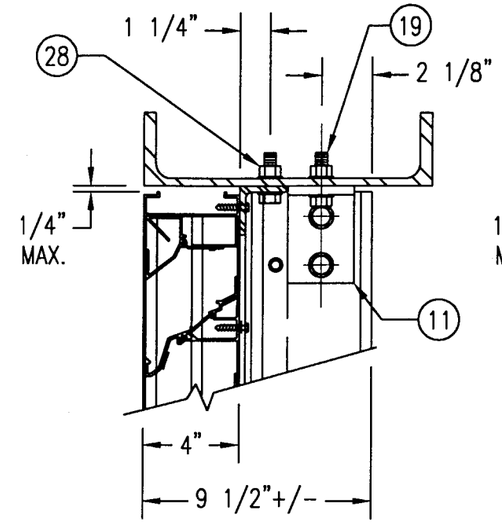

STEEL FRAME OPENING (BOLTED)

SEE "WOOD OPENING" FOR DETAIL NOT SHOWN

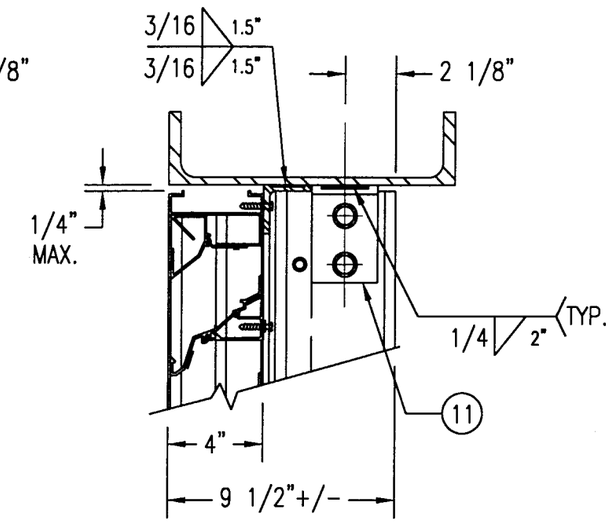

STEEL FRAME OPENING (WELDED)

SEE "WOOD OPENING" FOR DETAIL NOT SHOWN

DETAIL 4/4
SCALE: 2"=1'-0"

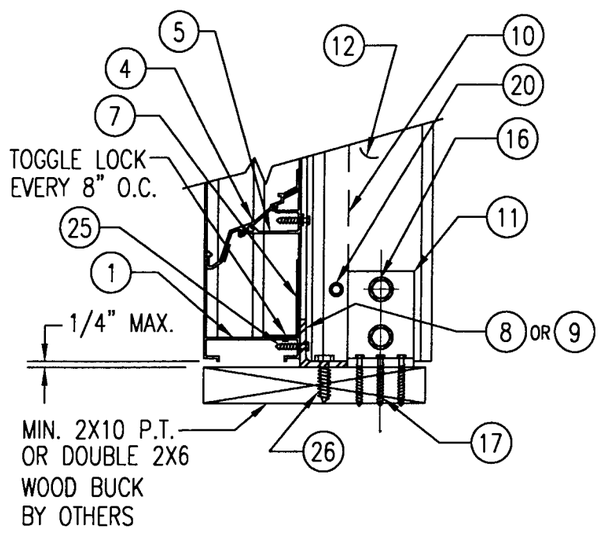

WOOD FRAMED OPENING

SEE "DETAIL 3A & 3B" FOR LOUVER BLADE DETAILS

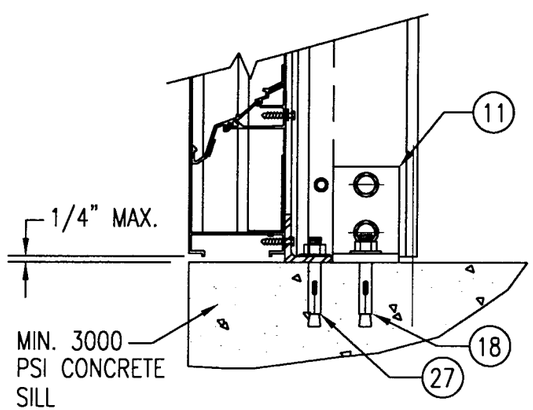

CONCRETE SILL

SEE "WOOD OPENING" FOR DETAIL NOT SHOWN
(MASONRY ACCEPTABLE AT SIDES ONLY
AND MAY NOT BE USED AT HEAD OR SILL)

DETAIL 5/4
SCALE: 2"=1'-0"

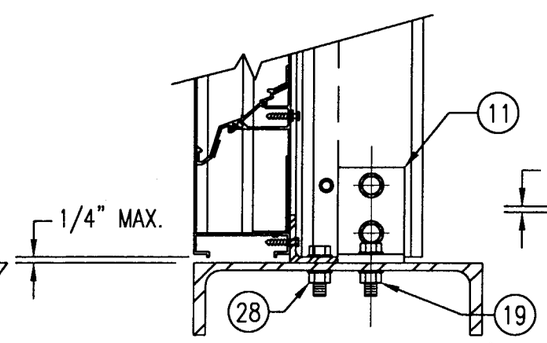

STEEL FRAME OPENING (BOLTED)

SEE "WOOD OPENING" FOR DETAIL NOT SHOWN

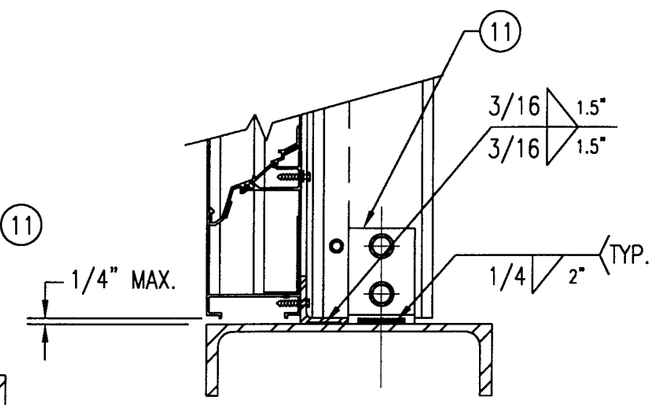

STEEL FRAME OPENING (WELDED)

SEE "WOOD OPENING" FOR DETAIL NOT SHOWN

MASONRY MAY ONLY BE USED AT SIDES OF LOUVER PANELS & MAY NOT BE USED AT THE HEAD OR SILL.

APPROVED AS COMPLYING WITH THE SOUTH FLORIDA BUILDING CODE
DATE May 27, 2000
BY
PRODUCT CONTROL DIVISION
BUILDING CODE COMPLIANCE OFFICE
ACCEPTANCE NO. 99-1227.14

JUN 16 2000
WARREN W. SCHAEFER, P.E.
STRUCTURAL ENGINEER
P.E. No. 44135

W. W. SCHAEFER ENGINEERING & CONSULTING, P.A.
STRUCTURAL CONSULTING ENGINEERS
600 SANDTREE DRIVE; SUITE 203B
PALM BEACH GARDENS, FL 33403
PHONE: 561-775-4902

REVISION	DATE	DRN	CK	APPD

aWV american warming and ventilating
A MESTEK COMPANY
7301 INTERNATIONAL DRIVE HOLLAND, OHIO
PHONE 419-865-5000; FAX 419-865-1375

LE-22 TEST LOUVER
ARCH. & NON-ARCH. LOUVER
DETAILS

CKD.BY		APPD.BY W.W.S.	SHEET: 4 of 7
DRN.BY	W.W.S.	DWG. NO. 31604-4	REV.
DATE	06-16-00		

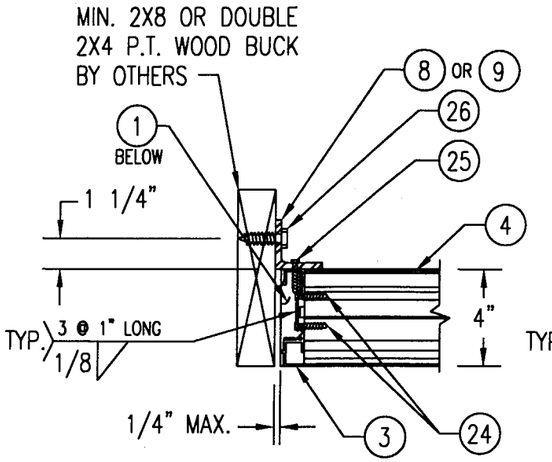

WOOD FRAMED OPENING

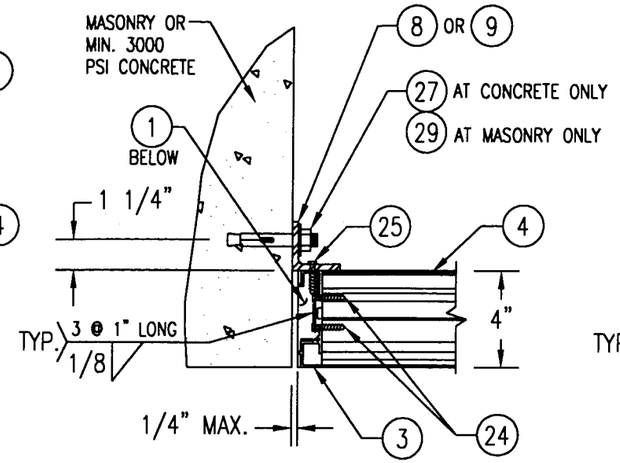

CONCRETE/MASONRY OPENING

(MASONRY ACCEPTABLE AT SIDES ONLY AND MAY NOT BE USED AT HEAD OR SILL)

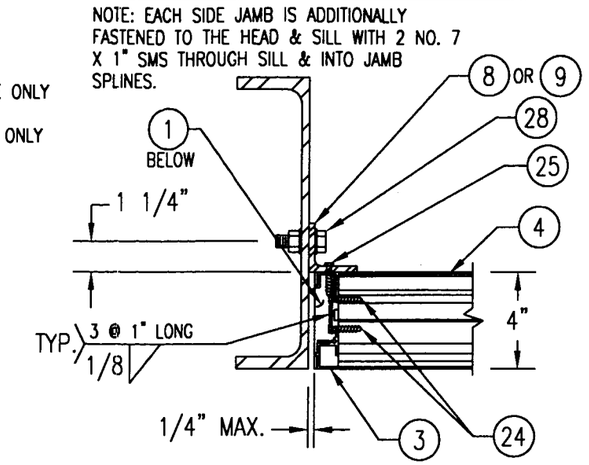

STEEL FRAME OPENING (BOLTED)

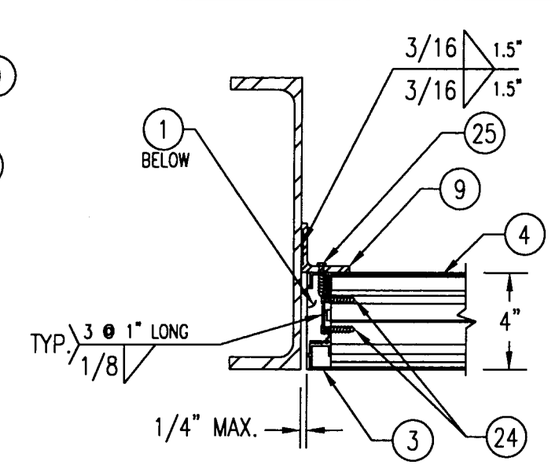

STEEL FRAME OPENING (WELDED)

DETAIL 6/5
SCALE: 2"=1'-0"

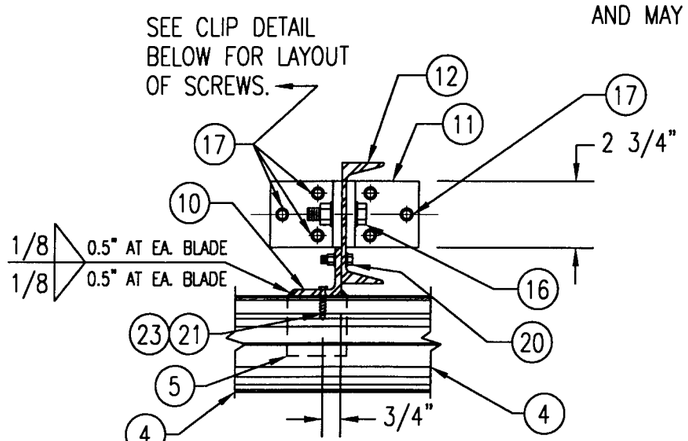

WOOD FRAMED OPENING

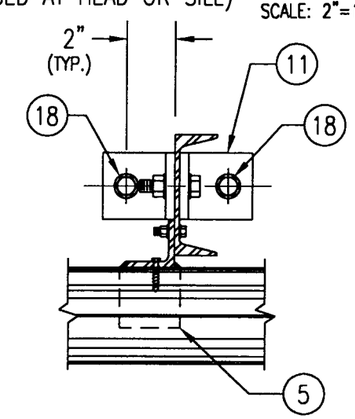

CONCRETE HEAD & SILL

SEE "WOOD OPENING" FOR DETAIL NOT SHOWN
(MASONRY ACCEPTABLE AT SIDES ONLY
AND MAY NOT BE USED AT HEAD OR SILL)

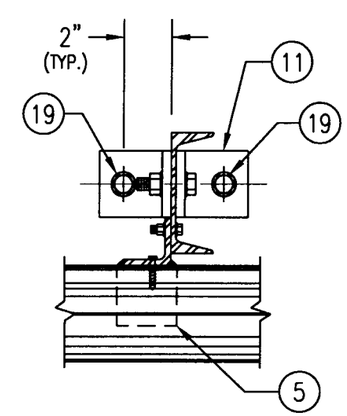

STEEL FRAME OPENING (BOLTED)

SEE "WOOD OPENING" FOR DETAIL NOT SHOWN

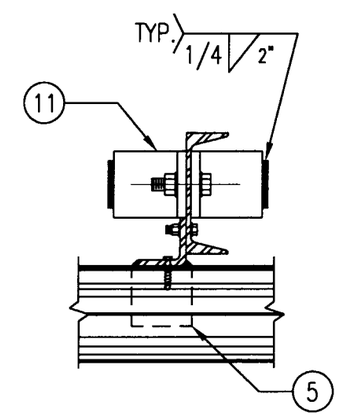

STEEL FRAME OPENING (WELDED)

SEE "WOOD OPENING" FOR DETAIL NOT SHOWN

DETAIL 7/5
SCALE: 2"=1'-0"

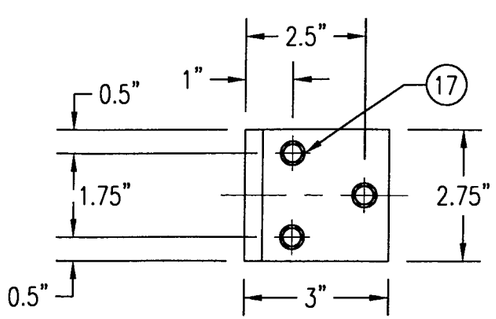

MULLION CLIP DETAIL @ WOOD INSTALLATION

MASONRY MAY ONLY BE USED AT SIDES OF LOUVER PANELS & MAY NOT BE USED AT THE HEAD OR SILL.

APPROVED AS COMPLYING WITH THE
SOUTH FLORIDA BUILDING CODE
DATE July 27, 2000
BY
PRODUCT CONTROL DIVISION
BUILDING CODE COMPLIANCE OFFICE
ACCEPTANCE NO. 99-1227.14

JUN 16 2000

WARREN W. SCHAEFER, P.E.
STRUCTURAL ENGINEER
P.E. No. 44135

W. W. SCHAEFER ENGINEERING & CONSULTING, P.A.
STRUCTURAL CONSULTING ENGINEERS
600 SANDTREE DRIVE; SUITE 203B
PALM BEACH GARDENS, FL 33403
PHONE: 561-775-4902

REVISION	DATE	DRN / CK	APPD

awv american warming and ventilating
A MESTEK COMPANY
7301 INTERNATIONAL DRIVE HOLLAND, OHIO
PHONE 419-865-5000; FAX 419-865-1375

LE-22 TEST LOUVER
ARCH. & NON-ARCH. LOUVER
DETAILS

CKD.BY		APPD.BY W.W.S.	SHEET: 5 of 7
DRN.BY	W.W.S.	DWG. NO. 31604-4	REV.
DATE	06-16-00		

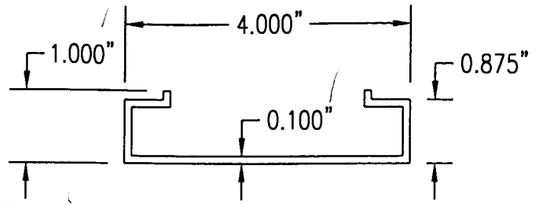

1 HEAD & SILL JAMB EXTRUSION
6063-T5 ALUMINUM
SCALE: 1/2 FULL

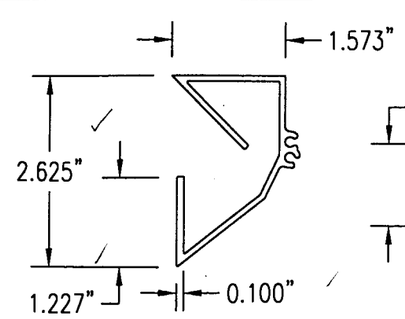

2 PARTIAL BLADE
6063-T5 ALUMINUM
SCALE: 1/2 FULL

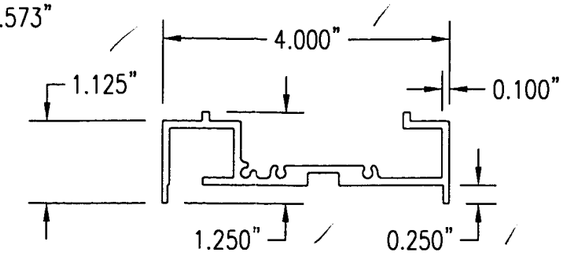

3 SIDE JAMB
6063-T5 ALUMINUM
SCALE: 1/2 FULL

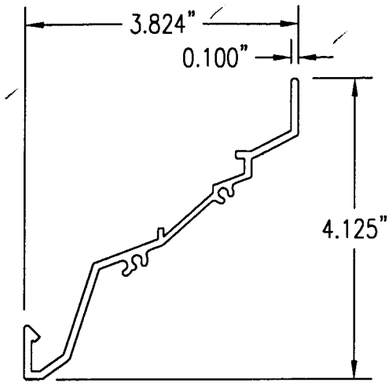

4 LOUVER BLADE
6063-T5 ALUMINUM
SCALE: 1/2 FULL

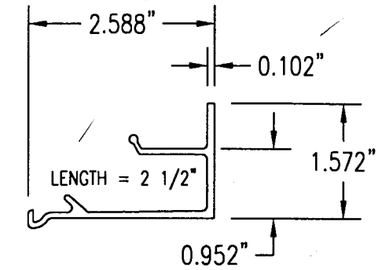

5 BLADE BRACE
6063-T5 ALUMINUM
SCALE: 1/2 FULL

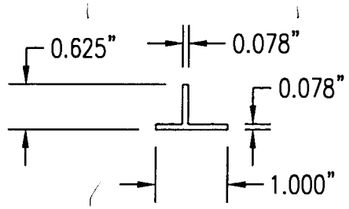

6 MULLION CAP
6063-T5 ALUMINUM
SCALE: 1/2 FULL

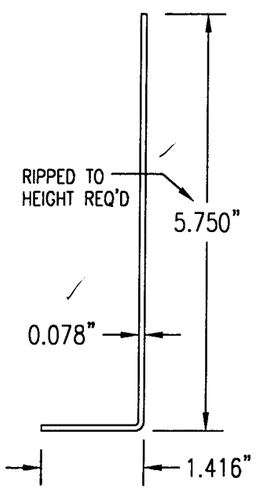

7 SILL ANGLE
6063-T5 ALUMINUM
SCALE: 1/2 FULL

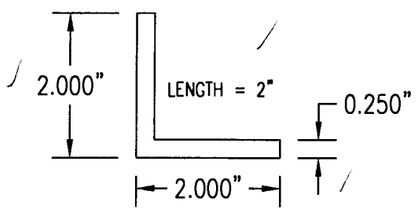

8 CONNECTION ANGLE
6063-T5 ALUMINUM
SCALE: 1/2 FULL

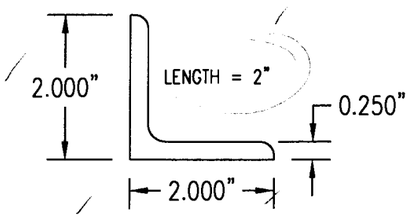

9 CONNECTION ANGLE
A36 STEEL
SCALE: 1/2 FULL

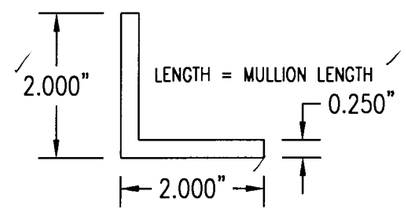

10 MULLION ANGLE
6063-T5 ALUMINUM
SCALE: 1/2 FULL

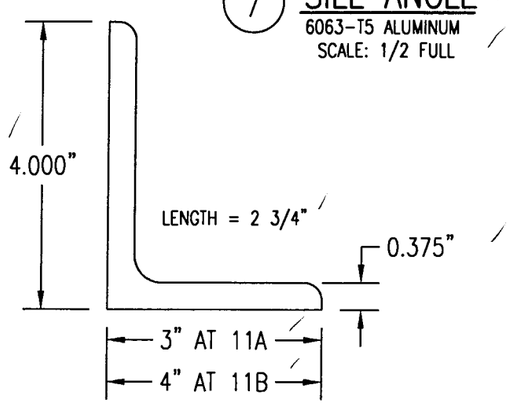

11A 11B MULLION END CONNECTION ANGLE
A36 STEEL
SCALE: 1/2 FULL

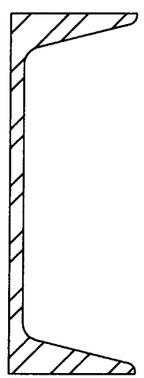

12 C5X6.7 MULLION
A36 STEEL
SCALE: 1/2 FULL

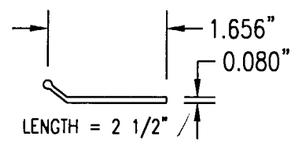

13 PARTIAL BLADE REINFORCEMENT PLATE
6063-T5 ALUMINUM
SCALE: 1/2 FULL

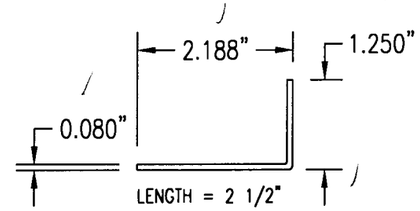

14 PARTIAL BLADE REINFORCEMENT ANGLE
6063-T5 ALUMINUM
SCALE: 1/2 FULL

APPROVED AS COMPLYING WITH THE
SOUTH FLORIDA BUILDING CODE
DATE July 27, 2000
BY
PRODUCT CONTROL DIVISION
BUILDING CODE COMPLIANCE OFFICE
ACCEPTANCE NO. 99-1227.14

JUN 16 2000
WARREN W. SCHAEFER, P.E.
STRUCTURAL ENGINEER
P.E. No. 44135

W. W. SCHAEFER ENGINEERING & CONSULTING, P.A.
STRUCTURAL CONSULTING ENGINEERS
600 SANDTREE DRIVE; SUITE 203B
PALM BEACH GARDENS, FL 33403
PHONE: 561-775-4902

REVISION	DATE	DRN	CK	APPD

aWV american warming and ventilating
A MESTEK COMPANY
7301 INTERNATIONAL DRIVE HOLLAND, OHIO
PHONE 419-865-5000; FAX 419-865-1375

LE-22 TEST LOUVER
ARCH. & NON-ARCH. LOUVER
PARTS & EXTRUSIONS

CKD.BY		APPD.BY W.W.S.	SHEET: 6 of 7
DRN.BY	W.W.S.	DWG. NO. 31604-4	REV.
DATE	06-16-00		

ALLOWABLE WIND PRESSURE VS. JAMB CLIP SPACING AND PANEL WIDTH

PANEL WIDTH (INCHES)	CLIP SPACING (INCHES)	ALLOWABLE PRESSURE WITH MID SPAN MULLION (PSF)	ALLOWABLE PRESSURE WITHOUT MID SPAN MULLION (PSF)
16	8	150	150
	12	150	150
	16	150	140
	20	150	105
	24	150	70
20	8	150	150
	12	150	140
	16	150	112
	20	150	84
	24	150	56
24	8	150	140
	12	150	117
	16	150	93
	20	150	70
	24	125	47
28	8	150	82
	12	150	68
	16	150	54
	20	150	41
	24	107	27
30	8	150	62
	12	150	52
	16	150	41
	20	140	31
	24	93	–
36	8	150	–
	12	150	–
	16	150	–
	20	125	–
	24	83	–
42	8	150	–
	12	150	–
	16	142	–
	20	107	–
	24	71	–
48	8	150	–
	12	150	–
	16	125	–
	20	93	–
	24	62	–
54	8	150	–
	12	138	–
	16	111	–
	20	83	–
	24	55	–
60	8	150	–
	12	125	–
	16	100	–
	20	75	–
	24	50	–

MATERIAL LIST

NO.	DESCRIPTION	NOTES/SPECIFICATIONS
	PARTS/EXTRUSIONS	
1	HEAD & SILL FRAME	6063-T5 ALUMINUM
2	PARTIAL BLADE & HEAD	6063-T5 ALUMINUM
3	SIDE JAMB FRAME	6063-T5 ALUMINUM
4	LOUVER BLADE	6063-T5 ALUMINUM
5	BLADE SUPPORT BRACKET (2 1/2" LONG)	6063-T5 ALUMINUM
6	MULLION CAP	6063-T5 ALUMINUM; FULL LENGTH OF MULLION JAMBS
7	SILL ANGLE	6063-T5 ALUMINUM; FULL WIDTH OF PANEL
8	L2X2X1/4 JAMB CONNECTION ANGLE 2" LONG	6063-T5 ALUMINUM; WITHIN 4" OF JAMB ENDS & SPACED PER LOAD TABLE ON SHT. 2
9	L2X2X1/4 OPTIONAL JAMB CONNECTION ANGLE 2" LONG	A36 STEEL; WITHIN 4" OF JAMB ENDS & SPACED PER LOAD TABLE ON SHT. 2
10	L2X2X1/4 CONTINUOUS MULLION CONNECTION ANGLE	6063-T5 ALUMINUM; FULL LENGTH OF CHANNEL MULLION
11	L4X3X3/8 MULLION END CONNECTION ANGLE 2 3/4" LONG	A36 STEEL; 2 PER MULLION END
12	C5X6.7 MULLION	A36 STEEL; FULL HEIGHT OF PANELS
13	PARTIAL BLADE REINFORCEMENT PLATE (2 1/2" LONG)	6063-T5 ALUMINUM
14	PARTIAL BLADE REINFORCEMENT ANGLE (2 1/2" LONG)	6063-T5 ALUMINUM
15	OPEN	
	FASTENERS	
16	1/2" X 2" A307 HEX HEAD PLATED STEEL OR S/STL BOLT	WITH FLAT WASHERS, LOCK WASHER & NUT; 2 PER MULLION END
17	NO. 14 S.S. SMS SCREWS	3 PER MULLION END CLIP WITH MIN. 1 1/2" WOOD EMBED
18	5/8" X 2 1/4" SLEEVE ANCHOR WITH FLAT WASHER	USA KINGPIN ANCHOR; 1 PER CHANNEL END CONNECTION ANGLE INTO CONCRETE ONLY
19	1/2" X 2" A307 HEX HEAD PLATED STEEL OR S/STL BOLT	WITH FLAT WASHERS, LOCK WASHER & NUT; 1 PER CHANNEL END CONNECTION ANGLE INTO STEEL FRAME
20	5/16-18 UNC X 1 1/2" HEX HEAD STEEL OR S/STL BOLT	WITH FLAT WASHER, LOCK WASHER & NUT; WITHIN 4" OF MULLION ENDS & MAX. 8" O.C.
21	NO. 8 X 3/4" SMS SCREW	1 AT EACH LOUVER BLADE SUPPORT BRACKET AT ARCHITECTURAL MAIN MULLIONS & ALL MID-SPAN MULLIONS
22	NO. 14 X 1 1/4" HILTI TEK SCREW	WITHIN 3/4" OF MULLION ENDS & MAX. 4" O.C. INTO FRAME
23	NO. 14 X 1" SMS SCREW	1 AT EACH LOUVER BLADE AT ALL ARCHITECTURAL MAIN MULLIONS & ALL MID-SPAN MULLIONS
24	NO. 7 X 1" SMS SCREW	2 PER EACH LOUVER BLADE END THROUGH JAMB & INTO BLADE SPLINES
25	NO. 14 X 1 1/4" HILTI TEK SCREW	2 PER EACH HEAD, SILL & SIDE JAMB CONNECTION ANGLE
26	1/2" X 2" LAG SCREW WITH FLAT WASHER	1 PER EACH HEAD, SILL & SIDE JAMB CONNECTION ANGLE INTO WOOD FRAME
27	5/8" X 2 1/4" SLEEVE ANCHOR WITH FLAT WASHER	USA KINGPIN ANCHOR; 1 PER EACH HEAD, SILL & SIDE JAMB CONNECTION ANGLE INTO CONCRETE ONLY
28	1/2" X 2" HEX HEAD A307 PLATED STEEL OR S/STL BOLT	WITH FLAT WASHERS, LOCK WASHER & NUT; 1 PER EA. JAMB CONNECTION ANGLE INTO STEEL FRAME
29	3/8" X 1 7/8" SLEEVE ANCHOR WITH FLAT WASHER	RED HEAD DYNABOLT WITH MIN 1 1/2" BLOCK/CONCRETE EMBED (1 PER FRAME SUPPORT CLIP)
30	NO. 8 X 1/2" SMS SCREW	WITHIN 2" OF MULLION ENDS & MAX. 12" O.C. (MULLION CAP TO MULLION)
31	NO. 7 X 1" SMS SCREWS	2 PER FRAME CORNER THROUGH SILL/HEAD FRAME & INTO JAMB SPLINES

PRESSURE TABLE NOTES:

1. WHEN THE PANEL WIDTH IS 30" OR LESS, NO MID SPAN MULLION IS REQUIRED PROVIDING COMPLIANCE WITH THE TABLE.
2. ALL PRESSURES IN THIS TABLE ARE FOR BOTH POSITIVE & NEGATIVE WIND PRESSURE.

APPROVED AS COMPLYING WITH THE SOUTH FLORIDA BUILDING CODE
DATE July 27, 2000
BY
PRODUCT CONTROL DIVISION
BUILDING CODE COMPLIANCE OFFICE
ACCEPTANCE NO. 99-1227.14

JUN 16 2000

WARREN W. SCHAEFER, P.E.
STRUCTURAL ENGINEER
P.E. No. 44135

W. W. SCHAEFER ENGINEERING & CONSULTING, P.A.
STRUCTURAL CONSULTING ENGINEERS
600 SANDTREE DRIVE; SUITE 203B
PALM BEACH GARDENS, FL 33403
PHONE: 561-775-4902

REVISION	DATE	DRN	CK	APPD

aWV american warming and ventilating
A MESTEK COMPANY
7301 INTERNATIONAL DRIVE HOLLAND, OHIO
PHONE 419-865-5000; FAX 419-865-1375

LE-22 TEST LOUVER
ARCH. & NON-ARCH. LOUVER
MATERIAL LIST & LOAD TABLE

CKD.BY		APPD.BY W.W.S.	SHEET: 7 of 7
DRN.BY	W.W.S.	DWG. NO. 31604-4	REV.
DATE	06-16-00		