MIAMI-DADE COUNTY, FLORIDA
METRO-DADE FLAGLER BUILDING

BUILDING CODE COMPLIANCE OFFICE
METRO-DADE FLAGLER BUILDING
140 WEST FLAGLER STREET, SUITE 1603
MIAMI, FLORIDA 33130-1563
(305) 375-2901 FAX (305) 375-2908

CONTRACTOR LICENSING SECTION
(305) 375-2527 FAX (305) 375-2558

CONTRACTOR ENFORCEMENT DIVISION
(305) 375-2966 FAX (305) 375-2908

PRODUCT CONTROL DIVISION
(305) 375-2902 FAX (305) 372-6339

PRODUCT CONTROL NOTICE OF ACCEPTANCE

M.Q. Windows, Inc.
1855 Griffin Road, Suite A-274
Dania ,FL 33004

Your application for Notice of Acceptance (NOA) of:
"JS series" Inswing / Outswing Mahogany Wood Windows-Impact
under Chapter 8 of the Code of Miami-Dade County governing the use of Alternate Materials and Types of Construction, and completely described herein, has been recommended for acceptance by the Miami-Dade County Building Code Compliance Office (BCCO) under the conditions specified herein.

This NOA shall not be valid after the expiration date stated below. BCCO reserves the right to secure this product or material at any time from a jobsite or manufacturer's plant for quality control testing. If this product or material fails to perform in the approved manner, BCCO may revoke, modify, or suspend the use of such product or material immediately. BCCO reserves the right to revoke this approval, if it is determined by BCCO that this product or material fails to meet the requirements of the South Florida Building Code.

The expense of such testing will be incurred by the manufacturer.

ACCEPTANCE NO.: 99-1228.05
EXPIRES: 02/08/2006

Raul Rodriguez
Chief Product Control Division

THIS IS THE COVERSHEET, SEE ADDITIONAL PAGES FOR SPECIFIC AND GENERAL CONDITIONS
BUILDING CODE & PRODUCT REVIEW COMMITTEE

This application for Product Approval has been reviewed by the BCCO and approved by the Building Code and Product Review Committee to be used in Miami-Dade County, Florida under the conditions set forth above.

Francisco J. Quintana, R.A.
Director
Miami-Dade County
Building Code Compliance Office

APPROVED: 02/08/2001

NOTICE OF ACCEPTANCE: SPECIFIC CONDITIONS

1. SCOPE

1.1 This approves a wood casement window, as described in Section 2 of this Notice of Acceptance, designed to comply with the South Florida Building Code (SFBC), 1994 Edition for Miami-Dade County, for the locations where the pressure requirements, as determined by SFBC Chapter 23, do not exceed the Design Pressure Rating values indicated in the approved drawings.

2. PRODUCT DESCRIPTION

2.1 The **JS Series Inswing / Outswing Mahogany Wood Window-Large Missile Impact Resistant** and its components shall be constructed in strict compliance with the following documents: Drawing No **MQJS-NOA3**, titled "JS Serie Inswing & Outswing Wood Windows" Sheets 1 through 15 of 15, prepared by manufacturer, dated 01/10/99, revised on 07-11-00, signed and sealed by Walter A. Tillit Jr., P.E., bearing the Miami-Dade County Product Control approval stamp with the Notice of Acceptance number and approval date by the Miami-Dade County Product Control Division. These documents shall hereinafter be referred to as the approved drawings.

3. LIMITATIONS

3.1 This approval applies to single unit application of single or double casement windows only, as shown in approved drawings.

4. INSTALLATION

4.1 The inswing / outswing mahogany wood casement Windows and its components shall be installed in strict compliance with the approved drawings.

4.2 Hurricane protection system (shutters): the installation of this unit **will not require** a hurricane protection system.

5. LABELING

5.1 Each unit shall bear a permanent label with the manufacturer's name or logo, city, state and following statement: "Miami-Dade County Product Control Approved".

5.2 The door slab itself shall also bear a permanent label, at the door inside edge, with the manufacturer's name or logo, city and state.

6. BUILDING PERMIT REQUIREMENTS

6.1 Application for building permit shall be accompanied by copies of the following:

6.1.1 This Notice of Acceptance

6.1.2 Duplicate copies of the approved drawings, as identified in Section 2 of this Notice of Acceptance, clearly marked to show the components selected for the proposed installation.

6.1.3 Any other documents required by the Building Official or the South Florida Building Code (SFBC) in order to properly evaluate the installation of this system.

Ishaq I. Chanda

Ishaq I. Chanda, P.E., Product Control Examiner
Product Control Division

M.Q Windows Inc.

ACCEPTANCE NO.: 99-1228.05

APPROVED : FEB 0 8 2001

EXPIRES : FEB 0 8 2006

NOTICE OF ACCEPTANCE: STANDARD CONDITIONS

1. Renewal of this Acceptance (approval) shall be considered after a renewal application has been filed and the original submitted documentation, including test supporting data, engineering documents, are no older than eight (8) years.

2. Any and all approved products shall be permanently labeled with the manufacturer's name, city, state, and the following statement: "Miami-Dade County Product Control Approved", or as specifically stated in the specific conditions of this Acceptance.

3. Renewals of Acceptance will not be considered if:
   a) There has been a change in the South Florida Building Code affecting the evaluation of this product and the product is not in compliance with the code changes;
   b) The product is no longer the same product (identical) as the one originally approved;
   c) If the Acceptance holder has not complied with all the requirements of this acceptance, including the correct installation of the product;
   d) The engineer who originally prepared, signed and sealed the required documentation initially submitted is no longer practicing the engineering profession.

4. Any revision or change in the materials, use, and/or manufacture of the product or process shall automatically be cause for termination of this Acceptance, unless prior written approval has been requested (through the filing of a revision application with appropriate fee) and granted by this office.

5. Any of the following shall also be grounds for removal of this Acceptance:
   a) Unsatisfactory performance of this product or process.
   b) Misuse of this Acceptance as an endorsement of any product, for sales, advertising or any other purpose.

6. The Notice of Acceptance number preceded by the words Miami-Dade County, Florida, and followed by the expiration date may be displayed in advertising literature. If any portion of the Notice of Acceptance is displayed, then it shall be done in its entirety.

7. A copy of this Acceptance as well as approved drawings and other documents, where it applies, shall be provided to the user by the manufacturer or its distributors and shall be available for inspection at the job site at all time. The engineer need not reseal the copies.

8. Failure to comply with any section of this Acceptance shall be cause for termination and removal of Acceptance.

9. This Notice of Acceptance consists of pages 1, 2 and this last page 3.

Ishaq I. Chanda

Ishaq I. Chanda, P.E., Product Control Examiner
Product Control Division

END OF THIS ACCEPTANCE

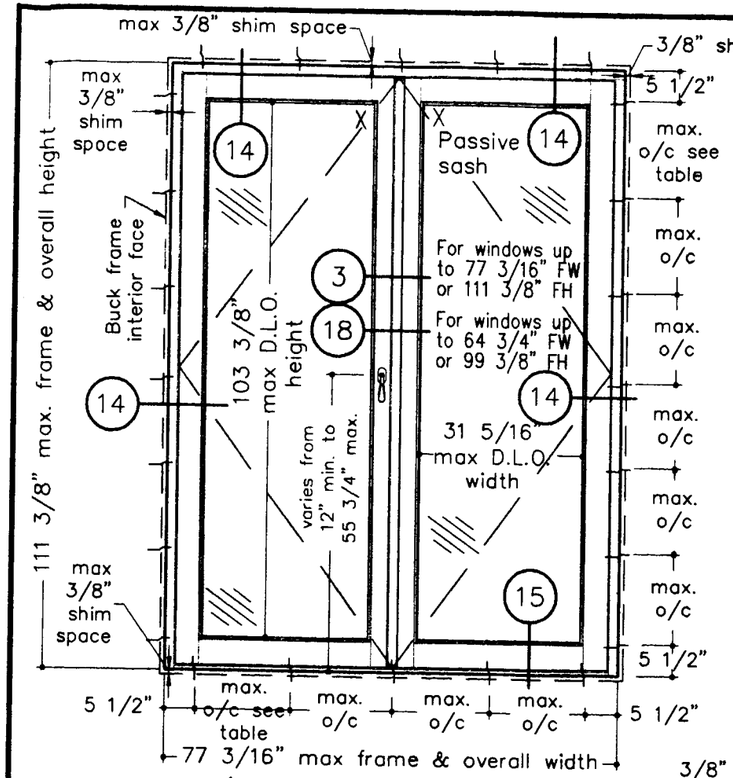

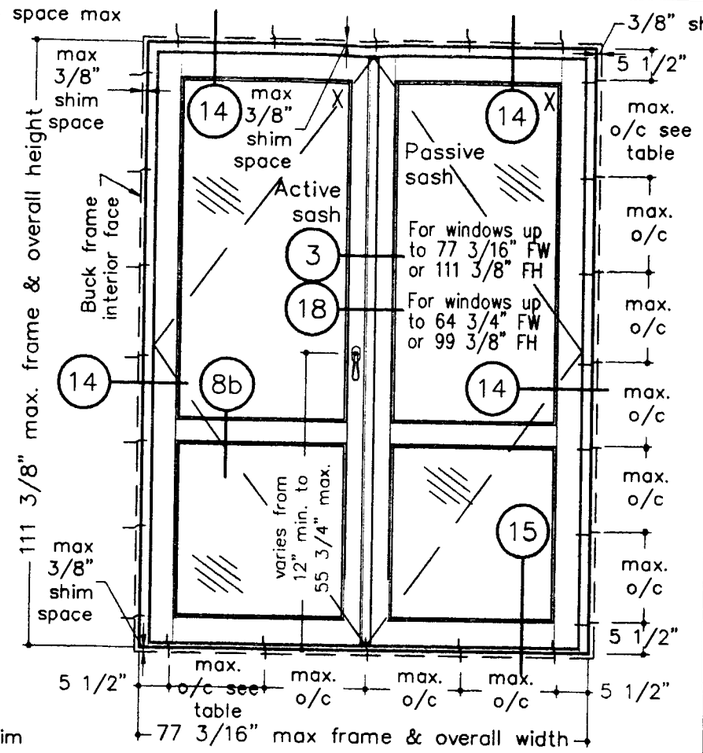

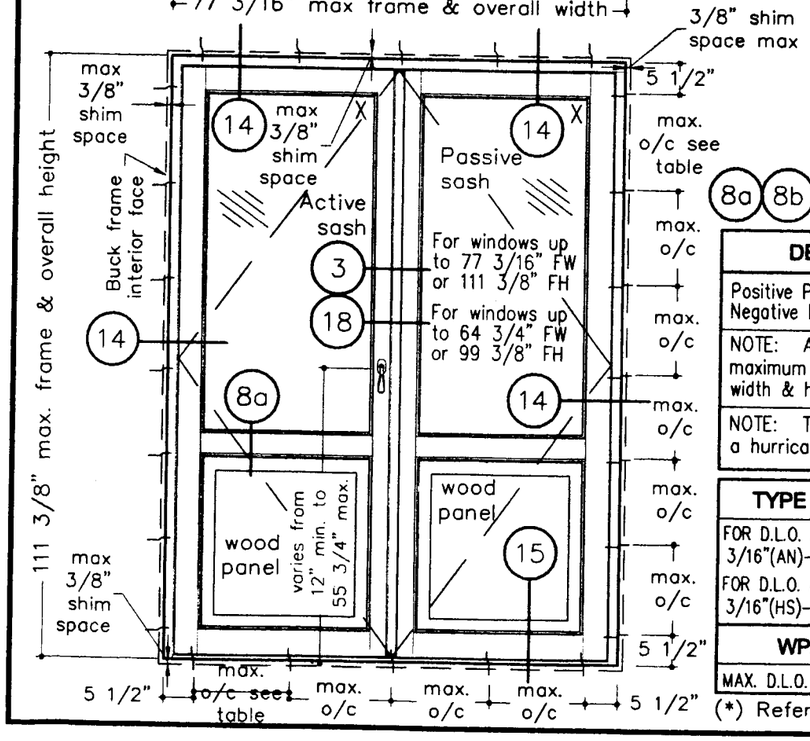

IN-SWING WINDOWS

CONFIGURATIONS: x, xx

VIEWED FROM THE OUTSIDE

WOOD: Mahogany

8a 8b ***Note: D.L.O. max. lenght @ Muntin bar must be less than 31 1/4"**

DESIGN PRESSURE
Positive Pressure: +58 psf Negative Pressure −68 psf
NOTE: All sizes noted are maximum sizes. Sizes smaller in width & height are permitted.
NOTE: This unit will not need a hurricane protective system.

TYPE OF GLASS: SINGLE, LAMINATED
FOR D.L.O. AREA UP TO 19 sqf: 15/32" (O.T.) MADE OF 3/16"(AN)−0.090" Saflex III G* interlayer−3/16"(HS)
FOR D.L.O. AREA UP TO 22.48 sqf: 15/32" (O.T.) MADE OF 3/16"(HS)−0.090" Saflex III G* interlayer−3/16"(HS)
WP: 1 3/4" RAISED WOOD PANEL
MAX. D.L.O. AREA: 7.81 sqf

(*) Refer to page14

MAX. HINGES SPACING

1488−03 steel hinges by Jardinier Massard secured with with 8 x #7 x 1" F.H. screws

Frame Height (in.) up to	Dist from corner	total Qty	Dist o/c (max)
39 1/2"	8"	2	20 9/16"
59"	8"	3	20 9/16"
79 1/2"	8"	4	20 9/16"
99 3/8"	8"	5	20 9/16"
111 3/8"	8"	5	23 3/8"

TABLE FOR MAX. DISTANCE (in.) BETWEEN BRACKET OR SCREW CONNECTIONS @JAMBS, HEAD OR SILL

Frame Width (in.) from − to	Max. Frame Height (in.) 60"	66"	72"	111 3/8"
0−60"	14"	14"	14"	14"
60−62"	14"	13"	13"	13"
62−68"	14"	13"	12"	12"
68−72"	14"	13"	11"	11"
72−77 3/16"	14"	13"	11"	11"

INSTALLATION DETAIL: 2 x PT WOOD BUCK

@head, jambs &sill detail:

Installation Bracket PDF-FS-05/D

Screwed to the buck frame using 1x #12 x 1 1/2" all threaded (a.T.)wood screws. Min. embedment is 1 1/4". Screwed to the window frame using 2x #10 x 1" a.T. wood screws. Min. embedment is 3/4".

Directly screwed:

@head, jambs &sill detail:

Screwed through the frame profile to the buck frame using #12 x 2 3/4" wood screws.
Min. embedment is 1 1/4".

INSTALLATION DETAIL: 1 x PT WOOD SHIM

@head, jambs &sill detail:

Installation Bracket PDF-FS-05/D

Screwed to the masonry using 1/4" x 2 1/2" Tapcon screws. Min. embedment is 1 1/4". Screwed to the window frame using 2x #10 x 1" wood screws. Min. embedment is 3/4".

Directly screwed:

@head, jambs &sill detail:

Directly screwed through the frame to the masonry using 1/4" x 4" Tapcon screws.
Min. embedment is 1 1/4".

Spacing: All fasteners spacing is 5 1/2" from corners. For Max. O/C, see table

Shim Space: 3/8" MAX. @ head, jambs & sill. Use std wood shims behind as required.

MQ WINDOWS OF EUROPE AND THE AMERICAS
1855 GRIFFIN ROAD, SUITE A-274
DANIA, FL 33004

JS SERIE INSWING & OUTSWING WOOD WINDOWS MIAMI DADE COUNTY

Drawing no.: MQJS−NOA3

Scale: 1=20	Drawn by: S. Marcotte
Date drawn: 01/10/99	Date revised: 07/11/00
File: DJS−W9801	Page: 1/15

STRUCTURALLY REVIEWED BY:

TILLIT TESTING & ENGINEERING COMPANY
6595 NW 36th STREET, STE. 217
MIAMI, FLORIDA 33166
WALTER A. TILLIT JR., P.E.
STRUCTURAL ENGINEER
FL. LIC.NO. 44167

1/10/01

APPROVED AS COMPLYING WITH THE SOUTH FLORIDA BUILDING CODE
DATE February 08, 2001
BY Ishaq I. Chanda
PRODUCT CONTROL DIVISION
BUILDING CODE COMPLIANCE OFFICE
ACCEPTANCE NO. 99-1228.05

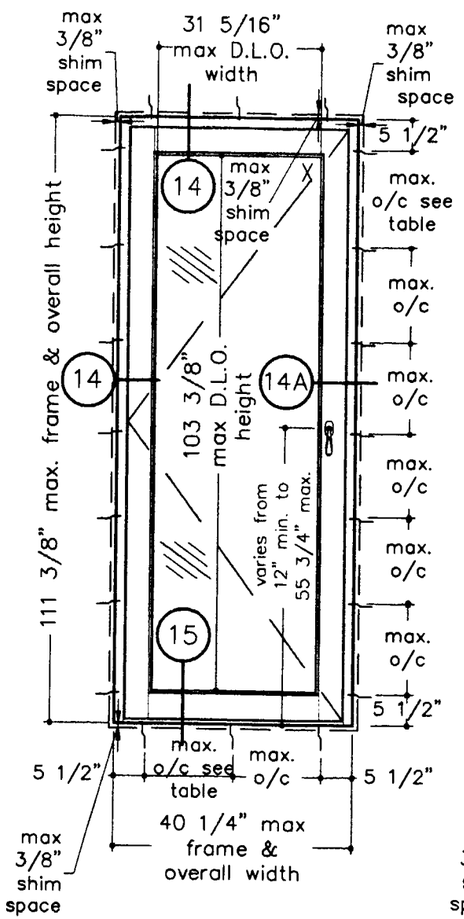

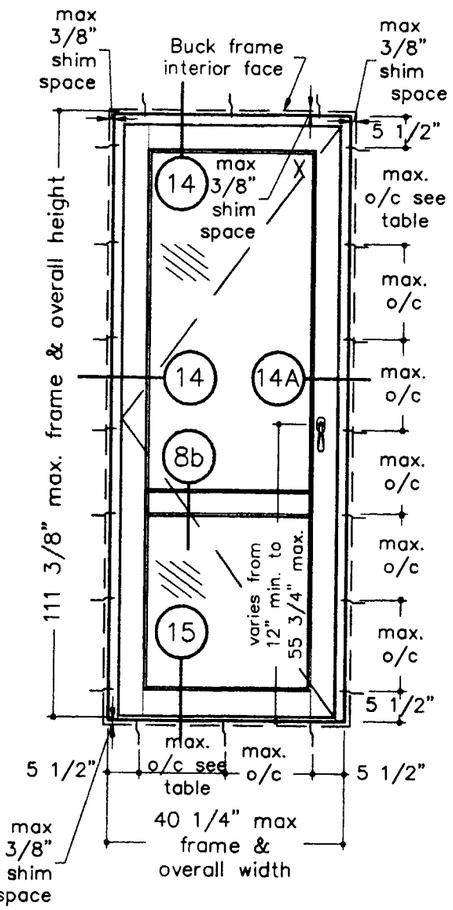

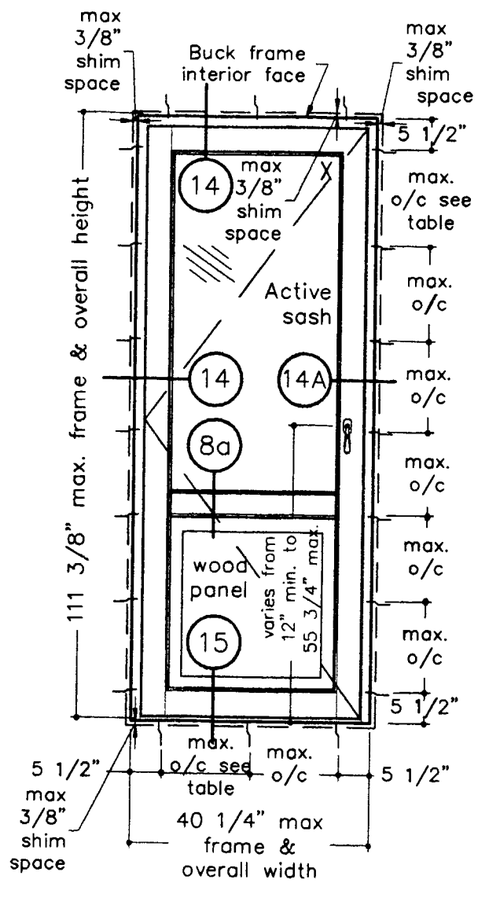

IN-SWING DOORS

CONFIGURATIONS: x, xx

VIEWED FROM THE OUTSIDE

WOOD: Mahogany

8a 8b ***Note: D.L.O. max. lenght @ Muntin bar must be less than 31 1/4"**

INSTALLATION DETAIL: 2 x PT WOOD BUCK

@head, jambs &sill detail:

Installation Bracket PDF-FS-05/D

Screwed to the buck frame using 1x #12 x 1 1/2" all threaded (a.T.)wood screws. Min. embedment is 1 1/4". Screwed to the window frame using 2x #10 x 1" a.T. wood screws. Min. embedment is 3/4".

Directly screwed:

@head, jambs &sill detail:

Screwed through the frame profile to the buck frame using #12 x 2 3/4" wood screws.
Min. embedment is 1 1/4".

INSTALLATION DETAIL: 1 x PT WOOD SHIM

@head, jambs &sill detail:

Installation Bracket PDF-FS-05/D

Screwed to the masonry using 1/4" x 2 1/2" Tapcon screws. Min. embedment is 1 1/4". Screwed to the window frame using 2x #10 x 1" wood screws. Min. embedment is 3/4".

Directly screwed:

@head, jambs &sill detail:

Directly screwed through the frame to the masonry using 1/4" x 4" Tapcon screws.
Min. embedment is 1 1/4".

Spacing: All fasteners spacing is 5 1/2" from corners. For Max. O/C, see table

Shim Space: 3/8" MAX. @ head, jambs & sill. Use std wood shims behind as required.

TYPE OF GLASS: SINGLE, LAMINATED

FOR D.L.O. AREA UP TO 19 sqf: 15/32" (O.T.) MADE OF 3/16"(AN)-0.090" Saflex III G* interlayer-3/16"(HS)

FOR D.L.O. AREA UP TO 22.48 sqf: 15/32" (O.T.) MADE OF 3/16"(HS)-0.090" Saflex III G* interlayer-3/16"(HS)

WP: 1 3/4" RAISED WOOD PANEL

MAX. D.L.O. AREA: 7.81 sqf

(*) Refer to page 14

DESIGN PRESSURE

Positive Pressure: +58 psf
Negative Pressure -68 psf

NOTE: All sizes noted are maximum sizes. Sizes smaller in width & height are permitted.

NOTE: This unit will not need a hurricane protective system.

MAX. HINGES SPACING

1488-03 steel hinges by Jardinier Massard secured with with 8 x #7 x 1" F.H. screws

Frame Height (in.) up to	Dist from corner	total Qty	Dist o/c (max)
39 1/2"	8"	2	20 9/16"
59"	8"	3	20 9/16"
79 1/2"	8"	4	20 9/16"
99 3/8"	8"	5	20 9/16"
111 3/8"	8"	5	23 3/8"

TABLE FOR MAX. DISTANCE (in.) BETWEEN BRACKET OR SCREW CONNECTIONS @JAMBS, HEAD OR SILL

Frame Width (in.) from - to	Max. Frame Height (in.) 60"	66"	72"	111 3/8"
0-60"	14"	14"	14"	14"
60-62"	14"	13"	13"	13"
62-68"	14"	13"	12"	12"
68-72"	14"	13"	11"	11"
72-77 3/16"	14"	13"	11"	11"

MQ WINDOWS OF EUROPE AND THE AMERICAS
1855 GRIFFIN ROAD, SUITE A-274
DANIA, FL 33004

JS SERIE INSWING & OUTSWING WOOD WINDOWS MIAMI DADE COUNTY

Drawing no.: MQJS-NOA3	
Scale: 1=20	Drawn by: S. Marcotte
Date drawn: 01/10/99	Date revised: 07/11/00
File: DJS-W9802	Page: 2/15

STRUCTURALLY REVIEWED BY:

TILLIT TESTING & ENGINEERING COMPANY INC.
TILLIT TESTING & ENGINEERING COMPANY
6595 NW 36th STREET, STE. 217
MIAMI, FLORIDA 33166
WALTER A. TILLIT JR., P.E.
STRUCTURAL ENGINEER
FL. LIC.NO. 44167

1/10/01

APPROVED AS COMPLYING WITH THE SOUTH FLORIDA BUILDING CODE
DATE February 08, 2001
BY Ishaq I. Chanda
PRODUCT CONTROL DIVISION
BUILDING CODE COMPLIANCE OFFICE
ACCEPTANCE NO. 99-1228.05

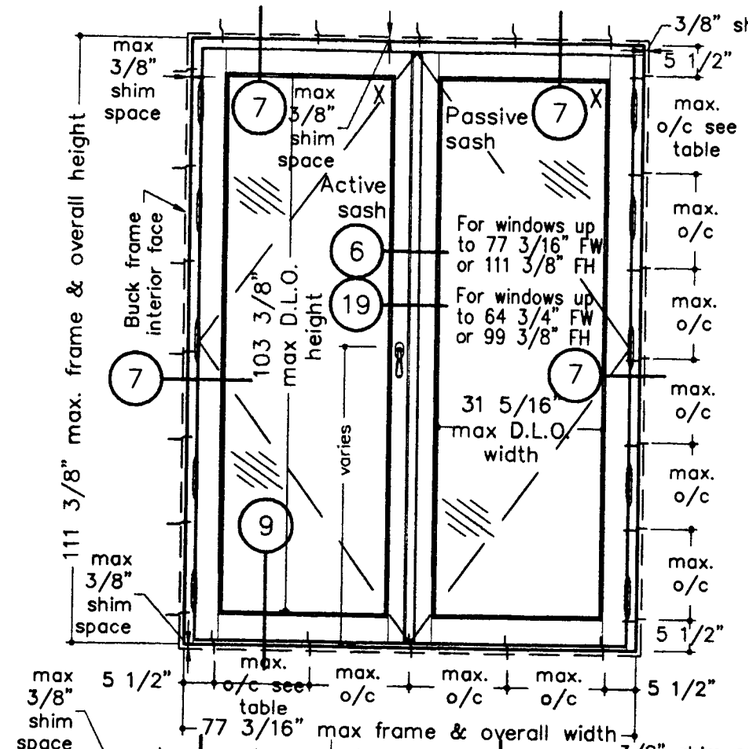

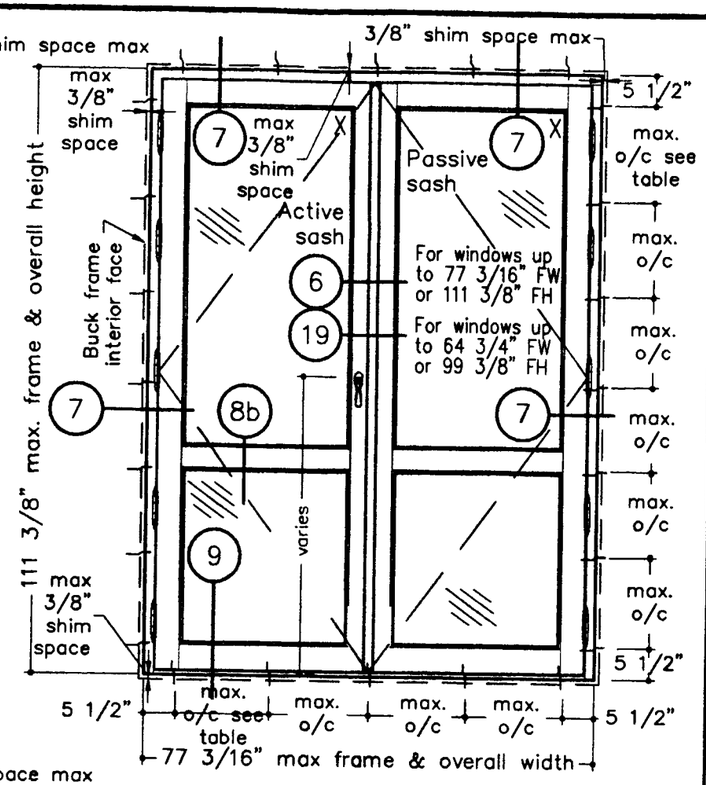

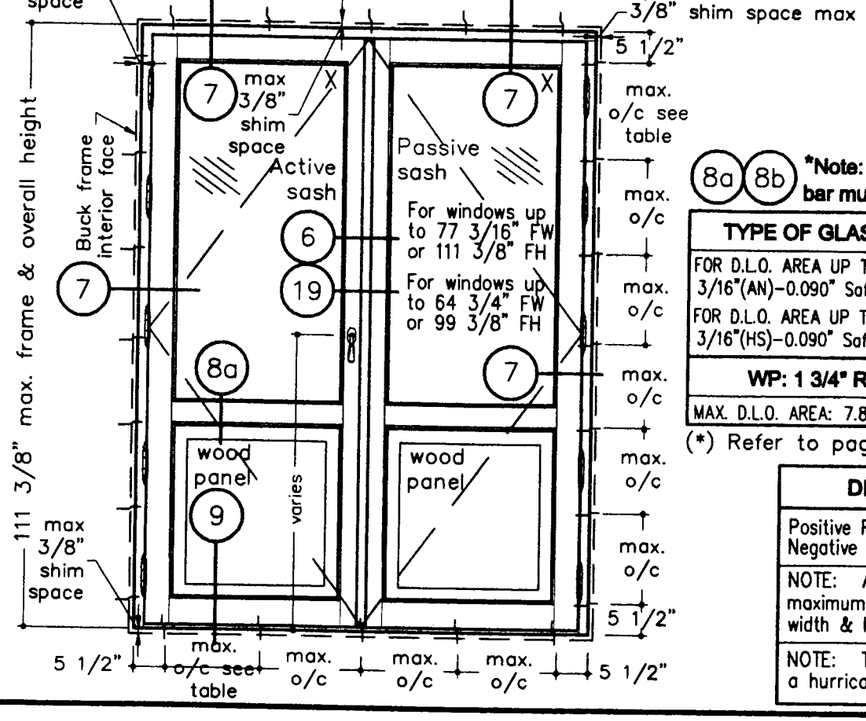

OUT-SWING WINDOWS

CONFIGURATIONS: x, xx

VIEWED FROM THE OUTSIDE

WOOD: Mahogany

(8a)(8b) ***Note: D.L.O. max. lenght @ Muntin bar must be less than 31 1/4"**

TYPE OF GLASS: SINGLE, LAMINATED
FOR D.L.O. AREA UP TO 19 sqf: 15/32" (O.T.) MADE OF 3/16"(AN)-0.090" Saflex III G* interlayer-3/16"(HS)
FOR D.L.O. AREA UP TO 22.48 sqf: 15/32" (O.T.) MADE OF 3/16"(HS)-0.090" Saflex III G* interlayer-3/16"(HS)
WP: 1 3/4" RAISED WOOD PANEL
MAX. D.L.O. AREA: 7.81 sqf

(*) Refer to page 14

DESIGN PRESSURE
Positive Pressure: +58 psf Negative Pressure -68 psf
NOTE: All sizes noted are maximum sizes. Sizes smaller in width & height are permitted.
NOTE: This unit will not need a hurricane protective system.

INSTALLATION DETAIL: 2 x PT WOOD BUCK

@head, jambs &sill detail:

— Installation Bracket PDF-FS-05/D

Screwed to the buck frame using 1x #12 x 1 1/2" all threaded (a.T.)wood screws. Min. embedment is 1 1/4". Screwed to the window frame using 2x #10 x 1" a.T. wood screws. Min. embedment is 3/4".

▷— **Directly screwed:**

@head, jambs &sill detail:

Screwed through the frame profile to the buck frame using #12 x 2 3/4" wood screws.
Min. embedment is 1 1/4".

INSTALLATION DETAIL: 1 x PT WOOD SHIM

@head, jambs &sill detail:

— Installation Bracket PDF-FS-05/D

Screwed to the masonry using 1/4" x 2 1/2" Tapcon screws. Min. embedment is 1 1/4". Screwed to the window frame using 2x #10 x 1" wood screws. Min. embedment is 3/4".

▷— **Directly screwed:**

@head, jambs &sill detail:

Directly screwed through the frame to the masonry using 1/4" x 4" Tapcon screws.
Min. embedment is 1 1/4".

Spacing: All fasteners spacing is 5 1/2" from corners. For Max. O/C, see table

Shim Space: 3/8" MAX. @ head, jambs & sill. Use std wood shims behind as required.

MAX. HINGES SPACING

1488-03 steel hinges by Jardinier Massard secured with with 8 x #7 x 1" F.H. screws

Frame Height (in.) up to	Dist from corner	total Qty	Dist o/c (max)
39 1/2"	8"	2	20 9/16"
59"	8"	3	20 9/16"
79 1/2"	8"	4	20 9/16"
99 3/8"	8"	5	20 9/16"
111 3/8"	8"	5	23 3/8"

TABLE FOR MAX. DISTANCE (in.) BETWEEN BRACKET OR SCREW CONNECTIONS @JAMBS, HEAD OR SILL

Frame Width (in.) from - to	Max. Frame Height (in.) 60"	66"	72"	111 3/8"
0-60"	14"	14"	14"	14"
60-62"	14"	13"	13"	13"
62-68"	14"	13"	12"	12"
68-72"	14"	13"	11"	11"
72-77 3/16"	14"	13"	11"	11"

MQ WINDOWS OF EUROPE AND THE AMERICAS
1855 GRIFFIN ROAD, SUITE A-274
DANIA, FL 33004

JS SERIE INSWING & OUTSWING WOOD WINDOWS MIAMI DADE COUNTY

Drawing no.: MQJS-N0A3	
Scale: 1=20	Drawn by: S. Marcotte
Date drawn: 01/10/99	Date revised: 07/11/00
File: DJS-W9803	Page: 3/15

STRUCTURALLY REVIEWED BY:

TILLIT TESTING & ENGINEERING COMPANY
6505 NW 36th STREET, STE. 217
MIAMI, FLORIDA 33166

WALTER A. TILLIT JR., P.E.
STRUCTURAL ENGINEER
FL. LIC.NO. 44167

4/10/01

APPROVED AS COMPLYING WITH THE SOUTH FLORIDA BUILDING CODE
DATE February 08, 2001
BY Ishaq I. Chanda
PRODUCT CONTROL DIVISION
BUILDING CODE COMPLIANCE OFFICE
ACCEPTANCE NO. 99-1228.05

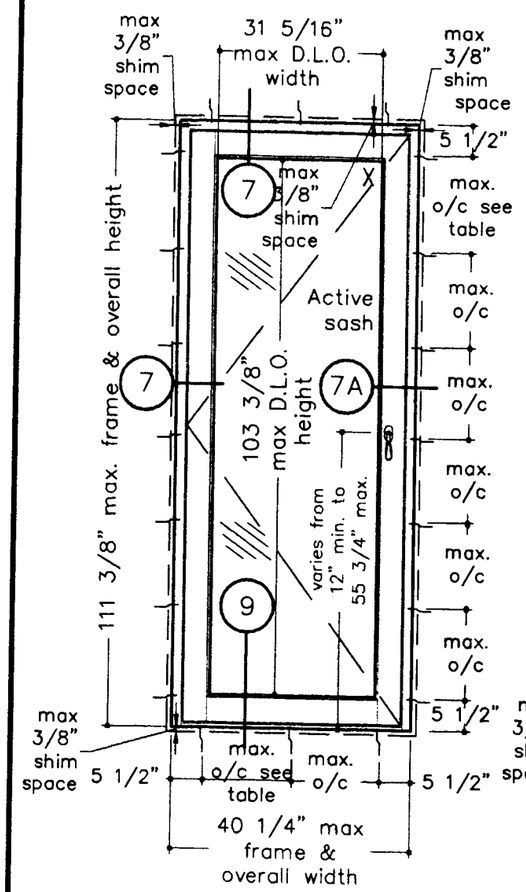

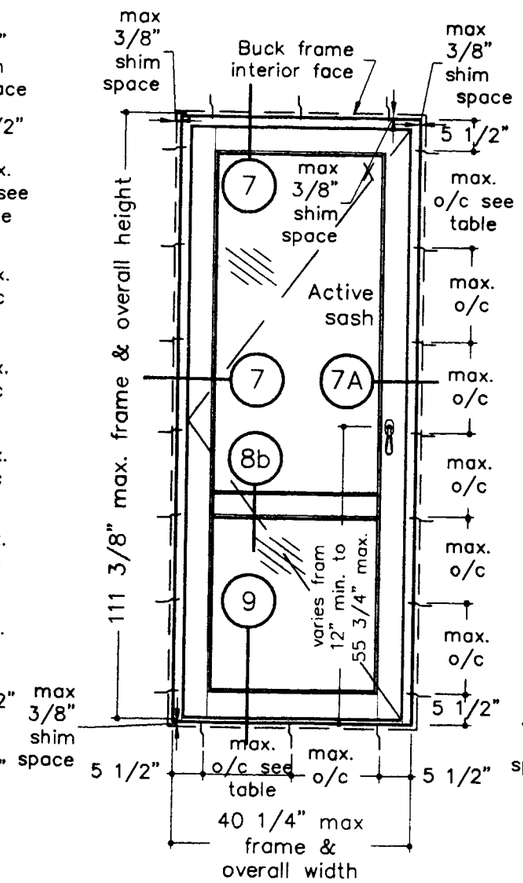

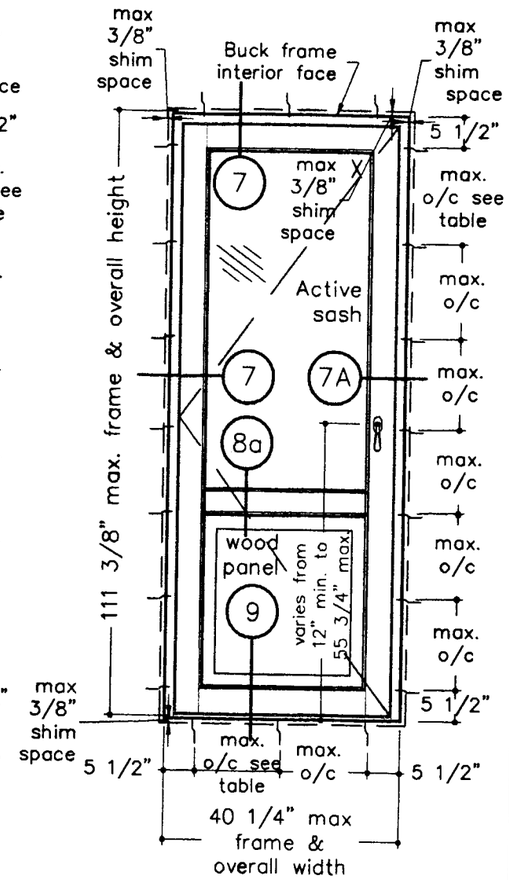

OUT-SWING WINDOWS
CONFIGURATIONS: x, xx

VIEWED FROM THE OUTSIDE
WOOD: Mahogany

INSTALLATION DETAIL: 2 x PT WOOD BUCK

@head, jambs &sill detail:
— Installation Bracket PDF-FS-05/D
Screwed to the buck frame using 1x #12 x 1 1/2" all threaded (a.T.)wood screws. Min. embedment is 1 1/4". Screwed to the window frame using 2x #10 x 1" a.T. wood screws. Min. embedment is 3/4".

Directly screwed:
@head, jambs &sill detail:
Screwed through the frame profile to the buck frame using #12 x 2 3/4" wood screws.
Min. embedment is 1 1/4".

INSTALLATION DETAIL: 1 x PT WOOD SHIM

@head, jambs &sill detail:
— Installation Bracket PDF-FS-05/D
Screwed to the masonry using 1/4" x 2 1/2" Tapcon screws. Min. embedment is 1 1/4". Screwed to the window frame using 2x #10 x 1" wood screws. Min. embedment is 3/4".

Directly screwed:
@head, jambs &sill detail:
Directly screwed through the frame to the masonry using 1/4" x 4" Tapcon screws.
Min. embedment is 1 1/4".

Spacing: All fasteners spacing is 5 1/2" from corners. For Max. O/C, see table

Shim Space: 3/8" MAX. @ head, jambs & sill. Use std wood shims behind as required.

8a 8b ***Note: D.L.O. max. lenght @ Muntin bar must be less than 31 1/4"**

TYPE OF GLASS: SINGLE, LAMINATED

FOR D.L.O. AREA UP TO 19 sqf: 15/32" (O.T.) MADE OF 3/16"(AN)-0.090" Saflex III G* interlayer-3/16"(HS)
FOR D.L.O. AREA UP TO 22.48 sqf: 15/32" (O.T.) MADE OF 3/16"(HS)-0.090" Saflex III G* interlayer-3/16"(HS)

WP: 1 3/4" RAISED WOOD PANEL

MAX. D.L.O. AREA: 7.81 sqf

(*) Refer to page 14

DESIGN PRESSURE

Positive Pressure: +58 psf
Negative Pressure -68 psf

NOTE: All sizes noted are maximum sizes. Sizes smaller in width & height are permitted.

NOTE: This unit will not need a hurricane protective system.

MAX. HINGES SPACING

1488-03 steel hinges by Jardinier Massard secured with with 8 x #7 x 1" F.H. screws

Frame Height (in.) up to	Dist from corner	total Qty	Dist o/c (max)
39 1/2"	8"	2	20 9/16"
59"	8"	3	20 9/16"
79 1/2"	8"	4	20 9/16"
99 3/8"	8"	5	20 9/16"
111 3/8"	8"	5	23 3/8"

TABLE FOR MAX. DISTANCE (in.) BETWEEN BRACKET OR SCREW CONNECTIONS @JAMBS, HEAD OR SILL

Frame Width (in.) from - to	Max. Frame Height (in.) 60"	66"	72"	111 3/8"
0-60"	14"	14"	14"	14"
60-62"	14"	13"	13"	13"
62-68"	14"	13"	12"	12"
68-72"	14"	13"	11"	11"
72-77 3/16"	14"	13"	11"	11"

MQ WINDOWS OF EUROPE AND THE AMERICAS
1855 GRIFFIN ROAD, SUITE A-274
DANIA, FL 33004

JS SERIE
INSWING & OUTSWING
WOOD WINDOWS
MIAMI DADE COUNTY

Drawing no.: MQJS-NOA3

Scale: 1=20	Drawn by: S. Marcotte
Date drawn: 01/10/99	Date revised: 07/11/00
File: DJS-W9804	Page: 4/15

STRUCTURALLY REVIEWED BY:

TILLIT TESTING & ENGINEERING COMPANY
6595 NW 36th STREET, STE. 217
MIAMI, FLORIDA 33166
WALTER A. TILLIT JR., P.E.
STRUCTURAL ENGINEER
FL. LIC.NO. 44167

1/10/01

APPROVED AS COMPLYING WITH THE SOUTH FLORIDA BUILDING CODE
DATE February 08, 2001
BY Ishaq I. Chanda
PRODUCT CONTROL DIVISION
BUILDING CODE COMPLIANCE OFFICE
ACCEPTANCE NO. 99-1228.05

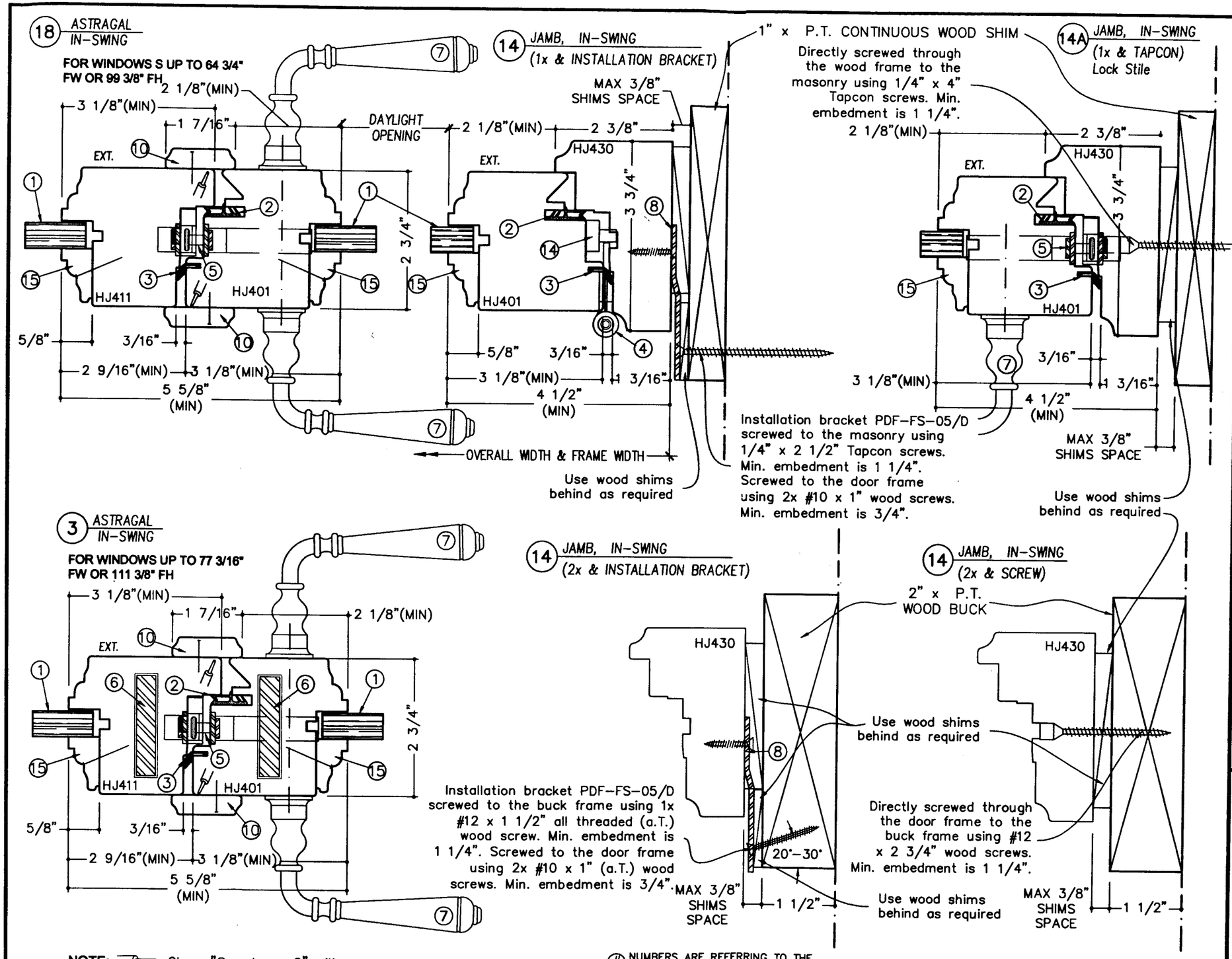

NOTE: Clear "Spectrem 2" silicone sealant at shown interfaces

(#) NUMBERS ARE REFERRING TO THE ASSEMBLY LISTS ON PAGES 9 TO 15

MQ WINDOWS OF EUROPE AND THE AMERICAS
1855 GRIFFIN ROAD, SUITE A-274
DANIA, FL 33004

JS SERIE INSWING & OUTSWING WOOD WINDOWS MIAMI DADE COUNTY

Drawing no.: MQJS-N0A3	
Scale: 1=2	Drawn by: S. Marcotte
Date drawn: 01/10/99	Date revised: 07/11/00
File: DJS-W9805	Page: 5/15

STRUCTURALLY REVIEWED BY:

TILLIT TESTING & ENGINEERING COMPANY
6595 NW 36th STREET, STE. 217
MIAMI, FLORIDA 33166
WALTER A. TILLIT JR., P.E.
STRUCTURAL ENGINEER
FL. LIC.NO. 44167

1/10/01

APPROVED AS COMPLYING WITH THE SOUTH FLORIDA BUILDING CODE
DATE February 08, 2001
BY Ishaq I. Chanda
PRODUCT CONTROL DIVISION
BUILDING CODE COMPLIANCE OFFICE
ACCEPTANCE NO. 99-1228.05

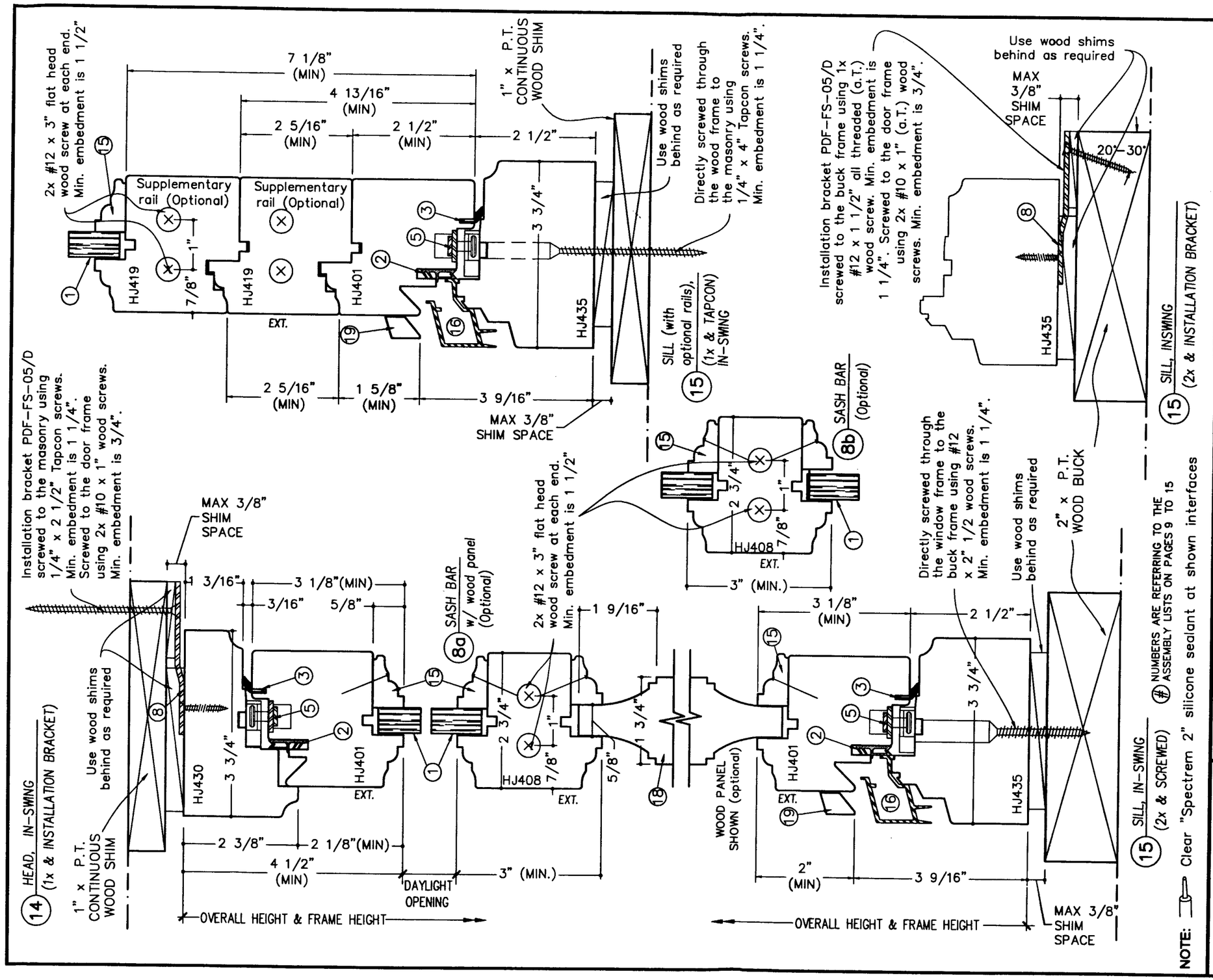

MQ WINDOWS OF EUROPE AND THE AMERICAS

1855 GRIFFIN ROAD, SUITE A-274 DANIA, FL 33004

JS SERIE
INSWING & OUTSWING
WOOD WINDOWS
MIAMI DADE COUNTY

Drawing no.: MQJS-N0A3	
Scale: 1=2	Drawn by: S. Marcotte
Date drawn: 01/10/99	Date revised: 07/11/00
File: DJS-W9806	Page: 6/15

STRUCTURALLY REVIEWED BY:

TILLIT TESTING & ENGINEERING COMPANY
6595 NW 36th STREET, STE. 217
MIAMI, FLORIDA 33166
WALTER A. TILLIT JR., P.E.
STRUCTURAL ENGINEER
FL. LIC.NO. 44167

1/19/01

APPROVED AS COMPLYING WITH THE SOUTH FLORIDA BUILDING CODE
DATE February 08, 2001
BY Ishaq I. Chanda
PRODUCT CONTROL DIVISION
BUILDING CODE COMPLIANCE OFFICE
ACCEPTANCE NO 99-1228.05

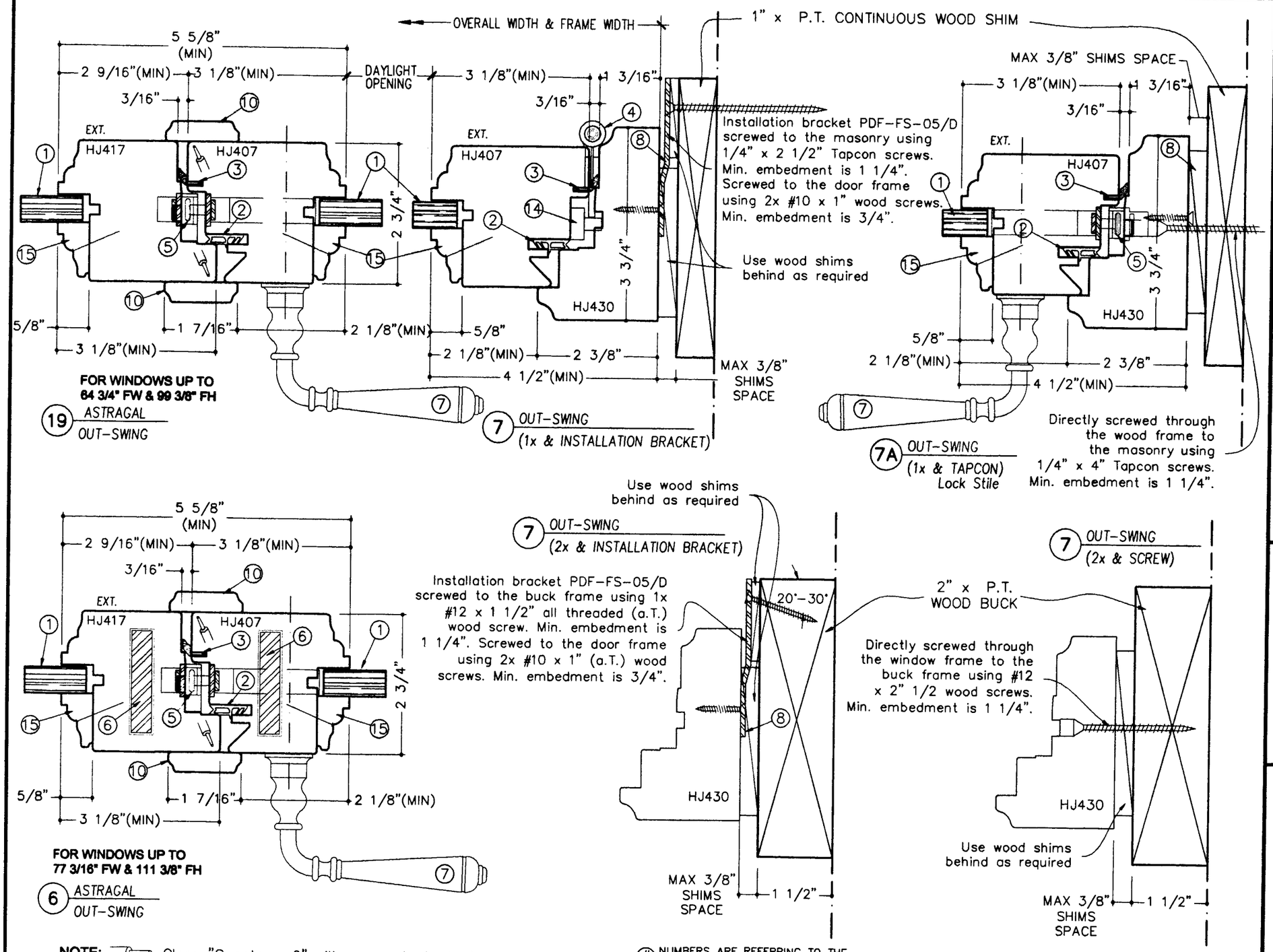

NOTE: Clear "Spectrem 2" silicone sealant at shown interfaces

(#) NUMBERS ARE REFERRING TO THE ASSEMBLY LISTS ON PAGES 9 TO 15

MQ WINDOWS OF EUROPE AND THE AMERICAS
1855 GRIFFIN ROAD, SUITE A-274
DANIA, FL 33004

JS SERIE INSWING & OUTSWING WOOD WINDOWS MIAMI DADE COUNTY

Drawing no.: MQJS-NOA3	
Scale: 1=2	Drawn by: S. Marcotte
Date drawn: 01/10/99	Date revised: 07/11/00
File: DJS-W9807	Page: 7/15

STRUCTURALLY REVIEWED BY:

TILLIT TESTING & ENGINEERING COMPANY
6595 NW 36th STREET, STE. 217
MIAMI, FLORIDA 33166
WALTER A. TILLIT JR., P.E.
STRUCTURAL ENGINEER
FL. LIC.NO. 44167

7/13/01

APPROVED AS COMPLYING WITH THE SOUTH FLORIDA BUILDING CODE
DATE February 08, 2001
BY Ishaq I. Chanda
PRODUCT CONTROL DIVISION
BUILDING CODE COMPLIANCE OFFICE
ACCEPTANCE NO. 99-1228.05

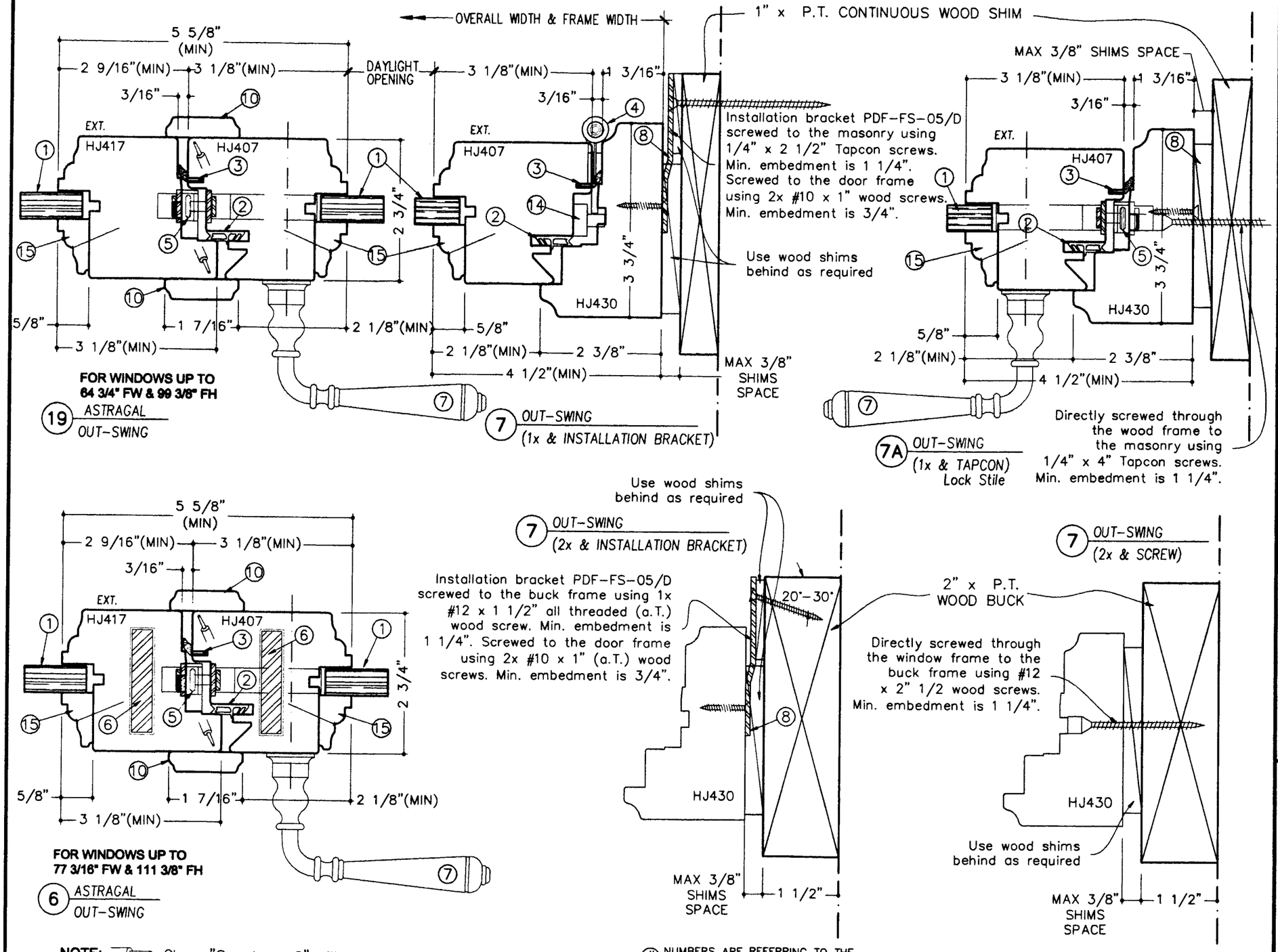

NOTE: Clear "Spectrem 2" silicone sealant at shown interfaces

(#) NUMBERS ARE REFERRING TO THE ASSEMBLY LISTS ON PAGES 9 TO 15

MQ WINDOWS OF EUROPE AND THE AMERICAS
1855 GRIFFIN ROAD, SUITE A-274
DANIA, FL 33004

JS SERIE INSWING & OUTSWING WOOD WINDOWS MIAMI DADE COUNTY

Drawing no.: MQJS-NOA3	
Scale: 1=2	Drawn by: S. Marcotte
Date drawn: 01/10/99	Date revised: 07/11/00
File: DJS-W9807	Page: 7/15

STRUCTURALLY REVIEWED BY:

TILLIT TESTING & ENGINEERING COMPANY
6595 NW 36th STREET, STE. 217
MIAMI, FLORIDA 33166
WALTER A. TILLIT JR., P.E.
STRUCTURAL ENGINEER
FL. LIC.NO. 44167

7/10/01

APPROVED AS COMPLYING WITH THE SOUTH FLORIDA BUILDING CODE
DATE February 08, 2001
BY Ishaq I. Chanda
PRODUCT CONTROL DIVISION
BUILDING CODE COMPLIANCE OFFICE
ACCEPTANCE NO. 99-1228.05

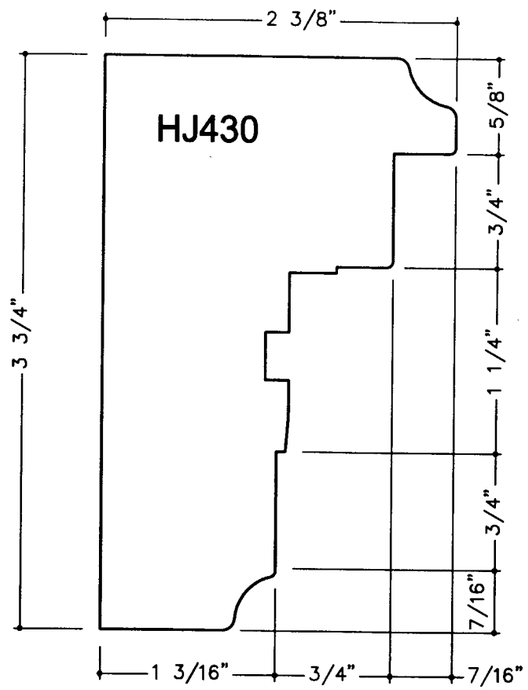

OPEN IN: FRAME @ HEAD & JAMBS;
OPEN OUT: FRAME @ HEAD, JAMBS & SILL

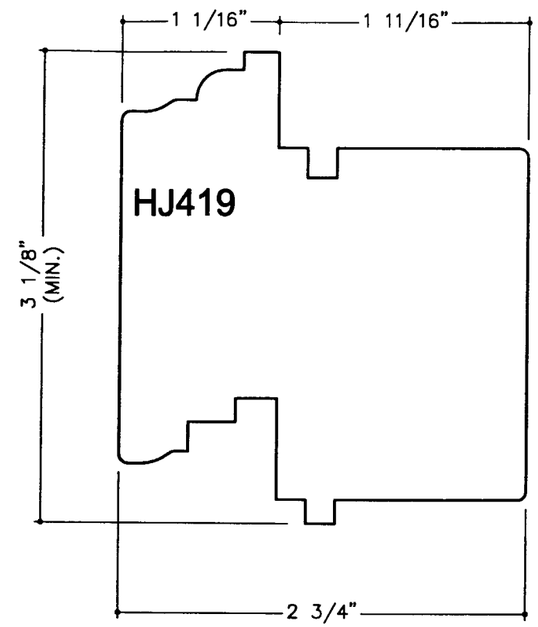

SUPPLEMENTARY RAIL (optional)
OPEN IN OR OUT

WOOD PROFILES

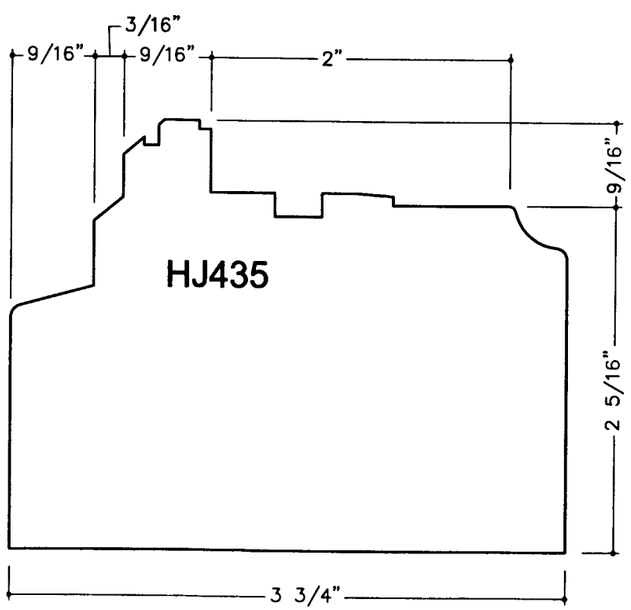

FRAME SILL, OPEN IN

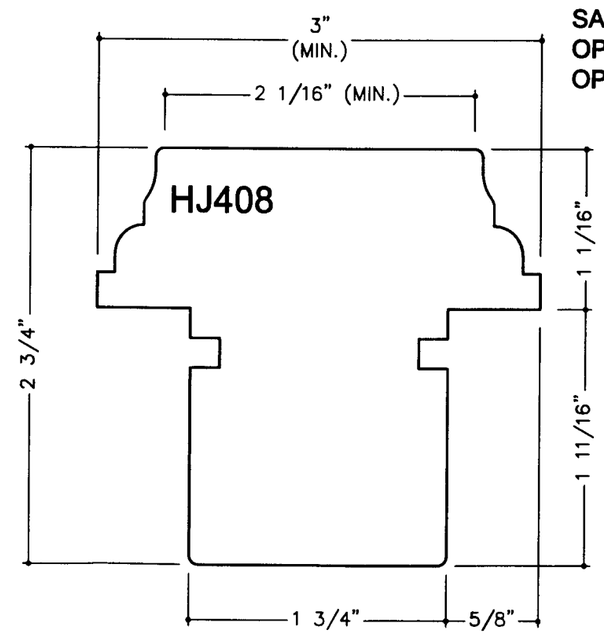

SASH BAR (optional)
OPEN IN OR
OPEN OUT

MQ WINDOWS OF EUROPE AND THE AMERICAS
1855 GRIFFIN ROAD, SUITE A-274
DANIA, FL 33004

JS SERIE
INSWING & OUTSWING
WOOD WINDOWS
MIAMI DADE COUNTY

Drawing no.: MQJS-NOA3	
Scale: 1=1	Drawn by: S. Marcotte
Date drawn: 01/10/99	Date revised: 07/11/00
File: DJS-W9809	Page: 9/15

STRUCTURALLY REVIEWED BY:
TILLIT TESTING & ENGINEERING COMPANY
6595 NW 36th STREET, STE. 217
MIAMI, FLORIDA 33166
WALTER A. TILLIT JR., P.E.
STRUCTURAL ENGINEER
FL. LIC.NO. 44167
1/10/01

APPROVED AS COMPLYING WITH THE SOUTH FLORIDA BUILDING CODE
DATE February 09, 2001
BY Ishaq I. Chanda
PRODUCT CONTROL DIVISION
BUILDING CODE COMPLIANCE OFFICE
ACCEPTANCE NO. 99-1228.05

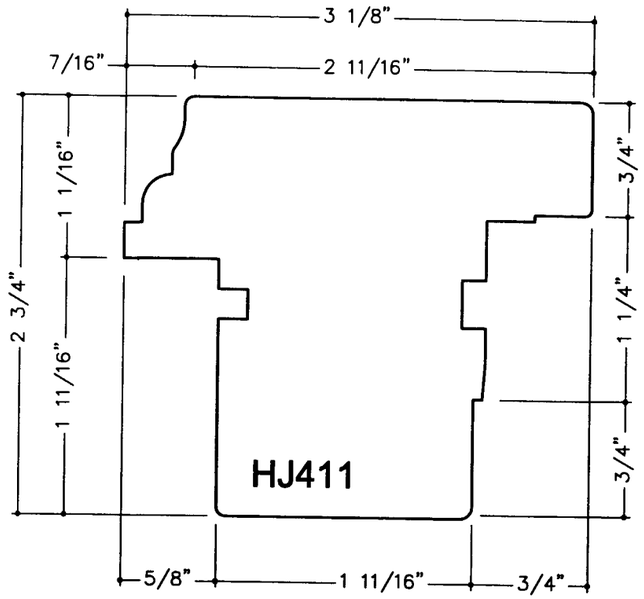

SASH PROFILE,
OPEN IN.
INACTIVE SASH:
@ Astragal Stile.

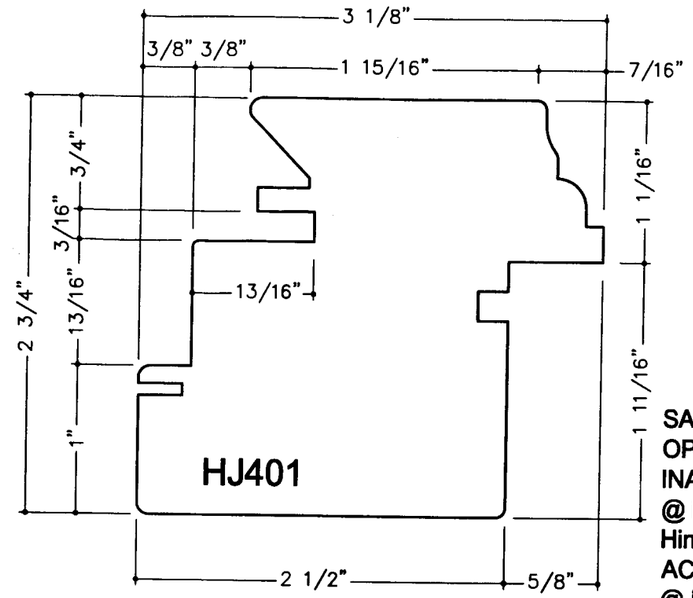

SASH PROFILE,
OPEN IN.
INACTIVE SASH:
@ Head, Sill &
Hinged Stile.
ACTIVE SASH:
@ Head, Sill &
Jambs.

WOOD PROFILES

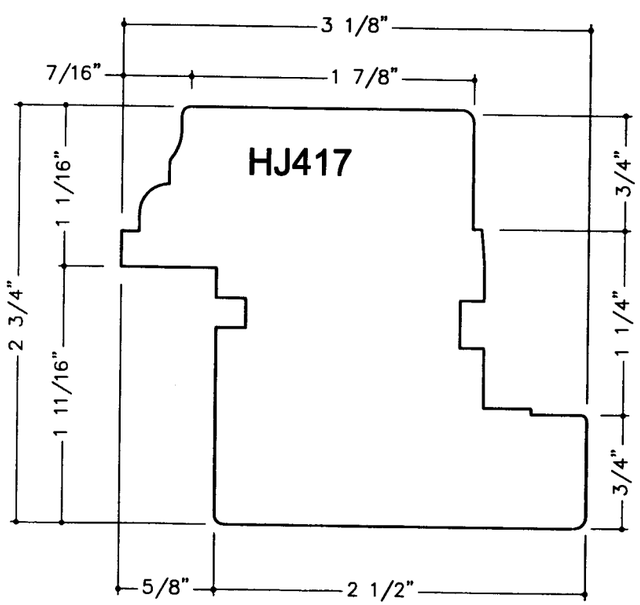

SASH PROFILE,
OPEN OUT.
INACTIVE SASH:
@ Astragal Stile.

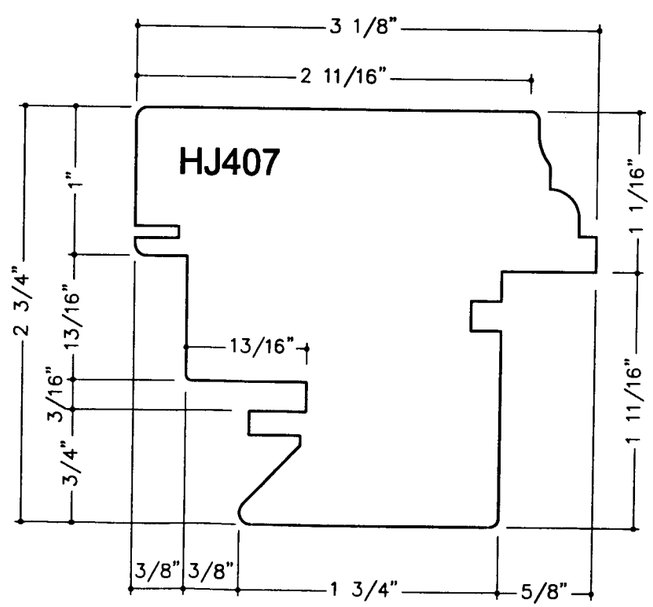

SASH PROFILE,
OPEN OUT.
INACTIVE SASH:
@ Head, Sill &
Hinged Stile.
ACTIVE SASH:
@ Head, Sill &
Jambs.

MQ WINDOWS OF EUROPE AND THE AMERICAS
1855 GRIFFIN ROAD,
SUITE A-274
DANIA, FL 33004

JS SERIE
INSWING & OUTSWING
WOOD WINDOWS
MIAMI DADE COUNTY

Drawing no.: MQJS-NOA3	
Scale: 1=1	Drawn by: S. Marcotte
Date drawn: 01/10/99	Date revised: 07/11/00
File: DJS-W9810	Page: 10/15

STRUCTURALLY REVIEWED BY:

TILLIT TESTING & ENGINEERING COMPANY
6595 NW 36th STREET, STE. 217
MIAMI, FLORIDA 33166
WALTER A. TILLIT JR., P.E.
STRUCTURAL ENGINEER
FL. LIC.NO. 44167

1/19/01

APPROVED AS COMPLYING WITH THE
SOUTH FLORIDA BUILDING CODE
DATE February 08, 2001
BY Shag L. Chanda
PRODUCT CONTROL DIVISION
BUILDING CODE COMPLIANCE OFFICE
ACCEPTANCE NO. 99-1228.05

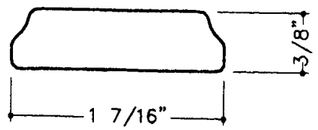

(10) **ZJ142**
ASTRAGAL MOULDING

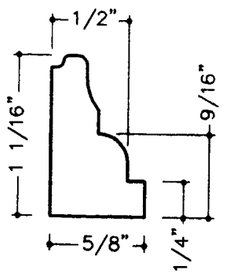

(15) **GJ064**
GLAZING BEAD

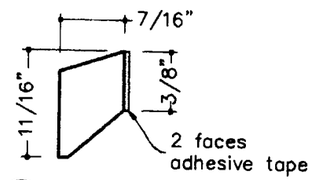

(19) **ZT130**
SASH WATER DRIP

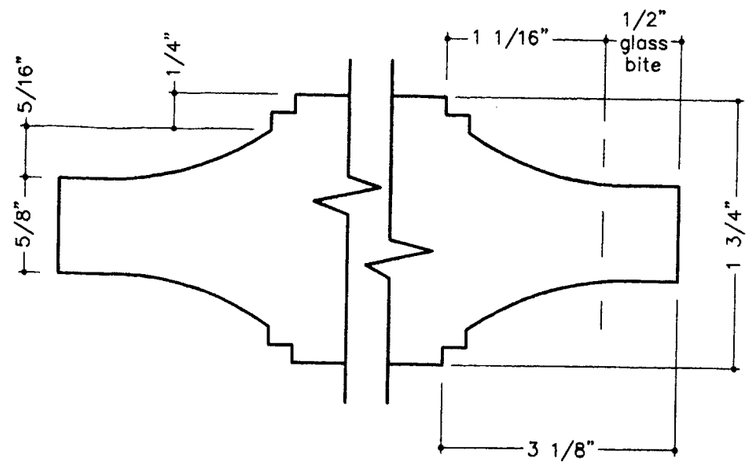

(18) **PT001**
RAISED WOOD PANEL

WOOD MOULDINGS

MQ WINDOWS OF EUROPE AND THE AMERICAS
1855 GRIFFIN ROAD,
SUITE A-274
DANIA, FL 33004

JS SERIE
INSWING & OUTSWING
WOOD WINDOWS
MIAMI DADE COUNTY

Drawing no.: MQJS-NOA3	
Scale: 1=1	Drawn by: S. Marcotte
Date drawn: 01/10/99	Date revised: 07/11/00
File: DJS-W9811	Page: 11/15

STRUCTURALLY REVIEWED BY:

TILLIT TESTING & ENGINEERING COMPANY
6505 NW 36th STREET, STE. 217
MIAMI, FLORIDA 33166
WALTER A. TILLIT JR., P.E.
STRUCTURAL ENGINEER
FL. LIC.NO. 44167

4/2/01

BILL OF MATERIALS (see also related cross sections details)

REF.	QTY	Component	DESCRIPTION	MATERIAL	DIMENSIONS	MEAN OF ATTACHMENT	LOCATION
(10)	2 per astragal meeting	Astragal moulding	ZJ142 astragal wood cover. Square cut at the ends.	Mahogany	3/8"(d) x 1 7/16"(w) x sash height	18 gauge, 5/8" galvanized finishing nails spaced 16" o/c.	IN-SWING: One nailed on the interior face of the active sash & one nailed on the exterior face of the passive sash. OUT-SWING: One nailed on the interior face of the passive sash & one nailed on the exterior face of the active sash.
(15)	1 per glass edge	Glazing bead	GJ064 wood profile, mitre cut at corners.	Mahogany	1 1/2"(d) x 1 13/16"(w) x mullion lenght	18 gauge, 1" finishing nails spaced 2" from the corners and 10" o/c	@ the perimeter of the glass or wood panel; Nailed through the glazing bead to the sash profile. SEE ALSO "GLAZING METHOD"
(18)	One panel, where specified	Wood panel	Raised wood panel: 5/8"(t) @ flanges, 1 3/4"(t) @ center.	Mahogany	1" wider & higher than glass opening.	Dow Corning 995 structural silicone at the perimeter; See "Glazing Method".	Where indicated as "WOOD PANEL" on elevations drawings.
(19)	1 per sash, open in	Sash water drip	ZT130 Wood moulding. Square cut at the ends	Mahogany	7/16"(d) x 11/16"(w)	18 gauge, 1" finishing nails spaced 2" from the corners and 10" o/c	INSIDE OPENING ONLY: Nailed against the exterior face of the bottom rail of the operable sashes; a double face adhesive tape is used in between.

(#) REF. NUMBERS ARE RELATED TO THOSE USED ON CROSS SECTIONS DRAWINGS

APPROVED AS COMPLYING WITH THE SOUTH FLORIDA BUILDING CODE
DATE February 08, 2001
BY Ishaq I. Chanda
PRODUCT CONTROL DIVISION
BUILDING CODE COMPLIANCE OFFICE
ACCEPTANCE NO 99-1228.05

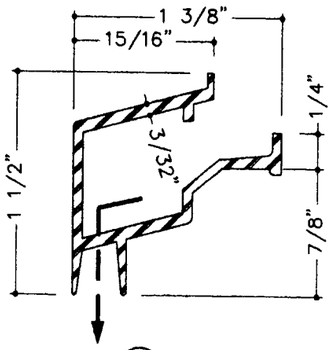

(16) **FS15S**
ALUMINUM RAINGUARD

NOTE: WEEPHOLES
@ 4-3/4" o/c,
5/32"(W) x 1" (L)

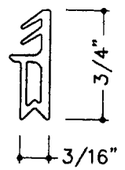

(2) **L5150**
MIDDLE GASKET

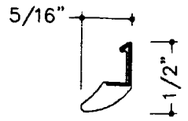

(3) **QWS250**
GASKET

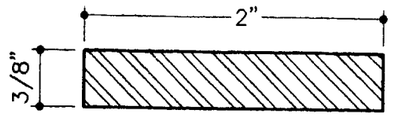

(6) **AI1050**
GALVANIZED STEEL FLAT BAR
AISI 1020, COLD DRAWN,
YIELD POINT 47,000 psi

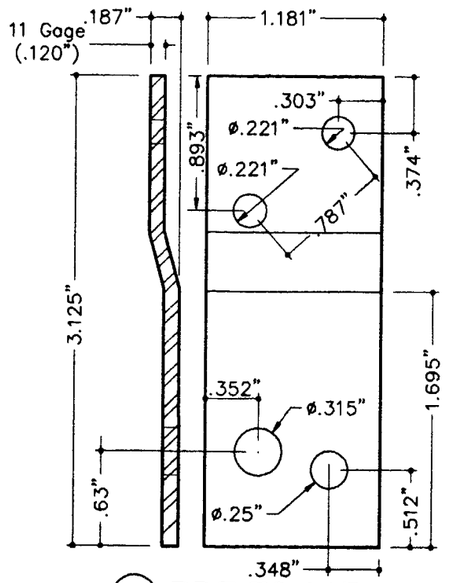

(8) **PDF-FS-05/D (revised 07/11/00)**
INSTALLATION BRACKET
Gage 11 ASTM A653 SQ 33
G90 galvanized steel

ACCESSORIES

BILL OF MATERIALS (see also related cross sections details)

REF.	QTY	Component	DESCRIPTION	MATERIAL	DIMENSIONS	MEAN OF ATTACHMENT	LOCATION
(2)	LF depends on sash perimeter	Middle gasket	Brügman L5150, Push-in middle gasket; mitre cut @ corners	EPDM	3/16"(d) x 3/4"(h)	Push-in gasket, in a continuous groove around the sash.	Perimeter of the active & fixed sashes; Head, bottom & hinged stile of inactive sash.
(3)	LF depends on sash perimeter	Gasket	Schlegel QWS250 foam gasket, mitre cut @ corners.	Polyure-thane foam	5/16"(d) x 1/2"(h)	Push-in gasket, in a continuous groove around the sash.	Perimeter of the active & fixed sashes; Head, bottom & hinged stile of inactive sash.
(6)	2 per astragal	Reinfor-cement	AI1050, Galvanized Steel AISI C1020, Cold drawn	Steel	3/8"(t) x 2"(d)	1/4" x 1" steel bolt, @ 9" from the bottom of the steel and @ 14" o/c.	@ handle stile of an astragal meeting (inactive or active sash), for sash height greater than 97 9/16" Steel lenght is 12" less than the sash height.
(8)	Depends on frame perim.	Instal-lation	PDF-FS-05/D Installation bracket Gage 11 ASTM A653 SQ 33 G90 galvanized steel	Galv. Steel	1.181"(w) x 3.125"(h) x 11g(t)	To door frame: 2x #10 x 1" wood screws. Min.embedment is 3/4" To structure: See instal-lation notes pages 1-4	Around the frame perimeter, @ 5 1/2" from corners; For the max. distance on center (o/c), see table pages 1-4
(16)	1 per wood sill, open in	Rainguard	FS15S profile, weep holes @ 4-3/4" o/c, 5/32"(W) x 1" (L)	Aluminum alloy 6063-T5	1 1/2"(h) x 1 3/8"(d) x 3/32"(t)	#8 x 3/4" round head wood screws, spaced 9 1/4" o/c.	At the top of the frame sill no. HJ435; INSIDE OPENING ONLY. Butt joint against the frame jambs at both ends.

(#) REF. NUMBERS ARE RELATED TO THOSE USED ON CROSS SECTIONS DRAWINGS

MQ WINDOWS OF EUROPE AND THE AMERICAS
1855 GRIFFIN ROAD,
SUITE A-274
DANIA, FL 33004

JS SERIE
INSWING & OUTSWING
WOOD WINDOWS
MIAMI DADE COUNTY

Drawing no.: MQJS-NOA3	
Scale: 1=1	Drawn by: S. Marcotte
Date drawn: 01/10/99	Date revised: 07/11/00
File: DJS-W9812	Page: 12/15

STRUCTURALLY REVIEWED BY:

TILLIT TESTING & ENGINEERING COMPANY
6595 NW 36th STREET, STE. 217
MIAMI, FLORIDA 33166
WALTER A. TILLIT JR., P.E.
STRUCTURAL ENGINEER
FL. LIC.NO. 44167

4/19/01

APPROVED AS COMPLYING WITH THE
SOUTH FLORIDA BUILDING CODE
DATE February 08, 2001
BY Ishaq I. Chanda
PRODUCT CONTROL DIVISION
BUILDING CODE COMPLIANCE OFFICE
ACCEPTANCE NO. 99-1228.05

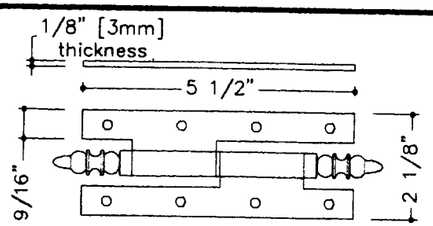

④ **1488-03**

HINGE (180° opening shown)

MAX. HINGES SPACING

1488-03 steel hinges by Jardinier Massard secured with with 8 x #7 x 1" F.H. screws

Frame Height (in.) up to	Dist from corner	total Qty	Dist o/c (max)
39 1/2"	8"	2	20 9/16"
59"	8"	3	20 9/16"
79 1/2"	8"	4	20 9/16"
99 3/8"	8"	5	20 9/16"
111 3/8"	8"	5	23 3/8"

BILL OF MATERIALS (76 3/4"w x 111 3/8"h FRAME)

REF.	QTY	DESCRIPTION	MATERIAL	LOCATION
④	10	Jardinier Massard S.A. 1488-03 hinges	Steel	8" from sash corners; for qty and max. o/c spacing see table.
⑦	1	Lever type handle	Steel	Interior side of active sash, centered
5a	18	Ferco keepers 6-27522	Bi-Chromated steel	On frame, 3 @top rail, 3 @bottom rail per operable sashes; 6 on inactive sash stile
5b	4	End extension arms (1 strike) 6-27460	Bi-Chromated steel	On sash, 1 @top rail, 1 @bottom rail per operable sashes.
5c	8	Ferco intermediate arms (1 strike) 6-26295	Bi-Chromated steel	On sash, 1 @top rail, 1 @bottom rail per operable sashes; 4 on active stile.
5d	2	Ferco corner gears (1 strike) 6-28163	Bi-Chromated steel	On inactive sash, 1 @top rail, 1 @bottom rail.
5e	2	Ferco corner gears (2 strikes) 6-27459	Bi-Chromated steel	Active sash, 1 @top rail, 1 @bottom rail.
5f	1	Ferco 40 mm backset mechanism 6-25485	Bi-Chromated steel	Active sash, @center of the handled stile
5g	1	Ferco hidden flat handle 6-24975	Bi-Chromated steel	On inactive sash, @13" from bottom rail.
14a	10	#9-32833 Snubbers	Steel	Sash side, 5 per stiles, same as hinges
14b	10	Snubber's strike plate	1/8" x 1/2" x 2" Steel plate	Frame side, 5 per stiles, same as hinges

REF. NUMBERS ARE RELATED TO THOSE USED ON CROSS SECTIONS DRAWINGS

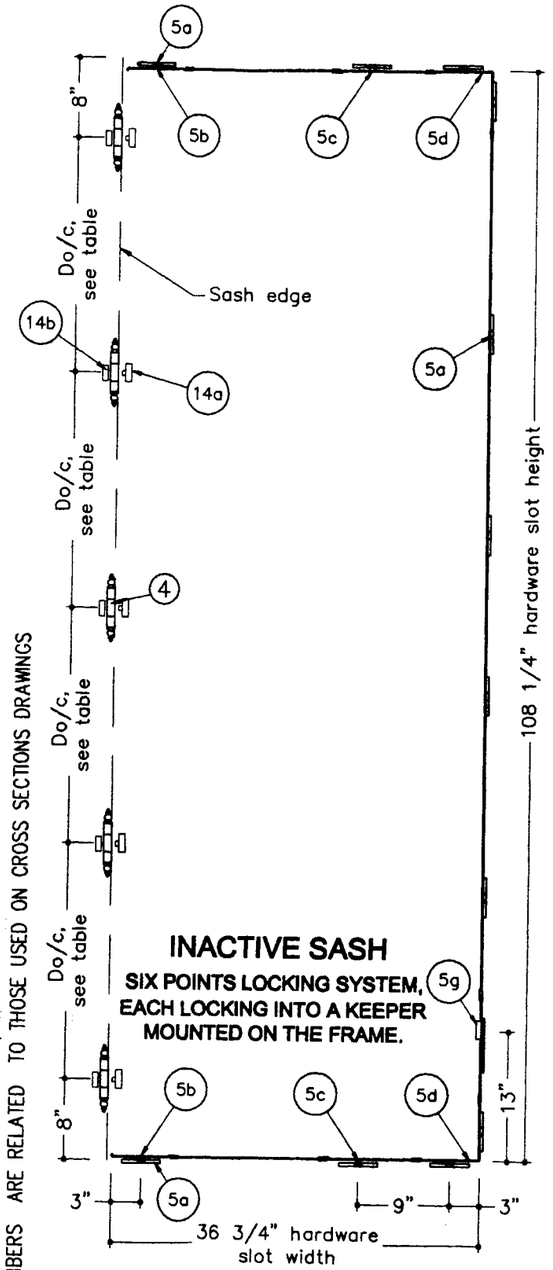

INACTIVE SASH

SIX POINTS LOCKING SYSTEM, EACH LOCKING INTO A KEEPER MOUNTED ON THE FRAME.

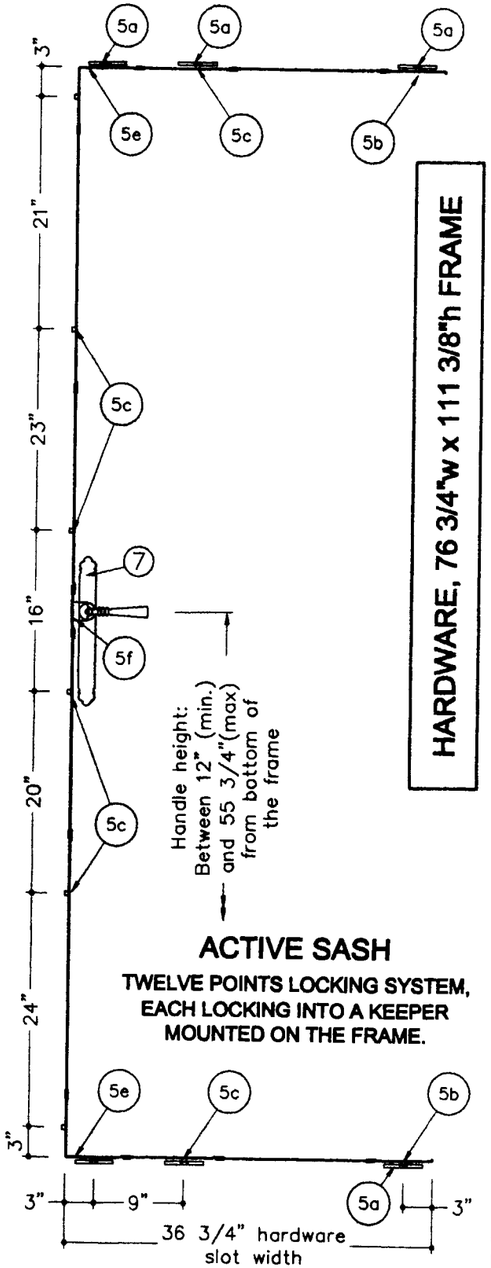

ACTIVE SASH

TWELVE POINTS LOCKING SYSTEM, EACH LOCKING INTO A KEEPER MOUNTED ON THE FRAME.

HARDWARE, 76 3/4"w x 111 3/8"h FRAME

MQ WINDOWS OF EUROPE AND THE AMERICAS
1855 GRIFFIN ROAD, SUITE A-274
DANIA, FL 33004

JS SERIE
INSWING & OUTSWING
WOOD WINDOWS
MIAMI DADE COUNTY

Drawing no.: MQJS-NOA3	
Scale: none	Drawn by: S. Marcotte
Date drawn: 01/10/99	Date revised: 07/11/00
File: DJS-W9813	Page: 13/15

STRUCTURALLY REVIEWED BY:

TILLIT TESTING & ENGINEERING COMPANY
6595 NW 36th STREET, STE. 217
MIAMI, FLORIDA 33166
WALTER A. TILLIT JR., P.E.
STRUCTURAL ENGINEER
FL. LIC.NO. 44167

1/10/01

APPROVED AS COMPLYING WITH THE SOUTH FLORIDA BUILDING CODE
DATE February 08, 2001
BY Ishaq I. Chanda
PRODUCT CONTROL DIVISION
BUILDING CODE COMPLIANCE OFFICE
ACCEPTANCE NO. 99-1228.05

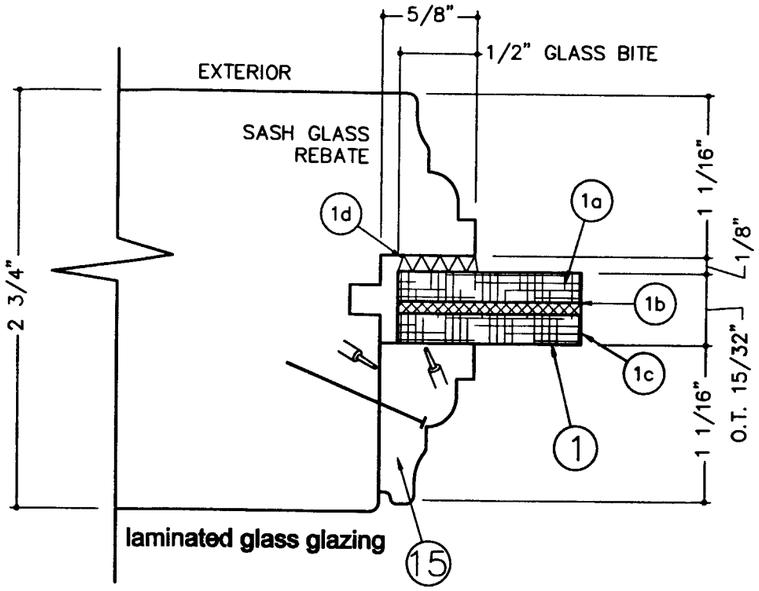

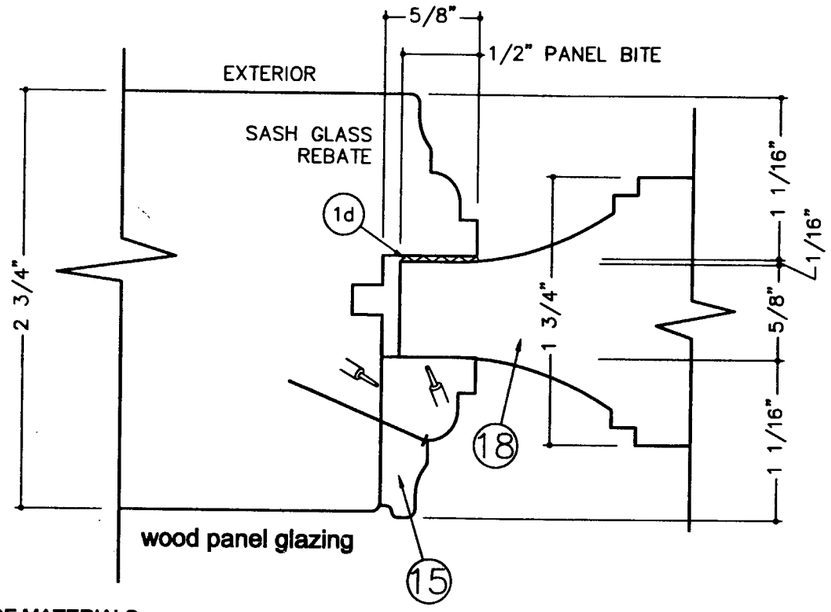

GLAZING METHOD (inside glazed)

BILL OF MATERIALS

REF.	Component	DESCRIPTION	MEAN OF ATTACHMENT	LOCATION
1	Impact Glass, see components 1a, 1b, 1c	15/32" (t) Laminated glass	See components 1d, and 15	As indicated on elevations drawings by the symbol.
1a	Glass sheet	3/16" (t) (5mm) as following: >Annealed glass for d.l.o. area up to 19 sqf >Heat strengthened glass for d.l.o. area up to 22.48 sqf	See components 1b: PVB interlayer	Exterior side
1b	SAFLEX III G interlayer	Solutia 0.090" (t) PVB plastic film, per current approval	2 sides adhesive film	Between the interior and the exterior sheets of glass
1c	Glass sheet	3/16" (t) (5mm) heat strengthened glass	See components 1b: PVB interlayer	Interior side (glazing bead side)
1d	Structural silicone	Dow Corning 995 black silicone	1/8"(t) x 1/2"(w) bonding extrusion	Continuous extrusion between the wood back fence & the exterior sheet edge of the laminated glass or wood panel.
15	Glazing bead	GJ064 wood profile (5/8"(t) x 1 1/16"(d)	18 gauge, 1" finishing nails spaced 2" from the corners and 10" o/c	@ the perimeter of the glass.
18	Wood panel	Mahogany, raised: 5/8"(t) @ flanges, 1 3/4"(t) @ center; Max. d.l.o. area up to 7.81 sqf	See components 1d, and 15	As indicated on elevation drawings.

Clear "Spectrem 2" silicone seallant at shown interfaces

(#) REF. NUMBERS ARE RELATED TO THOSE USED ON CROSS SECTIONS DRAWINGS

MQ WINDOWS OF EUROPE AND THE AMERICAS
1855 GRIFFIN ROAD, SUITE A-274
DANIA, FL 33004

JS SERIE
INSWING & OUTSWING
WOOD WINDOWS
MIAMI DADE COUNTY

Drawing no.: MQJS-NOA3

Scale: 1=20	Drawn by: S. Marcotte
Date drawn: 01/10/99	Date revised: 07/11/00
File: DJS-W9814	Page: 14/15

STRUCTURALLY REVIEWED BY:

TILLIT TESTING & ENGINEERING COMPANY
6595 NW 36th STREET, STE. 217
MIAMI, FLORIDA 33166
WALTER A. TILLIT JR., P.E.
STRUCTURAL ENGINEER
FL. LIC.NO. 44167
1/10/01

APPROVED AS COMPLYING WITH THE SOUTH FLORIDA BUILDING CODE
DATE February 08, 2001
BY Ishaq I. Chanda
PRODUCT CONTROL DIVISION
BUILDING CODE COMPLIANCE OFFICE
ACCEPTANCE NO. 99-1228.05

TYPE OF GLUE:
RESIBOIS 222 no 30222-01 TYPE 1
EXTERIOR GLUE FOR WOOD

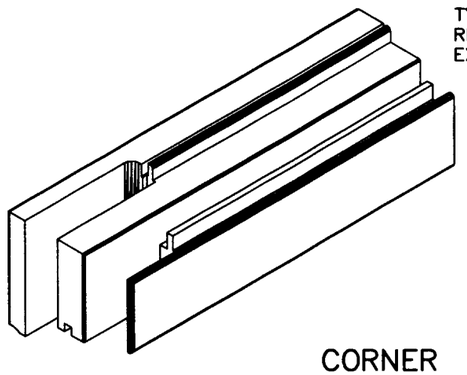

CORNER
ASSEMBLY
(MULTI-FORK)

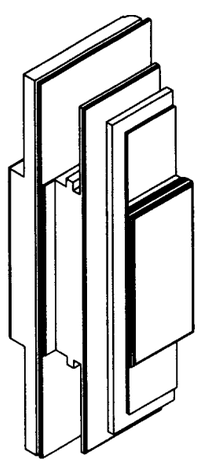

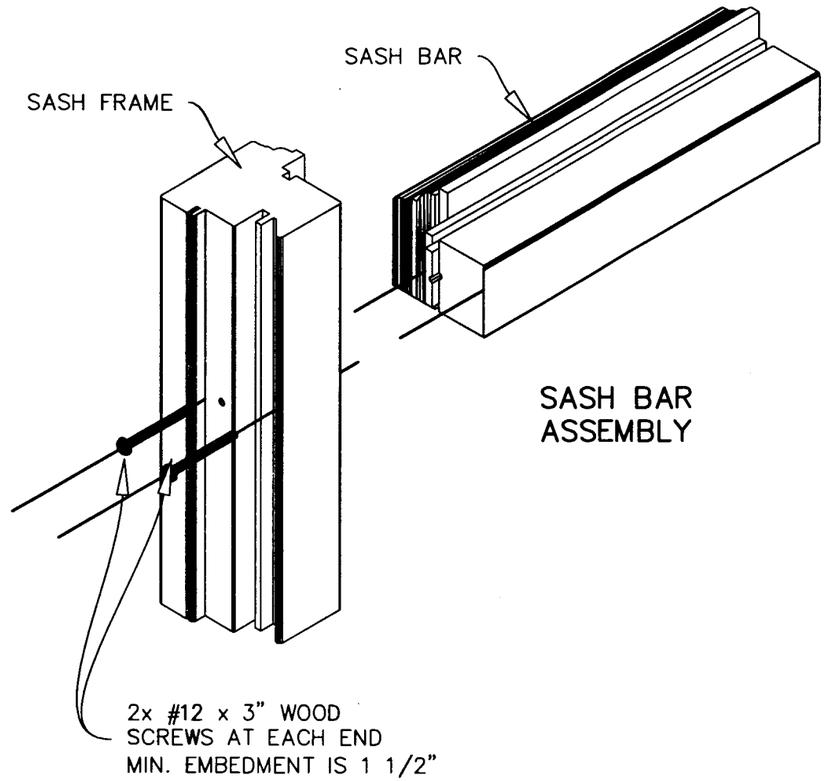

SASH BAR
ASSEMBLY

WINDOWS OF EUROPE AND THE AMERICAS
1855 GRIFFIN ROAD,
SUITE A-274
DANIA, FL 33004

JS SERIE
INSWING & OUTSWING
WOOD WINDOWS
MIAMI DADE COUNTY

Drawing no.: MQJS-NOA3	
Scale: none	Drawn by: S. Marcotte
Date drawn: 01/10/99	Date revised: 07/11/00
File: DJS-W9815	Page: 15/15

STRUCTURALLY REVIEWED BY:

TILLECO INC.
TILLIT TESTING & ENGINEERING COMPANY
6595 NW 36th STREET, STE. 217
MIAMI, FLORIDA 33166
WALTER A. TILLIT JR., P.E.
STRUCTURAL ENGINEER
FL. LIC.NO. 44167
4/9/01

APPROVED AS COMPLYING WITH THE
SOUTH FLORIDA BUILDING CODE
DATE February 08, 2001
BY Ishaq I. Chanda
PRODUCT CONTROL DIVISION
BUILDING CODE COMPLIANCE OFFICE
ACCEPTANCE NO. 99-1228.05