MIAMI-DADE

BUILDING CODE COMPLIANCE OFFICE (BCCO)
PRODUCT CONTROL DIVISION

MIAMI-DADE COUNTY, FLORIDA
METRO-DADE FLAGLER BUILDING
140 WEST FLAGLER STREET, SUITE 1603
MIAMI, FLORIDA 33130-1563
(305) 375-2901 FAX (305) 375-2908

NOTICE OF ACCEPTANCE (NOA)

Lomanco, Inc.
2101 West main Street
Jacksonville, AR 72076

SCOPE:
This NOA is being issued under the applicable rules and regulations governing the use of construction materials. The documentation submitted has been reviewed by Miami-Dade County Product Control Division and accepted by the Board of Rules and Appeals (BORA) to be used in Miami Dade County and other areas where allowed by the Authority Having Jurisdiction (AHJ).

This NOA shall not be valid after the expiration date stated below. The Miami-Dade County Product Control Division (In Miami Dade County) and/or the AHJ (in areas other than Miami Dade County) reserve the right to have this product or material tested for quality assurance purposes. If this product or material fails to perform in the accepted manner, the manufacturer will incur the expense of such testing and the AHJ may immediately revoke, modify, or suspend the use of such product or material within their jurisdiction. BORA reserves the right to revoke this acceptance, if it is determined by Miami-Dade County Product Control Division that this product or material fails to meet the requirements of the applicable building code.

This product is approved as described herein, and has been designed to comply with the High Velocity Hurricane Zone of the Florida Building Code.

DESCRIPTION: 135 Roof Vent, Lomancool 2000 Power Vent

LABELING: Each unit shall bear a permanent label with the manufacturer's name or logo, city, state and following statement: "Miami-Dade County Product Control Approved", unless otherwise noted herein.

RENEWAL of this NOA shall be considered after a renewal application has been filed and there has been no change in the applicable building code negatively affecting the performance of this product.

TERMINATION of this NOA will occur after the expiration date or if there has been a revision or change in the materials, use, and/or manufacture of the product or process. Misuse of this NOA as an endorsement of any product, for sales, advertising or any other purposes shall automatically terminate this NOA. Failure to comply with any section of this NOA shall be cause for termination and removal of NOA.

ADVERTISEMENT: The NOA number preceded by the words Miami-Dade County, Florida, and followed by the expiration date may be displayed in advertising literature. If any portion of the NOA is displayed, then it shall be done in its entirety.

INSPECTION: A copy of this entire NOA shall be provided to the user by the manufacturer or its distributors and shall be available for inspection at the job site at the request of the Building Official.

This consists of pages 1 through 3.
The submitted documentation was reviewed by Jorge L. Acebo.

PRODUCT CONTROL ACCEPTED

ROOFING COMPONENT APPROVAL

Category: Roofing
Sub-Category: Ventilation

Material: Aluminum

TRADE NAMES OF PRODUCTS MANUFACTURED OR LABELED BY APPLICANT:

Product	Dimensions	Test Specification	Product Description
135 Roof Vent, Lomancool 2000 Power Vent	9" x 28.5"	TAS 100	Powered Roof Vent, with fan and thermostat with a aluminum hood.

EVIDENCE SUBMITTED:

Test Agency/Identifier	Name	Report	Date
PRI Asphalt Technologies, Inc.	TAS 100(A)	LOM-011-02-01	04/05/06

APPROVED APPLICATIONS

Cutout: Vent must be located 18" from ridgeline. At chosen location and centered between two roof rafters, cut a 14" diameter hole through shingles and sheathing boards.

Using marked position as center point; scribe a circle that is the same diameter as the vent throat opening. Starting with the drill hole cut vent hole.

Installation: Vents should be evenly spaced on the rear slope of the roof.

Remove roofing nails from top row of shingles so the flashing of the roof vent will slide under shingles. Apply approved roof cement around the edge of the hole. Carefully slide base of vent under shingles with arrow facing up. Make sure the throat of the vent is centered over vent hole. Fasten the base to roof decking at corners, and approx. 4" o.c. 1" from the outside edge of the flange and 1" from stack every 45° with approved roofing nails, keeping heads of nails under shingles where possible. Use a minimum of 32 nails and shall be of sufficient length to penetrate through roof sheathing a minimum of ½". See details drawings herein. Seal all seams and nails with roofing cement.

Net Free Area: Refer to manufacturers published literature

LIMITATIONS:

1. Refer to applicable building codes for required ventilation.
2. 135 Roof Vent, Lomancool 2000 Power Vent, thermostat and wiring shall be installed in compliance with Lomanco, Inc. published instructions, and in accordance with applicable Building Codes.
3. This acceptance is for installations over asphaltic shingle roofs only.
4. 135 Roof Vent, Lomancool 2000 Power Vent, shall not be installed on roof mean heights greater than 33 feet.

DETAIL DRAWINGS

135 Roof Vent, Lomancool 2000 Power Vent

PART #	ITEM	REQ	DESCRIPTION	MATERIAL	MAT WT
0201-501	1	1	DOME	.032±.0025 X 28.50 X 28.50 5005-0 AL	3.250#
0201-502	2	1	BASE	.032±.0025 X 20 X 23 5005-0 AL	1.840#
0201-503	3	1	RAINSHIELD	.019±.0025 X 19.50 X 19.50 5005-0 AL	.913#
0410-501	4	3	BRACKET	16 GA. X 1.250 X 7.580 GALV. STEEL	.195#
0201-507	5	1	SCREEN	.028 X 5 X 41.375-8X8 MESH PERM-A-KOTE	
1404000165	6	12	RIVET	3/16ø X 7/32 OVAL HD. AL	
1405000281	7	3	SCREW	#14 X 1/2 HWUHD TYPEM "AB" ZINC PLT	

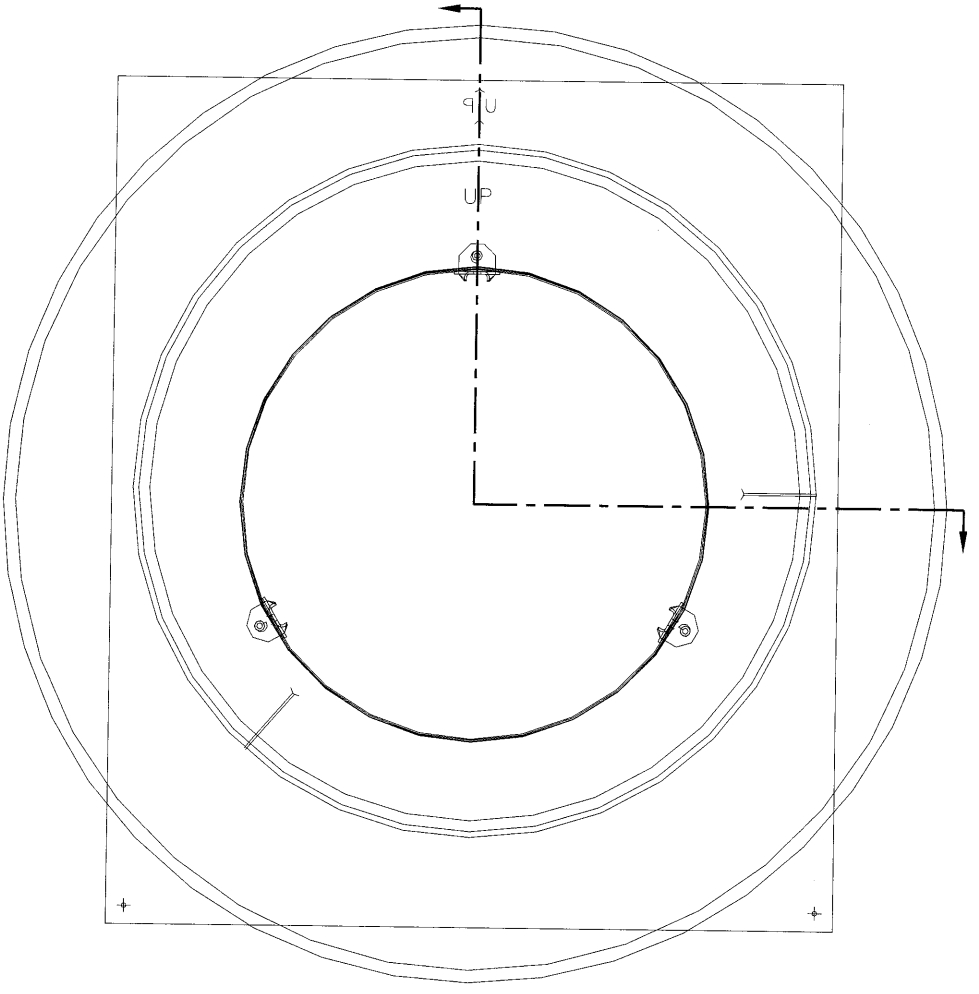

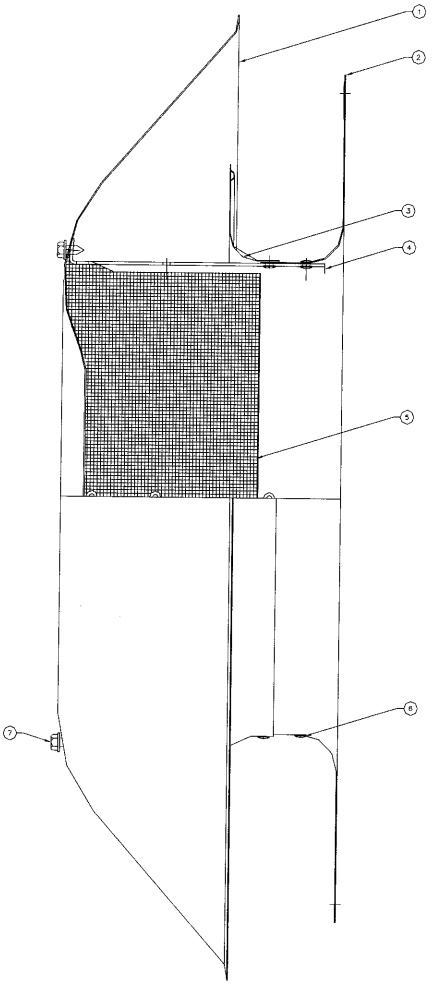

END OF THIS ACCEPTANCE