MIAMI-DADE

BUILDING CODE COMPLIANCE OFFICE (BCCO)
PRODUCT CONTROL DIVISION

MIAMI-DADE COUNTY, FLORIDA
METRO-DADE FLAGLER BUILDING
140 WEST FLAGLER STREET, SUITE 1603
MIAMI, FLORIDA 33130-1563
(305) 375-2901 FAX (305) 375-2908

NOTICE OF ACCEPTANCE (NOA)

Lomanco, Inc.
2101 West main Street
Jacksonville, AR 72076

SCOPE:

This NOA is being issued under the applicable rules and regulations governing the use of construction materials. The documentation submitted has been reviewed by Miami-Dade County Product Control Division and accepted by the Board of Rules and Appeals (BORA) to be used in Miami Dade County and other areas where allowed by the Authority Having Jurisdiction (AHJ).

This NOA shall not be valid after the expiration date stated below. The Miami-Dade County Product Control Division (In Miami Dade County) and/or the AHJ (in areas other than Miami Dade County) reserve the right to have this product or material tested for quality assurance purposes. If this product or material fails to perform in the accepted manner, the manufacturer will incur the expense of such testing and the AHJ may immediately revoke, modify, or suspend the use of such product or material within their jurisdiction. BORA reserves the right to revoke this acceptance, if it is determined by Miami-Dade County Product Control Division that this product or material fails to meet the requirements of the applicable building code.

This product is approved as described herein, and has been designed to comply with the Florida Building Code and the High Velocity Hurricane Zone of the Florida Building Code.

DESCRIPTION: BIB-12, BEB-12, BIB-12TR, BEB-12TR Whirlybirds

LABELING: Each unit shall bear a permanent label with the manufacturer's name or logo, city, state and following statement: "Miami-Dade County Product Control Approved", unless otherwise noted herein.

RENEWAL of this NOA shall be considered after a renewal application has been filed and there has been no change in the applicable building code negatively affecting the performance of this product.

TERMINATION of this NOA will occur after the expiration date or if there has been a revision or change in the materials, use, and/or manufacture of the product or process. Misuse of this NOA as an endorsement of any product, for sales, advertising or any other purposes shall automatically terminate this NOA. Failure to comply with any section of this NOA shall be cause for termination and removal of NOA.

ADVERTISEMENT: The NOA number preceded by the words Miami-Dade County, Florida, and followed by the expiration date may be displayed in advertising literature. If any portion of the NOA is displayed, then it shall be done in its entirety.

INSPECTION: A copy of this entire NOA shall be provided to the user by the manufacturer or its distributors and shall be available for inspection at the job site at the request of the Building Official.

This NOA renews NOA No. 06-0501.09 and consists of pages 1 through 6.
The submitted documentation was reviewed by Jorge L. Acebo.

PRODUCT CONTROL ACCEPTED

ROOFING SYSTEM APPROVAL

Category: Roofing
Sub-Category: Ventilation
Material: Aluminum

TRADE NAMES OF PRODUCTS MANUFACTURED OR LABELED BY APPLICANT:

Product	Dimensions	Test Specification	Product Description
BIB-12 WhirlyBird®	12" wide at base 17-1/8" high Vanes 0.0175" thick Elbo 0.0305" thick Base 0.025" thick	TAS 100(A)	Turbine ventilation system for shingle installation.
BIB-12TR Whirlybird®	12" wide at base 20-½" high Vanes 0.0175" thick Elbo 0.0305" thick Base 0.025" thick	TAS 100(A)	Turbine ventilation system for tile intallation.
BEB-12 WhirlyBird®	12" wide at base 17-1/8" high Vanes 0.0175" thick Elbo 0.0305" thick Base 0.025" thick	TAS 100(A)	Turbine ventilation system for shingle installation.
BEB-12TR Whirlybird®	12" wide at base 20-½" high Vanes 0.0175" thick Elbo 0.0305" thick Base 0.025" thick	TAS 100(A)	Turbine ventilation system for tile intallation.
Turbine Cap	12" dia.	TAS 100(A)	Turbine cap to be installed in the event of a Hurricane Warning.

TRADE NAMES OF PRODUCTS MANUFACTURED BY OTHERS:

Product	Dimensions	Test Specification	Product Description	Manufacturer
Asphalt Roof Cement		ASTM D 4586	Asbestos-free, asphalt based roof cement.	generic
Asphalt Primer		ASTM D 41	Asphalt Primer	generic
Roofing Nails	Minimum #12 x 1¼"	TAS 114	Corrosion resistant annular ring shank nails	generic
Sheet Metal Screws	Minimum #10 x ½"	TAS 114	Sheet metal screw	generic

EVIDENCE SUBMITTED:

Test Agency	Test Identifier	Description	Date
Center for Applied Engineering	MDC-117	TAS 100(A)	03/95
Center for Applied Engineering	MTS -257493B	TAS 100(A)	12/95
PRI Construction Materials Technologies	LOM-012-02-02	TAS100(A)	05/21/07

APPROVED APPLICATIONS

Trade name: BIB-12 WhirlyBird®, BEB-12 WhirlyBird®

System Type A: Mechanical attachment of turbine vent over composition shingles.

Cutout: At chosen location (see Lomanco's instructions for proper placement) and centered between two roof rafters, cut a 12" diameter hole through shingles and sheathing boards. Seal around top and sides of hole with approved roofing cement.

Installation: Determine roof pitch in compliance with Lomanco's instructions and align roof pitch number on elbow with indicator line on flashing. Place three short screws through holes that line up with pre-drilled holes in base.

Place mounting base unit flat on the shingles on its flashing, and coat underside of base flashing with roofing cement. In its pitch-adjusted position, carefully slide upper half of flashing up roof beneath shingles previously rolled back until base is centered over cutout. Rolling back the shingles where necessary, and rechecking pitch setting for vertical alignment, secure the base unit to the roof deck with a minimum of fourteen ring shank roofing nails, equally spaced, approximately ¾" from edge of base per detail drawing "Base". Nails shall be of sufficient length to penetrate through roof sheathing a minimum of ½". Apply roofing cement to underside of shingles overlapping flashing, and press them down onto the flashing. Nail down flashing not covered by shingles ½" to 1" from outer edge with equally spaced ring shank roofing nails.

Rotate top of elbow to level position by turning counterclockwise. Place locking clamp across seam and tighten as shown in Lomanco's instructions with approved sheet metal screw. Seal all seams and nails with approved roofing cement.

Position whirlybird on the base. Line up the pre-drilled holes in the brackets and base and fasten with approved long sheet metal screws.

After installation, verify that whirlybird turns freely. If necessary, minor adjustment may be made by gently prying lowest point of turbine upward to remove any wobble.

Net Free Area: Refer to manufacturers published literature

Note: **Apply roofing cement to seal all exposed flashing edges and seams.**

APPROVED APPLICATIONS

Trade name: BIB-12TR Whirlybird®, BEB-12TR Whirlybird®

System Type A: Mechanical attachment of turbine vent for tile or slate roofing.

Cutout: At chosen location (see Lomanco's instructions for proper placement) and centered between two rafters, cut a 12" diameter hole through sheathing boards.

Installation: After application of 30 lb. felt and 90 lb. roofing material (hot mopped) per Roofing Application Standards RAS 118,119,120, cut 12" diameter hole in roofing membranes to match previous hole cut in sheathing.
Rotate top of elbow clockwise and level in both directions. Prime both sides of base flashing with ASTM D 41 primer, and coat underside of base flashing with ASTM D 4586 flashing cement. Center base over hole and secure the base unit to the roof deck with a minimum of fourteen ring shank roofing nails, equally spaced, approximately ¾" from edge of base per detail drawing "Base". Cut a piece of 90 lb. roofing material a minimum width of 30" x 30" and cut a 12" diameter hole in the center of the roofing material. Place the piece of roofing material over base and hot mop in place. Seal inside center hole of cap sheet with approved flashing cement. Place locking clamp across seam and tighten as shown in Lomanco's instructions with supplied fastener. Seal all seams with approved roofing cement.

Position Whirlybird® on elbow and attach using three sheet metal screws provided. Check to see that Whirlybird® turns freely. If necessary, minor adjustment may be made by gently prying lowest point of turbine upward to remove any wobble.

Net Free Area: Refer to manufacturers published literature

Note: **Apply roofing cement to seal all exposed flashing edges and seams.**

LIMITATIONS:

1. Refer to applicable building codes for required ventilation.

2. BIB-12, BEB-12 Whirlybird® turbine roof ventilators shall be installed over composition shingles roofs only.

3. BIB-12, BEB-12, BIB-12TR, BEB-12TR, Whirlybird® turbine roof ventilators shall not be installed on roof mean heights greater than 33 feet.

4. In the event of a Hurricane Warning or in the event of a high wind event with expected wind speeds in excess of 70 mph, the BIB-12TR, BEB-12TR turbine head shall be removed and replaced with the approved storm cap listed herein.

DETAIL DRAWINGS

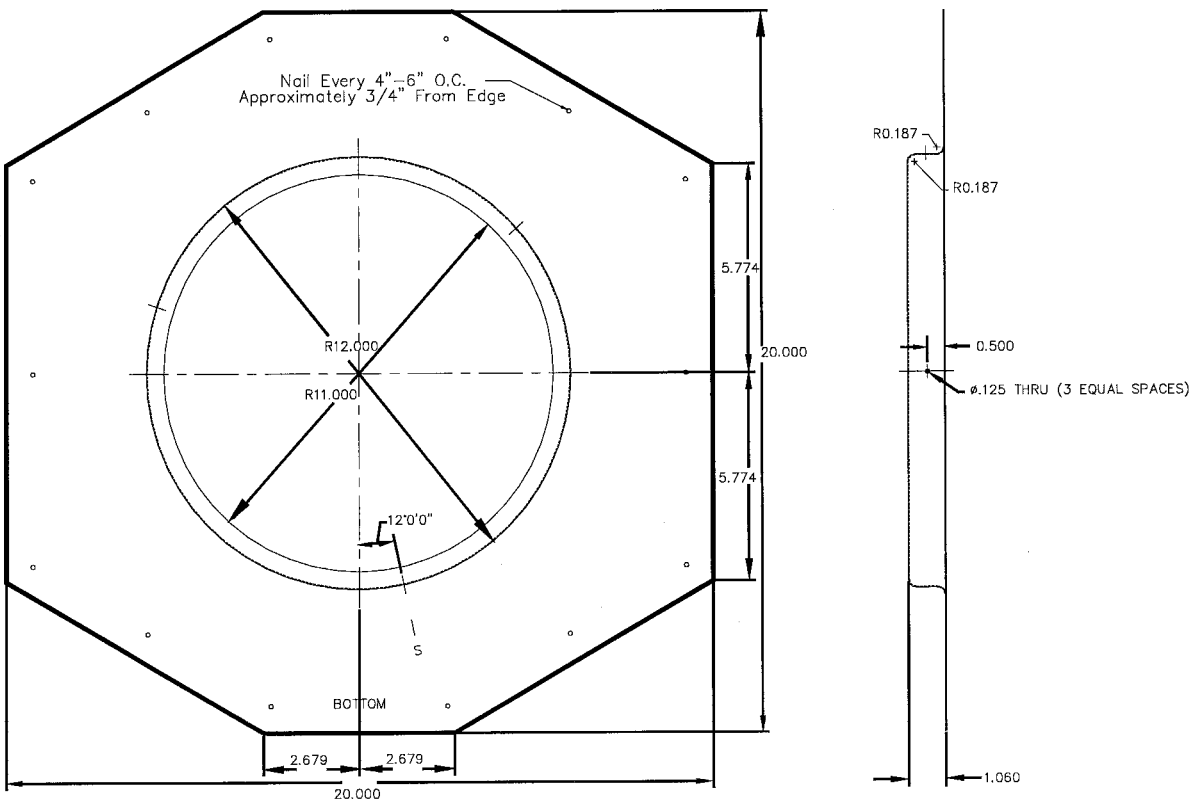

BASE

DETAIL DRAWINGS (CONT'D)

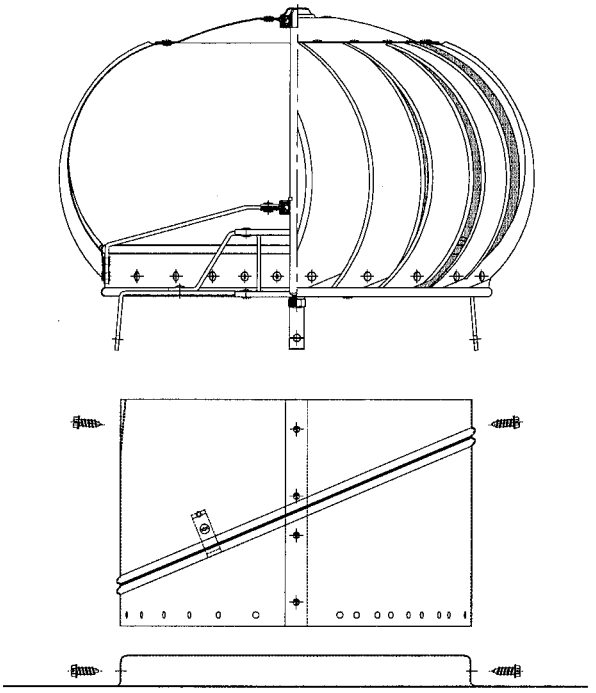

BIB-12, BIB-12TR

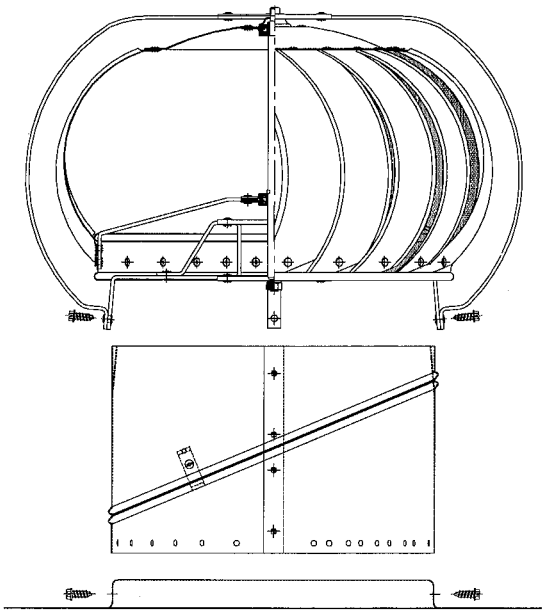

BEB-12, BEB-12TR

END OF THIS ACCEPTANCE