MIAMI-DADE COUNTY
BUILDING CODE COMPLIANCE OFFICE (BCCO)
PRODUCT CONTROL DIVISION

MIAMI-DADE COUNTY, FLORIDA
METRO-DADE FLAGLER BUILDING
140 WEST FLAGLER STREET, SUITE 1603
MIAMI, FLORIDA 33130-1563
(305) 375-2901 FAX (305) 372-6339
www.maimidade.gov/buildingcode

# NOTICE OF ACCEPTANCE (NOA)

**Kolbe & Kolbe Millwork Co.**
**1211 Depot Street**
**Manawa, WI 54949**

**SCOPE:**

This NOA is being issued under the applicable rules and regulations governing the use of construction materials. The documentation submitted has been reviewed by Miami-Dade County Product Control Division and accepted by the Board of Rules and Appeals (BORA) to be used in Miami Dade County and other areas where allowed by the Authority Having Jurisdiction (AHJ).

This NOA shall not be valid after the expiration date stated below. The Miami-Dade County Product Control Division (In Miami Dade County) and/or the AHJ (in areas other than Miami Dade County) reserve the right to have this product or material tested for quality assurance purposes. If this product or material fails to perform in the accepted manner, the manufacturer will incur the expense of such testing and the AHJ may immediately revoke, modify, or suspend the use of such product or material within their jurisdiction. BORA reserves the right to revoke this acceptance, if it is determined by Miami-Dade County Product Control Division that this product or material fails to meet the requirements of the applicable building code. This product is approved as described herein, and has been designed to comply with the Florida Building Code, including the High Velocity Hurricane Zone.

**DESCRIPTION: Series "V707 Awning" White PVC Awning Window – L.M.I.**

**APPROVAL DOCUMENT:** Drawing No. **FL 00340**, titled "V707Awning White PVC Awning Window", sheets 1 thru 4 of 4, dated 12/09/07 with revision A dated 9/16/08, prepared by manufacturer, signed and sealed by Luis R. Lomas, P.E., bearing the Miami-Dade County Product Control Approval stamp with the Notice of Acceptance number and approval date by the Miami-Dade County Product Control Division.

**MISSILE IMPACT RATING: Large and Small Missile Impact Resistant**

**LABELING:** Each unit shall bear a permanent label with the manufacturer's name or logo, city, state and following statement: "Miami-Dade County Product Control Approved", unless otherwise noted herein.

**RENEWAL** of this NOA shall be considered after a renewal application has been filed and there has been no change in the applicable building code negatively affecting the performance of this product.

**TERMINATION** of this NOA will occur after the expiration date or if there has been a revision or change in the materials, use, and/or manufacture of the product or process. Misuse of this NOA as an endorsement of any product, for sales, advertising or any other purposes shall automatically terminate this NOA. Failure to comply with any section of this NOA shall be cause for termination and removal of NOA.

**ADVERTISEMENT:** The NOA number preceded by the words Miami-Dade County, Florida, and followed by the expiration date may be displayed in advertising literature. If any portion of the NOA is displayed, then it shall be done in its entirety.

**INSPECTION:** A copy of this entire NOA shall be provided to the user by the manufacturer or its distributors and shall be available for inspection at the job site at the request of the Building Official.

This NOA consists of this page 1 and evidence page E-1 as well as approval document mentioned above.

The submitted documentation was reviewed by **Manuel Perez, P.E.**

MIAMI-DADE COUNTY APPROVED

**Kolbe & Kolbe Millwork Co.**

## NOTICE OF ACCEPTANCE: EVIDENCE SUBMITTED

**A. DRAWINGS**

1. Manufacturer's die drawings and sections.
2. Drawing No **FL 00340**, Sheets 1 thru 4 of 4, titled "Series V707Awning White PVC Awning Window", dated 12/09/07 with revision A dated 9/16/08, prepared by manufacturer, signed and sealed by Luis R. Lomas, P.E.

**B. TESTS**

1. Test reports on: 1) Air Infiltration Test, per FBC, TAS 202-94
   2) Uniform Static Air Pressure Test, Loading per FBC TAS 202-94
   3) Water Resistance Test, per FBC, TAS 202-94
   4) Large Missile Impact Test per FBC, TAS 201-94
   5) Cyclic Wind Pressure Loading per FBC, TAS 203-94
   6) Forced Entry Test, per FBC 2411 3.2.1, TAS 202-94

   along with marked-up drawings and installation diagram of a series V707Awning white PVC awning window, prepared by National Certified Testing Laboratories, Test Report No. **NCTL-110-10633-21**, dated 08/31/06, signed and sealed by Harold E. Rupp, P.E.

**C. CALCULATIONS**

1. Anchor verification calculations and structural analysis, complying with FBC-2004, dated 11/26/07, prepared, signed and sealed by Luis R. Lomas, P.E.
   **Complies with ASTM E1300-02**

**D. QUALITY ASSURANCE**

1. Miami Dade Building Code Compliance Office (BCCO).

**E. MATERIAL CERTIFICATIONS**

1. Notice of Acceptance No. **05-1208.02** issued to E.I. DuPont DeNemours & Co., Inc. for their "**DuPont Butacite PVB, Interlayer**" dated January 05, 2006, expiring on December 11, 2010.
2. Notice of Acceptance No. **07-0517.07** issued to Thermoplast, Inc. for their "**White Rigid PVC Exterior Profile Extrusions for Windows and Doors**" dated 07/05/07, expiring on 07/05/12.

**F. STATEMENTS**

1. Statement letter of conformance and of no financial interest, dated December 15, 2007, signed and sealed by Luis R. Lomas, P.E.

**G. OTHER**

1. None.

**Manuel Perez, P.E.**
**Product Control Examiner**
**NOA No. 08-0324.19**
**Expiration Date: October 30, 2013**
**Approval Date: October 30, 2008**

| REVISIONS | | | |
|---|---|---|---|
| REV | DESCRIPTION | DATE | APPROVED |
| A | UPDATED PER M.D. COMMENTS | 9/16/08 | R.L. |

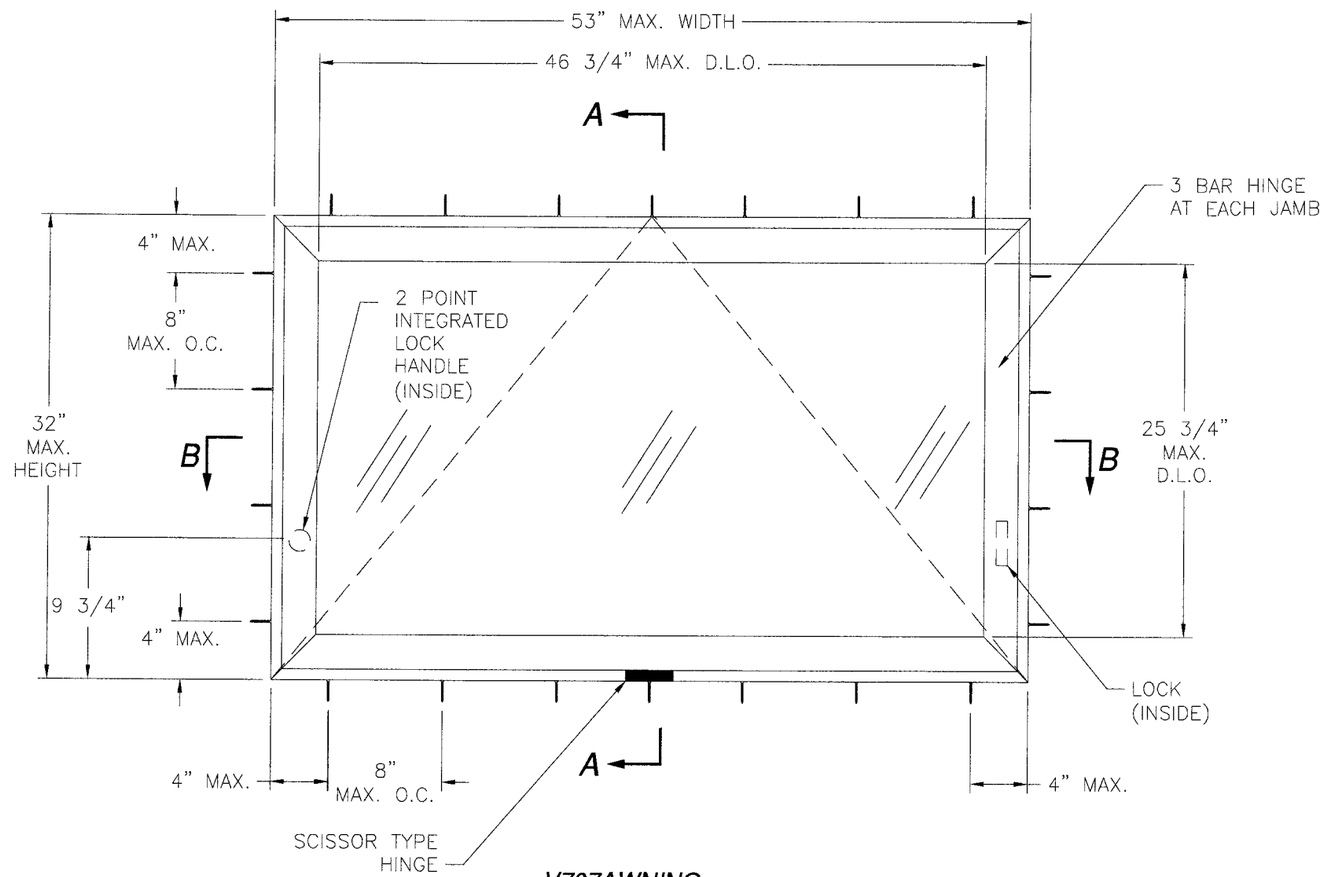


**V707AWNING**

*X CONFIGURATION*
*UP TO 53" X 32"*
*EXTERIOR VIEW*

| DESIGN PRESSURE RATING | IMPACT RATING |
|---|---|
| ±60PSF | LARGE AND SMALL MISSILE IMPACT |

NOTES:

1) THE PRODUCT SHOWN HEREIN IS DESIGNED AND MANUFACTURED TO COMPLY WITH REQUIREMENTS OF THE FLORIDA BUILDING CODE INCLUDING THE HVHZ
2) WOOD FRAMING AND MASONRY OPENING TO BE DESIGNED AND ANCHORED TO PROPERLY TRANSFER ALL LOADS TO STRUCTURE. FRAMING AND MASONRY OPENING IS THE RESPONSIBILITY OF THE ARCHITECT OR ENGINEER OF RECORD.
3) CONTRACTOR IS RESPONSIBLE FOR MAINTAINING STRUCTURAL INTEGRITY OF WINDOW OPENING AND ALL WOOD FRAMING AROUND WINDOW.
4) UNITS MUST BE GLAZED WITH 7/8" IGU CONSISTING OF: 1/8" ANNEALED INTERIOR PANEL – AIR – LAMINATED EXTERIOR PANEL CONSISTING OF 1/8" ANN – .090 DUPONT BUTACITE PVB – 1/8" ANN PER ASTM E1300.
5) APPROVED IMPACT PROTECTIVE SYSTEM IS NOT REQUIRED FOR THIS PRODUCT IN AREAS WHERE WIND BORNE DEBRIS PROTECTION IS REQUIRED.
6) SHIM AS REQUIRED AT EACH INSTALLATION ANCHOR WITH LOAD BEARING SHIM. SHIM WHERE SPACE OF 1/16" OR GREATER OCCURS. MAXIMUM ALLOWABLE SHIM STACK TO BE 1/4".
7) FOR ANCHORING INTO WOOD FRAMING OR 2X BUCK USE #8 WOOD SCREW WITH SUFFICIENT LENGTH TO ACHIEVE A 1 3/8" MINIMUM EMBEDMENT INTO SUBSTRATE. LOCATE ANCHORS AS SHOWN IN ELEVATIONS AND INSTALLATION DETAILS.
8) FOR ANCHORING INTO MASONRY USE 3/16" ITW TAPCONS WITH SUFFICIENT LENGTH TO ACHIEVE A 1 1/4" MINIMUM EMBEDMENT INTO SUBSTRATE WITH 2 5/8" MINIMUM EDGE DISTANCE. LOCATE ANCHORS AS SHOWN IN ELEVATIONS AND INSTALLATION DETAILS.
9) ALL FASTENERS TO BE CORROSION RESISTANT.
10) INSTALLATION ANCHORS SHALL BE INSTALLED IN ACCORDANCE WITH ANCHOR MANUFACTURER'S INSTALLATION INSTRUCTIONS, AND ANCHORS SHALL NOT BE USED IN SUBSTRATES WITH STRENGTHS LESS THAN THE MINIMUM STRENGTH SPECIFIED BELOW:
    A. WOOD – MINIMUM SPECIFIC GRAVITY OF G=0.42
    B. CONCRETE – MINIMUM COMPRESSIVE STRENGTH OF 3,200 PSI.
    C. MASONRY – STRENGTH CONFORMANCE TO ASTM C-90, GRADE N, TYPE 1 (OR GREATER).
11) ALLOWABLE STRESS INCREASE OF 1/3 WAS NOT USED IN THE DESIGN OF THE PRODUCT SHOWN HEREIN. WIND LOAD DURATION FACTOR Cd=1.6 WAS USED FOR WOOD ANCHOR CALCULATIONS.
12) FRAME AND SASH MATERIAL: PVC
13) WHITE PVC TO BE LABELED WITH AAMA CERTIFICATION LABEL, EXTRUDER NAME, CODE CITY AND "MDCA".

TABLE OF CONTENTS


| SHEET NO. | DESCRIPTION |
|---|---|
| 1 | ELEVATION AND GENERAL NOTES |
| 2 | CROSS SECTIONS AND B.O.M. |
| 3 | INSTALLATION DETAILS |
| 4 | COMPONENTS |


Approved as complying with the Florida Building Code
Date Oct. 30, 2008
NOA# 08-0324.19
Miami Dade Product Control Division
By Manuel Perez

KOLBE & KOLBE MILLWORK
1211 DEPOT ST
MANAWA, WI 54949

V707AWNING WHITE PVC AWNING WINDOW
ELEVATIONS AND NOTES

| DRAWN: | DWG NO. | REV |
|---|---|---|
| R.L. | FL 00340 | A |
| SCALE NTS | DATE 12/09/07 | SHEET 1 OF 4 |

Luis R. Lomas 9/19/08

Luis R. Lomas P.E.
Florida No. 62514

PARTS LIST

| NO. | PART NUMBER | DESCRIPTION | MANUFACTURER | MATERIAL |
|---|---|---|---|---|
| 1 | 4506 | FRAME | THERMOPLAST INC | WHITE PVC |
| 2 | 4413 | 7/8" GLAZING BEAD | THERMOPLAST INC | WHITE PVC |
| 3 | 8619 | SASH | THERMOPLAST INC | WHITE PVC |
| 4 | PB-8830-187 | WEATHER STRIP | SCHLEGEL | |
| 5 | | SETTING BLOCK (23X50.8X32mm) | | 80 DUROMETER |
| 6 | HG040-703 | HINGES | ROTO | |
| 7 | OP05-7540 | AWNING DUAL ARM OPERATOR | ROTO | |
| 8 | OP05-1003-51 | 1/8" BOTTOM SPACER | ROTO | |
| 9 | G2HNDLPLT-02 | FASTENER PLATE | ROTO | |
| 10 | LB05-1004-51 | TIE BAR GUIDE | ROTO | |
| 12 | 6011 | OPERATOR RETAINER | | |
| 12 | OP05-8020 | OPERATOR TRACK | ROTO | |
| 13 | LB06-7770 | TIE BAR | ROTO | |
| 14 | LM08-7520-00 | LOCK | ROTO | |
| 15 | LB05-1003-51 | KEEPER | ROTO | |
| 16 | 6067 | SNUBBER | | |
| 17 | | 7/16" SCREN FRAME | | |
| 18 | | OPERATOR SCREWS FH #8 X 1" | | |
| 19 | | HINGE SCREWS FH #7 X 5/8" | | |
| 20 | | SNUBBER SCREWS FH #8 X 1" | | |
| 21 | | OPERATOR TRACK SCREWS | | |
| 22 | | KEEPER SCREWS FH #8 X 5/8" | | |
| 23 | 4052 | LOCK SCREWS PH #8 X 1" | | |
| 24 | 4560 | INTALLATION STRIP | | STEEL G60 |
| 25 | 995 | STRUCTURAL SEALANT | DOW CORNING | |
| 26 | OP05-7810 | HANDLE | ROTO | |
| 27 | | TIE BAR GUIDE SCREW FH #8 X 1" | | |
| 28 | | SNUBBER SCREWS # 8 X 1" | | |

REVISIONS

| REV | DESCRIPTION | DATE | APPROVED |
|---|---|---|---|
| A | UPDATED PER M.D. COMMENTS | 9/16/08 | R.L. |

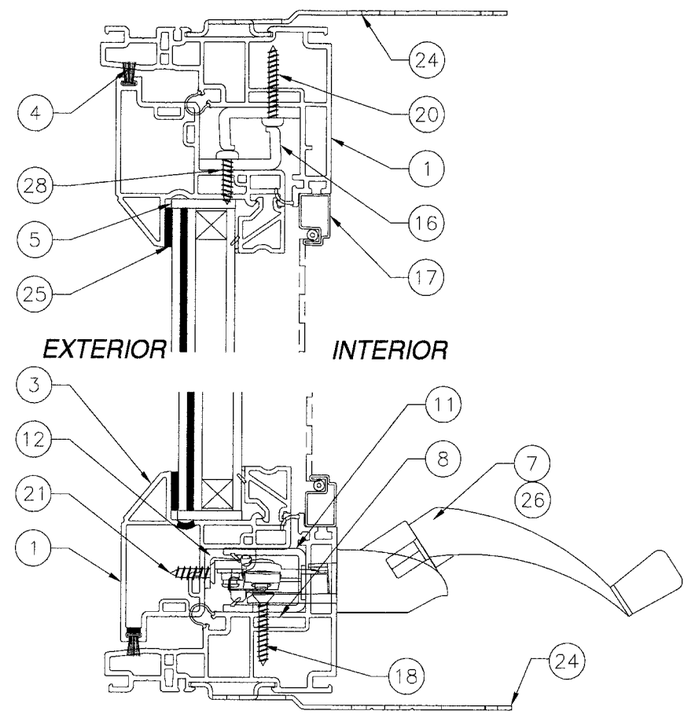


SECTION A-A

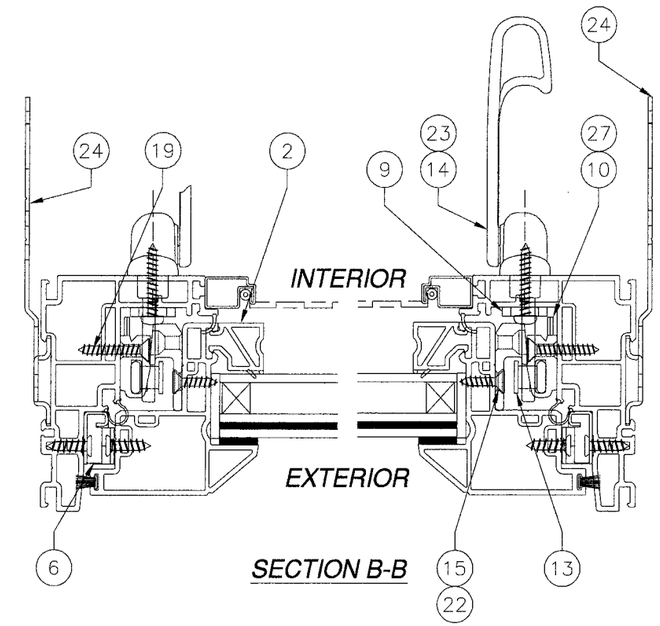


SECTION B-B

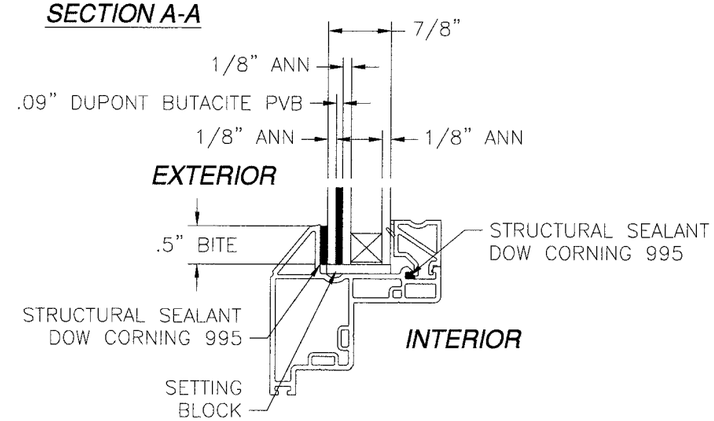


GLAZING DETAIL

Approved as complying with the Florida Building Code
Date Oct. 30, 2008
NOAC 08-0324.19
Miami-Dade Product Control
By

KOLBE & KOLBE MILLWORK
1211 DEPOT ST
MANAWA, WI 54949

V707AWNING WHITE PVC AWNING WINDOW
CROSS SECTIONS AND B.O.M.

| DRAWN: | DWG NO. | REV |
|---|---|---|
| R.L. | FL 00340 | A |
| SCALE NTS | DATE 12/09/07 | SHEET 2 OF 4 |

9/19/08

Luis R. Lomas P.E.
Florida No. 62514

| REVISIONS | | | |
|---|---|---|---|
| REV | DESCRIPTION | DATE | APPROVED |
| A | UPDATED PER M.D. COMMENTS | 9/16/08 | R.L. |

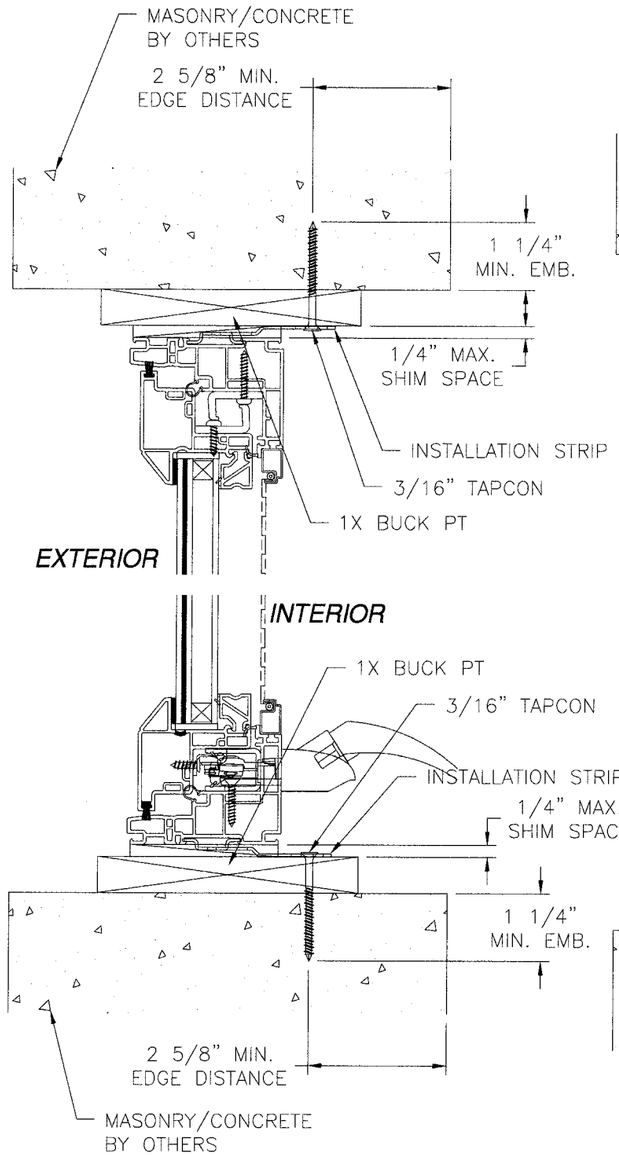


**VERTICAL SECTION**
*INSTALLATION DETAILS*
*1X BUCK*

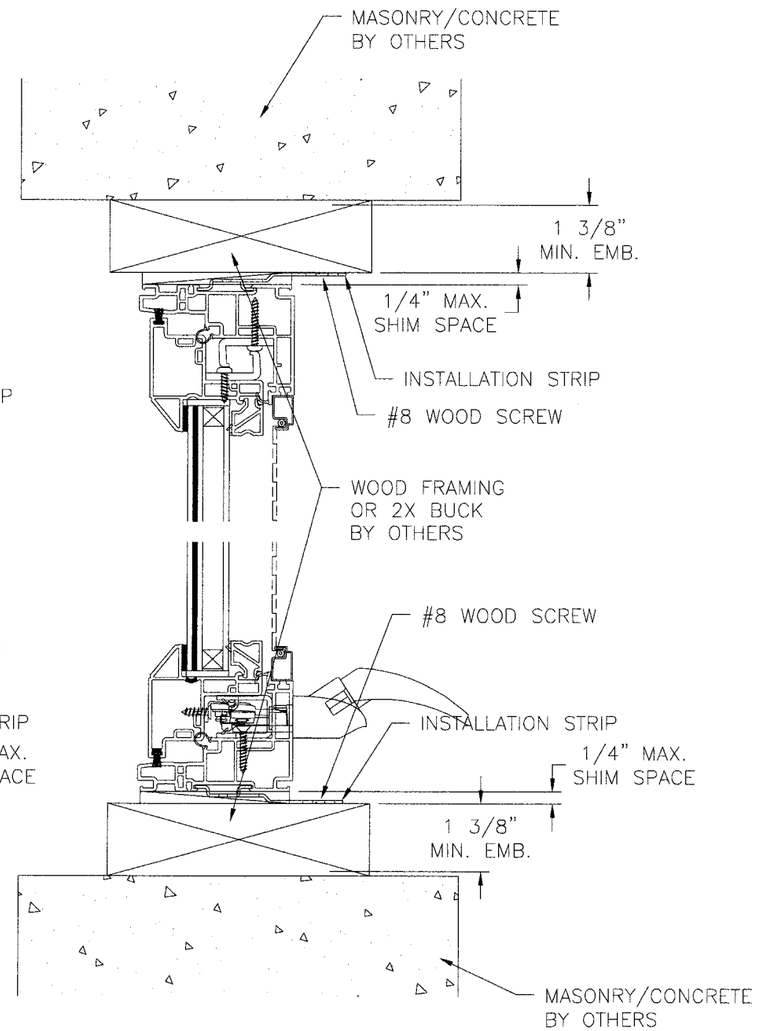


**VERTICAL SECTION**
*INSTALLATION DETAILS*
*WOOD FRAMING OR 2X BUCK*

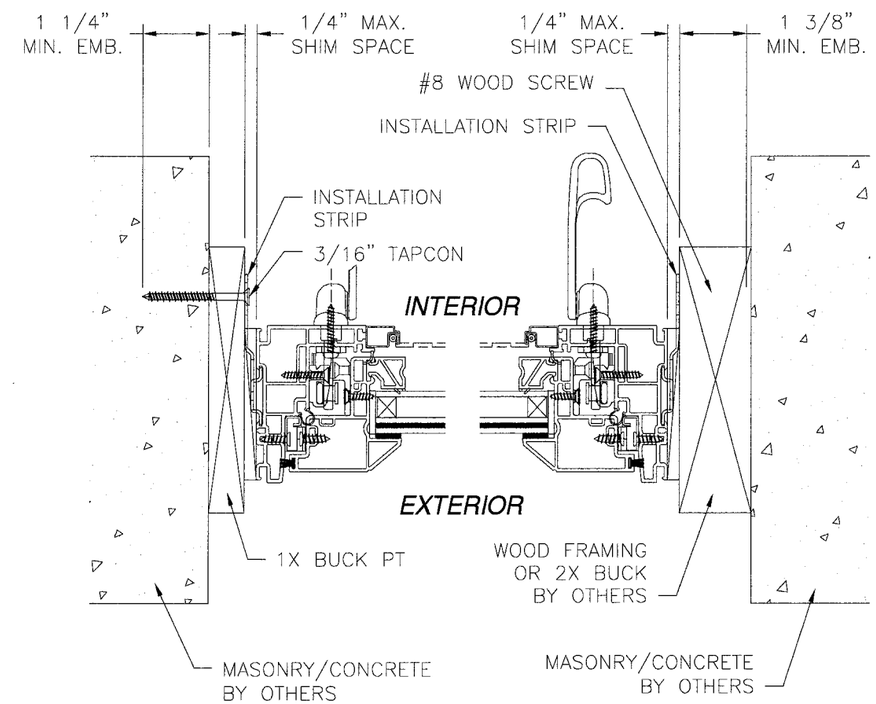


**HORIZONTAL SECTION**
*INSTALLATION DETAILS*
*1X BUCK, WOOD FRAMING OR 2X BUCK*

Approved as complying with the Florida Building Code
Date Oct. 30, 2008
NOA# 08-0324.19
Miami Dade Product Control
Division
By Manuel Perez

KOLBE & KOLBE MILLWORK
1211 DEPOT ST
MANAWA, WI 54949

V707AWNING WHITE PVC AWNING WINDOW
INSTALLATION DETAILS

| DRAWN: | DWG NO. | REV |
|---|---|---|
| R.L. | FL 00340 | A |
| SCALE NTS | DATE 12/09/07 | SHEET 3 OF 4 |

Luis R. Lomas 9/19/08

Luis R. Lomas P.E.
Florida No. 62514

| REVISIONS | | | |
|---|---|---|---|
| REV | DESCRIPTION | DATE | APPROVED |
| A | UPDATED PER M.D. COMMENTS | 9/16/08 | R.L. |

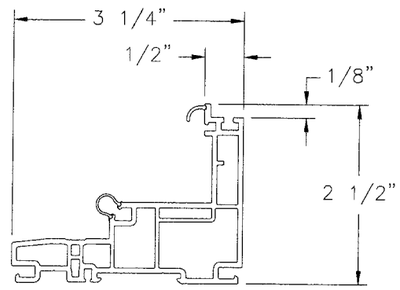


1 **FRAME**
VINYL PVC .071 THICK

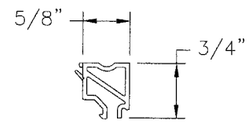


2 **GLAZING BEAD**
VINYL PVC .059 THICK

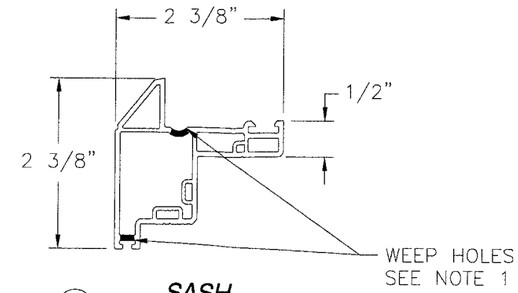


3 **SASH**
VINYL PVC .071 THICK

NOTE:

1.– 5/32" DIAMETER WEEP HOLE LOCATED 2 1/2" FROM EACH END OF SASH BOTTOM RAIL.

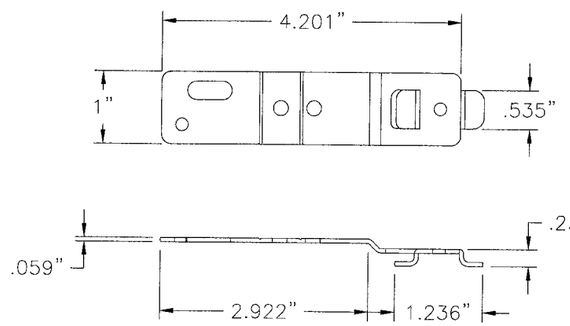


24 **INSTALLATION STRIP**
GALVANIZED STEEL G60

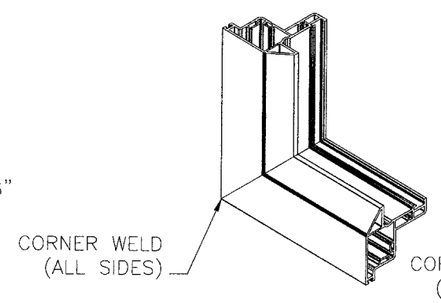


**SASH CORNER CONSTRUCTION**

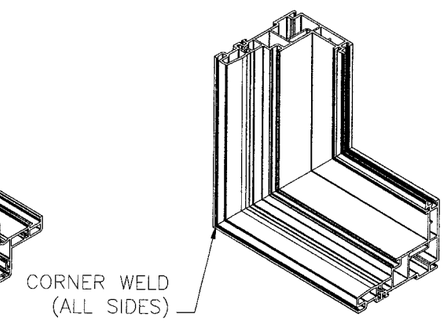


**FRAME CORNER CONSTRUCTION**

Approved as complying with the Florida Building Code
Date: Oct. 30, 2008
NOA# 08-0324.19
Miami Dade Product Control
Division
By: Manuel Perez

KOLBE & KOLBE MILLWORK
1211 DEPOT ST
MANAWA, WI 54949

V707AWNING WHITE PVC AWNING WINDOW COMPONENTS

| DRAWN: | DWG NO. | REV |
|---|---|---|
| R.L. | FL 00340 | A |
| SCALE NTS | DATE 12/09/07 | SHEET 4 OF 4 |

9/19/08

Luis R. Lomas P.E.
Florida No. 62514