MIAMI-DADE COUNTY
BUILDING CODE COMPLIANCE OFFICE (BCCO)
PRODUCT CONTROL DIVISION

MIAMI-DADE COUNTY, FLORIDA
METRO-DADE FLAGLER BUILDING
140 WEST FLAGLER STREET, SUITE 1603
MIAMI, FLORIDA 33130-1563
(305) 375-2901 FAX (305) 372-6339
www.maimidade.gov/buildingcode

NOTICE OF ACCEPTANCE (NOA)

ODL, Inc.
215 East Roosevelt Avenue
Zeeland, MI 49464

SCOPE:

This NOA is being issued under the applicable rules and regulations governing the use of construction materials. The documentation submitted has been reviewed by Miami-Dade County Product Control Division and accepted by the Board of Rules and Appeals (BORA) to be used in Miami Dade County and other areas where allowed by the Authority Having Jurisdiction (AHJ).

This NOA shall not be valid after the expiration date stated below. The Miami-Dade County Product Control Division (In Miami Dade County) and/or the AHJ (in areas other than Miami Dade County) reserve the right to have this product or material tested for quality assurance purposes. If this product or material fails to perform in the accepted manner, the manufacturer will incur the expense of such testing and the AHJ may immediately revoke, modify, or suspend the use of such product or material within their jurisdiction. BORA reserves the right to revoke this acceptance, if it is determined by Miami-Dade County Product Control Division that this product or material fails to meet the requirements of the applicable building code.

This product is approved as described herein, and has been designed to comply with the Florida Building Code, including the High Velocity Hurricane Zone.

DESCRIPTION: Plastic Glazed Tubular Skylight

APPROVAL DOCUMENT: Drawing No. **18707-000**, titled "Tubular Skylights, Severe Weather", sheet 1 of 1, dated 01/27/03, prepared by ODL, Inc., signed and sealed by Lyndon F. Schmidt, P.E. , bearing the Miami-Dade County Product Control renewal stamp with the Notice of Acceptance number and expiration date by the Miami-Dade County Product Control Division.

MISSILE IMPACT RATING: Large and Small Missile Impact Resistant

LABELING: Each unit shall bear a permanent label with the manufacturer's name or logo, city, state and following statement: "Miami-Dade County Product Control Approved", unless otherwise noted herein.

RENEWAL of this NOA shall be considered after a renewal application has been filed and there has been no change in the applicable building code negatively affecting the performance of this product.

TERMINATION of this NOA will occur after the expiration date or if there has been a revision or change in the materials, use, and/or manufacture of the product or process. Misuse of this NOA as an endorsement of any product, for sales, advertising or any other purposes shall automatically terminate this NOA. Failure to comply with any section of this NOA shall be cause for termination and removal of NOA.

ADVERTISEMENT: The NOA number preceded by the words Miami-Dade County, Florida, and followed by the expiration date may be displayed in advertising literature. If any portion of the NOA is displayed, then it shall be done in its entirety.

INSPECTION: A copy of this entire NOA shall be provided to the user by the manufacturer or its distributors and shall be available for inspection at the job site at the request of the Building Official.

This NOA **renews NOA # 03-0415.20** and consists of this page 1 and evidence pages E-1 and E-2, as well as approval document mentioned above.

The submitted documentation was reviewed by **Carlos M. Utrera, P.E.**

MIAMI-DADE COUNTY APPROVED

10/9/08

NOTICE OF ACCEPTANCE: EVIDENCE SUBMITTED

A. DRAWINGS

1. Drawing No. **18707-000**, titled "Tubular Skylights, Severe Weather", sheet 1 of 1, dated 01/27/03, prepared by ODL, Inc., signed and sealed by Lyndon F. Schmidt, P.E.

B. TESTS

1. Test report on Large Missile Impact Test per TAS 201, Cyclic Load Test per TAS 203 and Uniform Static, Air & Water Pressure Test per TAS 202, on "14" Plastic Glazed tubular Skylight", prepared by Architectural Testing, Reports No. **01-43861.01,** dated 03/03/03, signed and sealed by Joseph A. Reed, P.E.
2. Test report on Method for Ignition Properties of Plastics per ASTM D1929, Method for Rate of Burning and/or Extent and Time of Burning of Self Supporting Plastics in a Horizontal Position per ASTM D635, Method for Density of Smoke from the Burning or Decomposition of Plastics per ASTM D2843, Method for Tensile Method of Plastics per ASTM D638 before and after weathering of Lexan 143. They were prepared by ETC Laboratories, Report No. **02-745-12582.0**, dated 11/07/03, signed and sealed by Joseph L. Doldan, P.E.
3. Addendum to ETC 02-745-12582.0 dated 12/03/03, signed and sealed by J. L. Doldan P.E.
   "Submitted under NOA # 03-0415.20"

C. CALCULATIONS

1. Anchoring Analysis of Plastic Glazed Tubular Skylight, prepared by R. W. Building Consultants, Inc. signed and sealed by Lyndon F. Schmidt on 02/28/03.
   "Submitted under NOA # 03-0415.20"

2. Anchoring Analysis of Plastic Glazed Tubular Skylight, prepared by R. W. Building Consultants, Inc., dated 10/07/08, signed and sealed by Lyndon F. Schmidt, P.E.

D. QUALITY ASSURANCE

1. Miami Dade Building Code Compliance Office (BCCO).

10/9/08

Carlos M. Utrera, P.E.
Product Control Examiner
NOA No. 08-0828.03
Expiration Date: February 5, 2014
Approval Date: October 30, 2008

NOTICE OF ACCEPTANCE: EVIDENCE SUBMITTED

E. MATERIAL CERTIFICATIONS

1. None.

F. STATEMENTS

1. Code compliance and no financial interest letter issued by R.W. Building Consultants, Inc., dated 10/07/08, signed and sealed by Lyndon F. Schmidt, PE.
2. No change letter issued by R.W. Building Consultants, Inc., dated 08/26/08, signed by Rick Wright.

G. OTHER

1. Notice of Acceptance No. **03-0415.20**, issued to ODL, Inc., approved on 02/05/04 and expiring on 02/05/09.

10/9/08

Carlos M. Utrera, P.E.
Product Control Examiner
NOA No. 08-0828.03
Expiration Date: February 5, 2014
Approval Date: October 30, 2008

MODEL EZ TUBULAR SKYLIGHTS	
MODEL	TUBE DIAMETER
EZ10SCP	10"
EZ14SCP	14"

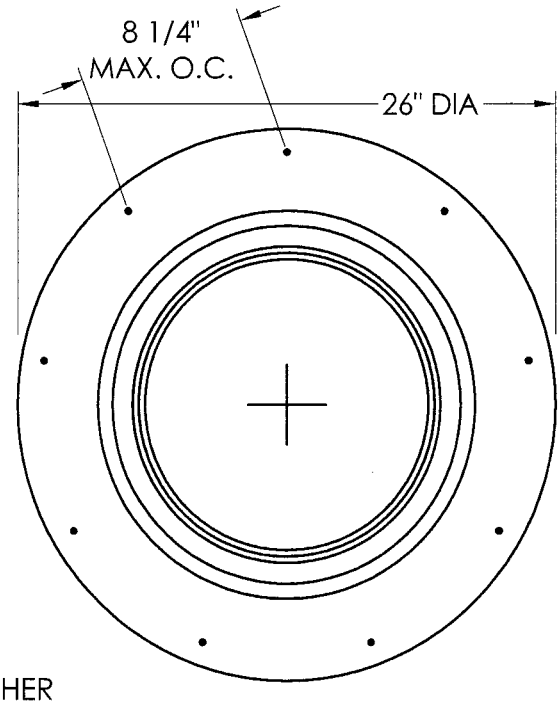

TOP VIEW
SCREW LOCATION

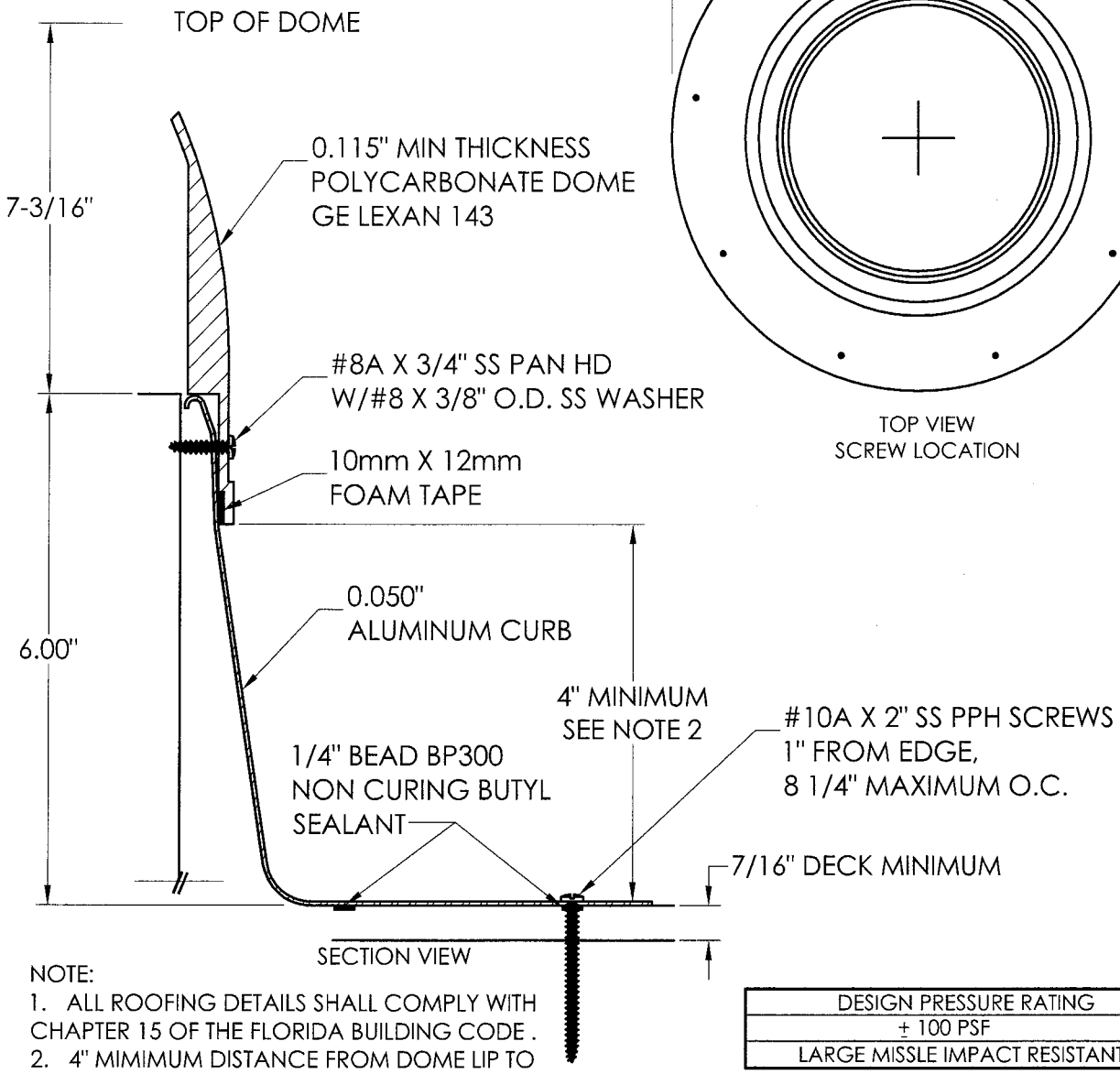

SECTION VIEW

NOTE:
1. ALL ROOFING DETAILS SHALL COMPLY WITH CHAPTER 15 OF THE FLORIDA BUILDING CODE .
2. 4" MIMIMUM DISTANCE FROM DOME LIP TO ROOF SURFACE FOR SHINGLE & BUR W/O INSULATION. FOR INSULATION AND TILE ROOF; ADD THE TILE HEIGHT AND THE INSULATION THICKNESS TO 4".

DESIGN PRESSURE RATING
± 100 PSF
LARGE MISSLE IMPACT RESISTANT

4953B	B	REV NOTES PER MDCBCCO	MSE	DDB	1/27/03
4953	A	RELEASE FOR PRODUCTION	MSE	DDB	1/27/03
ECN	REV	DESCRIPTION	CHK BY	APP'D BY	DATE

PRODUCT RENEWED
Complying with the Florida Building Code
Acceptance No 08-0828.03
Expiration Date 02/05/2014
By
Miami Dade Product Control Division

Documents Prepared By:
RW BUILDING CONSULTANTS, INC.
P.O. Box 230 Valrico FL. 33595
Phone No.: 813.659.9197
Florida Board of Professional Engineers
Certificate Of Authorization No. 9813
10-7-08
Lyndon F. Schmidt, P.E. NO. 43409

ODL
215 EAST ROOSEVELT
ZEELAND, MI 49464

DESCRIPTION:
TUBULAR SKYLIGHT; SEVERE WEATHER

MATERIAL:
ALUMINUM CURB / PC DOME

DRAWING NUMBER:	SHEET NUMBER:	DRAWING DATE:	REVISION DATE:
18707-000	1 OF 1	1/27/03	1/27/03

R:\A - Projects\Project Folders\proj 1401-1500\PF 1407\B. Client Drawings\JK.FL-18707.1.dwg, Model