OFFICIAL FILE COPY
CLERK OF THE BOARD
OF COUNTY COMMISSIONERS
MIAMI-DADE COUNTY, FLORIDA

Memorandum

(Public Hearing 4-5-16)

Date: February 17, 2016

Agenda Item No. 5(D)

To: Honorable Chairman Jean Monestime
and Members, Board of County Commissioners

From: Carlos A. Gimenez
Mayor

Subject: Ordinance Creating the Skyline Development Street Lighting Special Taxing District

Ordinance No. 16-34

Recommendation

It is recommended that the Board of County Commissioners (Board) approve a petition submitted in accordance with Chapter 18 , Article 1, of the Miami-Dade County Code (Code) for the creation of the Skyline Development Street Lighting Special Taxing District. The creation of this district is a subdivision requirement pursuant to Chapter 28 of the Code.

Scope

This proposed Special Taxing District lies within Commissioner Javier D. Souto's District 10 and will provide street lighting services.

Fiscal Impact/Funding Source

Creation of this district will not result in an economic impact on the Miami-Dade County (County) budget. The developer, pursuant to Chapter 18 of the Code, is required to fund the district's first year's lease of the equipment and electricity costs to operate the system and all costs incidental to the creation and administration incurred by the County.

After the first year, the economic impact on the private sector will be a perpetual annual special assessment for the costs of street lighting to all property owners within the district (see page 3 of this memo). Florida Power and Light Company (FPL) is the owner of the system and, therefore, will derive revenues from it. At this time, there will be no increase or decrease in County staffing due to this district. The private sector may increase its staffing levels to provide the service requirements created by this Special Taxing District.

Social Equity Statement

If approved, property owners within the proposed district will pay special assessments appropriately apportioned according to the special benefit they receive from the district's services regardless of their demographics or income levels. The creation of this Special Taxing District, which was requested by 100 percent of the property owners, will provide for lighting continuity between contiguous Street Lighting Special Taxing Districts on connecting roadways, allow higher intensity spotlighting at specific locations, and accommodate future Public Works and Waste Management Department (PWWM) lighting standards.

Track Record/Monitoring

PWWM is the managing entity overseeing this item and the person responsible is Michael R. Bauman, Chief of the Causeways and Special Taxing Districts Division (Division).

Background

Contingent upon Board approval of the creation of this district, the street lighting improvements will be accomplished pursuant to an agreement between the County and FPL. The facilities provided will remain the property of FPL. FPL will be responsible for the maintenance, repair, upgrades, and replacement of the light standards, fixtures, lamps, and all connecting service lines. The Division will administer FPL's agreement, installation, and the billing process.

Boundaries:	On the North, theo. SW 81 Street; On the East, SW 121 Avenue; On the South, theo. SW 81 Terrace; On the West, SW 122 Avenue.
Number of Parcels:	1 (tentative plat proposes two (2) single-family lots)
Number of Owners:	1
Number of Owners With Homestead Exemption Signing Petition:	The petition was submitted by Denys Ferreiro, the sole property owner and developer.
Type of Improvements:	It is expected that the district will install, operate, and maintain four (4) 16,000 lumen sodium vapor traditional post-top streetlights mounted on fiberglass poles. At the discretion of the County Engineer, PWWM reserves the right to adjust the number, style, and luminosity of the street lighting installations, for reasons including, but not limited to, changes in field conditions, to address safety concerns, to provide for lighting continuity between contiguous Street Lighting Special Taxing Districts on connecting roadways, to allow higher intensity spotlighting at specific locations, and to accommodate future PWWM lighting standards.
Required Referendum:	The creation of the district will be subject only to Board approval; no election will be necessary as 100 percent of the property owners signed the petition.
Preliminary Assessment Roll:	Submitted on the same agenda as a separate agenda item for consideration and adoption by the Board and contingent upon the approval of this district's creating ordinance. The implementation of the

	assessment roll will be in accordance with the procedures defined in Chapter 18 of the Code.	
Estimated Completion:	Winter 2016	
Estimated Initial Billing:	November 2017. Assessment billed annually as an itemized portion of the Real Property tax bill.	
	First Year	**Second Year**
Estimated Total District Costs:	$7,091.53	$1,367.57
Method of Apportionment:	Front Footage	
Estimated Annual District Assessments:	**First Year**	**Second Year**
Per Assessable Front Foot:	Costs to be	$4.2737
For A Typical Lot:	provided by Petitioner	$683.80

The above annual costs and assessment information are based on the expected lighting services to be provided by the district and are subject to change in the event that district services are adjusted by the Department Director as provided herein.

State or Federal grants are not applicable to this Special Taxing District.

Each Street Lighting Special Taxing District is unique due to its geographical boundaries, affected property owners, and level of service to be provided. Creation of a new Special Taxing District to provide this service is the best and most cost-effective method to achieve this benefit.

In accordance with the requirements of Chapter 28 of the Code to provide street lighting in new subdivisions through the creation of Street Lighting Special Taxing Districts, and in compliance with the provisions of Section 18-3 (c) of the Code, I have reviewed the facts submitted by PWWM and concur with their recommendation that this district be created pursuant to Section 18-2 of the Code.

Alina T. Hudak
Deputy Mayor

REPORT AND RECOMMENDATIONS
ON THE CREATION OF SKYLINE DEVELOPMENT
STREET LIGHTING SPECIAL TAXING DISTRICT
MIAMI-DADE COUNTY, FLORIDA

Pursuant to Chapter 18 of the Code of Miami-Dade County (Code), and as a result of a detailed investigation of a duly petitioned for Special Taxing District, the following facts are submitted by the Miami-Dade County Public Works and Waste Management Department (PWWM) Director concerning the creation of Skyline Development Street Lighting Special Taxing District.

1. **BOUNDARIES OF THIS DISTRICT**

The proposed district is located entirely within a portion of unincorporated Miami-Dade County, and the boundaries, as set forth in the petition, are as follows:

> A portion of Section 36, Township 54 South, Range 39 East, of Miami-Dade County, Florida; being more particularly described as follows:
>
> The north 165.00 feet of the south 330.00 feet of the W ½ of the NW ¼ of the NW ¼ of the SE ¼, less the east 25.00 feet and less the west 35.00 feet thereof, of Section 36, Township 54 South, Range 39 East, lying and being in Miami-Dade County, Florida (a.k.a. Skyline Development, Tentative Plat # T-23586).

The district's boundaries and geographical location are shown on the attached sketch entitled Skyline Development Street Lighting Special Taxing District and hereinafter referred to as Exhibit A.

2. **LOCATION OF THE INSTALLATIONS TO BE CONSTRUCTED**

Services to be provided under the district will consist of public street lighting located within public rights-of-way.

3. **ESTIMATED COSTS AND ANNUAL EXPENSE FOR MAINTENANCE, REPAIR AND OPERATION OF THIS DISTRICT**

The cost of the streetlights in this district will be continual and is based on a preliminary estimate using Rate Schedule No. SL-1 prepared by the Florida Power and Light Company (FPL) and approved by the Florida Public Service Commission, a copy of which is attached. FPL will install the lights, poles, and service lines at its expense and the facilities will remain the property of FPL. FPL will be responsible for the maintenance, repair, upgrades, and replacement of the light standards, fixtures, lamps, and all connecting service lines. However, the developer(s), through the Special Taxing District, may be required to pay a differential cost if rapid construction techniques cannot be used on this project and this cost is shown in the district's cost estimate below.

Estimated Annual Costs	First Year	Second Year
4 – 16,000 Lumen Sodium Vapor Luminaries	$351.36	$351.36
4 – Fiberglass Poles	$353.76	$353.76
240 Ft. – Underground Wiring	$117.36	$117.36
Annual Fuel Adjustments (Based on 2,880 KWH at $0.07443 Per KWH)	$214.36	$214.36
Franchise Cost (Based on 9.2970% of $1,036.84)	$96.40	$96.40

Estimated Annual Costs (Continued)	**First Year**	**Second Year**
Total Street Lighting Service Costs	$1,133.24	$1,133.24
Engineering & Administrative Costs	$2,619.21	$19.21
Billing, Collecting & Processing Costs	$1,214.10	$150.00
FP&L Restoration Cost	$1,200.00	$0.00
Contingencies	$924.98	$65.12
Total Costs Covered By Petitioner	$7,091.53	
Total Costs to District		$1,367.57

Estimated Annual District Assessments:	**First Year**	**Second Year**
Per Assessable Front Foot:	Costs to be	$4.2737
For A Typical Lot:	provided by	$683.80
	petitioner	

The above annual costs and assessment information are based on the expected lighting services to be provided by the district, and are subject to change in the event district services are adjusted by the Department Director. Total costs and assessments will be adjusted, if necessary, to meet actual costs.

4. CONFORMITY TO THE MASTER PLAN OF MIAMI-DADE COUNTY

The proposed district conforms to and in no way conflicts with the master plan of development for Miami-Dade County (County) (see attached memorandum from the Department of Regulatory and Economic Resources, a successor to the Department of Planning and Zoning).

5. RECOMMENDATION CONCERNING THE DESIRABILITY OF THIS DISTRICT

The need for street lighting in the County is apparent. Residents and property owners of the County continue to demonstrate their desire for street lighting through numerous petitions and personal requests. The ability of the affected properties to pay special assessments is evident since the costs of district services, including any bonds then outstanding, do not exceed twenty-five percent (25%) of the assessed valuation of all properties within the district's boundaries (including homesteads) as shown by the last preceding assessment roll of the County. In my opinion, the streetlights installed pursuant to the creation of this district will provide special benefits to properties within the district's boundaries exceeding the amount of special assessments to be levied.

6. PROCEDURE

As provided for under Chapter 18 of the Code, the property owner(s), the developer(s), within the proposed district shall guarantee payment of all costs and expenses incidental to the creation of such district and shall pay the entire cost of providing street lighting within the district for the first year. Based on front footage, each property owner within the proposed district will pay the County, through a special assessment, a proportionate share of the total annual costs for the second year and each year thereafter.

In the event actual second year costs are lower than the costs estimated herein, the Director of PWWM shall adjust and decrease the front foot rate of assessment. In the event actual second year costs are higher than estimated herein, the front foot rate of the assessment shall not be increased prior to the Board of County Commissioners (Board) adopting a revised assessment roll.

Following the creation of the district by the Board, the petitioner's plat shall not be placed on a Commission agenda for approval prior to receipt of the payment from the developer(s) for the first year costs as specified in Item 3 above. Upon adoption of the petitioner's plat by the Board, the County may then enter into an agreement with FPL, in substantially the form attached herein, wherein the County will pay to FPL any costs associated with the streetlight installation and ongoing costs of service.

7. RECOMMENDATION

It is recommended that Skyline Development Street Lighting Special Taxing District be created pursuant to Section 18-2 of the Code, which provides for the creation of Special Taxing Districts for street lighting in new subdivisions. The creation of this district will be subject to Board approval only; no election will be necessary as 100 percent of the property owners signed the petition. I also recommend that the County Attorney cause to be prepared an ordinance authorizing the creation of the Skyline Development Street Lighting Special Taxing District. Pursuant to Chapter 18 of the Code, the Board shall receive and hear, at a public hearing, remarks by interested persons on this district, and thereafter may adopt such ordinance. Following adoption of the creating ordinance, it is further recommended that the Board adopt the district's Preliminary Assessment Roll resolution to fund district services. Adoption of this resolution will enable the Miami-Dade County Tax Collector to collect the funds necessary to administer the district, reimburse affected County Departments involved in the creation and establishment of the district, as well as provide funds for payment of the district's monthly power bills for the second year and each year thereafter. The ordinance creating the district shall take effect ten (10) days after the date of its adoption unless vetoed by the Mayor, and if vetoed, it shall become effective only upon an override by the Board. My office will also be available to answer any questions from the public or your office in regard to the financial and/or engineering facts of this project. We further recommend that the County Mayor or County Mayor's designee forward the attached report to the Board after review and concurrence with our findings.

Attachments: (1) Copy of Petition and Attachments
(2) Copy of FP&L Rate Schedule No. SL-1
(3) Copy of FP&L Street Lighting Agreement Form
(4) Copy of Memo from Department of Regulatory and Economic Resources
(5) District Boundaries and Geographical Location Sketch (Exhibit A)

Memorandum

Date: June 17, 2015

To: Christopher Agrippa, Division Chief
Office of the Clerk of the Board
Attn: Daysha McBride

From: Michael R. Bauman, Chief
Special Taxing Districts Division
Public Works and Waste Management Department

Subject: Skyline Development Street Lighting
Special Taxing District

In reference to the subject petition, we hereby certify that, in compliance with Section 18-2 of the Miami-Dade County Code, this Department has verified the attached name against the records of the Office of the Property Appraiser, and has concluded that said petition relates to real property in a new subdivision and the signator is owner and/or individual signing in his official capacity as representative of the owner of the property in question. We are therefore submitting the following information:

1.	Total number of parcels of land within district boundaries	1
2.	Total number of owners of property within district boundaries	1
3.	Total number of resident owners within district boundaries (this is a new subdivision area)	0
4.	Total number of signatures on the petition	1
5.	Total number of owners or representatives signing the petition in an official capacity	1
6.	Percentage of owners or representatives signing the petition in their official capacity	100%

Pursuant to Section 18-2 of the Code, this is a valid petition.

By copy of this memorandum, I am forwarding this petition for review by the County Attorney for legal sufficiency.

Attachment

c: Jorge Martinez-Esteve

MIAMI-DADE COUNTY ATTORNEY'S OFFICE
MEMORANDUM

TO: Mike Bauman
Chief, Special Taxing Districts

FROM: Jorge Martinez-Esteve
Assistant County Attorney

DATE: June 22, 2015

SUBJECT: Skyline Development Street Lighting
Special Taxing District

Please be advised that I have reviewed the above referenced petition and find it to be legally sufficient for street lighting purposes only.

MIAMI-DADE COUNTY
PUBLIC WORKS AND WASTE MANAGEMENT DEPARTMENT
SPECIAL TAXING DISTRICTS DIVISION

05-18-2015
Document Preparation Date

Departmental Acceptance Date (Government Use Only)

PETITION FOR STREET LIGHTING SPECIAL TAXING DISTRICT

To the Board of County Commissioners of Miami-Dade County, Florida:

We, the undersigned property owner(s), do hereby petition Miami-Dade County, Florida, for the creation of the Special Taxing District(s) required by the respective plat(s) pursuant to Chapter 18 of the Code of Miami-Dade County, Florida, for any or all of the following: installation, operation and maintenance of sodium vapor street lights of an intensity of 16,000 up to 50,000 lumens, mounted on concrete, fiber glass or existing poles. The petitioned for district lies within that portion of the unincorporated area of Miami-Dade County more fully described on the attached Exhibit A.

Tentative Plat(s) Name(s) SKYLINE DEVELOPMENT

It is understood and agreed that the boundaries of this district and the type and level of services to be provided by this district will be reviewed by the appropriate County authorities. It is also understood that the street lights to be provided shall be in accordance with minimum standards and requirements set forth by the Miami-Dade County Public Works and Waste Management Department.

OWNER'S NAME	OWNER'S ADDRESS	LEGAL DESCRIPTION OF PROPERTY	TAX FOLIO NUMBER
Denys Ferreiro	12002 SW 128TH CT Suite-202, Miami, Fl. 33186	36 54 39 1.25 AC N 165FT OF S330FT OF NW 1/4 OF NW 1/4 OF SE 1/4 LESS E25FT LOT SIZE INRREGULAR	30-4936-000-0760
		MORE FULLY	
		DESCRIBED ON	
Owner		THE ATTACHED	
		"EXHIBIT A"	

Notary Statement and Stamp/ STATE OF FLORIDA/ COUNTY OF MIAMI DADE

I HEREBY CERTIFY that on this day, before me, an officer duly qualified to take acknowledgements, personally appeared [illegible] The [illegible] of [illegible] who produced identification in the norm of [illegible] and who executed the foregoing resolution and acknowledge before me that he executed the same for the purposes herein expressed.

Witness my hand and official seal in the county and state last aforesaid, this 14 day of May 2015

GLADYS MILIAN
Notary Public - State of Florida
My Comm. Expires Apr 1, 2016
Commission # EE 164254
Bonded Through National Notary Assn.

DEPARTMENTAL ACCEPTANCE DATE
(GOVERNMENT USE ONLY)

EXHIBIT "A"

EXHIBIT A TO THE PETITION FOR THE PLAT(S)

KNOWN AS SKYLINE DEVELOPMENT

DATED05-18-2015FOR THE CREATION OF

SPECIAL TAXING DISTRICT(S).

THE NORTH 165 FEET OF THE SOUTH 330 FEET OF THE WEST HALF OF THE NORTHWEST 1/4 OF THE NORTHWEST 1/4 OF THE SOUTHEAST 1/4 IN SECTION 36, TOWNSHIP 54 SOUTH, RANGE 39 EAST. LESS THE EAST 25 FEET THEREOF FOR PUBLIC ROAD PURPOSE, LYING AND BEING IN MIAMI DADE COUNTY , FL.

11

STREET LIGHTING

RATE SCHEDULE: SL-1

AVAILABLE:

In all territory served.

APPLICATION:

For lighting streets and roadways, whether public or private, which are thoroughfares for normal flow of vehicular traffic. Lighting for other applications such as: municipally and privately-owned parking lots; parks and recreational areas; or any other area not expressly defined above, is not permitted under this schedule.

TYPE OF INSTALLATION:

FPL-owned fixtures normally will be mounted on poles of FPL's existing distribution system and served from overhead wires. On request of the Customer, FPL will provide special poles or underground wires at the charges specified below. Customer-owned systems will be of a standard type and design, permitting service and lamp replacement at no abnormal cost to FPL.

SERVICE:

Service includes lamp renewals, patrol, energy from dusk each day until dawn the following day and maintenance of FPL-owned Street Lighting Systems.

LIMITATION OF SERVICE:

For Mercury Vapor, Fluorescent and Incandescent luminaires, no additions or changes in specified lumen output on existing installations will be permitted under this schedule after October 4, 1981 except where such additional lights are required in order to match existing installations.

Stand-by or resale service is not permitted hereunder.

CUSTOMER CONTRIBUTIONS:

A Contribution-in-Aid-of-Construction (CIAC) will be required for:

a) the differential cost between employing rapid construction techniques in trenching, backfilling and pole installation work where no obstructions exist, and the added cost to overcome obstructions such as sprinkler systems, paved surfaces (such as sidewalks, curbs, gutters, and roadways), landscaping, sodding and other obstructions encountered along the Street Light System installation route, including repair and replacement. If the Customer elects to perform work such as trenching and restoration, they will be reimbursed by FPL with a credit (not to exceed the total CIAC cost) for the value of this work as determined by FPL;

b) the installation cost of any new overhead distribution facilities and/or the cost of alterations to existing distribution facilities which are required in order to serve the Street Lighting System less four (4) times the additional annual non-fuel energy revenue generated by the installation or alteration of the Street Lighting System, plus where underground facilities are installed, the differential installation cost between underground and overhead distribution facilities.

These costs shall be paid by the Customer prior to the initiation of any construction work by FPL. The Customer shall also pay any additional costs associated with design modifications requested after the original estimate has been made.

(Continued on Sheet No. 8.716)

(Continued from Sheet No. 8.715)

REMOVAL OF FACILITIES:

If Street Lighting facilities are removed either by Customer request or termination or breach of the agreement, the Customer shall pay FPL an amount equal to the original installed cost of the removed facilities less any salvage value and any depreciation (based on current depreciation rates as approved by the Florida Public Service Commission) plus removal cost.

MONTHLY RATE:

Luminaire Type		Lamp Size Initial Lumens/Watts		kWh/Mo. Estimate	Charge for FPL-Owned Unit ($) Fixtures	Maintenance	Energy Non-Fuel **	Total ***	Charge for Customer-Owned Unit $) Relamping/ Energy ****	Energy Only
High Pressure Sodium Vapor		6,300	70	29	$3.74	1.76	0.77	6.27	$2.56	$0.77
" "		9,500	100	41	$3.81	1.77	1.09	6.67	$2.89	$1.09
" "		16,000	150	60	$3.93	1.80	1.59	7.32	$3.42	$1.59
" "		22,000	200	88	$5.95	2.29	2.33	10.57	$4.63	$2.33
" "		50,000	400	168	$6.01	2.30	4.46	12.77	$6.77	$4.46
	*	12,800	150	60	$4.09	2.01	1.59	7.69	$3.60	$1.59
" "	*	27,500	250	116	$6.33	2.50	3.08	11.91	$5.58	$3.08
" "	*	140,000	1,000	411	$9.53	4.48	10.90	24.91	$15.47	$10.90
Mercury Vapor	*	6,000	140	62	$2.95	1.58	1.64	6.17	$3.25	$1.64
" "	*	8,600	175	77	$3.00	1.58	2.04	6.62	$3.65	$2.04
" "	*	11,500	250	104	$5.01	2.28	2.76	10.05	$5.08	$2.76
" "	*	21,500	400	160	$4.99	2.24	4.24	11.47	$6.52	$4.24
" "	*	39,500	700	272	$7.06	3.81	7.21	18.08	$11.02	$7.21
" "	*	60,000	1,000	385	$7.22	3.72	10.21	21.15	$14.00	$10.21
Incandescent	*	1,000	103	36				7.50	$4.52	$0.95
"	*	2,500	202	71				7.95	$5.48	$1.88
"	*	4,000	327	116				9.53	$6.78	$3.08
Fluorescent	*	19,800	300	122				-	$5.14	$3.24

* These units are closed to new FPL installations.
** The non-fuel energy charge is 2.652¢ per kWh.
*** Bills rendered based on "Total" charge. Unbundling of charges is not permitted.
**** New Customer installations of those units closed to FPL installations cannot receive relamping service.

Charges for other FPL-owned facilities:

Wood pole used only for the street lighting system	$4.54
Concrete pole used only for the street lighting system	$6.23
Fiberglass pole used only for the street lighting system	$7.37
Steel pole used only for the street lighting system *	$6.23
Underground conductors not under paving	3.56 ¢ per foot
Underground conductors under paving	8.71 ¢ per foot

The Underground conductors under paving charge will not apply where a CIAC is paid pursuant to section "a)" under "Customer Contributions." The Underground conductors not under paving charge will apply in these situations.

(Continued on Sheet No. 8.717)

(Continued from Sheet No. 8.716)

On Customer-owned Street Lighting Systems, where Customer contracts to relamp at no cost to FPL, the Monthly Rate for non-fuel energy shall be 2.652¢ per kWh of estimated usage of each unit plus adjustments. On Street Lighting Systems, where the Customer elects to install Customer-owned monitoring systems, the Monthly Rate for non-fuel energy shall be 2.652¢ per kWh of estimated usage of each monitoring unit plus adjustments. The minimum monthly kWh per monitoring device will be 1 kilowatt-hour per month, and the maximum monthly kWh per monitoring device will be 5 kilowatt-hours per month.

During the initial installation period:
Facilities in service for 15 days or less will not be billed;
Facilities in service for 16 days or more will be billed for a full month.

WILLFUL DAMAGE:

Upon the **second** occurrence of willful damage to any FPL-owned facilities, the Customer will be responsible for the cost incurred for repair or replacement. If the lighting fixture is damaged, based on prior written instructions from the Customer, FPL will:

a) Replace the fixture with a shielded cutoff cobrahead. The Customer shall pay $280.00 for the shield plus all associated costs. However, if the Customer chooses to have the shield installed after the first occurrence, the Customer shall only pay the $280.00 cost of the shield; or

b) Replace with a like unshielded fixture. For this, and each subsequent occurrence, the Customer shall pay the costs specified under "Removal of Facilities"; or

c) Terminate service to the fixture.

Option selection shall be made by the Customer in writing and apply to all fixtures which FPL has installed on the Customer's behalf. Selection changes may be made by the Customer at any time and will become effective ninety (90) days after written notice is received.

Conservation Charge	See Sheet No. 8.030.1
Capacity Payment Charge	See Sheet No. 8.030.1
Environmental Charge	See Sheet No. 8.030.1
Fuel Charge	See Sheet No. 8.030.1
Storm Charge	See Sheet No. 8.040
Franchise Fee	See Sheet No. 8.031
Tax Clause	See Sheet No. 8.031

SPECIAL CONDITIONS:

Customers whose lights are turned off during sea turtle nesting season will receive a credit equal to the fuel charges associated with the fixtures that are turned off.

TERM OF SERVICE:

Initial term of ten (10) years with automatic, successive five (5) year extensions unless terminated in writing by either FPL or the Customer at least ninety (90) days prior to the current term's expiration.

RULES AND REGULATIONS:

Service under this schedule is subject to orders of governmental bodies having jurisdiction and to the currently effective "General Rules and Regulations for Electric Service" on file with the Florida Public Service Commission. In case of conflict between any provision of this schedule and said "General Rules and Regulations for Electric Service", the provision of this schedule shall apply.

FPL Account Number: _____
FPL Work Order Number: _____
Taxing District: L-_____

STREET LIGHTING AGREEMENT

In accordance with the following terms and conditions, _____ Street Lighting Special Taxing District (hereinafter called the Customer), requests on this _____ day of _____, _____, from FLORIDA POWER & LIGHT COMPANY (hereinafter called FPL), a corporation organized and existing under the laws of the State of Florida, the following installation or modification of street lighting facilities at (general boundaries) _____, located in Miami-Dade County, Florida.
(city/county)

(a) Installation and/or removal of FPL-owned facilities described as follows:

Lights Installed			Lights Removed		
Fixture Rating (In Lumens)	Fixture Type	# Installed	Fixture Rating (In Lumens)	Fixture Type	# Removed

Poles Installed		Poles Removed	
Pole Type	# Installed	Pole Type	# Removed

Conductors Installed	Conductors Removed
Feet not Under Paving	Feet not Under Paving
Feet Under Paving	Feet Under Paving

(b) Modification to existing facilities other than described above (explain fully):_____

That, for and in consideration of the covenants set forth herein, the parties hereto covenant and agree as follows:

FPL AGREES:

1. To install or modify the street lighting facilities described and identified above (hereinafter called the Street Lighting System), furnish to the Customer the electric energy necessary for the operation of the Street Lighting System, and furnish such other services as are specified in this Agreement, all in accordance with the terms of FPL's currently effective street lighting rate schedule on file at the Florida Public Service Commission (FPSC) or any successive street lighting rate schedule approved by the FPSC.

THE CUSTOMER AGREES:

2. To pay a contribution in the amount of $_____ prior to FPL's initiating the requested installation or modification.

3. To purchase from FPL all of the electric energy used for the operation of the Street Lighting System.

4. To be responsible for paying, when due, all bills rendered by FPL pursuant to FPL's currently effective street lighting rate schedule on file at the FPSC or any successive street lighting rate schedule approved by the FPSC, for facilities and service provided in accordance with this agreement.

5. To provide access, final grading and, when requested, good and sufficient easements, suitable construction drawings showing the location of existing and proposed structures, identification of all non-FPL underground facilities within or near pole or trench locations, and appropriate plats necessary for planning the design and completing the construction of FPL facilities associated with the Street Lighting System.

6. To perform any clearing, compacting, removal of stumps or other obstructions that conflict with construction, and drainage of rights-of-way or easements required by FPL to accommodate the street lighting facilities.

15

IT IS MUTUALLY AGREED THAT:

7. Modifications to the facilities provided by FPL under this agreement, other than for maintenance, may only be made through the execution of an additional street lighting agreement delineating the modifications to be accomplished. Modification of FPL street lighting facilities is defined as the following:

   a. the addition of street lighting facilities;
   b. the removal of street lighting facilities; and
   c. the removal of street lighting facilities and the replacement of such facilities with new facilities and/or additional facilities.

   Modifications will be subject to the costs identified in FPL's currently effective street lighting rate schedule on file at the FPSC, or any successive schedule approved by the FPSC.

8. FPL will, at the request of the Customer, relocate the street lighting facilities covered by this agreement, if provided sufficient right-of-ways or easements to do so. The Customer shall be responsible for the payment of all costs associated with any such Customer- requested relocation of FPL street lighting facilities. Payment shall be made by the Customer in advance of any relocation.

9. FPL may, at any time, substitute for any luminaire/lamp installed hereunder another luminaire/lamp which shall be of at least equal illuminating capacity and efficiency.

10. This Agreement shall be for a term of ten (10) years from the date of initiation of service, and, except as provided below, shall extend thereafter for further successive periods of five (5) years from the expiration of the initial ten (10) year term or from the expiration of any extension thereof. The date of initiation of service shall be defined as the date the first lights are energized and billing begins, not the date of this Agreement. This Agreement shall be extended automatically beyond the initial the (10) year term or any extension thereof, unless either party shall have given written notice to the other of its desire to terminate this Agreement. The written notice shall be by certified mail and shall be given not less than ninety (90) days before the expiration of the initial ten (10) year term, or any extension thereof.

11. In the event street lighting facilities covered by this agreement are removed, either at the request of the Customer or through termination or breach of this Agreement, the Customer shall be responsible for paying to FPL an amount equal to the original installed cost of the facilities provided by FPL under this agreement less any salvage value and any depreciation (based on current depreciation rates as approved by the FPSC) plus removal cost.

12. Should the Customer fail to pay any bills due and rendered pursuant to this agreement of otherwise fail to perform the obligations contained in this Agreement, said obligations being material and going to the essence of this Agreement, FPL may cease to supply electric energy or service until the Customer has paid the bills due and rendered or has fully cured such other breach of this Agreement. Any failure of FPL to exercise its rights hereunder shall not be a waiver of its rights. It is understood, however, that such discontinuance of the supplying of electric energy or service shall not constitute a breach of this Agreement by FPL, nor shall it relieve the Customer of the obligation to perform any of the terms and conditions of this Agreement.

13. The obligation to furnish or purchase service shall be excused at any time that either party is prevented from complying with this Agreement by strikes, lockouts, fires, riots, acts of God, the public enemy, or by cause or causes not under the control of the party thus prevented from compliance and FPL shall not have the obligation to furnish service if it is prevented from complying with this Agreement by reason of any partial, temporary or entire shut-down of service which, in the sole opinion of FPL, is reasonably necessary for the purpose of repairing or making more efficient all or any part of its generating or other electrical equipment.

14. This Agreement supersedes all previous Agreements or representations, either written, oral or otherwise between the Customer and FPL, with respect to the facilities referenced herein and constitutes the entire Agreement between the parties. This Agreement does not create any rights or provide any remedies to third parties or create any additional duty, obligation or undertakings by FPL to third parties.

15. This Agreement shall inure to the benefit of, and be binding upon the successors and assigns of the Customer and FPL.

16. This Agreement is subject to FPL's Electric Tariff, including, but not limited to, the General Rules and Regulations for Electric Service and the Rules of the FPSC, as they are written, or as they may be hereafter revised, amended or supplemented. In the event of any conflict between the terms of this Agreement and the provisions of the FPL Electric Tariff or the FPSC Rules, the provisions of the Electric Tariff and FPSC Rules shall control, as they are now written, or as they may be hereafter revised, amended or supplemented.

IN WITNESS WHEREOF, the parties hereby caused this Agreement to be executed in triplicate by their duly authorized representatives to be effective as of the day and year first written above.

Charges and Terms Accepted:

Miami-Dade County-Special Taxing Districts Division
Customer (Print or type name of Organization)

FLORIDA POWER & LIGHT COMPANY

By:_____
Signature (Authorized Representative)

_____
(Print or type name)

Title:_____

By:_____
(Signature)

_____
(Print or type name)

Title:_____

16

MEMORANDUM

To: Aristides Rivera, P.E., P.L.S., Director
Public Works Department

Date: January 15, 2002

From: Diane O'Quinn Williams, Director
Department of Planning and Zoning

Subject: Street Lighting, Maintenance of Landscape, Walls Adjacent to Double-Frontage Lots and Lakes Special Taxing Districts

Section: As Required
District: As Required
Council: As Required

Effective September 5, 2001, all tentative plats in the unincorporated area of Miami-Dade County submitted to the Land Development Division of the Public Works Department, must be accompanied by a properly executed petition for all applicable special taxing districts including, but not limited to street lights, maintenance of landscape, walls adjacent to double frontage lots, entrance features and lakes. Final Plats will not be presented to the Board of County Commissioners for consideration until the applicable special taxing districts are created, and all fees have been paid. In that regard, to ensure expeditious processing, this Memorandum may serve as approval for certain future special taxing district application requests as being consistent with the intent and purpose of the adopted 2005-2015 Comprehensive Development Master Plan (CDMP). Policy 4A – Capital Improvement Element states: Appropriate funding mechanisms will be adopted and applied by Miami-Dade County in order to assure the fiscal resources to maintain acceptable levels of service. Such funding mechanisms include special tax districts, municipal taxing service units, local option taxes, user fees, local gas tax, general obligation bond, impact fees, and special purpose authorities, or others as appropriate and feasible (Adopted Components as Amended through April 2001, page IX-10). The provision for services over and above minimum for neighborhoods and communities may be accomplished through the special taxing district as may be prescribed by the code.

The Department of Planning and Zoning (DP&Z) has no objection to a blanket approval with condition to establish future special taxing districts as limited to requests for street lighting, landscape maintenance, walls adjacent to double-frontage lots and lake maintenance districts. The previously noted special taxing districts may be established on the condition that the DP&Z review all landscape maintenance districts for compliance with plantings in public rights-of-way and lake maintenance districts for consistency with Landscape Code (Chapter 18A) Section 18A-6(L) Storm Water Retention/Detention Areas.

'QW: GA: TBS

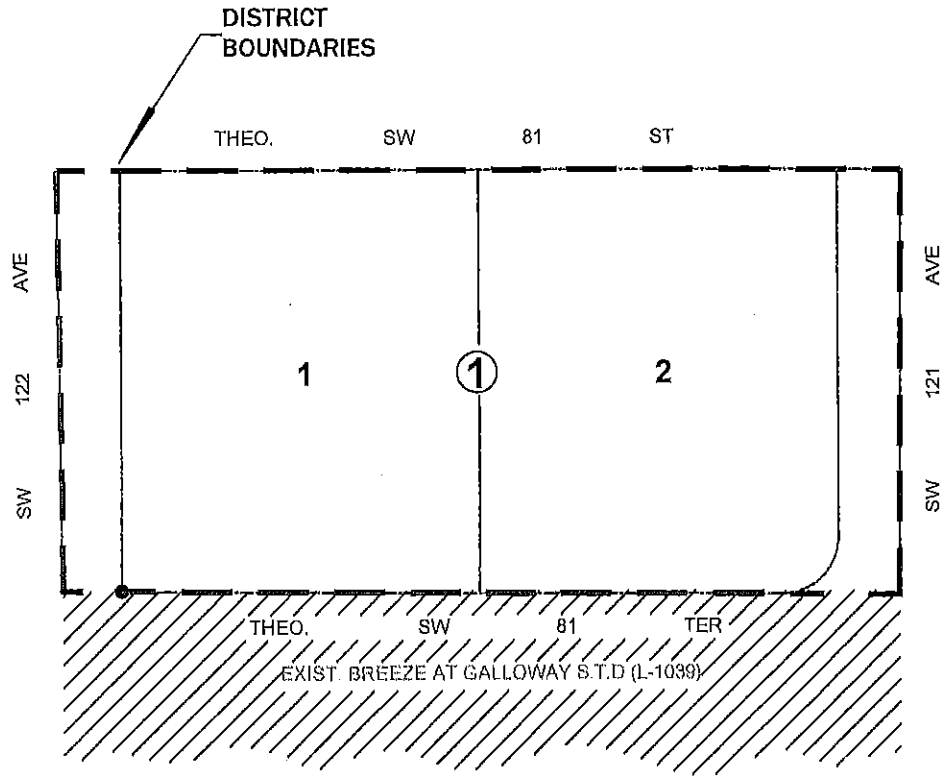

SKYLINE DEVELOPMENT

STREET LIGHTING SPECIAL TAXING DISTRICT

4 - 16,000 LUMEN SODIUM VAPOR TRADITIONAL POST-TOP STREETLIGHTS MOUNTED ON FIBERGLASS POLES.

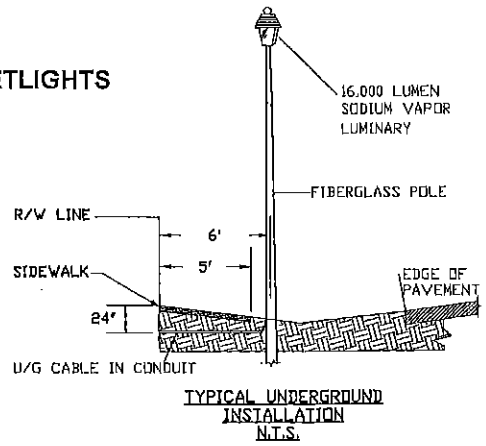

TYPICAL UNDERGROUND
INSTALLATION
N.T.S.

EXHIBIT "A"

(Boundaries and Geographical Location Sketch)

L-1328 (COMM. 0010)
SECTION: 36 - 54 - 39

7/7/2015 3:50 P.M. M. Farje / J. Gutierrez

MEMORANDUM

(Revised)

TO: Honorable Chairman Jean Monestime
and Members, Board of County Commissioners

DATE: April 5, 2016

FROM: Abigail Price-Williams
County Attorney

SUBJECT: Agenda Item No. 5(D)

Please note any items checked.

_____	**"3-Day Rule" for committees applicable if raised**
_____	**6 weeks required between first reading and public hearing**
_____	**4 weeks notification to municipal officials required prior to public hearing**
_____	**Decreases revenues or increases expenditures without balancing budget**
_____	**Budget required**
_____	**Statement of fiscal impact required**
_____	**Statement of social equity required**
_____	**Ordinance creating a new board requires detailed County Mayor's report for public hearing**
✓	**No committee review**
_____	**Applicable legislation requires more than a majority vote (i.e., 2/3's ____, 3/5's ____, unanimous _____) to approve**
_____	**Current information regarding funding source, index code and available balance, and available capacity (if debt is contemplated) required**

Approved _____ Mayor

Veto _____

Override _____

Agenda Item No. 5(D)
4-5-16

ORDINANCE NO. 16-34

ORDINANCE CREATING AND ESTABLISHING A SPECIAL TAXING DISTRICT IN MIAMI-DADE COUNTY, FLORIDA, KNOWN AND DESCRIBED AS SKYLINE DEVELOPMENT STREET LIGHTING SPECIAL TAXING DISTRICT IN ACCORDANCE WITH THE PROVISIONS OF CHAPTER 18 OF THE CODE OF MIAMI-DADE COUNTY, FLORIDA; AND PROVIDING AN EFFECTIVE DATE

WHEREAS, the Miami-Dade County Home Rule Amendment to the Florida Constitution (Article VIII, Section 6) grants to the electors of Miami-Dade County power to adopt a home rule charter of government for Miami-Dade County, Florida, and provides that such charter may provide a method for establishing special taxing districts and other governmental units in Miami-Dade County from time to time; and

WHEREAS, the Home Rule Charter adopted by the electors of Miami-Dade County on May 21, 1957, provides that the Board of County Commissioners, as the legislative and governing body of Miami-Dade County, shall have the power to establish special purpose districts within which may be provided essential facilities and services, including street lighting and that all funds for such districts shall be provided by service charges, special assessments, or general tax levies within such districts only, and that the County Commission shall be the governing body of all such districts; and

WHEREAS, pursuant to such provisions of the Florida Constitution and the Home Rule Charter, the Board of County Commissioners duly enacted Chapter 18 of the Code of Miami-Dade County, Florida, providing for the creation and establishment of special taxing districts and prescribing the procedures therefore; and

WHEREAS, in accordance with the provisions of Chapter 18 of the Code of Miami-Dade County, Florida, a petition for the creation of a special taxing district to be known as the Skyline Development Street Lighting Special Taxing District duly signed by 100% of the owners (developer/petitioner) of property within the proposed district, was filed with the Clerk of the County Commission. Such petition prayed for the creation and establishment of a special taxing district for the purpose of providing street lighting to be financed solely by means of special assessments levied and collected within the area therein and hereinafter described; and

WHEREAS, upon receipt of such petition the Clerk of the County Commission transmitted a copy thereof to the County Mayor or County Mayor's designee who examined it and filed a written report with the Clerk certifying that such petition was sufficient in form and substance and signed and properly presented in accordance with the requirements of Chapter 18 of the Code of Miami-Dade County, Florida; and

WHEREAS, the County Mayor or County Mayor's designee, after making appropriate investigations, surveys, plans and specifications, compiled and filed with the Board of County Commissioners a written report and recommendations, included herein by reference, setting forth the boundaries of the proposed special taxing district, the location, nature and character of the street lighting improvements to be provided and maintained within the proposed district, an estimate of the cost of constructing such improvements, an estimate of the cost of maintaining and operating such improvements and/or services, certification that the proposed district's improvements and/or services conform to the master plan of development for the County, and setting forth recommendations concerning the need for and desirability of the requested district, the ability of the affected properties to bear special assessments to fund the cost of maintaining and operating such improvements and/or services, and an estimate of the amount to be assessed

against each front foot of the benefited properties within the proposed district, and expressing an opinion that the properties to be specially assessed will be benefited in excess of the special assessments to be levied, and the County Mayor or County Mayor's designee attached to such report and recommendations a map or sketch showing the boundaries and geographical location of the proposed district. Such "Report and Recommendations" of the County Mayor or County Mayor's designee was filed with the Clerk and transmitted to the Chairperson; and

WHEREAS, it appears to the Board of County Commissioners from such report of the County Mayor or County Mayor's designee and other investigations that the district petitioned for would be of special benefit to all properties within the proposed boundaries and that the total estimated amount of the special assessments to be levied would not be in excess of such special benefit; the Clerk of the Board will certify the place, date and hour for a public hearing on the petition of the owners (developer/petitioner) and the report and recommendations of the County Mayor or County Mayor's designee -- said hearing was held on Tuesday, April 5, 2016 . Copies of the public notice will be duly published in a newspaper of general circulation published in Miami-Dade County, Florida, and copies thereof will be posted in not less than five (5) public places within the proposed district, and copies thereof will be mailed to all owners of taxable real property within the boundaries of the proposed district as their names and addresses appear on the latest Miami-Dade County Real Property Tax Roll; and

WHEREAS, pursuant to said notice, the Board of County Commissioners on Tuesday, April 5, 2016 , held a public hearing, at which all interested persons will be afforded the opportunity to present their objections, if any, to the creation and establishment of the proposed special taxing district; and

WHEREAS, the Board of County Commissioners, upon review and consideration of the report and recommendations of the County Mayor or County Mayor's designee and the views expressed by the property owners within the proposed special taxing district, has determined to create and establish such special taxing district in accordance with the report and recommendations of the County's Mayor or County Mayor's designee, and the provisions of Chapter 18 of the Code of Miami-Dade County, Florida,

BE IT ORDAINED BY THE BOARD OF COUNTY COMMISSIONERS OF MIAMI-DADE COUNTY, FLORIDA:

Section 1. In accordance with the provisions of Chapter 18 of the Code of Miami-Dade County, Florida, a special taxing district, to be known and designated as the Skyline Development Street Lighting Special Taxing District is hereby created and established in the unincorporated area of Miami-Dade County.

Section 2. The area or boundaries of this proposed special taxing district are as follows:

> A portion of Section 36, Township 54 South, Range 39 East, of Miami-Dade County, Florida; being more particularly described as follows:
>
> The north 165.00 feet of the south 330.00 feet of the W ½ of the NW ¼ of the NW ¼ of the SE ¼, less the east 25.00 feet and less the west 35.00 feet thereof, of Section 36, Township 54 South, Range 39 East, lying and being in Miami-Dade County, Florida (a.k.a. Skyline Development, Tentative Plat # T-23586).

The area and geographical location of this proposed special taxing district are shown on the Exhibit A map or sketch, and made a part herein by reference.

Section 3. The improvements and services to be provided within this proposed special taxing district will consist of:

> Street lighting services described in the County Mayor's memorandum to the Board of County Commissioners, which is adopted and incorporated herein.

Section 4. The installation of such street lighting project will be accomplished pursuant to an agreement between Miami-Dade County and the Florida Power & Light Company. The expected cost of furnishing electric energy to the street lighting project, together with the costs of service, maintenance, and administration for handling billing, collecting assessments, and processing for the first year is estimated to be $7,091.53 and shall be advanced by petitioners. The expected cost of furnishing electric energy to the street lighting project, together with the costs of service, maintenance, and administration for handling billing, collecting assessments, and processing for the second year is estimated to be $1,367.57. The expected cost per assessable front foot of real property within the proposed district for the second year is estimated to be $4.2737. The succeeding years' assessments will be adjusted based on actual costs.

Section 5. It is hereby declared that said improvements and/or services will be a special benefit to all properties within the proposed special taxing district and the total amount of special assessments to be levied as aforesaid will not be in excess of such special benefit.

Section 6. The proposed street lighting agreement between Miami-Dade County and Florida Power & Light Company is hereby approved and made a part hereof by reference, and the County Mayor or County Mayor's designee and the Clerk or Deputy Clerk of the County Commission are hereby authorized and directed to execute said agreement for and on behalf of Miami-Dade County.

Section 7. The County Mayor or County Mayor's designee is authorized and directed to cause the installation of said streetlights to be accomplished within the district in accordance with the provisions of said agreement and with the terms of this Ordinance.

Section 8. The County Mayor or County Mayor's designee is further directed to cause to be prepared and filed with the Clerk of the County Commission a Preliminary Assessment Roll in accordance with the provisions of Section 18-14 of the Code of Miami-Dade County, Florida. As authorized by Section 197.3632, Florida Statutes, all special assessments levied and imposed under the provisions of this Ordinance shall be collected, subject to the provisions of Chapter 197, Florida Statutes, in the same manner and at the same time as ad valorem taxes. In accordance with utilization of the ad valorem tax collection method, if such special assessments are not paid, when due, the potential for loss of title to the property exists.

Section 9. A duly certified copy of this Ordinance shall be filed in the Office of the Clerk of the Circuit Court of Miami-Dade County, Florida, and recorded in the appropriate book of records.

Section 10. The provisions of this Ordinance shall become effective ten (10) days after the date of enactment, unless vetoed by the Mayor, and if vetoed, shall become effective only upon an override by this Board.

PASSED AND ADOPTED: April 5, 2016

Approved by County Attorney as
to form and legal sufficiency: ADW

Prepared by:

Jorge Martinez-Esteve