Memorandum MIAMI-DADE COUNTY

Date: October 7, 2008

Agenda Item No. 8(P)(1)(B)

To: Honorable Chairman Bruno A. Barreiro
and Members, Board of County Commissioners

From: George M. Burgess
County Manager

Subject: Resolution Accepting a Quit Claim Deed from FDG Beacon Countyline, LLC for a Portion of Tract 29 of the Plat of Florida Fruit Lands, as recorded in Plat Book 2, Page 17, in Miami-Dade County, 17-52-40 Commission District: 12

Recommendation

It is recommended that the Board of County Commissioners (BCC) adopt the subject resolution accepting a Quit Claim Deed from FDG Beacon Countyline, LLC (FDG).

Scope

The subject property is located within Commission District 12.

Fiscal Impact/Funding Source

There is no fiscal impact to the County associated with this item.

Track Record/Monitor

Not Applicable.

Background

The subject property illustrated in Exhibit "A" and described in Exhibit "B" is a strip of land 100' wide by approximately 1,320' long. The City of Hialeah is planning to use this property to build a Reverse Osmosis Plant and FDG has agreed to provide the needed Quit Claim Deed to Miami-Dade County in order to accomplish this purpose.

It is therefore recommended, as being in the best interest of the County that the BCC accepts the conveyance of the subject property which will result in substantial benefits for Miami-Dade County.

Assistant County Manager

MEMORANDUM

(Revised)

TO: Honorable Chairman Bruno A. Barreiro and Members, Board of County Commissioners

DATE: October 7, 2008

FROM: R. A. Cuevas, Jr. County Attorney

SUBJECT: Agenda Item No. 8(P)(1)(B)

Please note any items checked.

_____ **"4-Day Rule" ("3-Day Rule" for committees) applicable if raised**

_____ **6 weeks required between first reading and public hearing**

_____ **4 weeks notification to municipal officials required prior to public hearing**

_____ **Decreases revenues or increases expenditures without balancing budget**

_____ **Budget required**

_____ **Statement of fiscal impact required**

_____ **Bid waiver requiring County Manager's written recommendation**

_____ **Ordinance creating a new board requires detailed County Manager's report for public hearing**

_____ **Housekeeping item (no policy decision required)**

_____ **No committee review**

Approved _____ Mayor
Veto _____
Override _____

Agenda Item No. 8(P)(1)(B)
10-7-08

RESOLUTION NO. _____

RESOLUTION ACCEPTING A QUIT CLAIM DEED FROM FDG BEACON COUNTYLINE, LLC, A FLORIDA CORPORATION, FOR A PORTION OF TRACT 29 OF THE PLAT OF FLORIDA FRUIT LANDS COMPANY'S SUBDIVISION NO. 1 AS RECORDED IN PLAT BOOK 2, PAGE 17 OF THE PUBLIC RECORDS OF MIAMI-DADE COUNTY IN SECTION 17, TOWNSHIP 52 SOUTH, RANGE 40 EAST

WHEREAS, FDG BEACON COUNTYLINE, LLC, grantor, has tendered a Quit Claim Deed to Miami-Dade County conveying certain interests in the real property illustrated in Exhibit "A" and described in Exhibit "B" for the public purposes identified in the Manager's memorandum and in the instrument of conveyance attached hereto and made a part hereof; and

WHEREAS, upon consideration of the recommendation of the Public Works Department, the Board of County Commissioners finds and determines that the acceptance of the subject conveyance would be in the public's best interest,

NOW, THEREFORE, BE IT RESOLVED BY THE BOARD OF COUNTY COMMISSIONERS OF MIAMI-DADE COUNTY, FLORIDA, the Board hereby approves and accepts, the Quit Claim Deed from FDG Beacon Countyline, LLC conveying to Miami-Dade County the land legally described herein and directs the Public Works Department to file said deed in the Public Records of Miami-Dade County, Florida.

The foregoing resolution was offered by Commissioner ,

who moved its adoption. The motion was seconded by Commissioner

and upon being put to a vote, the vote was as follows:

Bruno A. Barreiro, Chairman
Barbara J. Jordan, Vice-Chairwoman

Jose "Pepe" Diaz	Audrey M. Edmonson
Carlos A. Gimenez	Sally A. Heyman
Joe A. Martinez	Dennis C. Moss
Dorrin D. Rolle	Natacha Seijas
Katy Sorenson	Rebeca Sosa
Sen. Javier D. Souto	

The Chairperson thereupon declared the resolution duly passed and adopted this 7th day of October, 2008. This resolution shall become effective ten (10) days after the date of its adoption unless vetoed by the Mayor, and if vetoed, shall become effective only upon an override by this Board.

MIAMI-DADE COUNTY, FLORIDA
BY ITS BOARD OF
COUNTY COMMISSIONERS

HARVEY RUVIN, CLERK

By:_____
Deputy Clerk

Approved by County Attorney as
to form and legal sufficiency.

Jorge Martinez-Esteve

SEC 17
TWP 52 S
RGE 40 E

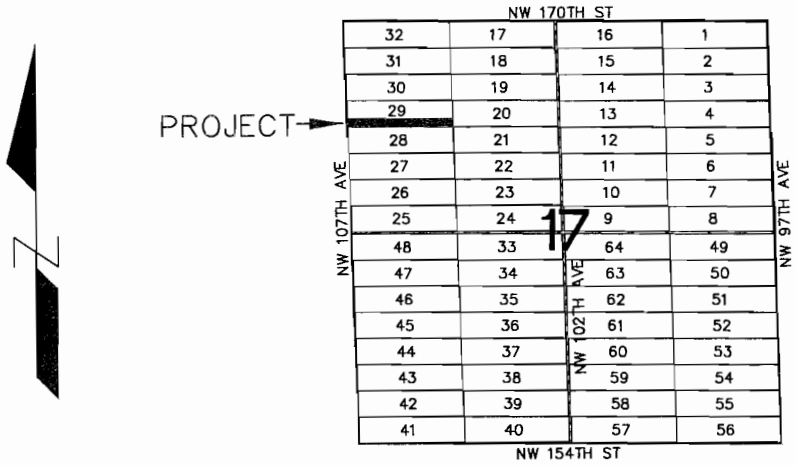

LOCATION MAP
Not to Scale

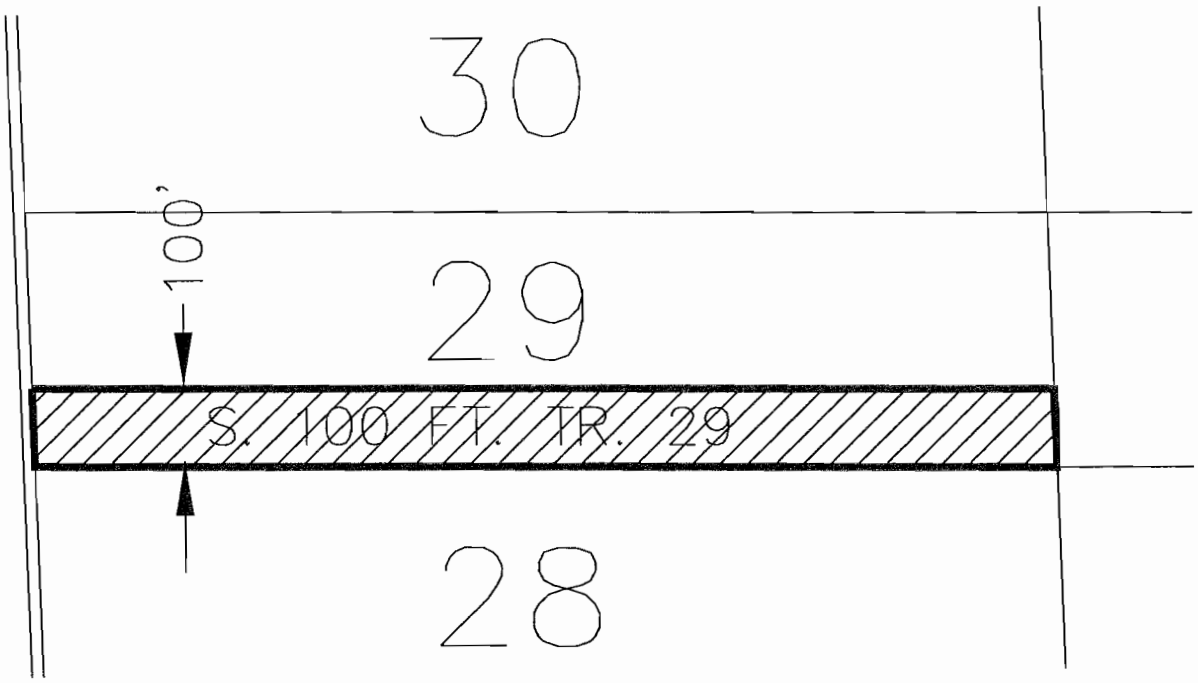

Quit Claim Deed to be accepted

MIAMI-DADE

PUBLIC WORKS DEPT.
RIGHT-OF-WAY ENGINEERING DIVISION
111 N.W. 1ST ST. 16TH FLR.
MIAMI, FL. 33128

EXHIBIT "A"

NOT A SURVEY
SCALE 1" = 250'

7/03/08 S. BURTON PSM

Exhibit "B"

Legal Description

The South 100' feet of Tract 29 of the Plat of Florida Fruit Lands Company's Subdivision No. 1 as recorded in Plat Book 2, Page 17 of the Public Records of Miami-Dade County, Florida all in Section 17, Township 52 South, Range 40 East.

Return to:
Right of Way Division
Miami-Dade County Public Works Dept.
111 N.W. 1st Street
Miami, FL 33128-1970
Instrument prepared by:Luis F. Lacau
Miami-Dade County Public Works Dept
111 N.W. 1st Street
Miami, FL 33128-1970
Folio No. N/A
User Department Public Works

QUIT CLAIM AND CONVEYANCE TO MIAMI-DADE COUNTY BY CORPORATION

STATE OF FLORIDA)
)
COUNTY OF MIAMI-DADE)

THIS INDENTURE, Made this 6 day of June, A.D. 2008, by and between FDG BEACON COUNTYLINE LLC, a limited liability company under the laws of the State of Delaware, and having its office and principal place of business at 2855 Le Jeune Road, 4th Floor Coral Gables, Florida 33134, party of the first part, and the **COUNTY OF MIAMI-DADE**, a Political Subdivision of the State of Florida, and its successors in interest, whose Post Office address is 111 N.W. 1st Street, Miami, Florida 33128-1970, party of the second part,

WITNESSETH:

That the said party of the first part, for and in consideration of the sum of One Dollar ($1.00) to it in hand paid by the party of the second part, the receipt whereof is hereby acknowledged, and for other and further good and valuable considerations, does hereby convey and quitclaim unto the party of the second part, and its successors in interest, all the reversionary rights, title, interest, claims or demands of the party of the first part, in and to the following described land, situate, lying and being in the County of Miami-Dade, State of Florida, to-wit:

See Exhibit "A"

IN WITNESS WHEREOF, the said party of the first part has caused these presents to be executed in its name, and its Corporate Seal to be

hereunto affixed, by its proper officers thereunto duly authorized, the day and year first above written.

Signed, Sealed, Attested
and Delivered in our presence
(2 witnesses for each signature
or for all)

Witness

Jose M. Gonzalez
Witness Printed Name

Witness

Estrella Manso
Witness Printed Name

FDG BEACON COUNTYLINE, LLC
Corporate Name / Printed

By: _____ SEAL)
Vice-President

Jose Hevia
Printed Name

Address (if different)

Kolleen P Cobb (SEAL)
Attest: Secretary

Kolleen Cobb
Printed Name

Address (if different)

CORP SEAL

STATE OF MIAMI-DADE)
)
COUNTY OF FLORIDA)

I HEREBY CERTIFY, that on this 6 day of June, A.D. 2008, before me, an officer duly authorized to administer oaths and take acknowledgments, personally appeared Jose Hevia and Kolleen Cobb, personally known to me, or proven, by producing the following identification: _____
to be the Vice President and Secretary of FDG BEACON COUNTYLINE, LLC, a limited liability company under the laws of the State of Delaware, and in whose name the foregoing instrument is executed and that said officer(s) severally acknowledged before me that they executed said instrument acting under the authority duly vested by said corporation and its Corporate Seal is affixed thereto.

WITNESS my hand and official seal in the County and State aforesaid, the day and year last aforesaid.

Notary Signature

Estrella L. Manso
Printed Notary Signature

NOTARY SEAL/STAMP

Notary Public, State of Florida

My commission expires: August 27, 2008

Commission/Serial No. DD 349102

The foregoing was accepted and approved on the _____ day of _____, 2008, by Resolution No. _____ of the Board of County Commissioners of Miami-Dade County, Florida.

_____
Special Assistant
County Manager's Office

ATTEST: **HARVEY RUVIN,**
Clerk of said Board

By: _____
Deputy Clerk

Exhibit "A"

The South 100 feet of Tract 29 of Florida Fruit Lands Company's Subdivision No. 1 as recorded in Plat Book 2 Page 17 of the Public Records of Miami-Dade County, Florida all in Section 17, Township 52 South, Range 40 East.