Memorandum

MIAMI-DADE COUNTY

Date: September 2, 2008

Agenda Item No. 5(I)

To: Honorable Chairman Bruno A. Barreiro and Members, Board of County Commissioners

From: George M. Burgess, County Manager

Subject: Class I Permit Application by Ward International Trading Company I, LLC to Install One Hundred Thirty (130) Linear Feet of New Concrete Seawall, Backfill Five Hundred Fifty (550) Square Feet of Tidal Waters Within the Miami River and Install a Four Hundred Forty (440) Square Foot Marginal Wood Dock, and Acceptance of a Restrictive Covenant Running with the Land in Favor of Miami-Dade County at 710 and 720 NW North River Drive, Miami

---

Attached, please find for your consideration an application by Ward International Trading Company I, LLC for a Class I Permit. Also, attached is the recommendation of the Director of the Department of Environmental Resources Management and a Resolution seeking the Board's approval of the aforesaid Class I Permit.

Assistant County Manager

Memorandum

MIAMI-DADE COUNTY

Date: September 2, 2008

To: George M. Burgess
County Manager

From: Carlos Espinosa, P.E., Director
Environmental Resources Management

Subject: Class I Permit Application by Ward International Trading Company I, LLC to Install One Hundred Thirty (130) Linear Feet of New Concrete Seawall, Backfill Five Hundred Fifty (550) Square Feet of Tidal Waters Within the Miami River and Install a Four Hundred Forty (440) Square Foot Marginal Wood Dock, and Acceptance of a Restrictive Covenant Running with the Land in Favor of Miami-Dade County at 710 and 720 NW North River Drive, Miami

---

Recommendation

I have reviewed the Class I Permit application by Ward International Trading Company I, LLC. Based upon the applicable evaluation factors set forth in Section 24-48.3 of the Code of Miami-Dade County, Florida, I recommend that the Board of County Commissioners approve the issuance of a Class I Permit for the reasons set forth below.

Scope

The project site is located along the Miami River at 710 and 720 NW North River Drive, Miami, in Commission District 3 (Commissioner Audrey M. Edmonson).

Fiscal Impact/Funding Source

Not applicable.

Track Record/Monitor

Not applicable.

Background

The subject Class I Permit application involves the installation of one hundred thirty (130) linear feet of new seawall and the associated backfilling of five hundred fifty (550) square feet of tidal waters within the Miami River and the installation of a four hundred forty (440) square foot marginal dock. The project site is located in the Miami River at 710 and 720 NW North River Drive, Miami, Miami-Dade County. The subject site consists of two adjacent vacant lots which are the proposed location for a multi-family residential development. The subject lots have unconsolidated shorelines which total one hundred thirty (130) linear feet.

The proposed project includes the installation of one hundred thirty (130) linear feet of new concrete seawall and will result in the filling of five hundred fifty (550) square feet of tidal waters. The proposed filling is the minimum necessary for proper alignment of the proposed seawall. The applicant will mitigate for the unavoidable adverse environmental impacts associated with the proposed project by placing one hundred thirty-seven point five (137.5) cubic yards of natural limerock riprap boulders at an approved artificial reef site within Biscayne Bay. Additionally, the applicant proposes to construct a four (4) foot by one hundred ten (110) foot marginal wood dock for the mooring of up to two (2) powerboat slips.

The proposed project is located within an area identified by the Miami-Dade County Manatee Protection Plan (MPP) as essential manatee habitat for the West Indian Manatee (*Trichechus manatus*). However, the applicant is only proposing mooring of two (2) powerboats which is consistent with the recommendations of the MPP for this area. In addition, the applicant has proffered the attached restrictive covenant running with the land in favor of Miami-Dade County that will limit the property to the mooring of two (2) powerboat slips.

The proposed project has been designed in accordance with all relevant Miami-Dade County coastal construction criteria and is consistent with all other Miami-Dade County coastal protection provisions. Please find attached a DERM Project Report which sets forth the reasons why the project is recommended for approval by DERM pursuant to the applicable evaluation factors set forth in Section 24-48.3 of the Code of Miami-Dade County, Florida. The conditions, limitations, and restrictions set forth in the Project Report attached hereto are incorporated herein by references hereto.

Attachments

Attachment A: Class I Permit Application
Attachment B: Affidavit of Ownership
Attachment C: Affidavit of Members, Managing Members, and Managers of Florida Limited Liability Company
Attachment D: Owner/Agent Letter, Engineer Certification Letter and Project Sketches
Attachment E: Zoning Memorandum
Attachment F: Names and Addresses of Owners of All Riparian or Wetland Property Within Three Hundred (300) Feet of the Proposed Work
Attachment G: Turbidity Control Plan
Attachment H: Restrictive Covenant Running with the Land in Favor of Miami-Dade County
Attachment I: DERM Project Report

NOTICE OF PUBLIC HEARING ON AN APPLICATION BY WARD INTERNATIONAL TRADING COMPANY I, LLC FOR A CLASS I PERMIT TO INSTALL ONE HUNDRED THIRTY (130) LINEAR FEET OF NEW CONCRETE SEAWALL, BACKFILL FIVE HUNDRED FIFTY (550) SQUARE FEET OF TIDAL WATERS WITHIN THE MIAMI RIVER AND INSTALL A FOUR HUNDRED FORTY (440) SQUARE FOOT MARGINAL WOOD DOCK; AND ON THE ACCEPTANCE OF A RESTRICTIVE COVENANT RUNNING WITH THE LAND IN FAVOR OF MIAMI-DADE COUNTY; BOTH LOCATED AT 710 AND 720 NW NORTH RIVER DRIVE, MIAMI, MIAMI-DADE COUNTY, FLORIDA

BOARD OF COUNTY COMMISSIONERS
MIAMI-DADE COUNTY, FLORIDA

NOTICE IS HEREBY GIVEN pursuant to Article IV, Division 1 of Chapter 24 of the Code of Miami-Dade County that the Board of County Commissioners of Miami-Dade County will hold and conduct a Public Hearing on a request by Ward International Trading Company I, LLC for a Class I Permit to install one hundred thirty (130) linear feet of new concrete seawall, backfill five hundred fifty (550) square feet of tidal waters within the Miami River and install a four hundred forty (440) square foot marginal wood dock; and on the acceptance of a restrictive covenant running with the land in favor of Miami-Dade County; both located at 710 and 720 NW North River Drive, Miami, Miami-Dade County, Florida. Such Public Hearing will be held on the 2nd day of September, 2008, at 9:30 AM, at the County Commission Chambers on the 2nd Floor of the Stephen P. Clark Center at 111 NW 1st Street in Miami, Florida.

Plans and details concerning the work requested in the application may be reviewed by interested persons at the office of the Miami-Dade County Department of Environmental Resources Management, 6th Floor, 701 NW 1st Court, Miami, Florida 33136.

Oral statements will be heard and appropriate records made. For accuracy of records, all important facts and arguments should be prepared in writing in triplicate, with two copies being submitted to the Deputy Clerk of the County Commission at the hearing or mailed to her beforehand (Kay Sullivan, Deputy Clerk), 111 NW 1st Street, Stephen P. Clark Center, Suite 17-202, Miami, Florida 33128; and with one copy being submitted beforehand to the Miami-Dade County Department of Environmental Resources Management, 701 NW 1st Court, Miami, Florida 33136.

A person who decides to appeal any decision made by any Board, Agency, or Commission with respect to any matter considered at its meeting or hearing will need a record of proceedings. Such person may need to ensure that a verbatim record of the proceedings is made, including the testimony and evidence upon which the appeal is to be based.

BOARD OF COUNTY COMMISSIONERS
MIAMI-DADE COUNTY, FLORIDA

HARVEY RUVIN, CLERK

BY: _____
Kay Sullivan, Deputy Clerk

MEMORANDUM

(Revised)

TO: Honorable Chairman Bruno A. Barreiro and Members, Board of County Commissioners

DATE: September 2, 2008

FROM: R. A. Cuevas, Jr. County Attorney

SUBJECT: Agenda Item No. 5(I)

Please note any items checked.

_____ **"4-Day Rule" ("3-Day Rule" for committees) applicable if raised**

_____ **6 weeks required between first reading and public hearing**

_____ **4 weeks notification to municipal officials required prior to public hearing**

_____ **Decreases revenues or increases expenditures without balancing budget**

_____ **Budget required**

_____ **Statement of fiscal impact required**

_____ **Bid waiver requiring County Manager's written recommendation**

_____ **Ordinance creating a new board requires detailed County Manager's report for public hearing**

_____ **Housekeeping item (no policy decision required)**

✓ **No committee review**

Approved _____ Mayor
Veto _____
Override _____

Agenda Item No. 5(I)
9-2-08

RESOLUTION NO. _____

RESOLUTION RELATING TO AN APPLICATION BY WARD INTERNATIONAL TRADING COMPANY I, LLC FOR A CLASS I PERMIT TO INSTALL ONE HUNDRED THIRTY (130) LINEAR FEET OF NEW CONCRETE SEAWALL, BACKFILL FIVE HUNDRED FIFTY (550) SQUARE FEET OF TIDAL WATERS WITHIN THE MIAMI RIVER AND INSTALL A FOUR HUNDRED FORTY (440) SQUARE FOOT MARGINAL WOOD DOCK; AND RELATING TO THE ACCEPTANCE OF A RESTRICTIVE COVENANT RUNNING WITH THE LAND IN FAVOR OF MIAMI-DADE COUNTY; BOTH LOCATED AT 710 AND 720 NW NORTH RIVER DRIVE, MIAMI, MIAMI-DADE COUNTY, FLORIDA

WHEREAS, this Board desires to accomplish the purposes outlined in the accompanying memorandum, a copy of which is incorporated herein by reference,

NOW, THEREFORE, BE IT RESOLVED BY THE BOARD OF COUNTY COMMISSIONERS OF MIAMI-DADE COUNTY, FLORIDA, that this Board having considered all the applicable factors contained within Section 24-48.3 of the Code of Miami-Dade County, hereby approves the application by Ward International Trading Company I, LLC for a Class I Permit to install one hundred thirty (130) linear feet of new concrete seawall, backfill five hundred fifty (550) square feet of tidal waters within the Miami River and install a four hundred forty (440) square foot marginal wood dock and hereby accepts the attached restrictive covenant running with the land in favor of Miami-Dade County at 710 and 720 NW North River Drive, Miami, Miami-Dade County, Florida, subject to the conditions set forth in the memorandum from the Director of the Miami-Dade County Department of Environmental Resources Management, a copy of which is attached hereto and made a part hereof. The issuance of this approval does not relieve the applicant from obtaining all applicable Federal, State, and local permits.

The foregoing resolution was offered by Commissioner

who moved its adoption. The motion was seconded by Commissioner

and upon being put to a vote, the vote was as follows:

Bruno A. Barreiro, Chairman
Barbara J. Jordan, Vice-Chairwoman

Jose "Pepe" Diaz	Audrey M. Edmonson
Carlos A. Gimenez	Sally A. Heyman
Joe A. Martinez	Dennis C. Moss
Dorrin D. Rolle	Natacha Seijas
Katy Sorenson	Rebeca Sosa
Sen. Javier D. Souto	

The Chairperson thereupon declared the resolution duly passed and adopted this 2nd day of September, 2008. This resolution shall become effective ten (10) days after the date of its adoption unless vetoed by the Mayor, and if vetoed, shall become effective only upon an override by this Board.

MIAMI-DADE COUNTY, FLORIDA
BY ITS BOARD OF
COUNTY COMMISSIONERS

HARVEY RUVIN, CLERK

By:_____
Deputy Clerk

Approved by County Attorney as
to form and legal sufficiency.

Peter S. Tell

Attachment A

Class I Permit Application

MIAMI-DADE COUNTY

Class I
Permit Application

1. Application number	2. Date Day/Month/Year	3. For official use only
2007 CLI PER 00048		

4. Applicant Information:

Name: Ward International Trading Company I, LLC

Address: 132 Minorca Avenue

Zip Code: 33134

Phone #: 305-378-5555 Fax #: 305-378-9304

5. Applicant's authorized permit agent

Richard Bochnovich, Senior Vice President

Name: Consulting Engineering & Science, Inc.

Address: 8925 S.W. 148th Street - Suite 100

Miami, Florida Zip Code: 33176

Phone #: 305-378-5555 Fax #: 305-378-9304

6. Describe the proposed activity, its purpose and intended use, including a description of the type of structures, if any, to be erected on fills, or pipe or float-supported platforms, and the type, composition and quantity of materials to be discharged or dumped and means of conveyance.

Install One Hundred Thirty (130) Linear Feet of New Concrete Seawall, Backfill Five Hundred Fifty (550) Square Feet of Tidal Waters Within the Miami River, and Install a Four Hundred Forty (440) Square Foot Marginal Wood Dock, and Acceptance of a Restrictive Covenant Running with the Land in Favor of Miami-Dade County

	Dredged/Excavated		Filled/Deposited	
Volume of Material:	CY	CY 125	CY	CY
	Waterward of O.H.W. or M.H.W.	Landward of O.H.W. or M.H.W.	Waterward of O.H.W. or M.H.W.	Landward of O.H.W. or M.H.W.

7. Proposed Use: (Check One)

- ☑ Private
- ☐ Public
- ☐ Commercial
- ☐ Other

8. Names and addresses of adjoining property owners whose property also adjoins the waterway.

Name: Terry B. Conner

Address: 972 N.W. North River Drive

Miami, Fl Zip Code 33136-3020

Name: Tayyab Zaidi

Address: 1200 N.W. 10th Avenue

Miami, Fl Zip Code 33136-2206

9. Location where proposed activity exists or will occur.

Street Address: 710 and 720 N.W. North River Drive

Latitude 25.780462 Longitude -80.209805

Section 5 Township 53S Range 41E

State Miami County Miami-Dade In City or Town Miami Near City Or Town

10. Name of waterway at location of the activity.

Miami River

11. Date activity is proposed to:
Commence 2008 Be completed 2009

12. Is any portion of this activity for which authorization is sought now complete?
☐ Yes
☑ No
If answer is "yes", give reasons in the remarks section. Indicate the existing work on the drawings.
Month and Year the activity was completed _____

13. List all approvals or certifications required by other Federal, state or local agencies for any structures, construction, discharges, deposits or other activities described in this application, including whether the project is a Development of Regional Impacts.

Issuing Agency	Type of Approval	Identification Number	Date of Application	Date of Approval
DERM	Class I	2007 CLI PER 00048	12/18/06	Pending
ACOE	Dredge and Fill	J-2007-1874 LP-MJW	12/18/06	Pending
SFWMD	ERP	070302-19	12/18/06	Pending

14. Has any other agency denied approval for any activity directly related to the activity described herein?
☐ Yes
☑ No

15. Remarks

16. Estimated project cost = $175,000.00

17. Contractor's name and address

Name: TBD License #: _____
Address: _____
_____ Zip Code: _____
Phone #: _____ Fax #: _____

19. To obtain proprietary authorization for work on state-owned submerged lands, please include an additional copy of the following:
☐ 8½ x 11 Location Map
☐ 8½ x 11 Project Drawing
☐ Copy of Application

18. Application is hereby made for a permit or permit(s) to authorize the activities described herein. I agree to provide any additional information/data that may be necessary to provide reasonable assurance or evidence to show that the proposed project will comply with the applicable State Water Quality Standards or other environmental protection standards both during construction and after the project is completed. I also agree to provide entry to the project site for inspectors from the environmental protection agencies for the purpose of making the preliminary analyses of the site and monitoring permitted works, if permit is granted. I certify that I am familiar with the information contained in this application and that to the best of my knowledge and belief, such information is true, complete and accurate. I further certify that I possess the authority to undertake the proposed activities.

Signature of owner
Saeid Mazaheri, Manager of Ward International Company I, LLC
Date 7/1/08

SUBSCRIBED AND SWORN TO ME THIS 1st DAY OF July, 20 08, BY Saeid Mazaheri
☒ PERSONALLY KNOWN ☐ PRODUCED IDENTIFICATION (PLEASE CHECK ONE)
TYPE OF ID PRODUCED _____ Richard B. Bochnovich NOTARY PUBLIC

RICHARD B. BOCHNOVICH
MY COMMISSION # DD 640565
EXPIRES: March 16, 2011
Bonded Thru Notary Public Underwriters

Attachment B

Affidavit of Ownership

Affidavit of Ownership
and Hold Harmless Agreement

Personally Appeared Before Me, Saeid Mazaheri, Manager of Ward International Trading Company I, LLC, that
(Property owner, lessee or Corporate Officer if owner is a corporation)
undersigned authority, and hereby swears and affirms under oath as follows:

1. That your affiant is the record owner or lessee of that certain property* more fully described as:

   Lots 7 and 8, Block 12, of Spring Garden, according to the plat thereof, as recorded in Plat Book 5, at Page 38, of the Public Records of Miami-Dade County, Florida

   * may attach legal description from public records or plat book or a copy of the warranty deed

2. That your affiant is also the riparian and/or littoral owner or lessee of that certain property that is the subject matter of Application No. 2007 CLI PER 00048 for a Class I permit under and pursuant to Section 24-48 of the Code of Miami-Dade County to construct or engage in the following activity:
   Install One Hundred Thirty (130) Linear Feet of New Concrete Seawall, Backfill Five Hundred Fifty (550) Square Feet of Tidal Waters Within the Miami River, and Install a a Four Hundred Forty (440) Square Foot Marginal Wood Dock, and Acceptance of a Restrictive Covenant Running with the Land in Favor of Miami-Dade County

3. That your affiant hereby swears and affirms its ownership or leasehold in the above noted property necessary for the work noted in Paragraph 2 above, and hereby agrees to: defend same and hold the County harmless from any and all liability, claims and damages of any nature whatsoever occurring, including or arising as a result of your affiant not having the proper title to all lands or proper leasehold to all lands that are the subject matter of this application.

STATE OF FLORIDA
COUNTY OF DADE

Owner/Applicant Saeid Mazaheri, Manager
Ward International Trading Company I, LLC

BEFORE ME, the undersigned authority, personally appeared Saeid Mazaheri, who, after being duly sworn, deposes and says that he/she has read the foregoing, and that the statements contained therein are true and correct to the best of his/her knowledge and belief.

Sworn to and subscribed before me this 1st (day) of July (month), 2008 (year).

RICHARD B. BOCHNOVICH
MY COMMISSION # DD 640565
EXPIRES: March 16, 2011
Bonded Thru Notary Public Underwriters

Notary Signature Richard B. Bochnovich Notary Seal

Attachment C

Affidavit of Members, Managing Members, and Managers of Florida Limited Liability Company

RECEIVED

NOV 14 2007

DERM
ENVIRONMENTAL RESOURCES
REGULATION DIVISION

AFFIDAVIT OF MEMBERS, MANAGING MEMBERS, AND MANAGERS OF FLORIDA LIMITED LIABILITY COMPANY

WE, (Print full name(s) and all title(s) of person(s) or entity(s) in the following spaces; if more space needed print additional names and title(s) on separate paper marked as Exhibit A and attach Exhibit A to this Affidavit; the list of names and titles shall include all names on the list required by Section 608.4101(1)(a),Fla. Stat. (2004), as same may be amended from time to time)

Full name	Title(s)
SAEID MAZAHERI	MANAGER;MEMBER
ANGELES SANCHEZ MANSO	MANAGER;MEMBER

hereby swear or affirm that :

1. **The foregoing persons or entities set forth above and on Exhibit A, if applicable, which Exhibit A is attached hereto and incorporated herein by reference hereto, constitute and are all of the Members, Managing Members, and Managers, as those terms are defined in Section 608.402, Fla. Stat.(2004), as same may be amended from time to time, of the Florida Limited Liability Company known a:** WARD INTERNATIONAL TRADING COMPANY I,LLC **(Print name of the Florida Limited Liability Company as the name appears in the Articles of Organization currently filed with the Secretary of State of the State of Florida);**
2. **There are no Members, Managing Members or Managers of the aforesaid Florida Limited Liability Company other than the persons or entities set forth above and on Exhibit A, if applicable.**
3. **There are no provisions in any Articles of Organization of the aforesaid Florida Limited Liability Company or in any operating agreement, written or oral, of the aforesaid Florida Limited Liability Company, as those terms are defined in Section 608.402, Fla. Stat.(2004), as same may be amended from time to time, which prohibit, restrict or limit in any way or in any manner the execution of the instrument or document attached hereto and incorporated herein by reference hereto, to wit,** Class I Permit Application **(Print the title of the instrument or document) by any of the foregoing persons or entities set forth above and on Exhibit A, if applicable, for and on behalf of the aforesaid Florida Limited Liability Company and to bind and obligate the aforesaid Florida Limited Liability as set forth in the foregoing instrument or document.**

2007 CLI
PER 00048

4. **All of the foregoing persons or entities set forth above and on Exhibit A, if applicable, are authorized by the foregoing Florida Limited Liability Company, to execute the instrument or document attached hereto and incorporated herein by reference hereto, to wit,** Class I Permit Application 2007 **(Print the title of the instrument or document) for and on behalf of the aforesaid Florida Limited Liability Company and to bind and obligate the aforesaid Florida Limited Liability Company as set forth in the foregoing instrument or document.** CLI PER 00048
5. **All of the provisions of this Affidavit shall be construed in accordance with the laws of the State of Florida.**

Signature SAEID MAZAHERI

Title(s) ~~MANAGER~~ WARD INTERNATIONAL TRADING COMPANY I, LLC

Sworn to and subscribed before me this 7 **day of** September, 2007 **(year) by** Saeid Mazaheri **(print name legibly), who is personally known to me or who has produced** _____ **(type of identification).**

_____ **(Signature of Notary Public)**

Notary Public State of Florida
Jorge Manuel Vigil
My Commission DD492394
Expires 11/20/2009

_____ **(Print, type or stamp name of notary public)**

(Add additional Signature, Title(s), and Notary Public areas for all other LLC Members, Managing Members, and Managers, as needed)

RECEIVED
NOV 14 2007
DERM
ENVIRONMENTAL RESOURCES
REGULATION DIVISION

RECEIVED

NOV 14 2007

DERM
ENVIRONMENTAL RESOURCES
REGULATION DIVISION

Exhibit A

_____ MANAGER_____
Signature **Title(s)** WARD INTERNATIONAL TRADING COMPANY I, LLC

ANGELES SANCHEZ MANSO

Sworn to and subscribed before me this 7 **day of** Sep., 2007 **(year) by** Angeles Sanchez Manso **(print name legibly), who is personally known to me or who has produced** _____ **(type of identification).**

_____ **(Signature of Notary Public)**

_____ **(Print, type or stamp name of notary public)**

Notary Public State of Florida
Jorge Manuel Vigil
My Commission DD492394
Expires 11/20/2009

(Add additional Signature, Title(s), and Notary Public areas for all other LLC Members, Managing Members, and Managers, as needed)

_____ _____
Signature **Title(s)**

Sworn to and subscribed before me this _____ **day of** _____, _____ **(year) by** _____ **(print name legibly), who is personally known to me or who has produced** _____ **(type of identification).**

_____ **(Signature of Notary Public)**

_____ **(Print, type or stamp name of notary public)**

(Add additional Signature, Title(s), and Notary Public areas for all other LLC Members, Managing Members, and Managers, as needed)

Attachment D

Owner/Agent Letter, Engineer Certification Letter and Project Sketches

CONSULTING ENGINEERING & SCIENCE, INC.

Civil Engineers Coastal Engineers Environmental Scientists

July 2, 2008

Miami Dade County DERM
Class I Permitting Program
701 NW 1st Court
Miami FL, 33136

Re: Class I Standard Form Permit Application Number 2007 CLI PER 00048 by Ward International Trading Company I, LLC to Install One Hundred Thirty (130) Linear Feet of New Concrete Seawall, Backfill Five Hundred Fifty (550) Square Feet of Tidal Waters Within the Miami River, and Install a Four Hundred Forty (440) Square Foot Marginal Wood Dock, and Acceptance of a Restrictive Covenant Running with the Land in Favor of Miami-Dade County

By the attached Class I Standard Form permit application with supporting documents, I, Richard B. Bochnovich, P.E., Senior Vice President of Consulting Engineering & Science, Inc. am the permit applicant/applicant's authorized agent (circle one) and hereby request permission to perform the following: Install One Hundred Thirty (130) Linear Feet of New Concrete Seawall, Backfill Five Hundred Fifty (550) Square Feet of Tidal Waters Within the Miami River, and Install a Four Hundred Forty (440) Square Foot Marginal Wood Dock, and Acceptance of a Restrictive Covenant Running with the Land in Favor of Miami-Dade County. I understand that a Miami-Dade County Class I Standard Form Permit is required to perform this work.

If approval is granted for the proposed work by the Board of County Commissioners, complete and detailed plans and calculations of the proposed work shall be prepared by an engineer registered/licensed in the State of Florida in accordance with the minimum requirements of Chapter 24 of the Code of Miami-Dade County, Florida. Said plans and calculations shall be subject to the review and approval of the Department of Environmental Resources Management. The permit applicant will secure the services of an engineer registered/licensed in the State of Florida to conduct inspections throughout the construction period, and said engineer shall prepare all required drawings of record. In the event that the proposed work which is the subject of this Class I Permit application involves the cutting or trimming of a mangrove tree(s), a detailed plan of the proposed cutting or trimming shall be prepared by a licensed landscape architect and submitted to the Department for review and approval, and the permit applicant will secure the services of a licensed landscape architect to supervise the trimming or cutting.

Respectfully submitted,

Richard B. Bochnovich

Richard B. Bochnovich, Senior Vice President
Consulting Engineering & Science, Inc.
Applicant's Authorized Agent

10700 N. Kendall Drive, Suite 400 • Miami, Florida 33176 • Phone: (305)378-5555 • Fax: (305) 279-4553

CONSULTING ENGINEERING & SCIENCE, INC.

Civil Engineers **Coastal Engineers** **Environmental Scientists**

August 15, 2008

Miami-Dade County DERM
Class I Permitting Program
701 NW 1st Court
Miami FL, 33136

RE: Class I Standard Form Permit Application Number 2007 CLI PER 00048 by Ward International Trading Company I, LLC to Install One Hundred Thirty (130) Linear Feet of New Concrete Seawall, Backfill Five Hundred Fifty (550) Square Feet of Tidal Waters Within the Miami River, and Install a Four Hundred Forty (440) Square Foot Marginal Wood Dock, and Acceptance of a Restrictive Covenant Running with the Land in Favor of Miami-Dade County

Ladies and Gentlemen:

This letter will certify that I am an engineer registered/licensed in the State of Florida, qualified by education and experience in the area of construction, and that to the best of my knowledge and belief, the proposed work does not violate any laws of the State of Florida or any provision of the Code of Miami Dade County which may be applicable, that diligence and recognized standard practices of the engineering profession have been exercised in the engineer's design process for the proposed work, and in my opinion based upon my knowledge and belief, the following will not occur:

a. Harmful obstruction or undesirable alteration of the natural flow of the water within the area of the proposed work.

b. Harmful or increased erosion, shoaling of channels or stagnant areas of water. (Not applicable to Class IV permits)

c. Material injury to adjacent property.

Further, I have been retained by the applicant to provide inspections throughout the construction period and to prepare a set of reproducible record prints of drawings showing changes made during the construction process based upon the marked-up prints, drawings, and other data furnished by the contractor to me.

Very truly yours,

CONSULTING ENGINEERING & SCIENCE, INC.

Richard B. Bochnovich

Richard B. Bochnovich, P.E.
Senior Vice President
P.E. #19833

10700 N. Kendall Drive, Suite 400 • Miami, Florida 33176 • Phone: (305)378-5555 • Fax: (305) 279-4553

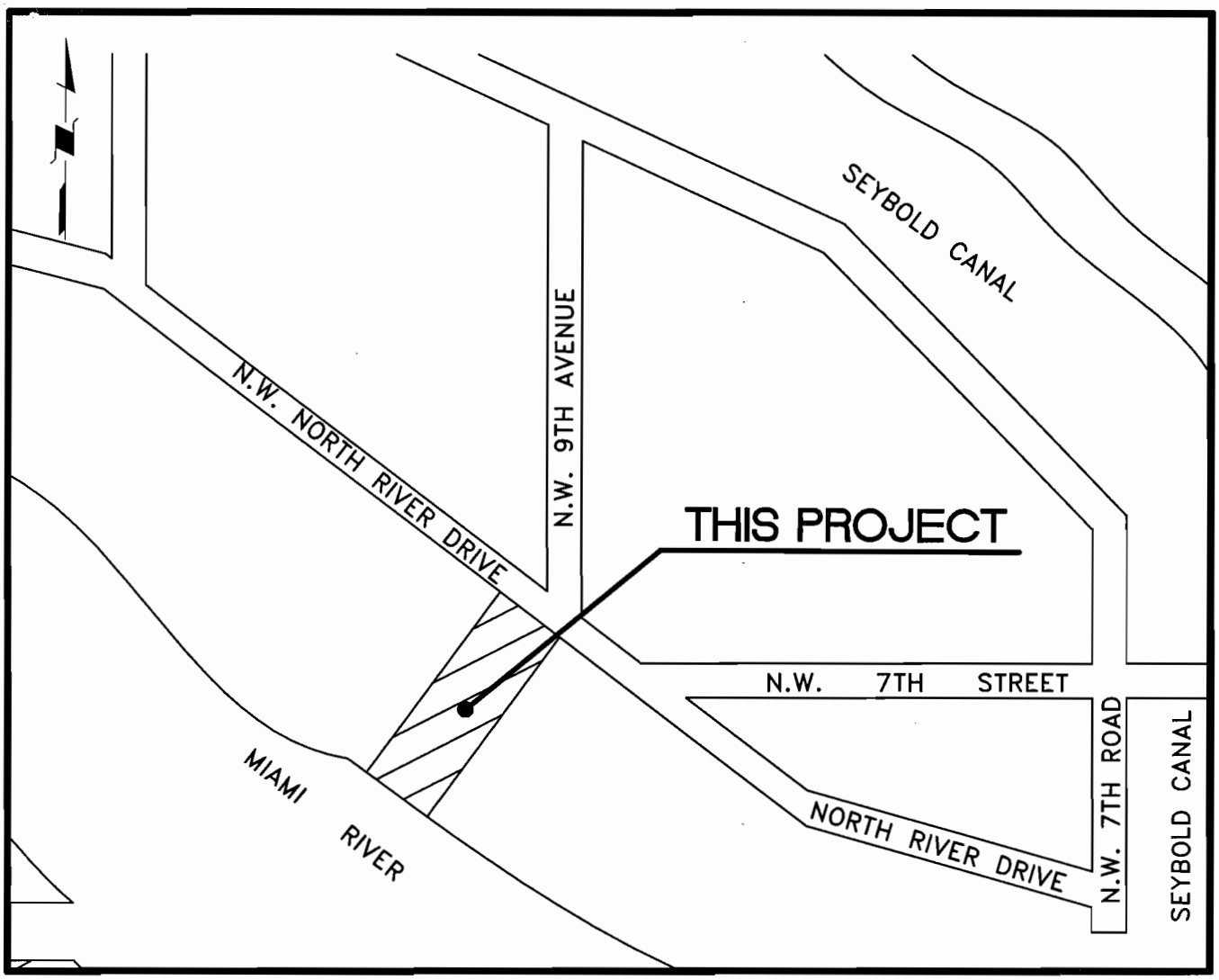

VICINITY MAP

INDEX

SHT. No.	TITLE
1	VICINITY MAP & INDEX OF DRAWINGS
2	EXISTING CONDITIONS PLAN
3	OVERALL SITE PLAN
4	PROPOSED SEAWALL & DOCK PLAN
5	PROPOSED SEAWALL SECTION
6	PROPOSED MARGINAL DOCK SECTION

NOT TO SCALE

PURPOSE: VICINITY MAP & INDEX OF DRAWINGS
DATUM: N.G.V.D.
PREPARED BY:
Consulting Engineering & Science, Inc.
8925 S.W. 148th Street, Suite 100
Miami, Florida 33176

COUNTY OF MIAMI-DADE, STATE OF FLORIDA
APPLICATION BY:
Ward International Trading Company I, LLC
132 Minorca Avenue
Coral Gables, Florida 33134

SHEET 1 OF 6 DATE: 12-04-06

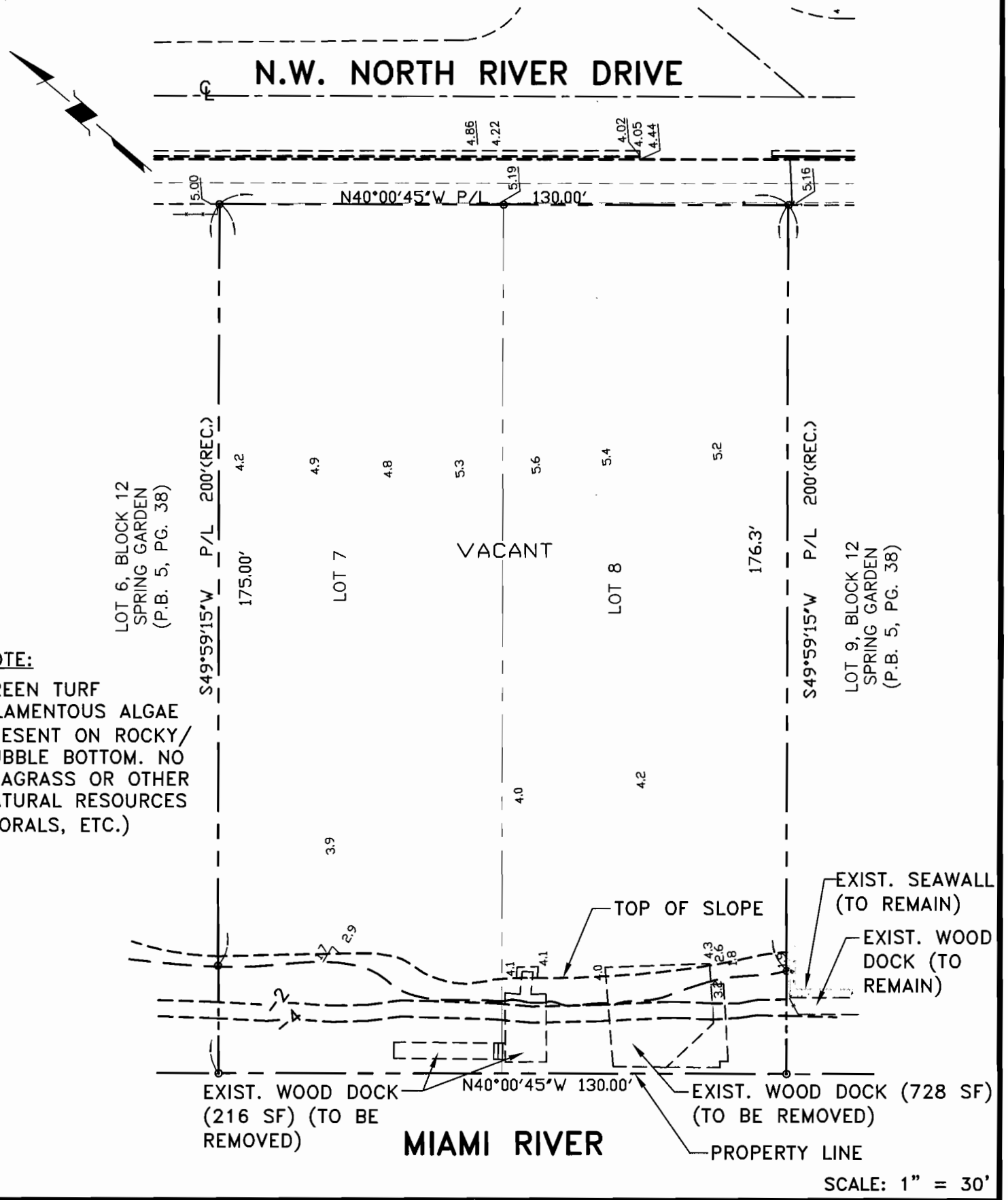

NOTE:

GREEN TURF FILAMENTOUS ALGAE PRESENT ON ROCKY/ RUBBLE BOTTOM. NO SEAGRASS OR OTHER NATURAL RESOURCES (CORALS, ETC.)

PURPOSE: EXISTING CONDITIONS PLAN
DATUM: N.G.V.D.
PREPARED BY:
Consulting Engineering & Science, Inc.
8925 S.W. 148th Street, Suite 100
Miami, Florida 33176

COUNTY OF MIAMI-DADE, STATE OF FLORIDA
APPLICATION BY:
Ward International Trading Company I, LLC
132 Minorca Avenue
Coral Gables, Florida 33134

22

SHEET 2 OF 6

REV: 08-17-07
DATE: 12-04-06

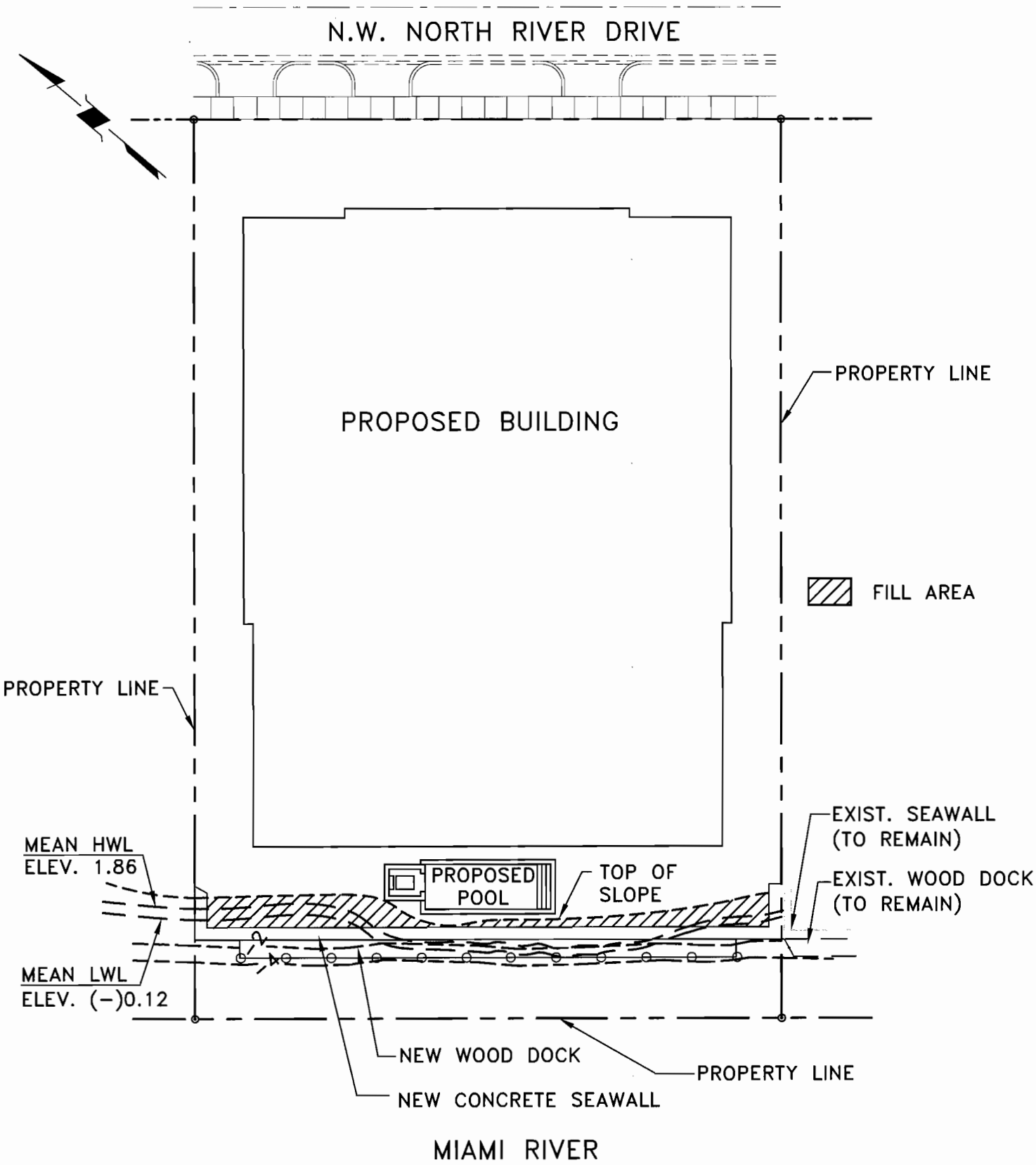

SCALE: 1" = 30'

PURPOSE: OVERALL SITE PLAN
DATUM: N.G.V.D.
PREPARED BY:
Consulting Engineering & Science, Inc.
8925 S.W. 148th Street, Suite 100
Miami, Florida 33176

23

COUNTY OF MIAMI-DADE, STATE OF FLORIDA
APPLICATION BY:
Ward International Trading Company I, LLC
132 Minorca Avenue
Coral Gables, Florida 33134

SHEET 3 OF 6

REV: 01-17-08
REV: 08-17-07
DATE: 12-04-06

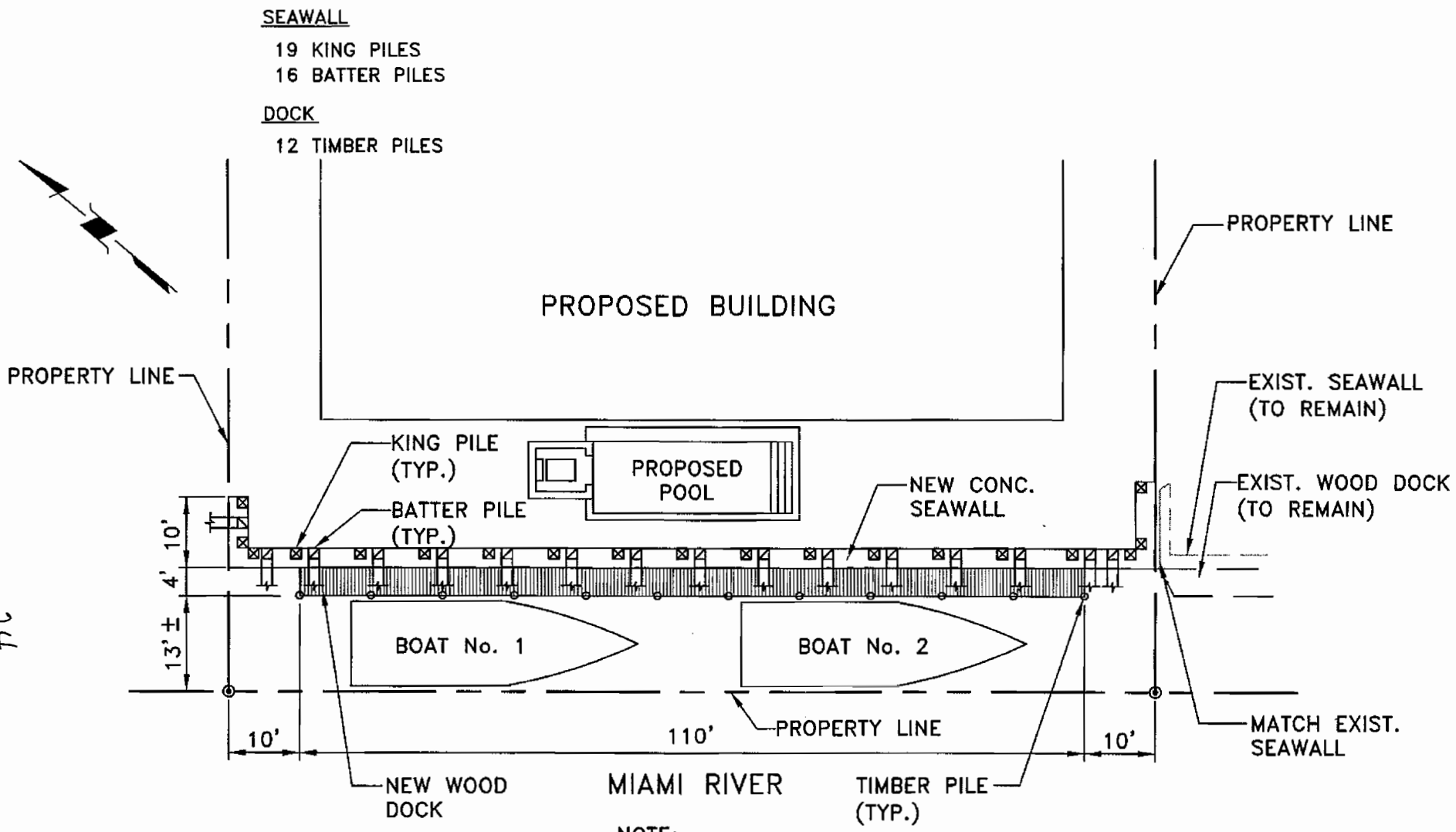

NOTE:
BOATS TO BE 40 TO 50 FEET IN LENGTH W/MAXIMUM BEAM WIDTH OF 12 FEET AND MAXIMUM DRAFT OF 2.5 FT.

MEAN HWL = ELEV. 1.86
MEAN LWL = ELEV. (−)0.12

SCALE: 1" = 20'

PURPOSE: PROPOSED SEAWALL & DOCK PLAN
DATUM: N.G.V.D.
PREPARED BY:
Consulting Engineering & Science, Inc.
8925 S.W. 148th Street, Suite 100
Miami, Florida 33176

COUNTY OF MIAMI-DADE, STATE OF FLORIDA
APPLICATION BY:
Ward International Trading Company I, LLC
132 Minorca Avenue
Coral Gables, Florida 33134

REV: 05-16-08
REV: 01-17-08
REV: 08-17-07
DATE: 12-04-06

SHEET 4 OF 6

34

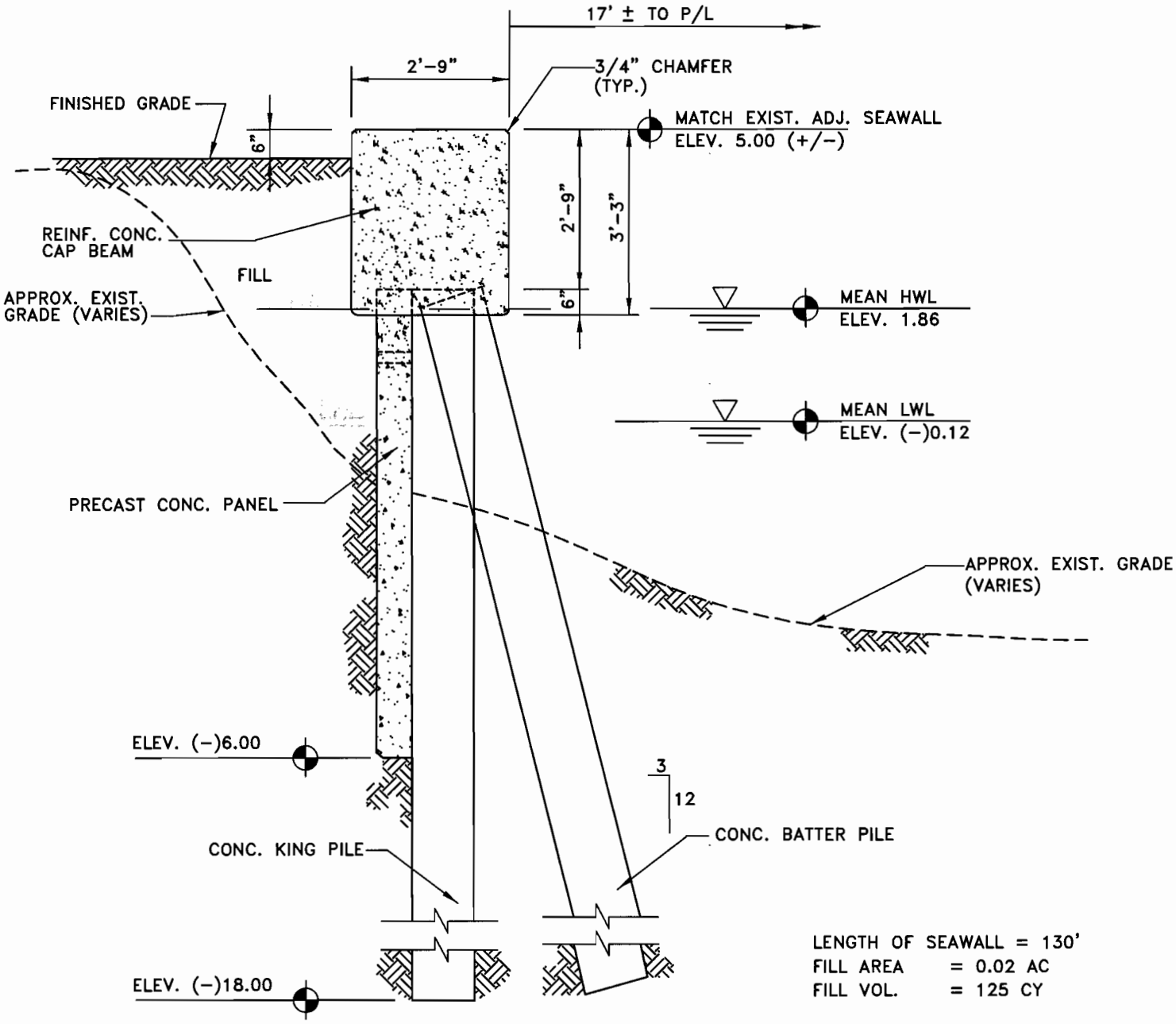

PROPOSED SEAWALL SECTION

SCALE: 3/8" = 1'-0"

PURPOSE: PROPOSED MARGINAL SEAWALL SECTION
DATUM: N.G.V.D.
PREPARED BY:
Consulting Engineering & Science, Inc.
8925 S.W. 148th Street, Suite 100
Miami, Florida 33176

COUNTY OF MIAMI-DADE, STATE OF FLORIDA
APPLICATION BY:
Ward International Trading Company I, LLC
132 Minorca Avenue
Coral Gables, Florida 33134

25

SHEET 5 OF 6

REV: 08-17-07
DATE: 12-04-06

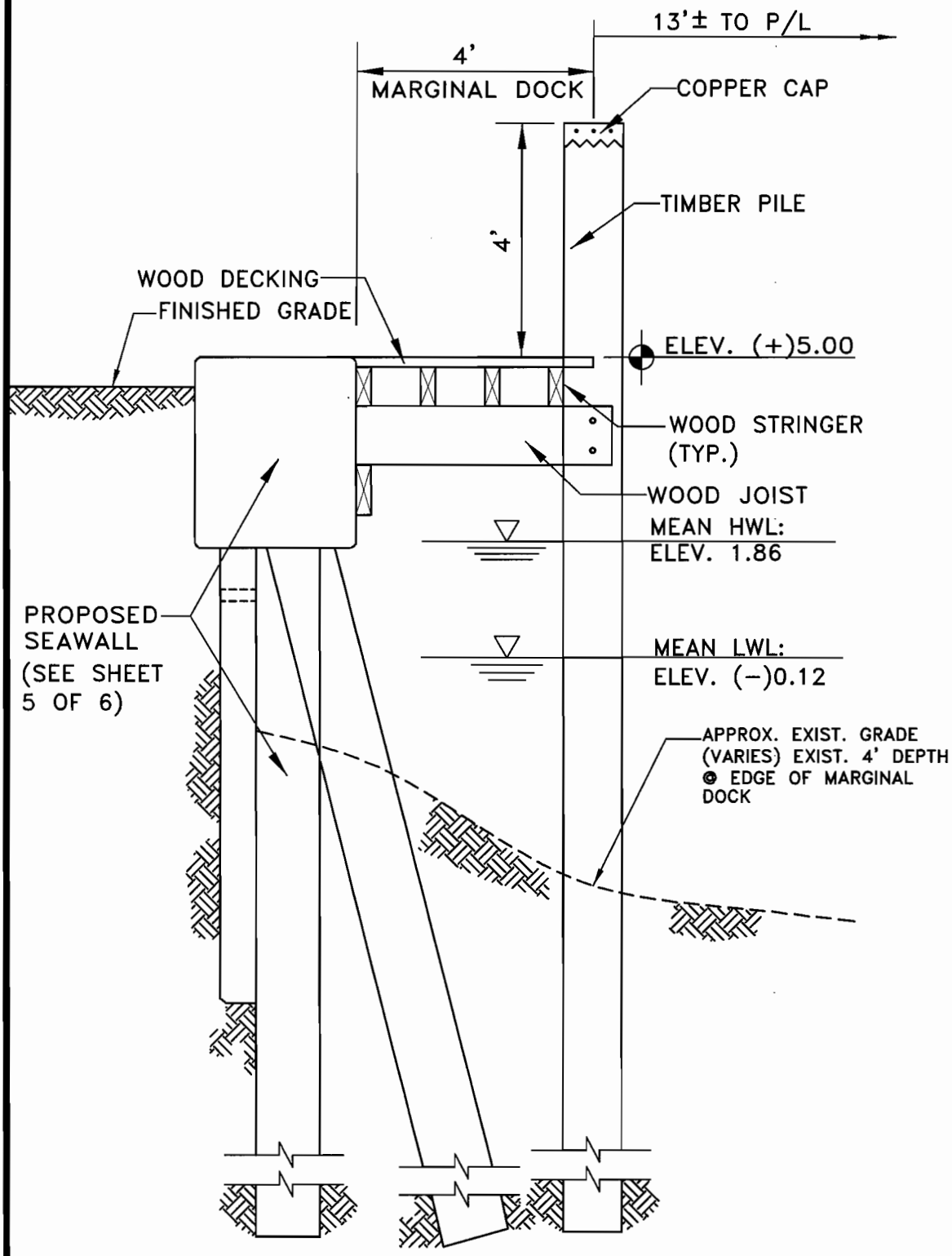

PROPOSED MARGINAL DOCK SECTION

SCALE: 3/8" = 1'-0"

PURPOSE: PROPOSED MARGINAL DOCK SECTION
DATUM: N.G.V.D.
PREPARED BY:
Consulting Engineering & Science, Inc.
8925 S.W. 148th Street, Suite 100
Miami, Florida 33176

COUNTY OF MIAMI-DADE, STATE OF FLORIDA
APPLICATION BY:
Ward International Trading Company I, LLC
132 Minorca Avenue
Coral Gables, Florida 33134

REV: 01-17-08
REV: 08-17-07
DATE: 12-04-06

SHEET 6 OF 6

Attachment E

Zoning Memorandum

Memorandum

MIAMI-DADE COUNTY

Date: July 22, 2008

To: Lisa M. Spadafina, Manager
Coastal Resources Section
Environmental Resources Management

From: Christine D. Hopps, Biologist II
Coastal Resources Section
Environmental Resources Management

Subject: Class I Permit Application by Ward International Trading Company I, LLC to Install One Hundred Thirty (130) Linear Feet of New Concrete Seawall, Backfill Five Hundred Fifty (550) Square Feet of Tidal Waters Within the Miami River and Install a Four Hundred Forty (440) Square Foot Marginal Wood Dock.

Pursuant to Section 24-48.2(II)(A)(7), Code of Miami-Dade County, Florida, a substantiating letter shall be submitted by the applicants stating that the proposed project does not violate any zoning laws. Said letter will be submitted after approval by the Miami-Dade County Board of County Commissioners and prior to issuance of the Class I Permit.

Attachment F

Names and Addresses of Owners of All Riparian or Wetland Property Within Three Hundred (300) Feet of the Proposed Work

1	Folio No.:	01-3135-027-1220
	Property:	720 NW NORTH RIVER DR
	Mailing Address:	WARD INTL TRADING CO I LLC 132 MINORCA AVE CORAL GABLES FL 33134-4510
2	Folio No.:	01-3135-027-1210
	Property:	734 NW N RIVER DR
	Mailing Address:	TERRY B CONNER &W DIANE L 972 NW N RIVER DR MIAMI FL 33136-3020
3	Folio No.:	01-3135-027-1200
	Property:	750 NW NORTH RIVER DR
	Mailing Address:	SANDSTON DEVELOPMENT CORP 6600 W BROAD ST STE 100 RICHMOND VA 23230-
4	Folio No.:	01-3135-027-1190
	Property:	760 NW NORTH RIVER DR
	Mailing Address:	SANDSTON DEVELOPMENT CORP 6600 W BROAD ST STE 100 RICHMOND VA 23230-
5	Folio No.:	01-3135-073-0070
	Property:	978 NW N RIVER DR 7
	Mailing Address:	STEVEN P BEFERA 700 JERONIMO DR CORAL GABLES FL 33146-1269
6	Folio No.:	01-3135-073-0020
	Property:	978 NW N RIVER DR 2
	Mailing Address:	ADOLFO BETANCOURT &W JENNIFER G 978 NW N RIVER DR #2 MIAMI FL 33136-3037
7	Folio No.:	01-3135-073-0060
	Property:	978 NW N RIVER DR 6
	Mailing Address:	KARYL L BOYNTON 978 NW N RIVER DR #6 MIAMI FL 33136-3017
8	Folio No.:	01-3135-073-0010
	Property:	978 NW N RIVER DR 1
	Mailing Address:	MARIO HUGO COHAN 978 NW N RIVER DR #1 MIAMI FL 33136-3037
9	Folio No.:	01-3135-027-1240
	Property:	700 NW N RIVER DR
	Mailing Address:	TAYYAB ZAIDI 1200 NW 10 AVE MIAMI FL 33136-2206
10	Folio No.:	01-3135-027-1250
	Property:	678 NW N RIVER DR
	Mailing Address:	MICHAEL S BOWMAN & MARY K GAGEN 961 NW 7 ST MIAMI FL 33136-3705
11	Folio No.:	01-3135-027-1260
	Property:	668 NW N RIVER DR
	Mailing Address:	ROBERTO DE JONG & CARLOS DE ARAUJO 668 NW N RIVER DR MIAMI FL 33136-3014
12	Folio No.:	01-3135-027-1270
	Property:	654 NW N RIVER DR

	Mailing Address:	RIVERDREAMS LLC 7010 SW 48 LN MIAMI FL 33155-5602
13	Folio No.:	01-3135-031-0020
	Property:	961 NW 7 ST
	Mailing Address:	CREEK REALTY CO 961 NW 7 ST MIAMI FL 33136-3705
14	Folio No.:	01-3135-000-0020
	Property:	971 NW 7 ST
	Mailing Address:	CITY OF MIAMI-ANCHOR MAR ASSET MANAGEMENT DIVISION 444 SW 2 AVE STE #325 MIAMI FL 33130-1910
15	Folio No.:	01-4138-004-0080
	Property:	663 NW SOUTH RIVER DR
	Mailing Address:	RIVER MARINA LLC 6817 SW 81 TERR MIAMI FL 33143-7711
16	Folio No.:	01-4138-004-0090
	Property:	661 NW SOUTH RIVER DR
	Mailing Address:	RIVER MARINA LLC 6817 SW 81 TERR MIAMI FL 33143-7711
17	Folio No.:	01-4138-003-0180
	Property:	555 NW SOUTH RIVER DR
	Mailing Address:	RIVER MARINA LLC 6817 SW 81 TERR MIAMI FL 33143-7711
18	Folio No.:	01-4138-004-0010
	Property:	603 NW S RIVER DR
	Mailing Address:	RIVER MARINA LLC 6817 SW 81 TERR MIAMI FL 33143-7711
19	Folio No.:	01-3135-027-1280
	Property:	640 NW N RIVER DR
	Mailing Address:	ENIS RLTY LTD 10100 CORAL CREEK RD CORAL GABLES FL 33156-3423

Ward International Trading CO., LLC
132 Minorca Ave.
Coral Gables, Florida
33134-4510

Terry B Conner & W. Diane L.
972 NW North River Drive
Miami, Florida
33136-3020

Sandston Development Corporation
6600 W Broad Street. STE 100
Richmond , Virginia
23230

Steven P. Befera
700 Jeronimo Drive
Coral Gables, Florida 33146-1269

Adolfo Betancourt & W Jennifer G.
978 NW North River Drive #2
Miami, Florida
33136-3037

Karyl L. Boynton
978 NW North River Drive #6
Miami, Florida
33136-3017

Sandston Development Corporation
6600 W Broad Street. STE 100
Richmond , Virginia
23230

Mario Hugo Cohan
978 NW North River Drive #1
Miami, Florida
33136-3037

Tayyab Zaidi
1200 NW 10 Avenue
Miami, Florida
33136-2206

Michael S. Bowman & Mary K. Gagen
961 NW 7th Street
Miami, Florida
33136-3705

Roberto De Jong & Carlos De Araujo
668 NW North River Drive
Miami, Florida
33136-3014

RIVERDREAMS, LLC
7010 SW 48 Lane
Miami, Florida
33155-5602

Creek Realty Co.
961 NW 7th Street
Miami, Florida
33136-3705

City of Miami – Anchor MAR
Asset Management Division
444 SW 2nd Avenue STE #325
Miami, Florida
33130-1910

River Marina, LLC
6817 SW 81 Terrace
Miami, Florida
33143-7711

River Marina, LLC
6817 SW 81 Terrace
Miami, Florida
33143-7711

Enis Realty Limited
10100 Coral Creek Road
Coral Gables, Florida
33156-3423

Attachment G

Turbidity Control Plan

Turbidity Monitoring Plan
for Ward International Trading Company I, LLC (Miami River Place)

The contractor will be required to meet all applicable State water quality standards during construction activities and will take all necessary measures to control turbidity. These measures may include the use of turbidity barriers, silt fences, timing construction activities with tidal cycles, modifications to equipment, reducing operating speeds or ceasing operations completely if necessary. Turbidity barriers will not be constructed of materials in which manatees may become trapped. It is not anticipated that there will be any significant impact due to sedimentation or water quality degradation during construction activities.

In order to meet State water quality standards set for the Miami River, we request the use of a minimum 100-meter mixing zone. To ensure compliance, the contractor will be responsible for adhering to the following turbidity monitoring plan:

Prior to construction activities, "background" and "compliance" water quality monitoring stations will be established. One background sampling station will be established at least 150 meters up-current of the work area, outside the influence of any construction activities. One compliance sampling location will be established at 100 meters down-current of the work area (i.e. at the edge of the proposed mixing zone), within the densest portion of any visible turbidity plume. *NOTE: Up-current and down-current determination shall be based on the tidal stage and water flow direction; therefore, one "background" and one "compliance" station will be established upstream and downstream within the Miami River for a total of two stations for each.*

Turbidity will be monitored, using a Nephelometer or comparable in-situ turbidity monitoring instrument calibrated and maintained per the manufacturer's specifications, at both "background" and "compliance" locations every 4 hours during all in-water construction activities, beginning one-hour after commencement of construction. During each sample collection event (background and compliance), samples shall be collected at the following three levels of the water column: 1) one-foot below the surface, 2) mid-depth, and 3) one-foot above the bottom.

The compliance location, given the above, shall be considered the limit of the temporary mixing zone for turbidity allowed for construction. The permittee shall provide the appropriate agencies with a report, via fax, on the same day that an exceedence occurred, providing the following information for each sampling event when the compliance sample exceeded background levels:

10700 N. Kendall Drive, Suite 400 • Miami, Florida 33176 • Phone: (305)378-5555 • Fax: (305) 279-4553

1) Permit number;
2) Project name;
3) The sample collection date, time, location, and depth; water depth; tidal stage and direction of flow for the sample(s) that exceeded background levels (for all three sample depths) – include the turbidity results;
4) The time that the work was shut down and a description of what was done to remediate the situation;
5) The sample collection date, time, location, and depth; water depth; tidal stage and direction of flow for the samples that documented that compliance samples no longer exceeded background levels (for all three sample depths) – include the turbidity results;
6) The time that work resumed; &
7) Nephelometer calibration logs.

In addition, monthly monitoring reports containing all of the monitoring data will be submitted to the appropriated agencies with documents containing the following information:

a) Permit number;
b) Project name;
c) Dates of sampling and analysis;
d) Time of day samples were taken;
e) Depth of water body;
f) Depth of sample;
g) Antecedent weather conditions;
h) Tidal stage and direction of flow;
i) Wind direction and velocity;
j) A statement describing the methods used in collection, handling, storage and analysis of the samples;
k) A map indicating the sampling locations;
l) A statement by the individual responsible for the implementation of the sampling program attesting to the authenticity, precision, limits of detection, and accuracy of the data;
m) Turbidity sample results; &
n) Nephelometer calibration logs.

If monitoring reveals that turbidity levels at the compliance locations are greater than background, all construction activities shall cease immediately and shall not resume until corrective measures have been taken, and turbidity has returned to background levels (based on turbidity sampling results). If exceedences of background turbidity occur frequently, construction activities shall be limited to slack and incoming tides.

A final report within 30 days of completion of construction will be submitted to the appropriate agencies which includes the following information: 1) the dates of commencement and completion of construction activities; 2) a description of the in-water construction – locations, methods, and equipment used; 3) tables of turbidity data collected at the site which lists the date each sample was collected in one column, the value of every background sample collected at a

given depth in a second column, the value of every compliance sample collected at a given depth in a third column; 4) the difference between the background and compliance values in a fourth column; and 5) a statement identifying any violations of the turbidity standard which occurred during the event, the probable cause of the violation, and the corrective measure(s) taken to reduce turbidity.

Attachment H

Restrictive Covenant Running with the Land in Favor of Miami-Dade County

RESTRICTIVE COVENANT RUNNING WITH THE LAND IN FAVOR OF MIAMI-DADE COUNTY

The undersigned, Saeid Mazaheri, Manager/Member, Ward International Trading Co., I, LLC being the present owner(s) of the following real property (hereinafter called "the Property"), lying, being and situated in Miami-Dade County, Florida, to wit:

> Lots 7 and 8, Block 12, of SPRING GARDEN, according to the Plat thereof, as recorded in Plat Book 5, at Page 38, of the Public Records of Miami-Dade County, Florida

pursuant to Section 24-48.2(I) (B) (2) (b) of the Code of Miami-Dade County, Florida hereby proffers this executed Restrictive Covenant Running With The Land in Favor of Miami-Dade County, Florida as part of Miami-Dade County Department of Environmental Resources Management Class I Permit Application Number 2007 CLI-PER 00048:

1. For the purposes of this Restrictive Covenant, "vessel" is herein defined as any water craft designed to float or navigate on water, including, but not limited to: sailboats, powerboats, rowboats, ships, boats, skiffs, houseboats, and inflatable boats.

2. For the purposes of this Restrictive Covenant, a "sailboat" is herein defined as any vessel with a displacement type hull designed to be propelled primarily by wind and if equipped with an auxiliary motor the vessel shall have only a single propeller. For the purposes of this Restrictive Covenant, a "powerboat" is herein defined as any vessel that is not a sailboat, provided it is equipped to be propelled with an engine.

3. For the purposes of this Restrictive Covenant, "docking facilities" is herein defined as a place where vessels may be moored or secured to a fixed or floating structure or to the shoreline and includes a place where vessels may be stored on the uplands at the Property if a means of placing or launching vessels into the water exists at the Property.

4. The undersigned agree(s) and covenant(s) that the maximum number of powerboats which shall be moored, secured, or stored at the docking facilities located at the Property at any one time is two (2) powerboats. This provision shall not apply to any rowboat, skiff or inflatable boat with an engine having a capacity of five (5) horsepower or less. This provision also shall not apply to any auxiliary vessel. "Auxiliary vessel" is herein defined as any watercraft which is associated, by ownership, design and common usage, with a primary vessel moored at the Property and which is affixed to, carried by, and stored on the primary vessel including, but not limited to, runabouts, tenders, and personal watercraft.

5. The undersigned agree(s) and covenant(s) that approval of this Restrictive Covenant neither authorizes nor constitutes a permit of any kind for the mooring or storage of any vessels at the Property or for the construction of any docking facilities at the Property.

6. The undersigned agree(s) and covenant(s) that only those vessels owned by persons who own or lease a dwelling unit or commercial office on the Property shall be moored, secured, or stored at the docking facilities at the Property. Dwelling unit shall mean any room or group of rooms located within a dwelling and forming a single habitable unit with facilities used for or intended to be used for living, sleeping, cooking and eating. For the purposes of this Restrictive Covenant, a dwelling unit shall not include rooming units.

7. This Restrictive Covenant shall run with the land and shall be recorded in the Public Records of Miami-Dade County, Florida and shall remain in full force and effect and be binding upon the undersigned, and their heirs, successors, grantees and assigns until such time as the same is modified or released in writing by Miami-Dade County, Florida.

8. The undersigned agree(s) and covenant(s) that this Restrictive Covenant and the provisions contained herein may be enforced against any person permitting, allowing, letting, causing or suffering any violation of the terms of this Restrictive Covenant by the Department of Environmental Resources Management, or its successor, by temporary, permanent, prohibitory, and mandatory injunctive relief as well as otherwise provided by law or ordinance and also may include an action for and to recover civil penalties, damages, costs and expenses, and attorney's fees in favor of Miami-Dade County against said person(s) as authorized by law or ordinance. All of the remedies provided herein shall be deemed to be independent and cumulative and shall be deemed to be supplemental to any remedies provided by law or ordinance.

IN WITNESS WHEREOF, the undersigned have caused this Covenant to be executed this 7 day of July, 2008.

Witnesses:

sign
print FERNANDO ORTIZ
sign
print MIRTA JOLOJOSKY

Property Owner

sign
print WARD INTERNATIONAL TRADING CO. I, LLC
Title MANAGER / MEMBER
Address 132 MINORCA AVENUE
CORAL GABLES, FL 33134

STATE OF FLORIDA, COUNTY OF DADE

The foregoing instrument was acknowledged before me this 7th day of JULY, 2008. by SAEID MAZAHERI as MANAGER/MEMBER, who is personally known to me or who has produced _____ as identification and who did take an oath.

NOTARY PUBLIC:

sign
print GRIZEL GIL

State of Florida at Large (Seal)
My Commission Expires:

Notary Public State of Florida
Grizel Gil
My Commission DD492368
Expires 01/21/2010

Attachment I

Project Report

PROJECT REPORT

CLASS I PERMIT APPLICATION NO. 2007 CLI -PER 00048

WARD INTERNATIONAL TRADING COMPANY I, LLC, FOR A CLASS I PERMIT TO INSTALL ONE HUNDRED THIRTY (130) LINEAR FEET OF NEW CONCRETE SEAWALL, BACKFILL FIVE HUNDRED FIFTY (550) SQUARE FEET OF TIDAL WATERS WITHIN THE MIAMI RIVER AND INSTALL A FOUR HUNDRED FORTY (440) SQUARE FOOT MARGINAL WOOD DOCK AND ACCEPTANCE OF A RESTRICTIVE COVENANT RUNNING WITH THE LAND IN FAVOR OF MIAMI-DADE COUNTY.

Date: July 28, 2008

Staff's recommendation of approval for the above-referenced permit application is based on the applicable evaluation factors under Section 24-48.3 of the Code of Miami-Dade County, Florida. The following is a summary of the proposed project with respect to each applicable evaluation factor:

1. **Potential Adverse Environmental Impact** – The potential for any adverse environmental impacts from installation of one hundred thirty (130) linear feet of new concrete seawall, backfilling five hundred fifty (550) square feet of tidal waters within the Miami River and installation a four hundred forty (440) square foot marginal wood dock will be minimized to the maximum extent practicable. The proposed project is located within an area identified by the Miami-Dade County Manatee Protection Plan (MPP) as essential manatee habitat for the West Indian Manatee (*Trichechus manatus*). The applicant is proposing the construction of a dock at a proposed multifamily residence that will accommodate two (2) powerboat slips. This use is consistent with the recommendations of the MPP. In addition, the Class I Permit shall have conditions to minimize turbidity, and protect rare, threatened and endangered species.

2. **Potential Cumulative Adverse Environmental Impact** – Not applicable.

3. **Hydrology** - The proposed project, as designed, is not reasonably expected to adversely affect surface water drainage or retention of stormwater.

4. **Water Quality** – The proposed project is expected to temporarily affect surface water quality during the construction phase of the project, however these impacts will be minimized to the maximum extent practicable by the implementation of proper turbidity control devices. The Class I Permit will require the applicants to employ appropriate turbidity control devices such as, but not limited to, turbidity curtains during all phases of construction (see Attachment G).

5. **Wellfields** – Not applicable.

6. **Water Supply** – Not applicable.

7. **Aquifer Recharge** – Not applicable.

8. **Aesthetics** – The proposed project is not reasonably expected to have negative aesthetic impacts. However, during the construction process there may be temporary aesthetic impacts related to the presence of barges and other vessels associated with the construction activities.

9. **Navigation** –The proposed project is not reasonably expected to adversely affect navigation.

10. **Public Health** - The proposed project is not reasonably expected to adversely affect public health.

11. **Historic Values**- The proposed project is not reasonably expected to adversely affect historic values.

12. **Archaeological Values** - The proposed project is located in an area of potential archaeological significance. The Class I permit will require that the work be reviewed by the Miami-Dade County Archaeologist prior to commencement in order to ensure that work is adequately monitored and that adverse impacts to archaeological resources, if any, are avoided. If archaeological artifacts or features are discovered during the project, the contractor and permittee shall cease and desist all activities, and perform whatever remedial or avoidance measures are deemed appropriate by the County Archaeologist.

13. **Air Quality** – The proposed project is not reasonably expected to adversely affect air quality.

14. **Marine and Wildlife Habitats**– The proposed project will cause temporary disturbances of the benthic soils located adjacent to the existing shoreline, and permanent coverage of the benthic soils located in the area to be filled. Although the soils may support limited numbers of marine infauna (i.e. benthic fauna living within the substrate), the soils do not support any significant marine resources. Mitigation for unavoidable impacts associated with filling of tidal waters and decreased water quality will be provided by the applicant by the placement of one hundred thirty-seven point five (137.5) cubic yards of natural limerock riprap boulders at an approved artificial reef site within Biscayne Bay.

    The proposed project is located within an area identified by the Miami-Dade County Manatee Protection Plan (MPP) as essential manatee habitat for the West Indian Manatee (*Trichechus manatus*). The applicant is proposing the construction of a dock at a proposed multifamily residence that will accommodate two (2) powerboat slips. This use is consistent with the recommendations of the MPP. In addition, the Class I Permit shall have conditions to minimize turbidity, and protect rare, threatened and endangered species.

15. **Wetland Soils Suitable for Habitat** – There are no wetland soils suitable for habitat in the footprint of the proposed work.

16. **Floral Values** –The proposed project is not reasonably expected to affect marine flora.

17. **Fauna Values** - The proposed project may cause temporary impacts to marine fauna resulting from turbidity as a result of the installation of the concrete seawall and the filling of the tidal waters between the new seawall and the existing uplands. However these impacts will be minimized to the maximum extent practicable by the implementation of proper turbidity control devices. The Class I Permit will require the applicants to employ appropriate turbidity control devices such as, but not limited to, turbidity curtains during all phases of construction.

    The proposed project is located within an area identified by the Miami-Dade County Manatee Protection Plan (MPP) as essential manatee habitat for the West Indian Manatee (*Trichechus manatus*). The applicant is proposing the construction of a dock at a proposed multifamily residence that will accommodate two (2) powerboat slips. This use is consistent with the recommendations of the MPP. In addition, the Class I Permit shall have conditions to minimize turbidity, and protect rare, threatened and endangered species.

18. **Rare, Threatened and Endangered Species** –The proposed project is not reasonably expected to adversely affect any rare, threatened or endangered species provided standard manatee protection measures are implemented. The proposed project is located within an area identified by the Miami-Dade County Manatee Protection Plan (MPP) as essential manatee habitat for the West Indian Manatee (*Trichechus manatus*). The applicant is proposing the construction of a dock at a proposed multifamily residence that will accommodate two (2) powerboat slips. This use is consistent with the recommendations of the MPP. In addition, the Class I Permit shall have conditions to minimize turbidity, and protect rare, threatened and endangered species. The Class I Permit will also require that all standard manatee construction conditions shall be followed during all in-water construction operations.

19. **Natural Flood Damage Protection** - The proposed project is not reasonably expected to adversely affect surface water drainage or retention of stormwater.

20. **Wetland Values** - The proposed project does not involve dredging or filling of wetlands.

21. **Land Use Classification** – Pursuant to Section 24-48.2(II)(A)(7), of the Code of Miami-Dade County, Florida, a substantiating letter shall be submitted stating that the proposed project does not violate any zoning laws. Said letter will be submitted after the approval by the Board of County Commissioners and prior to the issuance of a Class I Permit.

22. **Recreation** - The proposed project does not conflict with the recreation element of the Miami-Dade County Comprehensive Development Master Plan and recreation element of the Biscayne Bay Management Plan.

23. **Other Environmental Values Affecting the Public Interest** – The proposed project is not reasonably expected to adversely affect environmental values affecting the public interest.

24. **Conformance with Standard Construction Procedures and Practices and Design and Performance Standards** – The proposed project complies with the standard construction procedures and practices and design and performance standards of the applicable portions of the following:

    a) Miami-Dade County Public Works Manual
    b) Biscayne Bay Management Plan (Section 33D-1 through 33-D-4 of the Code of Miami-Dade County)
    c) Chapter 33B of the Code of Miami-Dade County

25. **Comprehensive Environmental Impact Statement (CEIS)** - In the opinion of the Director, the proposed project will result in neither adverse environmental impacts nor cumulative adverse environmental impacts. Therefore, a CEIS was not required by DERM to evaluate the project.

26. **Conformance with All Applicable Federal, State and Local Laws and Regulations** - The proposed project is in conformance with the following applicable State, Federal and local laws and regulations:

    a) Chapter 24 of the Code of Miami-Dade County
    b) United States Clean Water Act (Army Corps of Engineers permit is required)
    c) Rule 40E-4, Florida Administrative Code (FAC) (South Florida Water Management District permit is required)

27. **Conformance with the Miami-Dade County Comprehensive Development Master Plan (CDMP)** - In the opinion of DERM, the proposed project is in conformance with the CDMP. The following is a summary of the proposed project as it relates to the CDMP:

LAND USE ELEMENT I:

Objective 2/Policy 2A - Level of Service. The proposed project does not involve new or significant expansion of existing urban land uses.

Objective 3/Policies 3A, 3B, 3C - Protection of natural resources and systems. – The proposed project is consistent with the Conservation and Coastal Management Elements of the CDMP. The project is compatible with surrounding land uses in Biscayne Bay and does not involve development in the Big Cypress area of Critical State concern or the East Everglades.

TRANSPORTATION ELEMENT II

Aviation Subelement/Objective 9 - Aviation System Expansion - There is no aviation element to the proposed project.

Port of Miami River Subelement/Objective 3 - Minimization of impacts to estuarine water quality and marine resources. The Class I Permit will include conditions that require the applicant to use turbidity controls and best management practices to minimize any impacts that may occur. In addition, a performance bond shall be held to ensure compliance with said conditions.

CONSERVATION, AQUIFER RECHARGES AND DRAINAGE ELEMENT IV:

Objective 3/Policys 3A, 3B, 3D - Wellfield protection area protection. - The proposed project is not located within a wellfield protection area.

Objective 3/Policy 3E - Limestone mining within the area bounded by the Florida Turnpike, the Miami-Dade/Broward Levee, N.W. 12 Street and Okeechobee Road. - The proposed project is not located within this area.

Objective 4/Policys 4A, 4B, 4C - Water storage, aquifer recharge potential and maintenance of natural surface water drainage. - The proposed project will not adversely affect water storage, aquifer recharge potential or natural surface water drainage. The proposed project does not involve positive drainage of wetland area and will not affect water storage or aquifer recharge potential.

Objective 5/Policies 5A, 5B, 5F - Flood protection and cut and fill criteria. – The proposed project does not compromise flood protection, involve filling for development purposes, and is not related to cut and fill activities.

Objective 6/Policy 6A - Areas of highest suitability for mineral extraction. - The proposed project is not located in an area proposed or suitable for mineral extraction.

Objective 6/Policy 6B - Guidelines for rock quarries for the re-establishment of native flora and fauna. - The proposed project does not involve the dredging of a rock quarry.

Objective 6/Policy 6D - Suitable fill material for the support of development. – The proposed project does not involve filling for the purposes of development.

Objective 7/Policy 7A - No net loss of high quality, relatively unstressed wetlands. – The proposed project will not result in a net loss of any such wetlands.

Objective 9/Policys 9A, 9B, 9C - Protection of habitat critical to Federal or State-designated threatened or endangered species. – The proposed project is located in the Miami River, which is designated as essential habitat for the West Indian Manatee (*Trichechus manatus*) by the Miami-Dade County Manatee Protection Plan (MPP). The applicant is proposing the construction of a dock at a proposed multifamily residence that will accommodate two (2) powerboat slips. This use is consistent with the recommendations of the MPP. The proposed project is not reasonably expected to adversely affect any rare, threatened or endangered species provided standard manatee protection measures are implemented. Therefore, the Class I Permit will require that all standard manatee construction permit conditions shall be followed during all in-water construction operations.

COASTAL MANAGEMENT ELEMENT VII:

Objective 1/Policy 1A - Tidally connected mangroves in mangrove protection areas – There are no mangroves in the project area and the project is not located within a designated "Mangrove Protection Area."

Objective 1/ Policy 1B - Natural surface flow into and through coastal wetlands. – The project will not affect natural surface flow into and through coastal wetlands.

Objective 1/ Policy 1C - Elevated boardwalk access through mangroves. – The project does not involve access through a Mangrove Protection Area.

Objective 1/Policy 1D - Protection and maintenance of mangrove forests and related natural vegetational communities. - The proposed project does not involve work in mangrove forests, coastal hammock, or other natural vegetational communities.

Objective 1/Policy 1E - Mitigation for the degradation and destruction of coastal wetlands. Monitoring and maintenance of mitigation areas. – The proposed project does not involve the degradation and destruction of coastal wetlands and therefore does not involve monitoring of mitigation for impacts to coastal wetlands.

Objective 1/Policy 1G - Prohibition on dredging or filling of grass/algal flats, hard bottom or other viable benthic communities, except as provided for in Chapter 24 of the Code of Miami-Dade County, Florida. – The project does not involve the dredging or filling of grass/algal flats, hard bottom or other viable benthic communities.

Objective 2/Policies 2A, 2B - Beach restoration and renourishment objectives. - The proposed project does not involve beach restoration or renourishment.

Objective 3/Policies 3E, 3F - Location of new cut and spoil areas for proper stabilization and minimization of damages. - The proposed project does not involve the development or identification of new cut or spoil areas.

Objective 5/Policy 5B - Existing and new areas for water-dependent uses. - The proposed project will enhance existing water-dependent use by replacing existing dilapidated structures currently located at the site with a functional dock which will allow for water access.

Objective 5/Policy 5D - Consistency with Chapter 33D, Miami-Dade County Code (shoreline access, environmental compatibility of shoreline development) - The proposed project does not require review by the Shoreline Development Review Committee.

Objective 5/Policy 5F - The siting of water dependent facilities. - The proposed project does not involve the creation of any new water dependent facilities.

28. **Conformance with Chapter 33B, Miami-Dade County Code** (East Everglades Zoning Overlay Ordinance) – The proposed project is not located within the East Everglades Area.

29. **Conformance with Miami-Dade County Ordinance 81-19** (Biscayne Bay Management Plan Section 33D-1 through 33D-4) - The proposed project is consistent with the Biscayne Bay Management Plan.

30. **Conformance with the Miami-Dade County Manatee Protection Plan -** The proposed project is located in the Miami River, which is designated as essential habitat for the West Indian Manatee (Trichechus manatus) by the Miami-Dade County Manatee Protection Plan (MPP). The applicant is proposing the construction of a dock at a proposed multifamily residence that will accommodate two (2) powerboat slips. This use is consistent with the recommendations of the MPP. The proposed project is not reasonably expected to adversely affect any rare, threatened or endangered species provided standard manatee protection measures are implemented. Therefore, the Class I Permit will require that all standard manatee construction permit conditions shall be followed during all in-water construction operations.

31. **Consistency with Miami-Dade County Criteria for Lake Excavation** – The proposed project does not involve lake excavation.

32. **Municipality Recommendation** – Pursuant to Section 24-48.2(II)(A)(7), Code of Miami-Dade County, Florida, a substantiating letter shall be submitted stating that the proposed project does not violate any zoning laws. Said letter will be submitted after the approval by the Board of County Commissioners and prior to the issuance of the Class I Permit.

33. **Coastal Resources Management Line** - A coastal resources management line was not required for the proposed project, pursuant to Section 24-48.2(II)(A)(10)(b) of the Code of Miami-Dade County, Florida.

34. **Maximum Protection of a Wetland's Hydrological and Biological Functions** – The proposed project is not expected to impact wetland hydrological and biological functions.

35. **Class I Permit Applications Proposing to Exceed the Boundaries Described in Section D-5.03(2)(a) of the Miami-Dade County Public Works Manual** – Not applicable

The proposed project was also evaluated for compliance with the standards contained in Section 24-48.3(2),(3), and (4) of the Code of Miami-Dade County, Florida. The following is a summary of how the standards relate to the proposed project:

24-48.3 (2) Dredging and Filling for Class I Permit - The Proposed project is consistent with two of the six dredge and fill criteria specified in Section 24-48.3(2):

- Minimum dredging and filling for the creation and maintenance of marinas, piers, docks, and attendant navigational channels.
- A physical modification to protect public or private property.

24-48.3 (3) Minimum Water Depth Required for Boat Slips Created by the Construction or Placement of Fixed or Floating Docks and Piers, Piles and Other Structures Requiring a Permit Under Article IV, Division 1 of Chapter 24 of the Code of Miami-Dade County – The proposed project is consistent with the water depth requirements set forth in Section 24-48.3(3) of the Code of Miami-Dade County

24-48.3 (4) Clean Fill in Wetlands – The proposed project does not involve placing clean fill in wetlands.

BASED ON THE FOREGOING, IT IS RECOMMENDED THAT A CLASS I PERMIT BE APPROVED.

Lisa. M. Spadafina, Manager
Coastal Resources Section

Christine D. Hopps, Biologist II
Coastal Resources Section