# Memorandum

MIAMI-DADE COUNTY

**Date:** October 7, 2008

Agenda Item No. 8(A)(1)(B)

**To:** Honorable Chairperson Bruno A. Barreiro
and Members, Board of County Commissioners

**From:** George M. Burgess
County Manager

**Subject:** Ratification of Acceptance and Execution of Railroad Reimbursement Agreement (RA) with the Florida Department of Transportation (FDOT), CSX Transportation, Inc. (CSXT) and County under Financial Project Number **41466015701**

---

## RECOMMENDATION

It is recommended that the Board approve the attached resolution ratifying the acceptance and execution, pursuant to provisions of the Aviation Department's Expedite Ordinance No. 95-64, codified as Section 2-285(6) of the Code of Miami-Dade County, of the attached Railroad Reimbursement Agreement (RA) No. 41466015701 among Miami-Dade County (County), the State of Florida Department of Transportation (FDOT), and CSX Transportation, Inc. (CSXT), for the reconstruction of railroad crossing devices at the railroad crossings at NW 42nd Court in connection with the necessary roadway improvements of NW 42nd Court from NW 18th Street to NW 20th Street (MDAD Project K001A).

## SCOPE

The project associated with this RA is located within District Six.

## FISCAL IMPACT

The estimated construction cost of the project is $286,231.00 and will be performed by CSXT and paid for by FDOT. After completion of the construction of the crossing signals, 50% of the cost of the maintenance of the signals, amounting to approximately $1,573.00 based on the estimated total annual maintenance cost of $3,146.00, shall be paid by the County's Aviation Department in accordance with the Schedule of Annual Cost of Automatic Highway Grade Crossing Traffic Control devices as attached in the exhibit to the RA.

## PROJECT MONITOR

This Railroad Reimbursable Agreement will be managed by Jose A. Ramos, MDAD Chief of Planning.

## BACKGROUND

As a result of the events of September 11, 2001, and new security rules and regulations imposed by the Department of Homeland Security, the Miami-Dade Aviation Department (MDAD) has identified the need to secure and isolate the MIA fuel farm from public access.

To accomplish this, MDAD, with the cooperation and assistance of FDOT, has implemented a perimeter road improvement project for re-routing the existing perimeter road traffic, between NW 14th Street and NW 21st Street, to the east of Tamiami Canal and around the existing employee parking lot while using and upgrading the existing roadways in the area.

A new roadway segment will extend NW 42nd Court north and require the construction of a new low profile bridge across the Tamiami Canal to provide a link to connect into NW 20th Street and the MIA Terminal. A portion of NW 42nd Court will cross at grade the State Rail Corridor and CSXT Property. (See Exhibit Attached). The new crossing necessitates the reconstruction of the existing grade crossing and the installation of the new grade crossing, along with automatic railroad grade crossing traffic devices.

The attached Railroad Reimbursement Agreement between FDOT, CSXT, and the County will provide for the parties' obligations regarding this work, including maintenance responsibilities of CSXT, FDOT, and Miami-Dade County as they relate to the new railroad crossing devices at the relocated N.W. 42nd Court roadway.

Assistant County Manager

# MEMORANDUM

(Revised)

**TO:** Honorable Chairman Bruno A. Barreiro and Members, Board of County Commissioners

**DATE:** October 7, 2008

**FROM:** R. A. Cuevas, Jr. County Attorney

**SUBJECT:** Agenda Item No. 8(A)(1)(B)

**Please note any items checked.**

_____ **"4-Day Rule" ("3-Day Rule" for committees) applicable if raised**

_____ **6 weeks required between first reading and public hearing**

_____ **4 weeks notification to municipal officials required prior to public hearing**

_____ **Decreases revenues or increases expenditures without balancing budget**

_____ **Budget required**

_____ **Statement of fiscal impact required**

_____ **Bid waiver requiring County Manager's written recommendation**

_____ **Ordinance creating a new board requires detailed County Manager's report for public hearing**

_____ **Housekeeping item (no policy decision required)**

_____ **No committee review**

Approved _____ Mayor
Veto _____
Override _____

Agenda Item No. 8(A)(1)(B)
10-7-08

**RESOLUTION NO. _____**

**RESOLUTION RELATING TO MIAMI INTERNATIONAL AIRPORT; RATIFYING EXECUTION BY THE MAYOR'S DESIGNEE OF A RAILROAD REIMBURSEMENT AGREEMENT AMONG MIAMI-DADE COUNTY, THE FLORIDA DEPARTMENT OF TRANSPORTATION, AND CSX TRANSPORTATION, INC. UNDER FINANCIAL PROJECT NUMBER 41466015701 ESTABLISHING THE OBLIGATIONS OF ALL THREE PARTIES RELATING TO THE RELOCATION OF RAILROAD GRADE CROSSINGS AND ASSOCIATED DEVICES RESULTING FROM THE RE-ROUTING OF PERIMETER ROAD AT THE AIRPORT**

**WHEREAS,** this Board desires to accomplish the purposes outlined in the accompanying memorandum and document, copies of which are incorporated herein by reference,

**NOW, THEREFORE, BE IT RESOLVED BY THE BOARD OF COUNTY COMMISSIONERS OF MIAMI-DADE COUNTY, FLORIDA,** that this Board ratifies, confirms, and approves the execution by the Mayor's Designee, pursuant to the provisions of Section 2-285(6) of the Code of Miami-Dade County, of the Railroad Reimbursement Agreement (the "RA") among Miami-Dade County, the Florida Department of Transportation ("FDOT"), and CSX Transportation, Inc. ("CSXT"), under Financial Project Number 41466015701, that establishes the obligations of all three parties relating to the relocation of railroad grade crossings and associated devices resulting from the re-routing of Perimeter Road and the extension of N.W. 42nd Court on the east side of Miami International Airport, such RA providing that CSXT will construct the grade crossings and install the associated devices, FDOT

will reimburse CSXT for such cost, and the County's Aviation Department and FDOT will share the maintenance cost thereof, estimated to be $1,573.00 annually for each party.

The foregoing resolution was offered by Commissioner , who moved its adoption. The motion was seconded by Commissioner and upon being put to a vote, the vote was as follows:

Bruno A. Barreiro, Chairman
Barbara J. Jordan, Vice-Chairwoman

| | |
|---|---|
| Jose "Pepe" Diaz | Audrey M. Edmonson |
| Carlos A. Gimenez | Sally A. Heyman |
| Joe A. Martinez | Dennis C. Moss |
| Dorrin D. Rolle | Natacha Seijas |
| Katy Sorenson | Rebeca Sosa |
| Sen. Javier D. Souto | |

The Chairperson thereupon declared the resolution duly passed and adopted this 7th day of October, 2008. This resolution shall become effective ten (10) days after the date of its adoption unless vetoed by the Mayor, and if vetoed, shall become effective only upon an override by this Board.

MIAMI-DADE COUNTY, FLORIDA
BY ITS BOARD OF
COUNTY COMMISSIONERS

HARVEY RUVIN, CLERK

By:_____
Deputy Clerk

Approved by County Attorney as
to form and legal sufficiency. TPA

Thomas P. Abbott

# STATE OF FLORIDA DEPARTMENT OF TRANSPORTATION
# RAILROAD REIMBURSEMENT AGREEMENT
# GRADE CROSSING AND CROSSING TRAFFIC CONTROL DEVICES
# COUNTY OF MIAMI DADE
# SOUTH FLORIDA RAIL, CORRIDOR ONLY

| Financial Project I.D. | Road Name or Number | County Name | Parcel & R/W Number | FAP Number |
|---|---|---|---|---|
| 41466015701 | NW 42nd Court | MIAMI DADE | 1(SIG-B) | N/A |

**THIS AGREEMENT**, made and entered into this _____ day of _____, 200__ by and between the **STATE OF FLORIDA DEPARTMENT OF TRANSPORTATION**, hereinafter called the **DEPARTMENT**, and **CSX TRANSPORTATION, INC.**, a corporation of Virginia, with its place of business in the City of Jacksonville, County of Duval, STATE OF FLORIDA, and authorized to do business in the State of Florida, hereinafter called CSXT and the COUNTY of **MIAMI DADE**, a political subdivision of the State of Florida, hereinafter called the **COUNTY**.

WITNESSETH:

WHEREAS, the **DEPARTMENT** and **CSXT** entered into a Purchase and Sale Agreement for the South Florida Rail Corridor, hereinafter called **SFRC** described herein on May 11, 1988, at which time the **DEPARTMENT** became the owner of said property and **CSXT** retained an Easement for Rail Freight Operations within the **SFRC**, and under which **CSXT** manages and maintains the property on behalf of the **DEPARTMENT** pursuant to the Phase A Operating and Management Agreement, hereinafter called **Phase A Agreement** entered into on May 11, 1988 by **CSXT** and the **DEPARTMENT** and made a part of this Agreement by reference thereto, and

WHEREAS, in the event of termination of the aforesaid **Phase A Agreement** as therein provided, the parties hereto desire that the provisions of the **Phase B Agreement** will thereafter govern **CSXT's** conduct of rail freight and intercity rail passenger operations over the State Property in a manner consistent with the other uses of the State Property. Upon the Commencement Date hereof, **CSXT** shall transfer to the **DEPARTMENT** the administration by **CSXT** (pursuant to Section 4.10 of the **Phase A Agreement**) of all agreements pertaining to the maintenance, repair and operation of existing roadway and highway crossings, crossing protection devices and railway interlocking and interchange facilities on the State Property, and

Whereas, the **DEPARTMENT** is constructing, reconstructing, or otherwise changing a portion of the Public Road System, designated by the DEPARTMENT as FM No. 41466015701, on NW 42nd Court, which crosses at grade the State Rail Corridor and CSXT Property at Railroad MP: SXH 37.80, FDOT/AAR Crossing Number 915143C, at or near CITY OF MIAMI, Florida as shown on DEPARTMENT"S Plan Sheet NO. 17, 20, 21 attached hereto as a part hereof;

NOW, THEREFORE, in consideration of the mutual undertakings as herein set forth, the parties hereto agree as follows:

1. The **COUNTY** shall be responsible for the cost to maintain the said Road at grade, and necessary approaches thereof, across the **DEPARTMENT'S** right-of-way, over its tracks and through the Railroad Easement retained by **CSXT** at the hereinabove-referenced location.

2. If the **COUNTY** so requests, **CSXT** shall provide, furnish or have furnished, all necessary material required for, and will construct at **DEPARTMENT'S** expense ON BEHALF OF THE County a Standard Railroad Crossing Type CONCRETE in accordance with the **DEPARTMENT'S** Standard Index No. 560 by reference made a part hereof, as well as

automatic railroad grade crossing traffic control devices at said location an accordance with (1) the attached detailed statement of the work, plans, and specifications; (2) the **DEPARTMENT'S** Plans and Standard Index Number 17882, and (3) FHPM 1-4-3 and FHPM 6-6-2-1, or Rule 14-46.002. F.A.C. all of which by reference are made a part hereof. The **DEPARTMENT** shall be responsible for the costs of Maintenance of Traffic during the construction period.

Upon completion of the crossing, **CSXT** shall be responsible for the maintenance of said crossing in accordance with the **Phase A Agreement** and the **COUNTY** shall be responsible for the maintenance cost of the highway roadbed and surface outside the railway ties and the crossing surface. However, it is expressly understood and agreed that **CSXT** and/or the **DEPARTMENT** may, at their option and upon notification to the **COUNTY**, perform such periodic maintenance work and bill the **COUNTY** directly for costs thus incurred that are the responsibility of the **COUNTY**.

3. The **DEPARTMENT** at its discretion may arrange for the synchronization of the railroad crossing devices with existing or proposed highway traffic control devices at NW 42nd Court, and attendant installation of Type III, Class III. None of the parties shall disconnect sequence without prior notice to the other. Each party shall maintain it's interconnect cable.

   After installation of said signals is completed, fifty (50) percent of the expense thereof in maintaining the same shall be borne by the **COUNTY** as enumerated by the Schedule of Annual Cost of Automatic Highway Grade Crossing Traffic Control Devices attached hereto and by this reference made a part hereof and subject to future revision. And fifty (50) percent of the cost shall be borne by the **DEPARTMENT** pursuant to the Phase A Agreement. After said signals have been installed and found to be in satisfactory working order by the parties hereto, the same shall be immediately put into service, operated and maintained by **CSXT** so long as said **CSXT** or successors or assigns shall operate the said signals at said grade crossing; or until it is agreed between the parties hereto that the signals are no longer necessary, or until the said crossing is abandoned; or legal requirements occur which shall cease operation of signals thereat. **CSXT** agrees that any future relocation or adjustment of said signals shall be performed by **CSXT** but at the expense of the party initiating such relocation. Upon relocation, the maintenance responsibilities shall be in accordance with the provisions of this agreement. It is further agreed that the cost of maintaining any additional or replacement signal equipment at the same location will be shared as provided above.

4. All work contemplated at this crossing shall at all times be subject to the approval of the **DEPARTMENT** and Chief Engineer or his representative. **CSXT'S** Division Engineer and/or Superintendent shall receive at least seventy-two (72) hours notice prior to the performance of any work within the limits of the railroad right-of-way.

5. Unless otherwise agreed upon herein, the **COUNTY** agrees to ensure that the advance warning signs and railroad crossing pavement marking will conform to the Department of Transportation Manual on Uniform Traffic Control Devices within thirty (30) days of notification that the railroad signal improvements have been completed and that such signs and pavement markings will be continually maintained at an acceptable level.

6. The **DEPARTMENT, ON BEHALF OF THE COUNTY** will reimburse **CSXT** for the cost of watchmen or flagging service when the **DEPARTMENT'S** contractor is performing work that requires movement of equipment, employees or trucks across the tracks of the **DEPARTMENT** or when at times **CSXT** and/or the **DEPARTMENT** agree that such a service is necessary.

7. All contractors working in the **SFRC** are required to have Railroad Protective Public Liability and Railroad Protective Property Damage Liability insurance in a combined amount of $5,000,000.00, for all personal injuries, death or property damage, per occurrence arising during

the policy period. The maximum dollar amounts of coverage to be reimbursed by Federal funds, with respect to bodily injury, death or property damage is limited to a combined amount of $10,000,000.00 per occurrence unless approval for larger amounts by the FHWA Division Administrator is made a part of this Agreement.

Contractor will furnish **CSXT** a Certificate of Insurance showing that the contractor carries liability insurance (applicable to the job in question) in the amount of $5,000,000.00 for all personal injuries, death or property damage, per occurrence arising during the policy period. Such insurance is to conform with the requirements of 23 C.F.R., Subchapter G, Part 646, Subpart A, and any supplements thereto or revisions thereof.

8. The **DEPARTMENT, ON BEHALF OF THE COUNTY** will bear the cost of relocation of any utility (wire or pipe) due to **DEPARTMENT'S** requirements, that has compensable interest on the right-of-way occasioned by the construction of said crossing and occupancy of the **DEPARTMENT'S** property, unless the original agreement creating the occupation of such utility requires the Utility to relocate said line.

9. **CSXT** hereby agrees to install and/or adjust the necessary parts of its facilities in accordance with the provisions set forth in the:

   **DEPARTMENT** Procedure 725-080-002 Appendix D.4 and Rule 14-46.002 "Responsibility for the Cost of Railroad-Highway Crossing", Florida Administrative Code and/or the Federal Highway Administration's Federal Aid-Highway Policy Guide, 23 C.F.R. Subchapter B, Part 140, Subpart 1; and 23 C.F.R. Subchapter G. Part 646, Subpart B. and any supplements thereto or revisions thereof, which, by reference hereto, are made a part hereof. **CSXT** further agrees to do all such work with its own forces or by a contractor paid under a contract held by **CSXT** under the supervision and approval of the **DEPARTMENT**, and the Federal Highway Administration, when applicable.

10. All labor, services, materials, and equipment furnished by **CSXT** in carrying out future maintenance and modifications of the said crossing that are the responsibility of the **COUNTY** shall be billed by **CSXT** directly to the **COUNTY**. Separate records as to costs of contract bid terms and force account items performed for **CSXT** shall be furnished by **CSXT** to the **COUNTY**.

11. **CSXT** has determined that the method to be used in developing future relocation or installation cost shall be actual and related indirect costs accumulated in accordance with a work order accounting procedure prescribed by the applicable Federal or State regulatory body.

12. Upon completion of the crossing improvements and conclusion of work, all billing for future maintenance and modifications, which are the responsibility of the **COUNTY**, will be as follows: **CSXT** shall, within one hundred eighty (180) days, furnish the **COUNTY** with two (2) copies of its final and complete billing of all costs incurred in connection with the work performed hereunder, such statement to follow as closely as possible the order of items contained in the estimate furnished to the **COUNTY**, by **CSXT**. The totals for labor, overhead, travel expense, transportation, equipment, material and supplies, handling costs and other services shall be shown in such a manner as will permit ready comparison with the approved plans and estimates. Materials shall be itemized where they represent major components of cost in the relocation following the pattern set out in the approved estimate as closely as possible.

    Salvage credits from recovered and replaced permanent and recovered temporary materials shall be reported in said bills in relative position with the charge for the replacement or the original charge for temporary use.

The final billing shall show the description and site of the Project, the date on which the first work was performed, or, if preliminary engineering or right-of-way items are involved, the date on which the earliest item of billed expense was incurred; the date on which the last work was performed or the last item of billed expense was incurred; and the location where the records and accounts billed can be audited. Adequate reference shall be made in the billing to where the records and accounts billed can be audited. Adequate reference shall be made in the billing to **CSXT'S** records, accounts and other relevant documents. All cost records and accounts shall be subject to audit by a representative of the **COUNTY**. Upon receipt of invoices, prepared in accordance with the provisions of the above-indicated Reimbursement Policy, the **COUNTY** agrees to reimburse **CSXT** in the amount of such costs approved by the **COUNTY** auditor.

13. Payment shall be made only after receipt and approval of goods and services unless advance payments are authorized by the State Comptroller under Section 215.422(14), Florida Statutes, authorizes advance payments.

14. In accordance with Section 287.056, Florida Statutes, the following provisions are in this Agreement: If this contract involves units of deliverables, then such units must be received and accepted in writing by the Contract Manager prior to payments. Bills for fees or other compensation for services or expenses shall be submitted in detail sufficient for a proper pre-audit and post-audit thereof.

15. In accordance with Section 215.422 Florida Statutes, the following provisions are in this Agreement: Contractors providing goods and services to the **DEPARTMENT** should be aware of the following time frames. Upon receipt, the **DEPARTMENT** has five (5) working days to inspect and approve the goods and services, unless the Agreement specifies otherwise. The **DEPARTMENT** has twenty (20) working days to deliver a request for payment (voucher) to the Department of Banking and Finance. The twenty (20) days are measured from the latter of the date the invoice is received, or the date the goods or services are received, inspected, and approved.

    If a payment is not available within forty (40) days, a separate interest penalty at a rate as established pursuant to Section 215.422(3)(b), Florida Statutes, will be due and payable in addition to the invoice amount, to the Contractor, interest penalties of less than one (1) dollar will not be enforced unless the Contractor requests payment. Invoices, which have to be returned to a Contractor because of Contractor preparation errors, will result in a delay in the payment. The invoice payment requirements do not start until a properly completed invoice is provided to the **DEPARTMENT**.

    A Vendor Ombudsman has been established within the Department of Banking and Finance. The duties of the individual include acting as an advocate for contractors/vendors who may be experiencing problems in obtaining timely payment(s) from a state agency. The Vendor Ombudsman may be contacted at (850) 410-9724, or by calling the State Comptroller's Hotline, 1-800-848-3792.

16. Records of costs incurred under terms of this Agreement for future projects shall be maintained and made available upon request to the **COUNTY** and the **DEPARTMENT** at all times during the period of this Agreement and for three years after final payment is made. Copies of these documents and records shall be furnished to the **COUNTY** and the **DEPARTMENT** upon request.

Records of costs incurred includes the Contractor's general accounting records and the project records, together with supporting documents of the Contractor and subcontractors considered necessary by the **COUNTY** and the **DEPARTMENT** for a proper audit of costs.

17. In the event this contract is for services in excess of TWENTY-FIVE THOUSAND DOLLARS ($25,000.00) and a term of more than one year, the provisions of Section 339.135(6)(a), Florida Statutes are hereby incorporated;

    The **DEPARTMENT** during any fiscal year, shall not expend money, incur any liability, or enter into any contract which, by its terms, involves the expenditures of money in excess of the amounts budgeted as available for expenditure during such fiscal year. Any contract, verbal or written, made in violation of this subsection is null and void, and no money may be paid on such contract. The **DEPARTMENT** shall require a statement from the Comptroller of the **DEPARTMENT** that such funds are available prior to the entering into any such contract or other binding commitment of funds.

    Nothing herein contained shall prevent the making of contracts for periods, exceeding one year, but any contract so made shall be executory only for the value of the services to be rendered or agreed to be paid for in succeeding fiscal years, and this paragraph shall be incorporated verbatim in all contracts of the **DEPARTMENT** which are for an amount in excess of TWENTY-FIVE THOUSAND DOLLARS ($25,000.00) and which have a term for a period of more than one year.

18. Attached hereto, and by reference made a part hereof, are plans and specifications of the work to be performed by CSXT pursuant to the terms hereof, and an estimate of the cost in the amount of **$286,231.00**. All work performed by CSXT pursuant hereto, shall be performed to these plans and specifications as approved by the **DEPARTMENT**, and the Federal Highway Administration if federal aid participating; and all subsequent plan changes shall likewise be approved by the DEPARTMENT and the Federal Highway Administration, where applicable.

19. If the DEPARTMENT and CSXT concur that an upgrading and/or betterment of the crossing beyond that contemplated in this agreement is desirable, the any cost associated with such upgrading or betterment shall be paid from the maintenance account provided for in the Phase A Agreement. If the COUNTY wishes to upgrade and/or better the crossing, such upgrade or betterment shall be paid by the COUNTY.

20. All salvage value of materials resulting from the work contemplated herein shall be subject to the salvage provisions of the Phase A Agreement.

21. In accordance with Section 287.133(2)(a), Florida Statutes, the following provisions are included in this Agreement:

    > A person or affiliate who has been placed on the convicted vendor list following a conviction for a public entity crime may not submit a bid on a contract to provide any goods or services to a public entity, may not submit a bid on a contract with a public entity for the construction or repair of a public building or public work, may not submit bids on leases for real property to a public entity, may not be awarded or perform work as a contractor, supplier, subcontractor, or consultant under a contract with any public entity, and may not transact business with any public entity in excess of the threshold amount provided in Section 287.017 for CATEGORY TWO for a period of 36 months from the date of being placed on the convicted vendor list.

22. In accordance with Section 287.0582, Florida Statutes, the following provision is included in this Agreement:

> The **DEPARTMENT'S** obligation to pay under this section is contingent upon an annual appropriation by the Florida Legislature.

23. The **DEPARTMENT** reserves the right to unilaterally cancel this Agreement for refusal by the contractor or CSXT to allow public access to all documents, papers, letters, or other material subject to the provisions of Chapter 119, Florida Statutes, and made or received in conjunction with this Agreement.

24. Should the use of said crossing be abandoned due to removal of the roadway then all rights hereby to the **COUNTY** shall thereupon cease and terminate and the **COUNTY** will, at its sole cost and in a manner satisfactory to the **DEPARTMENT** remove said crossing and restore the **DEPARTMENT'S** property to the condition previously found, provided that the **DEPARTMENT** may, at its option, remove the said crossing and restore its property, and the **COUNTY** will, in such event, upon bill rendered, pay to the **DEPARTMENT** the entire cost incurred by it in such removal and restoration, provided such costs are accrued as specified in Paragraph 9.

25. ~~**CSXT** covenants and agrees that it will indemnify and hold harmless for **DEPARTMENT'S** officers, agents, and employees from any claim, loss, damage, cost charge, or expense arising out of any action, neglect, omission, or delay by **CSXT** during the performance of the contract, whether direct or indirect, and whether to any person or property to which the **DEPARTMENT** or said parties may be subject, except that neither **CSXT** nor any of its subcontractors will be liable under this section for damages arising out of injury or damage to persons or property directly caused or resulting from sole negligence of the **DEPARTMENT**, or any of its officers, agents, or employees.~~

26. Upon execution this maintenance Agreement shall supersede all provisions, relating to said crossing, contained in any previous maintenance Agreement and shall become the permanent maintenance Agreement of record.

27. Provision twenty-five (25) was stroked through prior to the agreement execution.

IN WITNESS WHEREOF, the parties hereto have caused these presents to be executed by their duly authorized officers the day and year first written above.

STATE OF FLORIDA
DEPARTMENT OF TRANSPORTATION

By: _____

TITLE: Director of Transportation Development

CSX TRANSPORTATION, INC.:

By: _____

TITLE: _____

MIAMI DADE COUNTY

By: _____

COUNTY COMMISSIONERS DADE COUNTY FLORIDA

8/20/08

Approved as to form and legal sufficiency

Assistant County Attorney

| Approved as to Form, Legality and Execution | Approved as to Funds Available | Approved as to FHMP Requirements |
|---|---|---|
| By: _____ | By: _____ | By: _____ |
| Attorney FDOT | Fiscal FDOT | FHWA |
| Date: _____ | Date: _____ | Date: _____ |

# CSX TRANSPORTATION, INC.
## FORCE ACCOUNT ESTIMATE

**ACCT. CODE : 709 -** FL1105
**Pub EB - FL** EB3 (FL)

**ESTIMATE SUBJECT TO REVISION AFTER:** **6/17/2007** **DOT NO.:** 915 143C
**CITY:** Miami **COUNTY:** Miami/Dade **STATE:** FL
**DESCRIPTION:** Road widening project on NW 42nd Court (Commissary Rd./NW 20th) in Miami, Fl.

**DIVISION:** Jacksonville **SUB-DIV:** Homestead **MILEPOST:** SXH 37.80
**DRAWING NO.:** __ **DRAWING DATE:** __ **REGION:**
**AGENCY PROJECT NUMBER:** 414660-2-57-01

| | | | | | | | |
|---|---|---|---|---|---|---|---|
| | **PRELIMINARY ENGINEERING:** | | | | | | |
| 200 | Labor (Non Contract) | | 5 | Days @ | $ 270.00 | $ | 1,350 |
| 200 | Additive | 42.41% | | | | $ | 573 |
| 230 | Expenses | | | | | $ | 235 |
| 212 | Contracted & Administrative Engineering Services | | | | | $ | 6,500 |
| | **Subtotal** | | | | | $ | 8,658 |
| | **CONSTRUCTION ENGINEERING/INSPECTION:** | | | | | | |
| 200 | Labor (Non Contract) | | 5 | Days @ | $ 270.00 | $ | 1,350 |
| 200 | Additive | 42.41% | | | | $ | 573 |
| 230 | Expenses | | | | | $ | 235 |
| 212 | Contracted & Administrative Engineering Services | | | | | $ | 5,000 |
| | **Subtotal** | | | | | $ | 7,158 |
| | **FLAGGING SERVICE: (Contract Labor)** | | | | | | |
| 70 | Labor (Conductor-Flagman) | | | Days @ | $ - | $ | - |
| 50 | Labor (Foreman/Inspector) | | 7 | Days @ | $ 235.00 | $ | 1,645 |
| 70 | Additive | 74.68% (Transportation Department) | | | | $ | - |
| 50 | Additive | 76.03% (Engineering Department) | | | | $ | 1,251 |
| 230 | Expenses | (Engineering Department) | 0 | Days @ | $ 75.00 | $ | - |
| 230 | Expenses | | 0 | Days @ | $ 45.00 | $ | - |
| | **Subtotal** | | | | | $ | 2,896 |
| | **COMMUNICATIONS WORK:** | | | | | | |
| | Temporary (Details Attached) | | | | | $ | - |
| | Permanent (Details Attached) | | | | | $ | - |
| | **Subtotal** | | | | | $ | - |

# CSX TRANSPORTATION, INC.
## FORCE ACCOUNT ESTIMATE

**ACCT. CODE : 709 -** FL1105
**Pub EB - FL** EB3 (FL)

| | | | | | | | |
|---|---|---|---|---|---|---|---|
| | **TRACK: LABOR** | | | | | | |
| 50 | Traffic Control | | 0 | MAN-HRS | $ 21.00 | $ | - |
| 50 | Remove Existing Crossing | | 100 | MAN-HRS | $ 21.00 | $ | 2,100 |
| 50 | Renew Cross Ties | | 50 | MAN-HRS | $ 21.00 | $ | 1,050 |
| 50 | Renew Rail | | 140 | MAN-HRS | $ 21.00 | $ | 2,940 |
| 50 | Install OTM | | 50 | MAN-HRS | $ 21.00 | $ | 1,050 |
| 50 | Install Field Welds | | 60 | MAN-HRS | $ 21.00 | $ | 1,260 |
| 50 | Install Geo-Textile Fabric | | 5 | MAN-HRS | $ 21.00 | $ | 105 |
| 50 | Install Sub-Drains | | 40 | MAN-HRS | $ 21.00 | $ | 840 |
| 50 | Install Ballast | | 80 | MAN-HRS | $ 21.00 | $ | 1,680 |
| 50 | Line and Surface | | 60 | MAN-HRS | $ 21.00 | $ | 1,260 |
| 50 | Install Crossing Materials | | 80 | MAN-HRS | $ 21.00 | $ | 1,680 |
| 50 | Install Bituminous Pavement | | 0 | MAN-HRS | $ 21.00 | $ | - |
| 50 | | | 0 | MAN-HRS | $ 21.00 | $ | - |
| 50 | | | 0 | MAN-HRS | $ 21.00 | $ | - |
| 50 | | | 0 | MAN-HRS | $ 21.00 | $ | - |
| 50 | Clean-Up | | 50 | MAN-HRS | $ 21.00 | $ | 1,050 |
| 50 | Additive | 76.03% | | | | $ | 11,416 |
| 230 | Per Diem | | 72 | MAN-DAY | $ 90.00 | $ | 6,480 |
| | **Subtotal** | | | | | $ | 32,911 |
| | **TRACK: MATERIAL** | | | | | | |
| 220 | Cross Ties, Main Line | | 21 | EA | $ 31.00 | $ | 651 |
| 220 | Rail, 136RE, New | | 160 | LF | $ 17.00 | $ | 2,720 |
| 220 | Misc. OTM | | 1 | LOT | $ 500.00 | $ | 500 |
| 210 | Geo-Textile Fabric | | 1 | RL | $ 250.00 | $ | 250 |
| 210 | Sub-Drains | | 160 | LF | $ 6.00 | $ | 960 |
| 220 | Ballast | | 86 | NT | $ 5.75 | $ | 495 |
| 220 | Field Welds | | 8 | EA | $ 100.00 | $ | 800 |
| | Transition Rail | | 4 | | $ 300.00 | $ | 1,200 |
| | | | 0 | | $ - | $ | - |
| 210 | Concrete Full Width | | 72 | TF | $ 225.00 | $ | 16,200 |
| 210 | Concrete/Rubber Xing (CSX) | | 0 | TF | $ 135.00 | $ | - |
| 210 | Rubber Crossing, Full Depth | | 0 | TF | $ 280.00 | $ | - |
| 210 | Timber/Asphalt Crossing (CSX Standard) | | 0 | TF | $ 42.00 | $ | - |
| 220 | Crossties, 10' Length | | 54 | EA | $ 39.00 | $ | 2,106 |
| 210 | Bituminous Material | | 0 | NT | $ 80.00 | $ | - |
| 210 | Sales Tax on Material | 7.00% | | | | $ | 1,812 |
| 210 | Material Handling | 5.00% | | | | $ | 1,294 |
| | **Subtotal** | | | | | $ | 28,987 |
| | **CONTRACT:** | | | | | | |
| 215 | Asphalt Paving (In Place) | | 14 | NT | $ 120.00 | $ | 1,680 |
| 241 | Disposal of Waste Materials | | 112 | TF | $ 10.00 | $ | 1,120 |
| 215 | Maintenance of Traffic | | 1 | DAY | $ 300.00 | $ | 300 |
| | **Subtotal** | | | | | $ | 3,100 |

# CSX TRANSPORTATION, INC.
## FORCE ACCOUNT ESTIMATE

**ACCT. CODE : 709 - FL1105**
**Pub EB - FL EB3 (FL)**

| | | | | | | | |
|---|---|---|---|---|---|---|---|
| 241 | **EQUIPMENT RENTAL:** | | | | | | |
| | **Subtotal** | | | | | $ | 15,015 |
| 50 | **WORK TRAIN:** | 0 | DAY | $ | 2,100.00 | $ | - |
| | **Subtotal** | | | | | $ | - |
| | **SALVAGE:** | | | | | | |
| 228 | Rail | 4.5 | NT | $ | 65.00 | $ | (293) |
| 228 | OTM | 1 | NT | $ | 75.00 | $ | (75) |
| | **Subtotal** | | | | | $ | (368) |
| | **SIGNAL WORK:** | | | | | | |
| 210 | Material - Field & Consumables | | | | | $ | 68,439 |
| 210 | Material - Sales Tax | | | | | $ | 4,791 |
| 220 | Material - Shop | | | | | $ | - |
| 60 | Construction Labor | | | | | $ | 17,913 |
| 65 | Shop Labor | | | | | $ | 800 |
| 230 | Per Diem | | | | | $ | 7,770 |
| 200 | RR Engineering,Preliminary | | | | | $ | 4,174 |
| 200 | RR Engineering,Construction | | | | | $ | 2,687 |
| 60 | Additives to Construction Labor | | | | | $ | 14,556 |
| 65 | Additives to Shop Labor | | | | | $ | 760 |
| 200 | Additives to Engineering | | | | | $ | 2,697 |
| 241 | Equipment Expense | | | | | $ | 9,100 |
| 241 | Waste Management | | | | | $ | 144 |
| 212 | Contract Engineering | | | | | $ | 15,525 |
| 211 | Freight | | | | | $ | 4,700 |
| 216 | AC Power Service | | | | | $ | 2,500 |
| 228 | Salvage | | | | | $ | - |
| 900 | Other | | | | | $ | - |
| | **Subtotal** | | | | | $ | 156,556 |
| | **ACCOUNTING & BILLING:** | | | | | | |
| 40 | Labor | 16 | Days @ | $ | 200.00 | $ | 3,200 |
| 40 | Additive 65.54% | | | | | $ | 2,097 |
| | **Subtotal** | | | | | $ | 5,297 |
| | **PROJECT SUBTOTAL:** | | | | | $ | 260,210 |
| 900 | **CONTINGENCIES:** 10.00% | | | | | $ | 26,021 |
| | **GRAND TOTAL** ********** | | | | | $ | 286,231 |

# CSX TRANSPORTATION, INC.
# FORCE ACCOUNT ESTIMATE

**ACCT. CODE : 709 - FL1105**
**Pub EB - FL EB3 (FL)**

**DIVISION OF COST:**

| | | | |
|---|---|---|---|
| Agency | 100.00% | $ | 286,231 |
| Railroad | 0.00% | $ | - |
| | **TOTAL** ********** | $ | 286,231 |

**NOTE: Estimate is based on FULL CROSSING CLOSURE during work by Railroad Forces.**

This estimate has been prepared based on site conditions, anticipated work duration periods, material prices, labor rates, manpower and resource availability, and other factors known as of the date prepared. The actual cost for CSXT work may differ based upon the agency's requirements, their contractor's work procedures, and/or other conditions that become apparent once construction commences or during the progress of the work

Office of Assistant Chief Engineer Public Projects–Jacksonville, Florida

Estimated prepared by: PRS

DATE: 12/19/2006 REVISED:

ACCT. CODE : 709 - FL1

Pub EB - FL EB3 (FL)

**ESTIMATE SUBJECT TO REVISION AFTER:** 6/17/07 **DOT NO.:** 915 143C

**CITY:** Miami **COUNTY:** Miami/Dade **STATE:** FL

**DESCRIPTION:** Road widening project on NW 42nd Court (Commissary Rd./NW 20th) in Miami, Fl.

**DIVISION:** Jacksonville **SUB-DIV:** Homestead **MILEPOST:** SXH 37.80

**DRAWING NO.:** __ **DRAWING DATE:** __ **REGION:**

**AGENCY PROJECT NUMBER:** 4146

| Amount | | |
|---|---|---|
| Task | Task Desc | Total |
| 40 | Labor General Office | $5,297 |
| 50 | Labor Roadway | $29,327 |
| 60 | Labor Signal | $32,469 |
| 65 | Labor Signal1 | $1,560 |
| 70 | Labor Transportation | |
| 200 | Labor NonContract | $13,403 |
| 210 | Invoice Material | $20,516 |
| | Material - Field & Consu | $73,230 |
| 211 | Invoice Freight | $4,700 |
| 212 | Invoice Contract Eng | $27,025 |
| 215 | Invoice Misc | $1,980 |
| 216 | Invoice Utilities | $2,500 |
| 220 | Material New | $7,272 |
| | Material - Shop | |
| 228 | Scrap Credit | -$368 |
| 230 | ExpenseRpts | $14,720 |
| 241 | Invoice Rental | $25,379 |
| 900 | Other | |
| 900 | Contingencies | $26,021 |
| | Material New | $1,200 |
| Grand Total | | $286,231 |

Oracle Input

STATE OF FLORIDA DEPARTMENT OF TRANSPORTATION

725-090-09
RAIL
05/02

# WORK DESCRIPTION
## GRADE CROSSING TRAFFIC CONTROL DEVICES

| FINANCIAL PROJECT NO. | ROAD NAME OR NUMBER | COUNTY NAME | PARCEL & R/W NUMBER | FAP NUMBER |
|---|---|---|---|---|
| 41466015701 | NW 42nd Court | MIAMI-DADE | 1(SIG-B) | N/A |

RAILROAD COMPANY

CSX Transportation

A. JOB DESCRIPTION & LOCATION: Road widening project on NW 42nd Court

B. TYPE OF ROADWAY FACILITY: _____

C. FDOT/AAR XING NO.: 915143C RR MILE POST TIE: SXH 37.80

D. TYPE CROSSING PROPOSED: III CLASS: III DOT INDEX NO.: 17882

E. STATUS AND PROPOSAL:

1. EXISTING DEVICES: (See Agreement dated _____)
   - a. ____ None-New Crossing.
   - b. ____ Crossbuck and Disk.
   - c. ____ Flashing Signals with Disk.
   - d. ____ Flashing Signals with Cantilever.
   - e. x Flashing Signals with Gates.
   - f. ____ Flashing Signals with Cantilever and Gates.

2. PROPOSED DEVICES: (Safety Index Rating _____)
   - a. ____ No revision required.
   - b. ____ Crossbuck and Disk.
   - c. ____ Flashing Signals and Disk.
   - d. ____ Flashing Signals with Cantilever.
   - e. x Flashing Signals with Gates.
   - f. ____ Flashing Signals with Cantilever and Gates.
   - g. ____ Relocate existing signal devices:
     - (1) ____ (With-Without) addition of Gates.
     - (2) ____ (With-Without) synchronization with highway traffic signals.
     - (3) ____ (With-Without) constant warning time.

F. COMMUNICATION AND/OR POWER LINE ADJUSTMENTS

1. ____ By Others (N/A Company.)
2. ____ By Railroad Company.

G. AUTHORITY REQUESTED: (Draft attached: ◉ Yes ○ No.)

1. x Agreement (Third Party Participating Miami Dade County )
2. ____ Supplemental Agreement No. _____
3. ____ Crossing Permit.
4. ____ Estimate for Change Order No. _____
5. ____ Letter of Authority.
6. ____ Letter of Confirmation (No Cost to Department).

H. OTHER REMARKS:

Negotiations to be completed by: Paola Baez

Signal installation target date: 12/31/2009

Synchronization: (Draft attached ○ Yes ◉ No.)

STATE OF FLORIDA DEPARTMENT OF TRANSPORTATION

# RAILROAD GRADE CROSSING TRAFFIC CONTROL DEVICES

725-090-41
RAIL
OGC - 01/06

| FINANCIAL PROJECT NO. | ROAD NAME OR NUMBER | COUNTY NAME | PARCEL & R/W NUMBER | FAP NUMBER |
|---|---|---|---|---|
| 41466015701 | NW 42nd Court | MIAMI-DADE | 1(SIG-B) | N/A |

COMPANY NAME: CSX Transportation

A. FDOT/AAR XING NO.: 915143C RR MILE POST TIE: SXH 37.80

B. TYPE SIGNALS PROPOSED III CLASS III DOT INDEX: 17882

## SCHEDULE OF ANNUAL COST OF AUTOMATIC HIGHWAY GRADE CROSSING TRAFFIC CONTROL DEVICES

Annual Maintenance Cost Exclusive of Installation

| CLASS | DESCRIPTION | COST* |
|---|---|---|
| I | Flashing Signals - One Track | $2,086.00 |
| II | Flashing Signals - Multiple Tracks | $2,760.00 |
| III | Flashing Signals and Gates - One Track | $3,146.00 |
| IV | Flashing Signals and Gates - Multiple Tracks | $3,950.00 |

AUTHORITY: FLORIDA ADMINISTRATIVE RULE 14-57.011
Public Railroad-Highway Grade Crossing Costs

EFFECTIVE DATE: July 22, 1982

GENERAL AUTHORITY: 334.044, F.S.

SPECIFIC LAW IMPLEMENTED: 335.141, F.S.

*This schedule will become effective July 1, 2006 and will be reviewed every 5 years and revised as appropriate based on the Consumer Price Index for all Urban Consumers published by the U.S. Department of Labor.

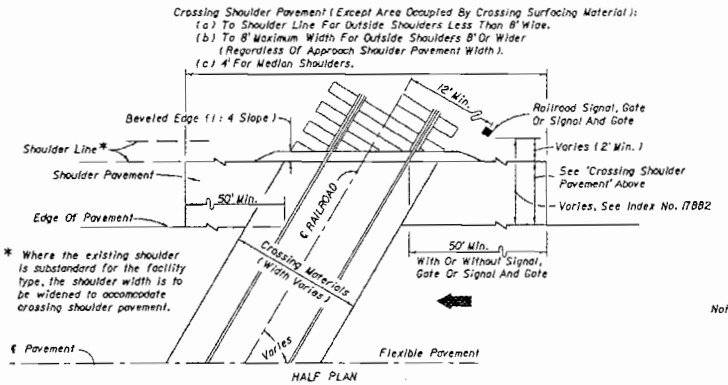


## ROADWAYS WITH FLUSH SHOULDERS

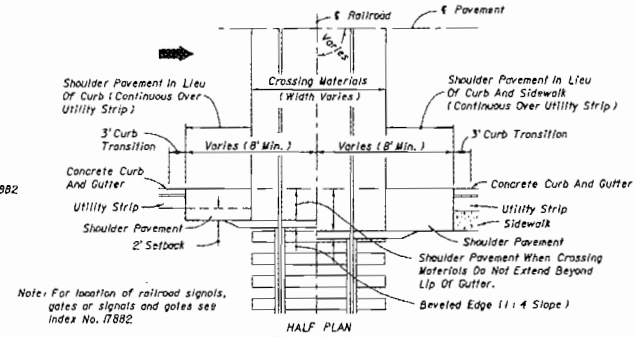


## CURBED ROADWAYS

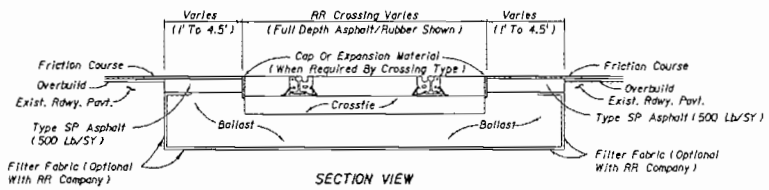


## TYPICAL CROSSING MATERIAL REPLACEMENT AT RR CROSSINGS

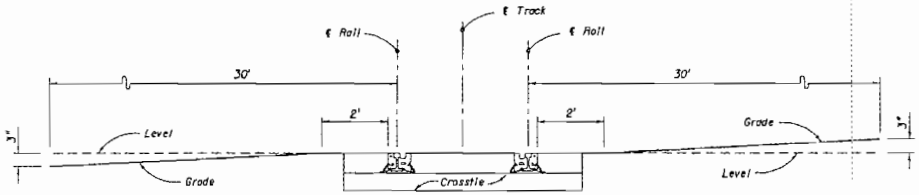


To prevent low-clearance vehicles from becoming caught on the tracks, the crossing surface should be of the same plane as the top of the rails for a distance of 2 feet outside the rails. The surface of the highway should also not be more than 3 inches higher or lower than the top of the nearest rail at a point 30 feet from rail unless track superelevation makes a different level appropriate. Vertical curves should be used to traverse from the highway grade to a level plane of the elevation of the rails. Rails that are superelevated, or a roadway approach section that is not level, will necessitate a site specific analysis for rail clearances.

## VERTICAL ROADWAY ALIGNMENT THROUGH A RAILROAD CROSSING

| CROSSING SURFACES | |
|---|---|
| Type | Definition |
| C | Concrete |
| R | Rubber |
| RA | Rubber/Asphalt |

| STOP ZONE FOR RUBBER CROSSING | |
|---|---|
| Design Speed (mph) | Zone Length (Distance From Stop) |
| 45 Or Less | 250' |
| 50 - 55 | 350' |
| 60 - 65 | 500' |
| 70 | 600' |

Notes:

1. Type R Crossings are NOT to be used for multiple track crossings within zones for an existing or scheduled future vehicular stop. Zone lengths are charted above.
2. Single track Type R Crossings within the zones on the chart may be used unless engineering or safety considerations dictate otherwise.

## General Notes

1. The Railroad Company will furnish and install all track bed (ballast), crossties, rails, crossing surface panels and accessory components. All pavement material, including that through the crossing, will be furnished and installed by the Department or its Contractor, unless negotiated otherwise.
2. When a railroad grade crossing is located within the limits of a highway construction project, a transition pavement will be maintained at the approaches of the crossing to reduce vehicular impacts to the crossing. The transition pavement will be maintained as appropriate to protect the crossing from low clearance vehicles and vehicular impacts until the construction project is completed and the final highway surface is constructed.
3. The Central Rail Office will maintain a list of currently used Railroad Crossing Products and will periodically distribute the current list to the District Offices as the list is updated.
4. The Railroad Company shall submit engineering drawings for the proposed crossing surface type to the Construction Project Engineer and/or the District Rail Office for concurrence along with the List of Railroad Crossing Products. The approved engineering drawings of the crossing surface type shall be made a part of the installation agreement.
5. Sidewalks shall be constructed through the crossing between approach sidewalks of the crossing. Sidewalks shall be constructed with appropriate material to allow unobstructed travel through the crossing in accordance with ADA requirements.
6. All asphalt shall be installed in accordance with Index No. 514 and Section 300 of the Standard Specifications.

| | | | |
|---|---|---|---|
| STATE OF FLORIDA DEPARTMENT OF TRANSPORTATION | 2006 FDOT Design Standards | Last Revision 04 | Sheet No. 1 of 1 |
| | RAILROAD CROSSINGS | Index No. 560 | |

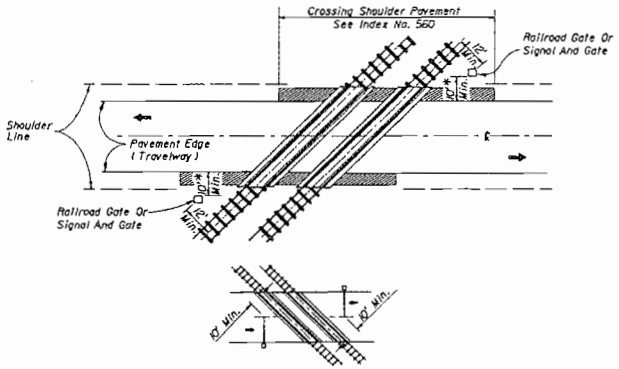


SIGNAL PLACEMENT AT RAILROAD CROSSING
( 2 - LANE DESIGN )

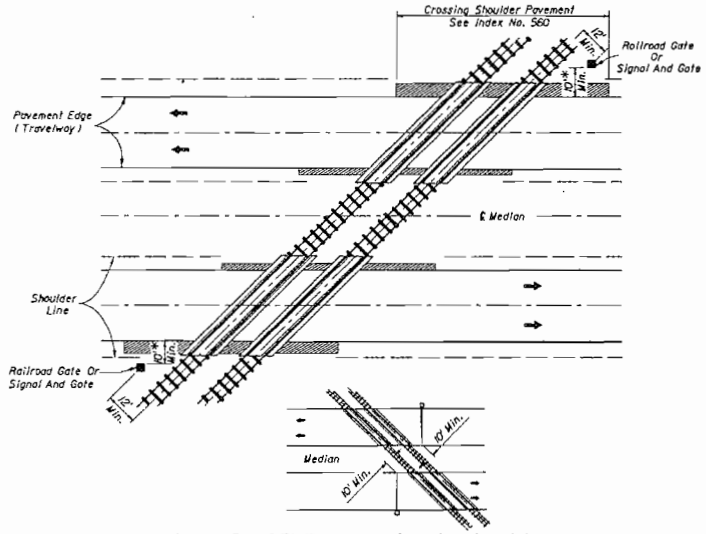


SIGNAL PLACEMENT AT RAILROAD CROSSING
( 4 - LANE DESIGN )

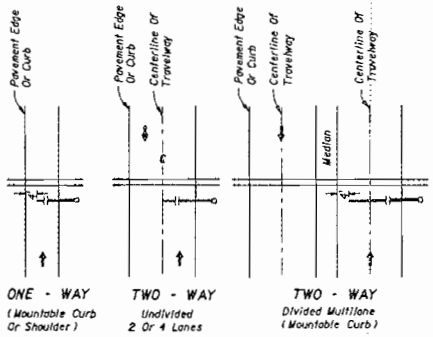


Note :
Arrows denote direction of travel not lane indication

**FIGURE I**
Gate Length Requirements
See Note 5 Sheet 3

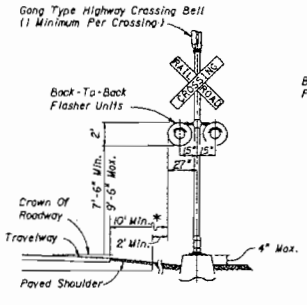


TYPE I

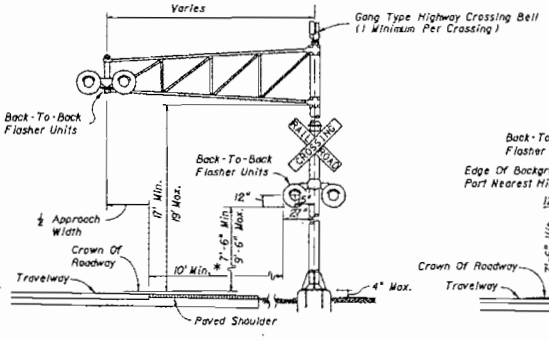


TYPE II

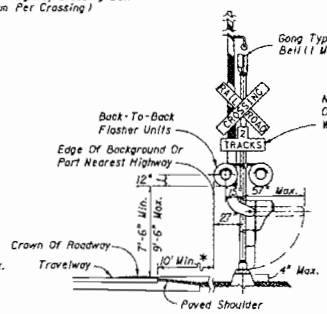


TYPE III

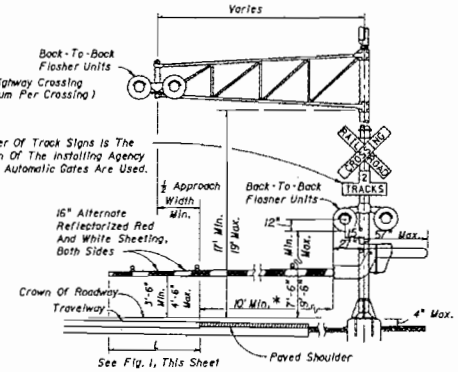


TYPE IV

* When 10' is deemed impracticle the control device can be located as close as 2' from the edge of a paved shoulder but not less than 6' from the edge of the near traffic lane.

Note :
Two separate foundations may be required ( one for signals, one for gate ), depending on type of equipment used.

General Notes

1. No guardrail is proposed for signals; however, some form of impact attenuation device may be specified for certain locations.
2. Advance flasher to be installed when and if called for in plans or specifications.
3. Top of foundation shall be no higher than 4" above finished shoulder grade.
4. Type of traffic control device
   - I Flashing signals
   - II Flashing signals with cantilever
   - III Flashing signals with gate
   - IV Flashing signals with cantilever & gate
   - V Gate
5. Class of traffic control devices
   - I Flashing signals - one track
   - II Flashing signals - multiple tracks
   - III Flashing signals and gates - one track
   - IV Flashing signals and gates - multiple tracks

| | | | |
|---|---|---|---|
| STATE OF FLORIDA DEPARTMENT OF TRANSPORTATION | 2006 FDOT Design Standards | Last Revision 07/01/05 | Sheet No. 1 of 4 |
| | RAILROAD GRADE CROSSING TRAFFIC CONTROL DEVICES | Index No. 17882 | |

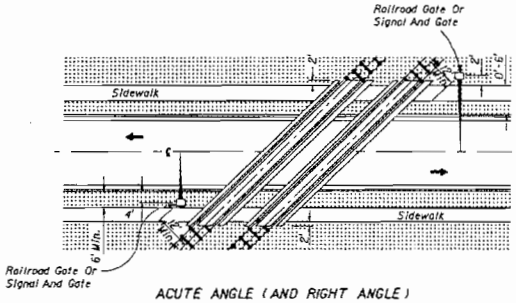


ACUTE ANGLE (AND RIGHT ANGLE)

## SIGNAL PLACEMENT AT RAILROAD CROSSING (2 LANES, CURB & GUTTER)

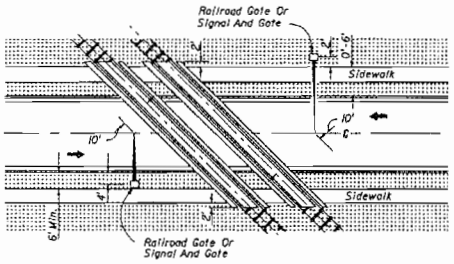


OBTUSE ANGLE

## SIGNAL PLACEMENT AT RAILROAD CROSSING (2 LANES, CURB & GUTTER)

### GENERAL NOTES

1. The location of flashing signals and stop lines shall be established based on future (or present) installation of gate with appropriate track clearances.
2. Where plans call for railroad traffic control devices to be installed in curbed medians, the minimum median width shall be 12'-6".
3. Location of railroad traffic control device is based on the distance available between face of curb & sidewalk.
   0' to 6' - Locate device outside sidewalk.
   Over 6' - Locate device between face of curb and sidewalk.
4. Stop line to be perpendicular to edge of roadway, approx. 15' from nearest rail; or 8' from and parallel to gate when present.

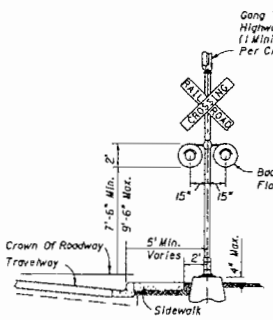


TYPE I

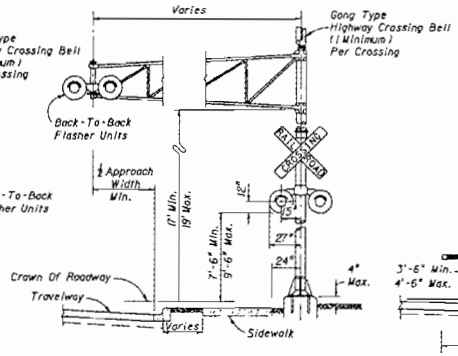


TYPE II

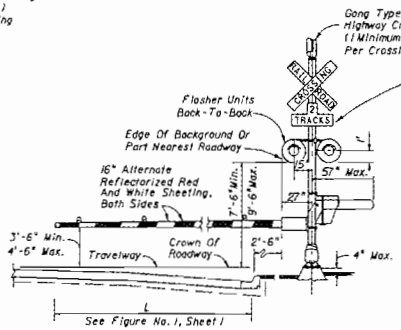


TYPE III

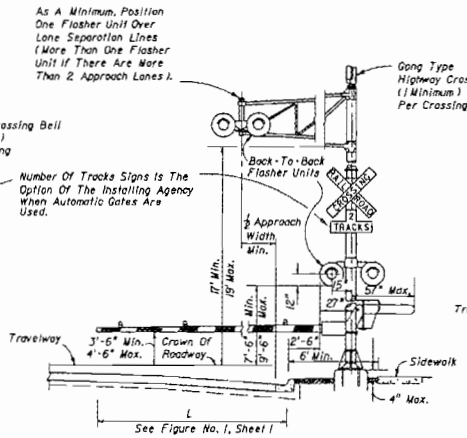


TYPE IV

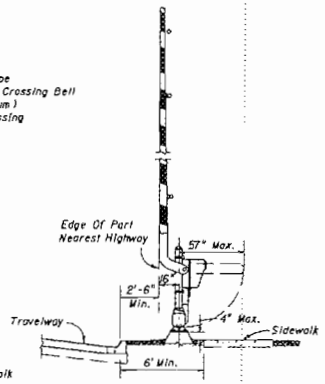


TYPE V

| | | | |
|---|---|---|---|
| | 2006 FDOT Design Standards | Last Revision 00 | Sheet No. 2 of 4 |
| | RAILROAD GRADE CROSSING TRAFFIC CONTROL DEVICES | Index No. 17882 | |

## RAILROAD CROSSING AT TWO (2)-LANE ROADWAY

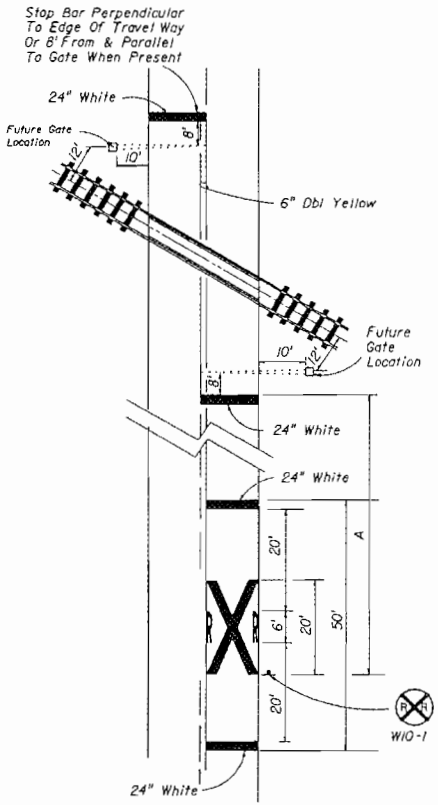


## RAILROAD CROSSING AT MULTI-LANE ROADWAY

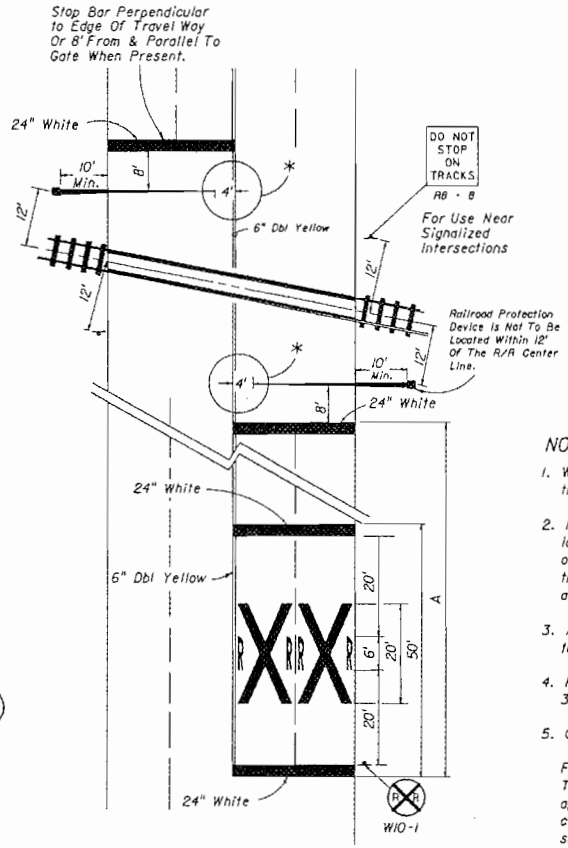


## RELATIVE LOCATION OF CROSSING TRAFFIC CONTROL DEVICES

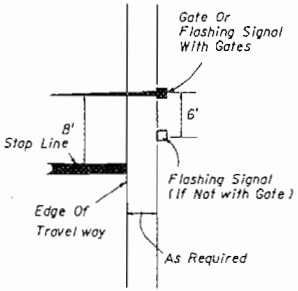


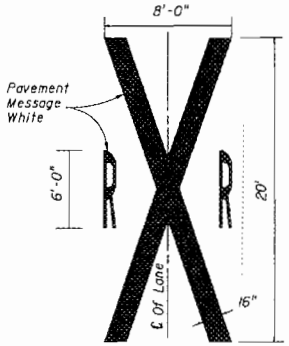


| SPEED MPH | "A" IN FT |
|---|---|
| 60 | 400 |
| 55 | 325 |
| 50 | 290 |
| 45 | 175 |
| 40 | 125 |
| 35 | 100 |
| 30 | 75 |
| URBAN | 50 MIN. |

## NOTES:

1. When computing pavement message, quantities do not include traverse lines.
2. Placement of sign W10-1 in a residential or business district, where low speeds are prevalent, the W10-1 sign may be placed a minimum distance of 100' from the crossing. Where street intersections occur between the R/R pavement message and the tracks an additional W10-1 sign and additional pavement message should be used.
3. A portion of the pavement markings symbol should be directly opposite the W10-1 sign.
4. Recommended location for FTP-61-04 or FTP-62-04 signs, 100' urban and 300' rural. See index 17355 for sign details.
5. Gate Length Requirements:

   For two-way undivided sections:
   The gate should extend to within 1' of the center line. On multiple approaches the maximum gate length may not reach to within 1' of the center line. For those cases, the distance from the gate to the center line shall be a maximum of 4'.

   For one-way or divided sections:
   the gate shall be of sufficient length such that the distance from the gate tip to the inside edge of pavement is a maximum of 4'.

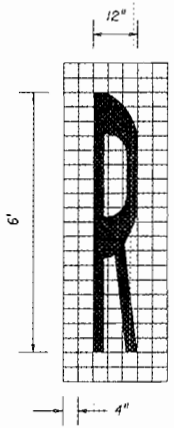


23

| | | | |
|---|---|---|---|
| 2006 FDOT Design Standards | | Last Revision: 07/01/05 | Sheet No. 3 of 4 |
| RAILROAD GRADE CROSSING TRAFFIC CONTROL DEVICES | | Index No. 17882 | |

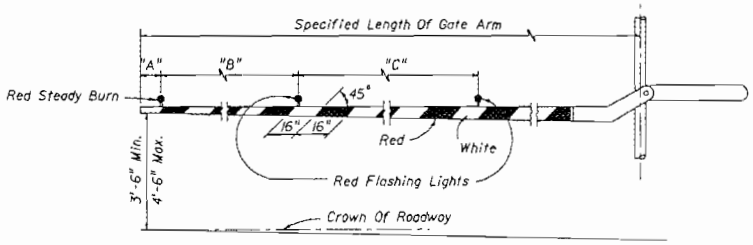


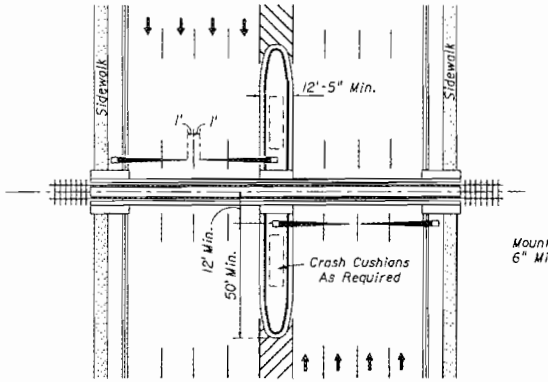


PLAN

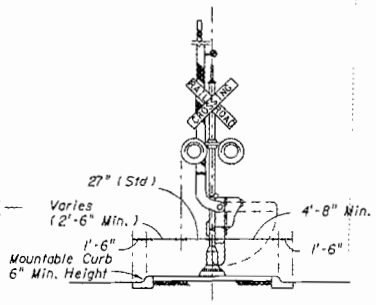


MEDIAN SECTION AT SIGNAL GATES

NOTE:
For additional information see the "Manual On Uniform Traffic Control Devices", Part VIII; The "Traffic Control Handbook", Part VIII; and AASHTO "A Policy On Geometric Design Of Streets And Highways".

RAILROAD GATE ARM LIGHT SPACING

| Specified Length Of Gate Arm | Dimension "A" | Dimension "B" | Dimension "C" |
|---|---|---|---|
| 14 Ft. | 6" | 36" | 5' |
| 15 Ft. | 18" | 36" | 5' |
| 16-17 Ft. | 24" | 36" | 5' |
| 18-19 Ft. | 28" | 41" | 5' |
| 20-23 Ft. | 28" | 4' | 5' |
| 24-28 Ft. | 28" | 5' | 5' |
| 29-31 Ft. | 36" | 6' | 6' |
| 32-34 Ft. | 36" | 7' | 7' |
| 35-37 Ft. | 36" | 9' | 9' |
| 38 And Over | 36" | 10' | 10' |

## MEDIAN SIGNAL GATES FOR MULTI LANE UNDIVIDED URBAN SECTIONS

(THREE OR MORE DRIVING LANES IN ONE DIRECTION, 45 mph OR LESS)