Memorandum

MIAMI-DADE COUNTY

Date: October 7, 2008

Agenda Item No. 8(A)(1)(C)

To: Honorable Chairperson Bruno A. Barreiro
and Members, Board of County Commissioners

From: George M. Burgess
County Manager

Subject: Ratification of Acceptance and Execution of Railroad Reimbursement Agreement (RA) with the Florida Department of Transportation (FDOT), CSX Transportation, Inc. (CSXT) and County under Financial Project Number **41820815701**

RECOMMENDATION

It is recommended that the Board approve the attached resolution ratifying the acceptance and execution, pursuant to provisions of the Aviation Department's Expedite Ordinance No. 95-64, codified as Section 2-285(6) of the Code of Miami-Dade County, of the attached Railroad Reimbursement Agreement (RA) No. 41466015701 among Miami-Dade County (County), the State of Florida Department of Transportation (FDOT), and CSX Transportation, Inc. (CSXT), for the reconstruction of railroad crossing devices at the railroad crossing at Perimeter Road in connection with the necessary roadway improvements of FDOT project FM No. 41820815701 from NW 72nd Ave to NW 57th Ave.

SCOPE

The project associated with this RA is located within District Six.

FISCAL IMPACT

The estimated construction cost of the project is $350,000.00 and will be performed by CSXT and paid for by FDOT. After completion of the crossing signals, 50% of the yearly maintenance cost for the signals, which will amount to $1573.00 based on the currently estimated total annual maintenance cost of $3,146.00, shall be paid by the Aviation Department in accordance with the Schedule of Annual Cost of Automatic Highway Grade Crossing Traffic Control devices as reflected in the exhibit attached to the RA.

PROJECT MONITOR

This Railroad Reimbursable Agreement will be managed by Jose A. Ramos, MDAD Chief of Planning.

BACKGROUND

The Florida Department of Transportation Perimeter Road Improvement project between NW 72nd Avenue and NW 57th Avenue necessitates the reconstruction of the existing grade crossing and the installation of the new automatic railroad grade crossing traffic devices at Perimeter Road between NW 57th Avenue and NW 72nd Avenue.

The attached Railroad Reimbursement Agreement between FDOT, CSXT, and the County will provide for the parties' obligations regarding this work, including maintenance responsibilities of CSXT, FDOT, and Miami-Dade County as they relate to the new railroad crossing devices on Perimeter Road. CSXT will perform the work, FDOT will reimburse CSXT for such work, and the County's obligations will be limited to a 50% participation in the future annual maintenance costs. Total maintenance costs are estimated to be $3,146 annually, with the County's portion to be 50% of that amount, or $1,573 per year.

Assistant County Manager

MEMORANDUM

(Revised)

TO: Honorable Chairman Bruno A. Barreiro and Members, Board of County Commissioners

DATE: October 7, 2008

FROM: R. A. Cuevas, Jr. County Attorney

SUBJECT: Agenda Item No. 8(A)(1)(C)

Please note any items checked.

_____ **"4-Day Rule" ("3-Day Rule" for committees) applicable if raised**

_____ **6 weeks required between first reading and public hearing**

_____ **4 weeks notification to municipal officials required prior to public hearing**

_____ **Decreases revenues or increases expenditures without balancing budget**

_____ **Budget required**

_____ **Statement of fiscal impact required**

_____ **Bid waiver requiring County Manager's written recommendation**

_____ **Ordinance creating a new board requires detailed County Manager's report for public hearing**

_____ **Housekeeping item (no policy decision required)**

_____ **No committee review**

Approved _____ Mayor
Veto _____
Override _____

Agenda Item No. 8(A)(1)(C)
10-7-08

RESOLUTION NO. _____

RESOLUTION RELATING TO MIAMI INTERNATIONAL AIRPORT; RATIFYING EXECUTION BY THE MAYOR'S DESIGNEE OF A RAILROAD REIMBURSEMENT AGREEMENT UNDER FINANCIAL PROJECT NUMBER 41820815701 AMONG THE FLORIDA DEPARTMENT OF TRANSPORTATION (FDOT), CSX TRANSPORTATION, INC. (CSXT), AND MIAMI-DADE COUNTY, UNDER WHICH CSXT WILL CONSTRUCT A GRADE CROSSING ON PERIMETER ROAD BETWEEN N.W. 72ND AVENUE AND N.W. 57TH AVENUE, FDOT WILL REIMBURSE CSXT FOR THE COST OF CONSTRUCTION, AND THE COUNTY WILL BE RESPONSIBLE FOR FIFTY PERCENT OF THE FUTURE MAINTENANCE COSTS OF THE GRADE CROSSING

WHEREAS, this Board desires to accomplish the purposes outlined in the accompanying memorandum and document, copies of which are incorporated herein by reference,

NOW, THEREFORE, BE IT RESOLVED BY THE BOARD OF COUNTY COMMISSIONERS OF MIAMI-DADE COUNTY, FLORIDA, that this Board approves, ratifies and confirms the actions of the Mayor's Designee, pursuant to the provisions of Section 2-285(6) of the Code of Miami-Dade County, in accepting and executing a Railroad Reimbursement Agreement under Financial Project Number 41820815701 among the Florida Department of Transportations (FDOT), CSX Transportation, Inc., (CSXT), and Miami-Dade County, under which CSXT will construct the grade crossing on Perimeter Road at Miami International Airport between N.W. 72nd Avenue and N.W. 57th Avenue, FDOT will reimburse CSXT for its costs in connection therewith, and the County will be responsible for payment of

fifty percent (50%) of the future maintenance costs of the grade crossing that are estimated to be $3,146 annually, of which the County's 50% portion will be $1,573.00 annually.

The foregoing resolution was offered by Commissioner , who moved its adoption. The motion was second by Commissioner and upon being put to a vote, the vote was as follows:

Bruno A. Barreiro, Chairman
Barbara J. Jordan, Vice-Chairwoman

Jose "Pepe" Diaz	Audrey M. Edmonson
Carlos A. Gimenez	Sally A. Heyman
Joe A. Martinez	Dennis C. Moss
Dorrin D. Rolle	Natacha Seijas
Katy Sorenson	Rebeca Sosa
Sen. Javier D. Souto	

The Chairperson thereupon declared the resolution duly passed and adopted this 7th day of October, 2008. This resolution shall become effective ten (10) days after the date of its adoption unless vetoed by the Mayor, and if vetoed, shall become effective only upon an override by this Board.

MIAMI-DADE COUNTY, FLORIDA
BY ITS BOARD OF
COUNTY COMMISSIONERS

HARVEY RUVIN, CLERK

By:_____
Deputy Clerk

Approved by County Attorney as
to form and legal sufficiency.

Thomas P. Abbott

RECEIVED
JUL 14 2008
AVIATION PLANNING

STATE OF FLORIDA DEPARTMENT OF TRANSPORTATION
RAILROAD REIMBURSEMENT AGREEMENT
GRADE CROSSING AND CROSSING TRAFFIC CONTROL DEVICES
COUNTY OF MIAMI DADE
SOUTH FLORIDA RAIL, CORRIDOR ONLY

Financial Project I.D.	Road Name or Number	County Name	Parcel & R/W Number	FAP Number
41820815701	Perimeter Road	MIAMI DADE	1(X&S-B)	N/A

THIS AGREEMENT, made and entered into this _____ day of _____, 200__ by and between the **STATE OF FLORIDA DEPARTMENT OF TRANSPORTATION**, hereinafter called the **DEPARTMENT**, and **CSX TRANSPORTATION, INC.**, a corporation of Virginia, with its place of business in the City of Jacksonville, County of Duval, STATE OF FLORIDA, and authorized to do business in the State of Florida, hereinafter called CSXT and the COUNTY of **MIAMI DADE**, a political subdivision of the State of Florida, hereinafter called the **COUNTY**.

WITNESSETH:

WHEREAS, the **DEPARTMENT** and **CSXT** entered into a Purchase and Sale Agreement for the South Florida Rail Corridor, hereinafter called **SFRC** described herein on May 11, 1988, at which time the **DEPARTMENT** became the owner of said property and **CSXT** retained an Easement for Rail Freight Operations within the **SFRC**, and under which **CSXT** manages and maintains the property on behalf of the **DEPARTMENT** pursuant to the Phase A Operating and Management Agreement, hereinafter called **Phase A Agreement** entered into on May 11, 1988 by **CSXT** and the **DEPARTMENT** and made a part of this Agreement by reference thereto, and

WHEREAS, in the event of termination of the aforesaid **Phase A Agreement** as therein provided, the parties hereto desire that the provisions of the **Phase B Agreement** will thereafter govern **CSXT's** conduct of rail freight and intercity rail passenger operations over the State Property in a manner consistent with the other uses of the State Property. Upon the Commencement Date hereof, **CSXT** shall transfer to the **DEPARTMENT** the administration by **CSXT** (pursuant to Section 4.10 of the **Phase A Agreement**) of all agreements pertaining to the maintenance, repair and operation of existing roadway and highway crossings, crossing protection devices and railway interlocking and interchange facilities on the State Property, and

Whereas, the **DEPARTMENT** is constructing, reconstructing, or otherwise changing a portion of the Public Road System, designated by the DEPARTMENT as FM No. 41820815701, on Perimeter Road, which crosses at grade the State Rail Corridor and CSXT Property at Railroad MP: 1040.6, FDOT/AAR Crossing Number 628509X, at or near CITY OF MIAMI, Florida as shown on DEPARTMENT"S Plan Sheet NO. 22-24, 39, attached hereto as a part hereof;

NOW, THEREFORE, in consideration of the mutual undertakings as herein set forth, the parties hereto agree as follows:

1. The **COUNTY** shall be responsible for the cost to maintain the said Road at grade, and necessary approaches thereof, across the **DEPARTMENT'S** right-of-way, over its tracks and through the Railroad Easement retained by **CSXT** at the hereinabove-referenced location.

2. If the **COUNTY** so requests, **CSXT** shall provide, furnish or have furnished, all necessary material required for, and will construct at **DEPARTMENT'S** expense on behalf of the County a Standard Railroad Crossing Type CONCRETE in accordance with the **DEPARTMENT'S** Standard Index No. 560 by reference made a part hereof, as well as automatic railroad grade

crossing traffic control devices at said location an accordance with (1) the attached detailed statement of the work, plans, and specifications; (2) the **DEPARTMENT'S** Plans and Standard Index Number 17882, and (3) FHPM 1-4-3 and FHPM 6-6-2-1, or Rule 14-46.002. F.A.C. all of which by reference are made a part hereof. The **DEPARTMENT, on behalf of the County** shall be responsible for the costs of Maintenance of Traffic during the construction period.

Upon completion of the crossing, **CSXT** shall be responsible for the maintenance of said crossing in accordance with the **Phase A Agreement** and the **COUNTY** shall be responsible for the maintenance cost of the highway roadbed and surface outside the railway ties and the crossing surface. However, it is expressly understood and agreed that **CSXT** and/or the **DEPARTMENT** may, at their option and upon notification to the **COUNTY**, perform such periodic maintenance work and bill the **COUNTY** directly for costs thus incurred that are the responsibility of the **COUNTY**.

3. The **DEPARTMENT** at its discretion may arrange for the synchronization of the railroad crossing devices with existing or proposed highway traffic control devices at Perimeter Road, and attendant installation of Type IV, Class III. None of the parties shall disconnect sequence without prior notice to the other. Each party shall maintain it's interconnect cable.

   After installation of said signals is completed, fifty (50) percent of the expense thereof in maintaining the same shall be borne by the **COUNTY** as enumerated by the Schedule of Annual Cost of Automatic Highway Grade Crossing Traffic Control Devices attached hereto and by this reference made a part hereof and subject to future revision. And fifty (50) percent of the cost shall be borne by the **DEPARTMENT** pursuant to the Phase A Agreement. After said signals have been installed and found to be in satisfactory working order by the parties hereto, the same shall be immediately put into service, operated and maintained by **CSXT** so long as said **CSXT** or successors or assigns shall operate the said signals at said grade crossing; or until it is agreed between the parties hereto that the signals are no longer necessary, or until the said crossing is abandoned; or legal requirements occur which shall cease operation of signals thereat. **CSXT** agrees that any future relocation or adjustment of said signals shall be performed by **CSXT** but at the expense of the party initiating such relocation. Upon relocation, the maintenance responsibilities shall be in accordance with the provisions of this agreement. It is further agreed that the cost of maintaining any additional or replacement signal equipment at the same location will be shared as provided above.

4. All work contemplated at this crossing shall at all times be subject to the approval of the **DEPARTMENT** and Chief Engineer or his representative. **CSXT'S** Division Engineer and/or Superintendent shall receive at least seventy-two (72) hours notice prior to the performance of any work within the limits of the railroad right-of-way.

5. Unless otherwise agreed upon herein, the **COUNTY** agrees to ensure that the advance warning signs and railroad crossing pavement marking will conform to the Department of Transportation Manual on Uniform Traffic Control Devices within thirty (30) days of notification that the railroad signal improvements have been completed and that such signs and pavement markings will be continually maintained at an acceptable level.

6. The **DEPARTMENT, ON BEHALF OF THE COUNTY** will reimburse **CSXT** for the cost of watchmen or flagging service when the **DEPARTMENT'S** contractor is performing work that requires movement of equipment, employees or trucks across the tracks of the **DEPARTMENT** or when at times **CSXT** and/or the **DEPARTMENT** agree that such a service is necessary.

7. All contractors working in the **SFRC** are required to have Railroad Protective Public Liability and Railroad Protective Property Damage Liability insurance in a combined amount of $5,000,000.00, for all personal injuries, death or property damage, per occurrence arising during

the policy period. The maximum dollar amounts of coverage to be reimbursed by Federal funds, with respect to bodily injury, death or property damage is limited to a combined amount of $10,000,000.00 per occurrence unless approval for larger amounts by the FHWA Division Administrator is made a part of this Agreement.

Contractor will furnish **CSXT** a Certificate of Insurance showing that the contractor carries liability insurance (applicable to the job in question) in the amount of $5,000,000.00 for all personal injuries, death or property damage, per occurrence arising during the policy period. Such insurance is to conform with the requirements of 23 C.F.R., Subchapter G, Part 646, Subpart A, and any supplements thereto or revisions thereof.

8. The **DEPARTMENT, ON BEHALF OF THE COUNTY** will bear the cost of relocation of any utility (wire or pipe) due to **DEPARTMENT** requirements, that has compensable interest on the right-of-way occasioned by the construction of said crossing and occupancy of the **DEPARTMENT'S** property, unless the original agreement creating the occupation of such utility requires the Utility to relocate said line.

9. **CSXT** hereby agrees to install and/or adjust the necessary parts of its facilities in accordance with the provisions set forth in the:

   DEPARTMENT Procedure 725-080-002 Appendix D.4 and Rule 14-46.002 "Responsibility for the Cost of Railroad-Highway Crossing", Florida Administrative Code and/or the Federal Highway Administration's Federal Aid-Highway Policy Guide, 23 C.F.R. Subchapter B, Part 140, Subpart 1; and 23 C.F.R. Subchapter G. Part 646, Subpart B. and any supplements thereto or revisions thereof, which, by reference hereto, are made a part hereof. **CSXT** further agrees to do all such work with its own forces or by a contractor paid under a contract held by **CSXT** under the supervision and approval of the **DEPARTMENT**, and the Federal Highway Administration, when applicable.

10. All labor, services, materials, and equipment furnished by **CSXT** in carrying out future maintenance and modifications of the said crossing that are the responsibility of the **COUNTY** shall be billed by **CSXT** directly to the **COUNTY**. Separate records as to costs of contract bid terms and force account items performed for **CSXT** shall be furnished by **CSXT** to the **COUNTY**.

11. **CSXT** has determined that the method to be used in developing future relocation or installation cost shall be actual and related indirect costs accumulated in accordance with a work order accounting procedure prescribed by the applicable Federal or State regulatory body.

12. Upon completion of the crossing improvements and conclusion of work, all billing for future maintenance and modifications, which are the responsibility of the **COUNTY**, will be as follows: **CSXT** shall, within one hundred eighty (180) days, furnish the **COUNTY** with two (2) copies of its final and complete billing of all costs incurred in connection with the work performed hereunder, such statement to follow as closely as possible the order of items contained in the estimate furnished to the **COUNTY**, by **CSXT**. The totals for labor, overhead, travel expense, transportation, equipment, material and supplies, handling costs and other services shall be shown in such a manner as will permit ready comparison with the approved plans and estimates. Materials shall be itemized where they represent major components of cost in the relocation following the pattern set out in the approved estimate as closely as possible.

    Salvage credits from recovered and replaced permanent and recovered temporary materials shall be reported in said bills in relative position with the charge for the replacement or the original charge for temporary use.

The final billing shall show the description and site of the Project, the date on which the first work was performed, or, if preliminary engineering or right-of-way items are involved, the date on which the earliest item of billed expense was incurred; the date on which the last work was performed or the last item of billed expense was incurred; and the location where the records and accounts billed can be audited. Adequate reference shall be made in the billing to where the records and accounts billed can be audited. Adequate reference shall be made in the billing to **CSXT'S** records, accounts and other relevant documents. All cost records and accounts shall be subject to audit by a representative of the **COUNTY**. Upon receipt of invoices, prepared in accordance with the provisions of the above-indicated Reimbursement Policy, the **COUNTY** agrees to reimburse **CSXT** in the amount of such costs approved by the **COUNTY** auditor.

13. Payment shall be made only after receipt and approval of goods and services unless advance payments are authorized by the State Comptroller under Section 215.422(14), Florida Statutes, authorizes advance payments.

14. In accordance with Section 287.056, Florida Statutes, the following provisions are in this Agreement: If this contract involves units of deliverables, then such units must be received and accepted in writing by the Contract Manager prior to payments. Bills for fees or other compensation for services or expenses shall be submitted in detail sufficient for a proper pre-audit and post-audit thereof.

15. In accordance with Section 215.422 Florida Statutes, the following provisions are in this Agreement: Contractors providing goods and services to the **DEPARTMENT** should be aware of the following time frames. Upon receipt, the **DEPARTMENT** has five (5) working days to inspect and approve the goods and services, unless the Agreement specifies otherwise. The **DEPARTMENT** has twenty (20) working days to deliver a request for payment (voucher) to the Department of Banking and Finance. The twenty (20) days are measured from the latter of the date the invoice is received, or the date the goods or services are received, inspected, and approved.

    If a payment is not available within forty (40) days, a separate interest penalty at a rate as established pursuant to Section 215.422(3)(b), Florida Statutes, will be due and payable in addition to the invoice amount, to the Contractor, interest penalties of less than one (1) dollar will not be enforced unless the Contractor requests payment. Invoices, which have to be returned to a Contractor because of Contractor preparation errors, will result in a delay in the payment. The invoice payment requirements do not start until a properly completed invoice is provided to the **DEPARTMENT**.

    A Vendor Ombudsman has been established within the Department of Banking and Finance. The duties of the individual include acting as an advocate for contractors/vendors who may be experiencing problems in obtaining timely payment(s) from a state agency. The Vendor Ombudsman may be contacted at (850) 410-9724, or by calling the State Comptroller's Hotline, 1-800-848-3792.

16. Records of costs incurred under terms of this Agreement for future projects shall be maintained and made available upon request to the **COUNTY** and the **DEPARTMENT** at all times during the period of this Agreement and for three years after final payment is made. Copies of these documents and records shall be furnished to the **COUNTY** and the **DEPARTMENT** upon request.

Records of costs incurred includes the Contractor's general accounting records and the project records, together with supporting documents of the Contractor and subcontractors considered necessary by the **COUNTY** and the **DEPARTMENT** for a proper audit of costs.

17. In the event this contract is for services in excess of TWENTY-FIVE THOUSAND DOLLARS ($25,000.00) and a term of more than one year, the provisions of Section 339.135(6)(a), Florida Statutes are hereby incorporated;

    The **DEPARTMENT** during any fiscal year, shall not expend money, incur any liability, or enter into any contract which, by its terms, involves the expenditures of money in excess of the amounts budgeted as available for expenditure during such fiscal year. Any contract, verbal or written, made in violation of this subsection is null and void, and no money may be paid on such contract. The **DEPARTMENT** shall require a statement from the Comptroller of the **DEPARTMENT** that such funds are available prior to the entering into any such contract or other binding commitment of funds.

    Nothing herein contained shall prevent the making of contracts for periods, exceeding one year, but any contract so made shall be executory only for the value of the services to be rendered or agreed to be paid for in succeeding fiscal years, and this paragraph shall be incorporated verbatim in all contracts of the **DEPARTMENT** which are for an amount in excess of TWENTY-FIVE THOUSAND DOLLARS ($25,000.00) and which have a term for a period of more than one year.

18. Attached hereto, and by reference made a part hereof, are plans and specifications of the work to be performed by CSXT pursuant to the terms hereof, and an estimate of the cost in the amount of **$350,000.00**. All work performed by CSXT pursuant hereto, shall be performed to these plans and specifications as approved by the **DEPARTMENT**, and the Federal Highway Administration if federal aid participating; and all subsequent plan changes shall likewise be approved by the DEPARTMENT and the Federal Highway Administration, where applicable.

19. If the DEPARTMENT and CSXT concur that an upgrading and/or betterment of the crossing beyond that contemplated in this agreement is desirable, the any cost associated with such upgrading or betterment shall be paid from the maintenance account provided for in the Phase A Agreement. If the COUNTY wishes to upgrade and/or better the crossing, such upgrade or betterment shall be paid by the COUNTY.

20. All salvage value of materials resulting from the work contemplated herein shall be subject to the salvage provisions of the Phase A Agreement.

21. In accordance with Section 287.133(2)(a), Florida Statutes, the following provisions are included in this Agreement:

    > A person or affiliate who has been placed on the convicted vendor list following a conviction for a public entity crime may not submit a bid on a contract to provide any goods or services to a public entity, may not submit a bid on a contract with a public entity for the construction or repair of a public building or public work, may not submit bids on leases for real property to a public entity, may not be awarded or perform work as a contractor, supplier, subcontractor, or consultant under a contract with any public entity, and may not transact business with any public entity in excess of the threshold amount provided in Section 287.017 for CATEGORY TWO for a period of 36 months from the date of being placed on the convicted vendor list.

22. In accordance with Section 287.0582, Florida Statutes, the following provision is included in this Agreement:

> The **DEPARTMENT'S** obligation to pay under this section is contingent upon an annual appropriation by the Florida Legislature.

23. The **DEPARTMENT** reserves the right to unilaterally cancel this Agreement for refusal by the contractor or CSXT to allow public access to all documents, papers, letters, or other material subject to the provisions of Chapter 119, Florida Statutes, and made or received in conjunction with this Agreement.

24. Should the use of said crossing be abandoned due to removal of the roadway then all rights hereby to the **COUNTY** shall thereupon cease and terminate and the **COUNTY** will, at its sole cost and in a manner satisfactory to the **DEPARTMENT** remove said crossing and restore the **DEPARTMENT'S** property to the condition previously found, provided that the **DEPARTMENT** may, at its option, remove the said crossing and restore its property, and the **COUNTY** will, in such event, upon bill rendered, pay to the **DEPARTMENT** the entire cost incurred by it in such removal and restoration, provided such costs are accrued as specified in Paragraph 9.

25. ~~**CSXT** covenants and agrees that it will indemnify and hold harmless for **DEPARTMENT'S** officers, agents, and employees from any claim, loss, damage, cost charge, or expense arising out of any action, neglect, omission, or delay by **CSXT** during the performance of the contract, whether direct or indirect, and whether to any person or property to which the **DEPARTMENT** or said parties may be subject, except that neither **CSXT** nor any of its subcontractors will be liable under this section for damages arising out of injury or damage to persons or property directly caused or resulting from sole negligence of the **DEPARTMENT**, or any of its officers, agents, or employees.~~

26. Upon execution this maintenance Agreement shall supersede all provisions, relating to said crossing, contained in any previous maintenance Agreement and shall become the permanent maintenance Agreement of record.

27. Provision twenty-five (25) was stroked through prior to the agreement execution.

IN WITNESS WHEREOF, the parties hereto have caused these presents to be executed by their duly authorized officers the day and year first written above.

STATE OF FLORIDA
DEPARTMENT OF TRANSPORTATION

By: _____

TITLE: Director of Transportation Development

CSX TRANSPORTATION, INC.:

By: _____

TITLE: John L. West
Vice President &
Chief Engineering Officer

MIAMI DADE COUNTY

_____

Approved as to form
and legal sufficiency

Assistant County Attorney

8/22/08

Approved as to Form, Legality and Execution	Approved as to Funds Available	Approved as to FHMP Requirements
By: _____	By: _____	By: _____
Attorney FDOT	Fiscal FDOT	FHWA
Date:_____	Date:_____	Date:_____

STATE OF FLORIDA DEPARTMENT OF TRANSPORTATION

725-090-09
RAIL
05/02

WORK DESCRIPTION
GRADE CROSSING TRAFFIC CONTROL DEVICES

FINANCIAL PROJECT NO.	ROAD NAME OR NUMBER	COUNTY NAME	PARCEL & R/W NUMBER	FAP NUMBER
41820815701	Perimeter Rd	MIAMI-DADE	1(X&S-B)	N/A

RAILROAD COMPANY

CSX Transportation

A. JOB DESCRIPTION & LOCATION: Road Realignment on Perimeter Rd. RR MP

B. TYPE OF ROADWAY FACILITY: _____

C. FDOT/AAR XING NO.: 628509X RR MILE POST TIE: 1040.6

D. TYPE CROSSING PROPOSED: IV CLASS: III DOT INDEX NO.: 560,17882

E. STATUS AND PROPOSAL:

1. EXISTING DEVICES: (See Agreement dated _____)
   - a. ____ None-New Crossing.
   - b. ____ Crossbuck and Disk.
   - c. ____ Flashing Signals with Disk.
   - d. ____ Flashing Signals with Cantilever.
   - e. x Flashing Signals with Gates.
   - f. ____ Flashing Signals with Cantilever and Gates.

2. PROPOSED DEVICES: (Safety Index Rating _____)
   - a. ____ No revision required.
   - b. ____ Crossbuck and Disk.
   - c. ____ Flashing Signals and Disk.
   - d. ____ Flashing Signals with Cantilever.
   - e. x Flashing Signals with Gates.
   - f. ____ Flashing Signals with Cantilever and Gates.
   - g. ____ Relocate existing signal devices:
     - (1) ____ (With-Without) addition of Gates.
     - (2) ____ (With-Without) synchronization with highway traffic signals.
     - (3) ____ (With-Without) constant warning time.

F. COMMUNICATION AND/OR POWER LINE ADJUSTMENTS

1. ____ By Others (N/A Company.)
2. ____ By Railroad Company.

G. AUTHORITY REQUESTED: (Draft attached: ◉ Yes ○ No.)

1. x Agreement (Third Party Participating Miami Dade County)
2. ____ Supplemental Agreement No. _____
3. ____ Crossing Permit.
4. ____ Estimate for Change Order No. _____
5. ____ Letter of Authority.
6. ____ Letter of Confirmation (No Cost to Department).

H. OTHER REMARKS:

13

Negotiations to be completed by:

Signal installation target date: 12/31/2009

Synchronization: (Draft attached ○ Yes ◉ No.)

FM # 418208-1-57-01

PERIMETER ROAD

CROSSING # 628509X

RR MP: 1040.6

ROAD REALIGNMENT $350,000.00

Estimate Prepared By:

Paola G. Baez, E.I.

Intermodal and Rail Programs Administrator

Florida Department of Transportation

1000 NW 111 Avenue, Room 6114

Miami, Florida 33172

STATE OF FLORIDA DEPARTMENT OF TRANSPORTATION

RAILROAD GRADE CROSSING TRAFFIC CONTROL DEVICES

725-090-41
RAIL
OGC - 01/06

FINANCIAL PROJECT NO.	ROAD NAME OR NUMBER	COUNTY NAME	PARCEL & R/W NUMBER	FAP NUMBER
41820815701	Perimeter Road	MIAMI-DADE	1(X&S-B)	N/A

COMPANY NAME: CSX Transportation

A. FDOT/AAR XING NO.: 628509X RR MILE POST TIE: 1040.6

B. TYPE SIGNALS PROPOSED IV CLASS III DOT INDEX: 560, 17882

SCHEDULE OF ANNUAL COST OF AUTOMATIC HIGHWAY GRADE CROSSING TRAFFIC CONTROL DEVICES

Annual Maintenance Cost Exclusive of Installation

CLASS	DESCRIPTION	COST*
I	Flashing Signals - One Track	$2,086.00
II	Flashing Signals - Multiple Tracks	$2,760.00
III	Flashing Signals and Gates - One Track	$3,146.00
IV	Flashing Signals and Gates - Multiple Tracks	$3,950.00

AUTHORITY: FLORIDA ADMINISTRATIVE RULE 14-57.011
Public Railroad-Highway Grade Crossing Costs

EFFECTIVE DATE: July 22, 1982

GENERAL AUTHORITY: 334.044, F.S.

SPECIFIC LAW IMPLEMENTED: 335.141, F.S.

*This schedule will become effective July 1, 2006 and will be reviewed every 5 years and revised as appropriate based on the Consumer Price Index for all Urban Consumers published by the U.S. Department of Labor.

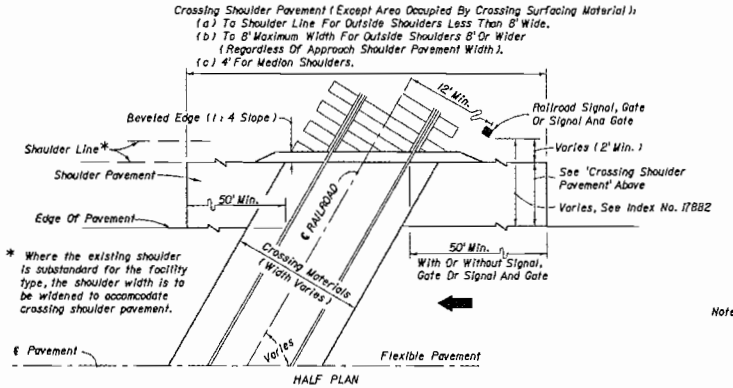

HALF PLAN

ROADWAYS WITH FLUSH SHOULDERS

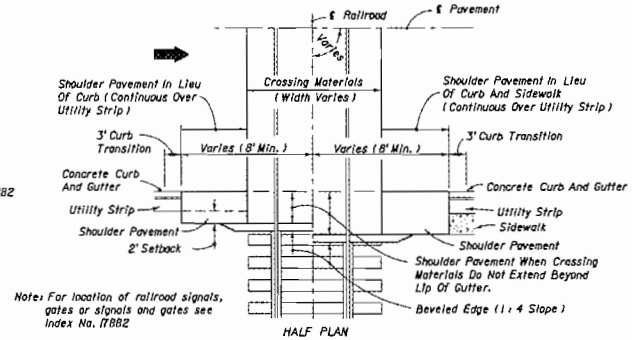

HALF PLAN

CURBED ROADWAYS

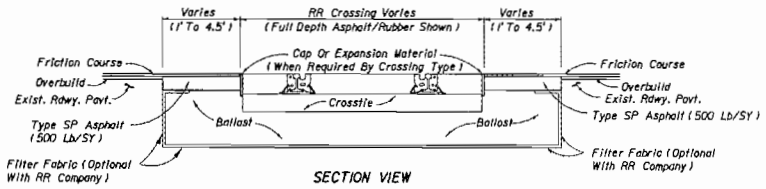

SECTION VIEW

TYPICAL CROSSING MATERIAL REPLACEMENT AT RR CROSSINGS

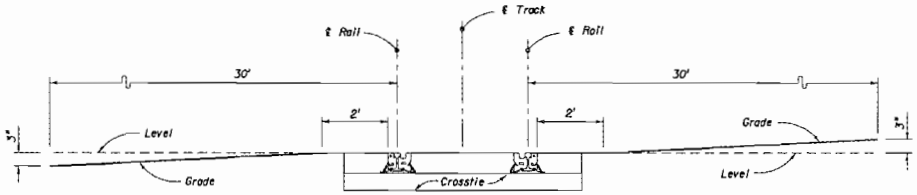

To prevent low-clearance vehicles from becoming caught on the tracks, the crossing surface should be at the same plane as the top of the rails for a distance of 2 feet outside the rails. The surface of the highway should also not be more than 3 inches higher or lower than the top of the nearest rail at a point 30 feet from rail unless track superelevation makes a different level appropriate. Vertical curves should be used to traverse from the highway grade to a level plane at the elevation of the rails. Rails that are superelevated, or a roadway approach section that is not level, will necessitate a site specific analysis for rail clearances.

VERTICAL ROADWAY ALIGNMENT THROUGH A RAILROAD CROSSING

CROSSING SURFACES	
Type	Definition
C	Concrete
R	Rubber
RA	Rubber/Asphalt

STOP ZONE FOR RUBBER CROSSING	
Design Speed (mph)	Zone Length (Distance From Stop)
45 Or Less	250'
50 - 55	350'
60 - 65	500'
70	600'

Notes:

1. Type R Crossings are NOT to be used for multiple track crossings within zones for an existing or scheduled future vehicular stop. Zone lengths are charted above.
2. Single track Type R Crossings within the zones on the chart may be used unless engineering or safety considerations dictate otherwise.

General Notes

1. The Railroad Company will furnish and install all track bed (ballast), crossties, rails, crossing surface panels and accessory components. All pavement material, including that through the crossing, will be furnished and installed by the Department or its Contractor, unless negotiated otherwise.
2. When a railroad grade crossing is located within the limits of a highway construction project, a transition pavement will be maintained at the approaches of the crossing to reduce vehicular impacts to the crossing. The transition pavement will be maintained as appropriate to protect the crossing from low clearance vehicles and vehicular impacts until the construction project is completed and the final highway surface is constructed.
3. The Central Rail Office will maintain a list of currently used Railroad Crossing Products and will periodically distribute the current list to the District Offices as the list is updated.
4. The Railroad Company shall submit engineering drawings for the proposed crossing surface type to the Construction Project Engineer and/or the District Rail Office for concurrence along with the List of Railroad Crossing Products. The approved engineering drawings of the crossing surface type shall be made a part of the installation agreement.
5. Sidewalks shall be constructed through the crossing between approach sidewalks of the crossing. Sidewalks shall be constructed with appropriate material to allow unobstructed travel through the crossing in accordance with ADA requirements.
6. All asphalt shall be installed in accordance with Index No. 514 and Section 300 of the Standard Specifications.

STATE OF FLORIDA DEPARTMENT OF TRANSPORTATION	2006 FDOT Design Standards	Last Revision 04	Sheet No. 1 of 1
	RAILROAD CROSSINGS	Index No. 560	

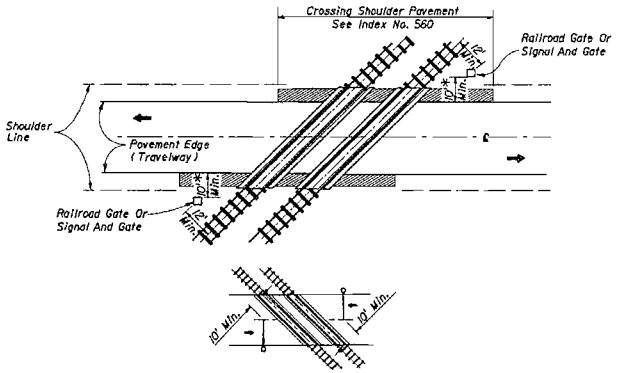

SIGNAL PLACEMENT AT RAILROAD CROSSING
(2 - LANE DESIGN)

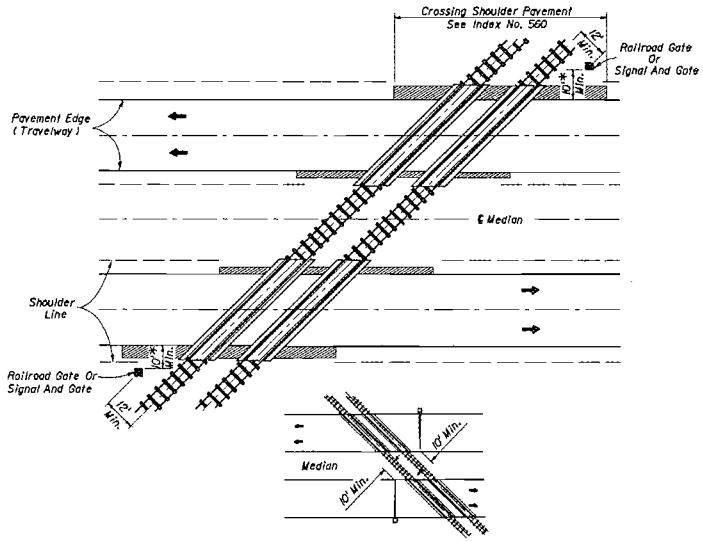

SIGNAL PLACEMENT AT RAILROAD CROSSING
(4 - LANE DESIGN)

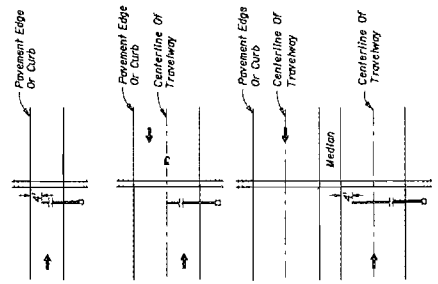

Note :
Arrows denote direction of travel not lane indication

FIGURE I
Gate Length Requirements
See Note 5 Sheet 3

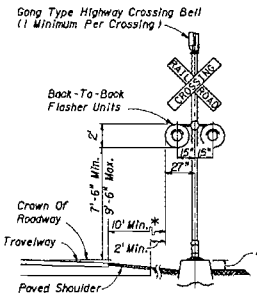

TYPE I

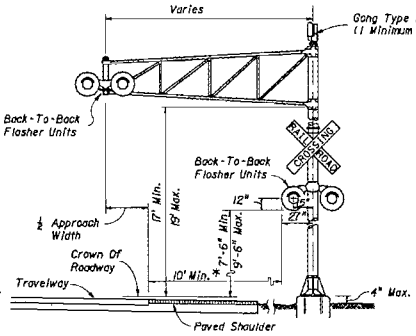

TYPE II

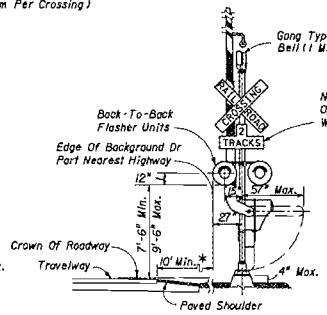

TYPE III

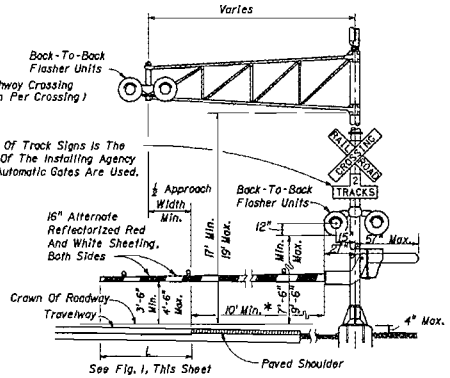

TYPE IV

General Notes

1. No guardrail is proposed for signals; however, some form of impact attenuation device may be specified for certain locations.
2. Advance flasher to be installed when and if called for in plans or specifications.
3. Top of foundation shall be no higher than 4" above finished shoulder grade.
4. Type of traffic control device
   - I Flashing signals
   - II Flashing signals with cantilever
   - III Flashing signals with gate
   - IV Flashing signals with cantilever & gate
   - V Gate
5. Class of traffic control devices
   - I Flashing signals - one track
   - II Flashing signals - multiple tracks
   - III Flashing signals and gates - one track
   - IV Flashing signals and gates - multiple tracks

* When 10' is deemed impracticle the control device can be located as close as 2' from the edge of a paved shoulder but not less than 6' from the edge of the near traffic lane.

Note :
Two separate foundations may be required (one for signals, one for gate), depending on type of equipment used.

STATE OF FLORIDA DEPARTMENT OF TRANSPORTATION	2006 FDOT Design Standards	Last Revision 07/01/05	Sheet No. 1 of 4
	RAILROAD GRADE CROSSING TRAFFIC CONTROL DEVICES	Index No. 17882	

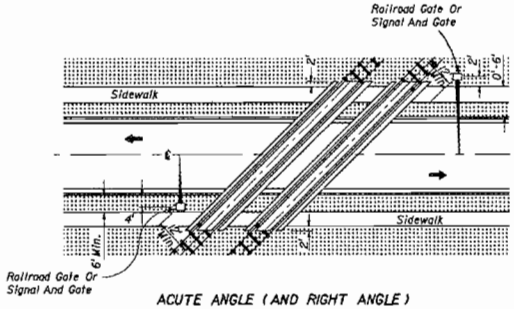

ACUTE ANGLE (AND RIGHT ANGLE)

SIGNAL PLACEMENT AT RAILROAD CROSSING (2 LANES, CURB & GUTTER)

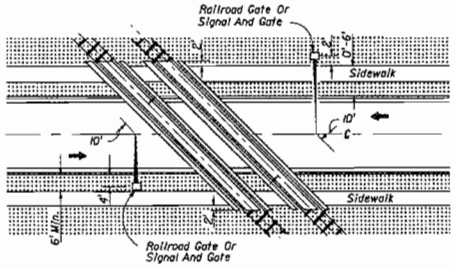

OBTUSE ANGLE

SIGNAL PLACEMENT AT RAILROAD CROSSING (2 LANES, CURB & GUTTER)

GENERAL NOTES

1. The location of flashing signals and stop lines shall be established based on future (or present) installation of gate with appropriate track clearances.
2. Where plans call for railroad traffic control devices to be installed in curbed medians, the minimum median width shall be 12'-6".
3. Location of railroad traffic control device is based on the distance available between face of curb & sidewalk.
   0' to 6' - Locate device outside sidewalk.
   Over 6' - Locate device between face of curb and sidewalk.
4. Stop line to be perpendicular to edge of roadway, approx. 15' from nearest rail; or 8' from and parallel to gate when present.

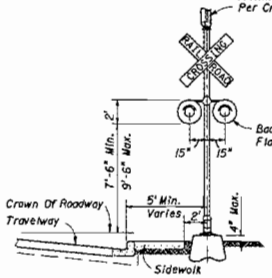

TYPE I

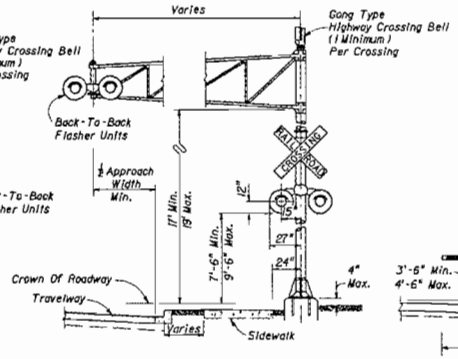

TYPE II

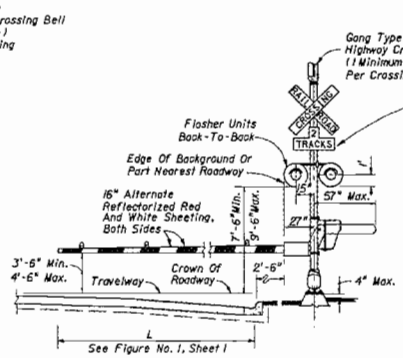

TYPE III

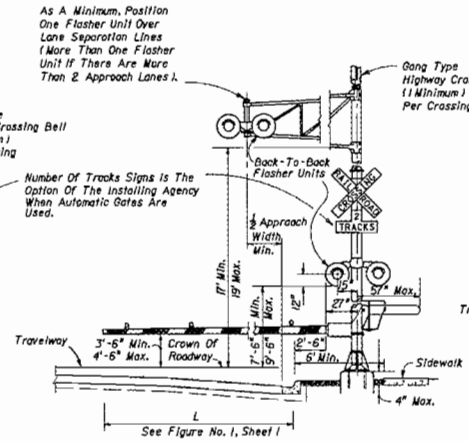

TYPE IV

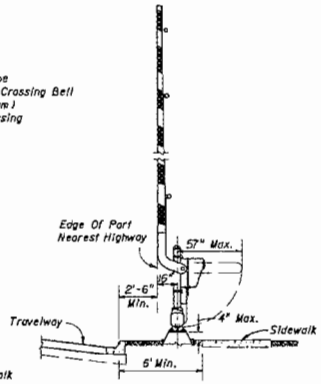

TYPE V

STATE OF FLORIDA DEPARTMENT OF TRANSPORTATION	2006 FDOT Design Standards	Last Revision 00	Sheet No. 2 of 4
	RAILROAD GRADE CROSSING TRAFFIC CONTROL DEVICES	Index No. 17882	

RAILROAD CROSSING AT TWO (2)-LANE ROADWAY

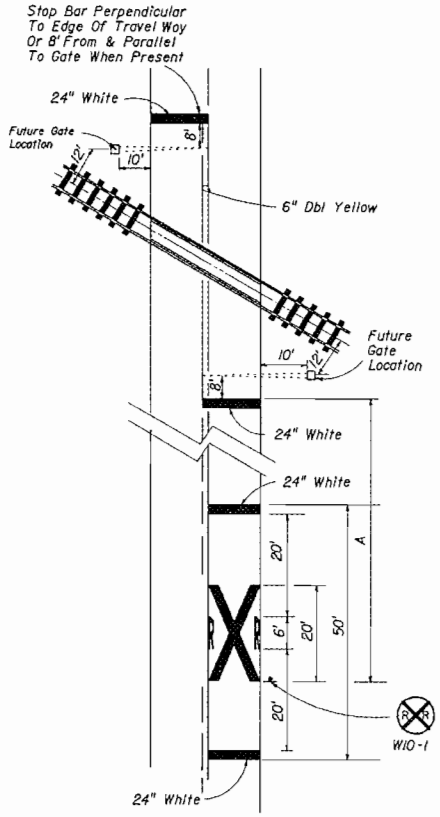

RAILROAD CROSSING AT MULTI-LANE ROADWAY

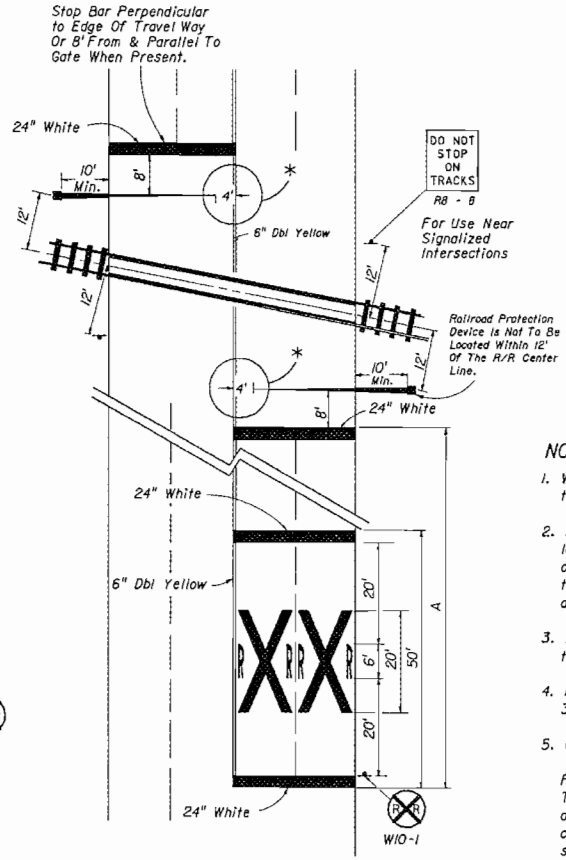

RELATIVE LOCATION OF CROSSING TRAFFIC CONTROL DEVICES

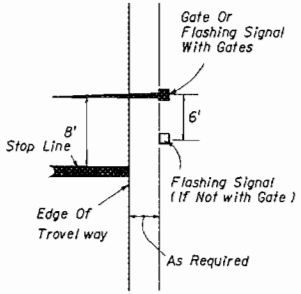

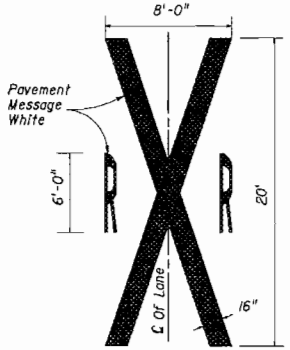

SPEED MPH	" A " IN FT
60	400
55	325
50	290
45	175
40	125
35	100
30	75
URBAN	50 MIN.

NOTES:

1. When computing pavement message, quantities do not include traverse lines.
2. Placement of sign W10-1 in a residential or business district, where low speeds are prevalent, the W10-1 sign may be placed a minimum distance of 100' from the crossing. Where street intersections occur between the R/R pavement message and the tracks an additional W10-1 sign and additional pavement message should be used.
3. A portion of the pavement markings symbol should be directly opposite the W10-1 sign.
4. Recommended location for FTP-61-04 or FTP-62-04 signs, 100' urban and 300' rural. See index 17355 for sign details.
5. Gate Length Requirements:

   For two-way undivided sections:
   The gate should extend to within 1' of the center line. On multiple approaches the maximum gate length may not reach to within 1' of the center line. For those cases, the distance from the gate to the center line shall be a maximum of 4'.

   For one-way or divided sections:
   the gate shall be of sufficient length such that the distance from the gate tip to the inside edge of pavement is a maximum of 4'.

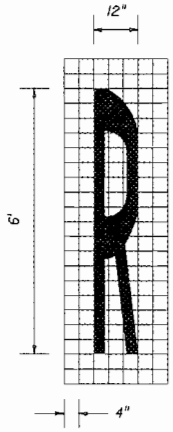

STATE OF FLORIDA DEPARTMENT OF TRANSPORTATION	2006 FDOT Design Standards	Last Revision 07/01/05	Sheet No. 3 of 4
	RAILROAD GRADE CROSSING TRAFFIC CONTROL DEVICES	Index No. 17882	

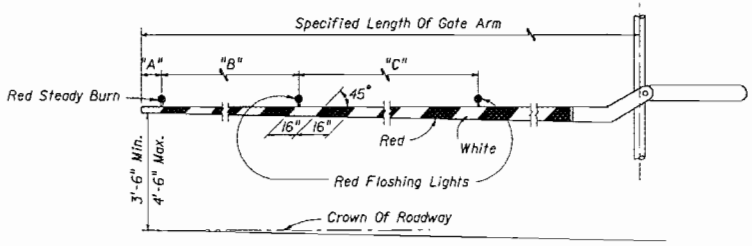

RAILROAD GATE ARM LIGHT SPACING

Specified Length Of Gate Arm	Dimension "A"	Dimension "B"	Dimension "C"
14 Ft.	6"	36"	5'
15 Ft.	18"	36"	5'
16-17 Ft.	24"	36"	5'
18-19 Ft.	28"	41"	5'
20-23 Ft.	28"	4'	5'
24-28 Ft.	28"	5'	5'
29-31 Ft.	36"	6'	6'
32-34 Ft.	36"	7'	7'
35-37 Ft.	36"	9'	9'
38 And Over	36"	10'	10'

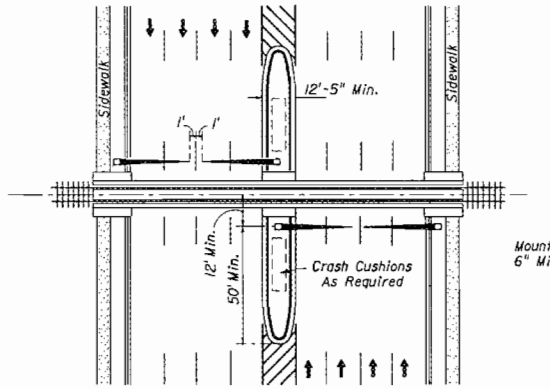

PLAN

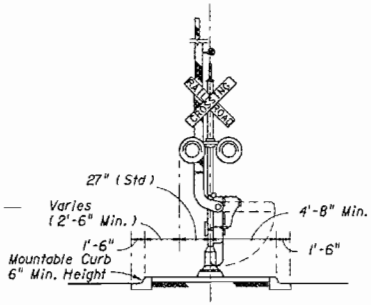

MEDIAN SECTION AT SIGNAL GATES

NOTE:
For additional information see the "Manual On Uniform Traffic Control Devices", Part VIII; The "Traffic Control Handbook", Part VIII; and AASHTO "A Policy On Geometric Design Of Streets And Highways".

MEDIAN SIGNAL GATES FOR MULTI LANE UNDIVIDED URBAN SECTIONS

(THREE OR MORE DRIVING LANES IN ONE DIRECTION, 45 mph OR LESS)