Memorandum

MIAMI-DADE COUNTY

Date: May 5, 2009

Agenda Item No. 8(P)(1)(I)

To: Honorable Chairman Dennis C. Moss
and Members, Board of County Commissioners

From: George M. Burgess
County Manager

Subject: Resolution Authorizing the Execution of a Four-Party Agreement Among Miami-Dade County, City of Hallandale, the State of Florida Department of Transportation and Florida East Coast Railway, LLC for the Installation of Crossing Protective Devices at NE 215 Street, in the Vicinity of NE 26 Avenue/SW 11 Street

---

Recommendation

It is recommended that the Board of County Commissioners (BCC) approve the attached resolution authorizing the execution of a Four-Party Agreement among Miami-Dade County (County), City of Hallandale (City), the State of Florida Department of Transportation (FDOT) and Florida East Coast Railway, LLC (FEC) for the installation and maintenance of railroad crossing protective devices at NE 215 Street, in the vicinity of NE 26 Avenue/SW 11 Street.

Scope

The Four-Party Agreement is specifically for one crossing and is within Commission District 4.

Fiscal Impact/Funding Source

The fiscal impact is the yearly maintenance fee for the crossing protective devices in the amount of $987.50. The funding source to be used is Secondary Gas Tax. Miami-Dade County is not responsible for any of the installation costs.

Track Record/Monitor

The entity is Florida East Coast Railway, LLC, which has performed at a satisfactory level and Miami-Dade County Public Works Department's Project Manager, Mr. Modesto Nuñez, will monitor this project.

Background

The yearly diagnostic review for safety recommended the need for installation of crossing protective devices at the aforementioned railroad crossing. NE 215 Street is centered along the County line between Broward and Miami-Dade thus; the City of Hallandale is a party to the agreement. The maintenance cost will be divided 25% City, 25% County and 50% FEC.

Assistant County Manager

MEMORANDUM

(Revised)

TO: Honorable Chairman Dennis C. Moss and Members, Board of County Commissioners

DATE: May 5, 2009

FROM: R. A. Cuevas, Jr. County Attorney

SUBJECT: Agenda Item No. 8(P)(1)(I)

Please note any items checked.

_____ **"4-Day Rule" ("3-Day Rule" for committees) applicable if raised**

_____ **6 weeks required between first reading and public hearing**

_____ **4 weeks notification to municipal officials required prior to public hearing**

_____ **Decreases revenues or increases expenditures without balancing budget**

_____ **Budget required**

_____ **Statement of fiscal impact required**

_____ **Bid waiver requiring County Mayor's written recommendation**

_____ **Ordinance creating a new board requires detailed County Manager's report for public hearing**

_____ **Housekeeping item (no policy decision required)**

_____ **No committee review**

Approved _____ Mayor
Veto _____
Override _____

Agenda Item No. 8(P)(1)(I)
5-5-09

RESOLUTION NO. _____

RESOLUTION AUTHORIZING THE EXECUTION OF A FOUR-PARTY AGREEMENT AMONG MIAMI-DADE COUNTY, CITY OF HALLANDALE, THE STATE OF FLORIDA DEPARTMENT OF TRANSPORTATION AND FLORIDA EAST COAST RAILWAY, LLC FOR THE INSTALLATION OF CROSSING PROTECTIVE DEVICES AT NE 215 STREET, IN THE VICINITY OF NE 26 AVENUE/SW 11 STREET AND YEARLY MAINTENANCE BY THE COUNTY IN THE SUM OF $987.50

WHEREAS, this Board desires to accomplish the purposes outlined in the accompanying memorandum, a copy of which is incorporated herein by reference,

NOW, THEREFORE, BE IT RESOLVED BY THE BOARD OF COUNTY COMMISSIONERS OF MIAMI-DADE COUNTY, FLORIDA, that this Board approves a Four-Party Agreement among Miami-Dade County, City of Hallandale, the State of Florida Department of Transportation and Florida East Coast Railway, LLC for the installation of railroad crossing protective devices at NE 215 Street, in the vicinity of NE 26 Avenue/SW 11 Street, in substantially the form attached hereto and made a part hereof; and authorizes the County Mayor or County Mayor's designee to execute same on behalf of Miami-Dade County.

The foregoing resolution was offered by Commissioner , who moved its adoption. The motion was seconded by Commissioner and upon being put to a vote, the vote was as follows:

Dennis C. Moss, Chairman
Jose "Pepe" Diaz, Vice-Chairman

Bruno A. Barreiro	Audrey M. Edmonson
Carlos A. Gimenez	Sally A. Heyman
Barbara J. Jordan	Joe A. Martinez
Dorrin D. Rolle	Natacha Seijas
Katy Sorenson	Rebeca Sosa
Sen. Javier D. Souto	

The Chairperson thereupon declared the resolution duly passed and adopted this 5th day of May, 2009. This resolution shall become effective ten (10) days after the date of its adoption unless vetoed by the Mayor, and if vetoed, shall become effective only upon an override by this Board.

MIAMI-DADE COUNTY, FLORIDA
BY ITS BOARD OF
COUNTY COMMISSIONERS

HARVEY RUVIN, CLERK

By:_____
Deputy Clerk

Approved by County Attorney as
to form and legal sufficiency.

Thomas Goldstein

STATE OF FLORIDA DEPARTMENT OF TRANSPORTATION

RAILROAD REIMBURSEMENT AGREEMENT
GRADE CROSSING TRAFFIC CONTROL DEVICES

FINANCIAL PROJECT NO.	ROAD NAME OR NUMBER	COUNTY NAME	PARCEL & R/W NUMBER	FAP NUMBER
422477-3-57-01	NE 215 ST/SW 11 ST	MIAMI-DADE/BROWARD		00S6-45J

THIS AGREEMENT, made and entered into this _____ day of _____, _____, by and between the STATE OF FLORIDA DEPARTMENT OF TRANSPORTATION, hereinafter called the DEPARTMENT, and FLORIDA EAST COAST RAILWAY COMPANY, LLC., a corporation organized and existing under the laws of Florida, with its principal place of business in the City of Jacksonville, County of Duval, State of Florida, hereinafter called the COMPANY; and MIAMI-DADE County, a political subdivision of the State of Florida, acting by and through its Board of County Commissioners, hereinafter called the COUNTY; and the CITY OF HALLANDALE, a municipal corporation, hereinafter called the CITY.

WITNESSETH:

WHEREAS, the DEPARTMENT is constructing, reconstructing or otherwise changing a portion of the Public Road System, designated by the Financial Project ID 422477-3-57-01, on NE 215 Street/SW 11 Street, which crosses at grade the right of way and tracks of the COMPANY'S Milepost ~~251~~ 351+1686, FDOT/AAR Crossing Number 272595H, at or near NE 215 ST/SW 11 ST, as shown on the DEPARTMENT'S Plan Sheet No. Standard Index 17882.

NOW, THEREFORE, in consideration of the mutual undertakings as herein set forth, the parties hereto agree as follows:

1. The COMPANY shall furnish the necessary materials and install Automatic Grade Crossing Signals Type III Class IV and/or other traffic control devices at said location on an actual cost basis and in accordance with (1) the attached detailed statement of the work, plans, and specifications; and (2) the DEPARTMENT'S Plans and Standard Index Number 17882 attached hereto and made a part hereof.

2. After installation of said signals is completed, twenty five (25%) percent of the expense thereof in maintaining the same shall be borne by the COUNTY, twenty five (25%) percent shall be borne by the CITY, and fifty (50%) percent shall be borne by the COMPANY, as enumerated by the Schedule of Annual Cost of Automatic Highway Grade Crossing Devices attached hereto and by this reference made a part hereof and subject to future revision.

RECEIVED
JAN 26 2009
F.E.C. Railway, L.L.C.
Engineering Services

3. After said signals have been installed and found to be in satisfactory working order by the parties hereto, the same shall be immediately put into service, operated and maintained by the COMPANY so long as said COMPANY or its successors or assigns shall operate the said signals at said grade crossing; or until it is agreed between the parties hereto that the signals are no longer necessary or until the said crossing is abandoned; or legal requirements occur which shall cease operation of signals thereat.

The COMPANY agrees that any future relocation or adjustment of said signals shall be performed by the COMPANY, but at the expense of the party initiating such relocation. Upon relocation the maintenance responsibilities shall be in accordance with the provisions of this agreement. It is further agreed that the cost of maintaining any additional or replacement signal equipment at the same location will be shared as provided under Paragraph 2. above.

4. Unless otherwise agreed upon herein, the COUNTY and the CITY agree to insure that at the crossing the advance warning signs and railroad crossing pavement markings will conform to the U.S. Department of Transportation Manual on Uniform Traffic Control Devices within 30 days of notification that the railroad signal improvements have been completed and that such signs and pavement markings will be continually maintained at an acceptable level.

5. The COMPANY hereby agrees to install and/or adjust the necessary parts of its facilities along said road in accordance with the provisions set forth in the:

(a) DEPARTMENT Procedure No. 725-080-002 Appendix D.4, and Rule 14.57.011 "Public Railroad-Highway Grade Crossing Costs", Florida Administrative Code.

(b) Federal Highway Administration Federal-Aid Policy Guide, 23 C.F.R. Subchapter G, Part 646, Subpart B, and 23 C.F.R., Subchapter B, Part 140, Subpart I,

and any supplements thereto or revisions thereof, which, by reference hereto, are made a part hereof. The COMPANY further agrees to do all of such work, with its own forces or by a contractor paid under a contract let by the COMPANY, all under the supervision and approval of the DEPARTMENT and the Federal Highway Administration, when applicable.

6. The DEPARTMENT hereby agrees to reimburse the COMPANY for all costs incurred by it in the installation and/or adjustment of said facilities, in accordance with the provisions of Procedure No. 725-080-002 Appendix D-4 "Billing Requirements," and any supplements thereto or revisions thereof. It is

understood and agreed by and between the parties hereto that preliminary engineering costs not incorporated within this agreement shall not be subject to payment by the DEPARTMENT.

7. Attached hereto, and by this reference made a part hereof, are plans and specifications of the work to be performed by the COMPANY pursuant to the terms hereof, and an itemized estimate of the cost thereof in the amount of $ 213,150.00. All work performed by the COMPANY pursuant hereto, shall be performed according to these plans and specifications as approved by the DEPARTMENT and the Federal Highway Administration if federal aid participating; and all subsequent plan changes shall likewise be approved by the DEPARTMENT and the Federal Highway Administration, when applicable.

8. All labor, services, materials, and equipment furnished by the COMPANY in carrying out the work to be performed hereunder shall be billed by the COMPANY direct to the DEPARTMENT. Separate records as to the costs of contract bid items and force account items performed for the COMPANY shall also be furnished by the COMPANY to the DEPARTMENT.

9. The COMPANY has determined that the method to be used in developing the relocation or installation cost shall be as specified for the method checked and described hereafter:

(a) Actual and related indirect costs accumulated in accordance with a work order accounting procedure prescribed by the applicable Federal or State regulatory body.

(b) Actual and related indirect costs accumulated in accordance with an established accounting procedure developed by the COMPANY and approved by the DEPARTMENT.

(c) An agreed lump sum $ 0, as supported by a detail analysis of estimated cost attached hereto. (NOTE: This method is not applicable where the estimated cost of the proposed adjustment exceeds $100,000.)

10. The installation and/or adjustment of the COMPANY'S facility as planned will not involve additional work over and above the minimum reimbursable requirements of the DEPARTMENT. (If upgrading and/or nonreimbursable work is involved at the option of the COMPANY, then credit against the cost of the project is required and will be governed by the method checked and described hereafter):

(a) ___ % will be applied to the final billing of work actually accomplished to determine required credit for (betterment) and/or (expired service life) and/or (nonreimbursable segments).

(b) All work involving nonreimbursable segments will be performed by special COMPANY work or job order number apart and separate from the reimbursable portion of the work; such work or job order number to be_____ . The COMPANY further agrees to clearly identify such additional work areas in the COMPANY'S plans and estimates for the total work covered by this Agreement.

(c) $ _____credited for __betterment ___expired service life ___nonreimbursable segments in accord with Article 9.(c) hereinabove.

11. It is specifically agreed by and between the DEPARTMENT and the COMPANY that the DEPARTMENT shall receive fair and adequate credit for any salvage which shall accrue to the COMPANY as a result of the above installation and/or adjustment work.

12. It is further agreed that the cost of all improvements made during this adjustment work shall be borne by the COMPANY, subject only to the DEPARTMENT bearing such portion of this cost as represents the cost of adjustment of previously existing facility, less salvage credit as set forth in the immediately preceding paragraph.

13. Upon completion of the work the COMPANY shall, within one hundred eighty (180) days, furnish the DEPARTMENT with two (2) copies of its final and complete billing of all costs incurred in connection with the work performed hereunder, such statement to follow as closely as possible the order of the items contained in the estimate attached hereto. The totals for labor, overhead, travel expense, transportation, equipment, material and supplies, handling costs and other services shall be shown in such a manner as will permit ready comparison with the approved plans and estimates. Materials shall be itemized where they represent major components of cost in the relocation following the pattern set out in the approved estimate as closely as is possible. Salvage credits from recovered and replaced permanent and recovered temporary materials shall be reported in said bills in relative position with the charge for the replacement or the original charge for temporary use.

The final billing shall show the description and site of the Project; the date on which the first work was performed, or, if preliminary engineering or right-of-way items are involved, the date on which the earliest item of billed expense was incurred; the date on which the last work was performed or the last item of billed expense was incurred; and the location where the records and accounts billed can be audited. Adequate reference shall be made in the billing to the COMPANY'S records, accounts and other relevant documents. All cost records and accounts shall be subject to audit by a representative of the DEPARTMENT. Upon receipt of invoices, prepared in accordance with the provisions of the above indicated Reimbursement Policy, the DEPARTMENT agrees to reimburse the COMPANY in the amount of such actual costs as approved by the DEPARTMENT'S auditor.

14. Payment shall be made only after receipt and approval of goods and services unless advance payments are authorized by the DEPARTMENT's Comptroller under Section 334.044(29), F.S., or by the Department of Financial Services under Section 215.422(14), Florida Statutes (F.S.)

15. In accordance with Section 287.058, Florida Statutes, the following provisions are in this Agreement:

If this Contract involves units of deliverables, then such units must be received and accepted in writing by the Contract Manager prior to payments. Bills for fees or other compensation for services or expenses shall be submitted in detail sufficient for a proper preaudit and postaudit thereof.

16. Bills for travel expenses specifically authorized in this agreement shall be submitted and paid in accordance with DEPARTMENT Rule 14-57.011 "Public Railroad-Highway Grade Crossing Costs" and the Federal Administration Federal-Aid Policy Guide, Subchapter B, Part 140, Subpart I "Reimbursement for Railroad Work."

17. In accordance with Section 215.422, Florida Statutes, the following provisions are in this Agreement:

Contractors providing goods and services to the Department should be aware of the following time frames. Upon receipt, the Department has five (5) working days to inspect and approve the goods and services, unless the Agreement specifies otherwise. The Department has 20 days to deliver a request for payment (voucher) to the Department of Financial Services. The 20 days are measured from the latter of the date the invoice is received or the goods or services are received, inspected and approved.

If a payment is not available within 40 days, a separate interest penalty at a rate as established pursuant to Section 215.422(3)(b), Florida Statutes, will be due and payable, in addition to the invoice amount, to the Contractor. Interest penalties of less than one (1) dollar will not be enforced unless the Contractor requests payment. Invoices which have to be returned to a Contractor because of Contractor preparation errors will result in a delay in the payment. The invoice payment requirements do not start until a properly completed invoice is provided to the Department.

A Vendor Ombudsman has been established within the Department of Financial Services. The duties of this individual include acting as an advocate for contractors/vendors who may be experiencing problems in obtaining timely payment(s) from a state agency. The Vendor Ombudsman may be contacted at (850) 410-9724 or by calling the Department of Financial Services Hotline, 1-800-848-3792.

18. Records of costs incurred under terms of this Agreement shall be maintained and made available upon request to the Department at all times during the period of this Agreement and for five years after final payment is made. Copies of these documents and records shall be furnished to the Department upon request. Records of costs incurred includes the Contractor's general accounting records and the project records, together with supporting documents and records, of the Contractor and all subcontractors performing work on the project, and all other records of the Contractor and subcontractors considered necessary by the Department for a proper audit of costs.

19. In the event this contract is for services in excess of TWENTY FIVE THOUSAND DOLLARS ($25,000.00) and a term for a period of more than one year, the provisions of Section 339.135(6)(a), Florida Statutes, are hereby incorporated:

> The Department, during any fiscal year, shall not expend money, incur any liability, or enter into any contract which, by its terms, involves the expenditure of money in excess of the amounts budgeted as available for expenditure during such fiscal year. Any contract, verbal or written, made in violation of this subsection is null and void, and no money may be paid on such contract. The Department shall require a statement from the Comptroller of the Department that such funds are available prior to entering into any such contract or other binding commitment of funds. Nothing herein contained shall prevent the making of contracts for periods exceeding one year, but any contract so made shall be executory only for the value of the services to be rendered or agreed to be paid for in succeeding fiscal years; and this paragraph shall be incorporated verbatim in all contracts of the Department which are for an amount in excess of TWENTY FIVE THOUSAND DOLLARS ($25,000.00) and which have a term for a period of more than one year.

20. In accordance with Section 287.133 (2)(a), Florida Statutes, the following provisions are included in this Agreement:

> A person or affiliate who has been placed on the convicted vendor list following a conviction for a public entity crime may not submit a bid on a contract to provide any goods or services to a public entity, may not submit a bid on a contract with a public entity for the construction or repair of a public building or public work, may not submit bids on leases of real property to a public entity, may not be awarded or perform work as a contractor, supplier, subcontractor, or consultant under a contract with any public entity, and may not transact business with any public entity in excess of the threshold amount provided in s.287.017 for CATEGORY TWO for a period of 36 months from the date of being placed on the convicted vendor list.

21. In accordance with Section 287.0582, Florida Statutes, the following provision is included in this Agreement:

> The Department's obligation to pay under this contract is contingent upon an annual appropriation by the Florida Legislature.

22. ~~The COMPANY covenants and agrees that it will indemnify and hold harmless the DEPARTMENT and all of the DEPARTMENT'S officers, agents, and employees from any claim, loss, damage, cost charge, or expense arising out of any act, action, neglect, omission or delay by the COMPANY during the performance of the contract, whether direct or indirect, and whether to any person or property to which the DEPARTMENT or said parties may be subject, except that neither the~~

~~COMPANY nor any of its sub-contractors will be liable under this section for damages arising out of injury or damage to persons or property directly caused or resulting from the sole negligence of the DEPARTMENT or any of its officers, agents, or employees.~~

23. Paragraph 22 stricken prior to execution by the Company and the Department.

IN WITNESS WHEREOF, the parties hereto have caused these presents to be executed by their duly authorized officers, the day and year first above written.

STATE OF FLORIDA

DEPARTMENT OF TRANSPORTATION

BY:_____

(TITLE: _____)

FLORIDA EASTCOAST RAILWAY COMPANY

BY: _____
A.G. Fowler Jr.
General Manager
Signals & Communications

(TITLE: _____)

MIAMI DADE COUNTY, FLORIDA

BY:_____

(TITLE:_____)

CITY OF HALLANDALE, FLORIDA

BY:_____

(TITLE: CITY MANAGER
D. MIKE GOOD)

Approved as to Form and Sufficiency
City Attorney

Legal Review	Approved as to Funds Available	Approved as to FAPG Requirements
BY:	BY:	BY:
_____	_____	_____
Attorney - DOT Date	Comptroller - DOT Date	FHWA Date

STATE OF FLORIDA DEPARTMENT OF TRANSPORTATION

725-090-55
RAIL
10/98

CITY RESOLUTION
GRADE CROSSING TRAFFIC CONTROL DEVICES AND FUTURE RESPONSIBILITY

FINANCIAL PROJECT NO.	ROAD NAME OR NUMBER	COUNTY NAME	PARCEL & R/W NUMBER	FAP NUMBER
42247735701	NE 215 ST/SW 11 ST	MIAMI-DADE/ BROWARD		00S6-45J

A RESOLUTION AUTHORIZING EXECUTION OF A RAILROAD REIMBURSEMENT AGREEMENT FOR THE INSTALLATION OF GRADE CROSSING TRAFFIC CONTROL DEVICES, AND FUTURE MAINTENANCE AND ADJUSTMENT OF SAID DEVICES; PROVIDING FOR THE EXPENDITURE OF FUNDS; AND PROVIDING WHEN THIS RESOLUTION SHALL TAKE EFFECT.

RESOLUTION NO. _____

ON MOTION OF Commissioner (Councilman) _____, seconded by Commissioner (Councilman) _____, the following RESOLUTION was adopted:

WHEREAS, the State of Florida Department of Transportation is constructing, reconstructing or otherwise changing a portion of the Public Road System, on NE 215th Street / SW 11th Street, which shall call for the installation and maintenance of railroad grade crossing traffic control devices for railroad grade crossing over or near said highway; and

NOW, THEREFORE, BE IT RESOLVED BY THE CITY COMMISSION OF THE CITY OF Hallandale Beach, FLORIDA;

That the City of Hallandale Beach enter into a RAILROAD REIMBURSEMENT AGREEMENT with the State of Florida Department of Transportation and the Florida East Coast Railway, LLC Company for the installation and maintenance of certain grade crossing traffic control devices designated as Financial Number 422477-3-57-01 on NE 215th St/SW 11 St. which crosses the right of way and tracks of the Company at FDOT/AAR Crossing No. 272595-H located near Hallandale Beach, Florida; and

That the City assume it's share of the costs for future maintenance and adjustment of said grade crossing traffic control devices as designated in the RAILROAD REIMBURSEMENT AGREEMENT; and

That the Mayor and City Clerk be authorized to enter into such agreements with the State of Florida Department Transportation; and the Florida East Coast Railway, LLC. Company as herein described; and

That this RESOLUTION shall take effect immediately upon adoption.

INTRODUCED AND PASSED by the City Commission of the City of _____, Florida, in regular session this _____ day of _____, _____.

_____
Mayor - Commissioner

ATTEST: _____ (SEAL)
City Auditor and Clerk

STATE OF FLORIDA DEPARTMENT OF TRANSPORTATION

725-090-09
RAIL
05/02

WORK DESCRIPTION
GRADE CROSSING TRAFFIC CONTROL DEVICES

FINANCIAL PROJECT NO.	ROAD NAME OR NUMBER	COUNTY NAME	PARCEL & R/W NUMBER	FAP NUMBER
42247735701	NE 215 ST/SW 11ST	MIAMI-DADE / BROWARD		00S6-45J

RAILROAD COMPANY

Florida East Caost Railway, LLC.

A. JOB DESCRIPTION & LOCATION: FL&G, CWT, generator case & Batteries, new cabinet...

B. TYPE OF ROADWAY FACILITY: _____

C. FDOT/AAR XING NO.: 272595-H RR MILE POST TIE: 251+1686'

D. TYPE CROSSING PROPOSED: III CLASS: IV DOT INDEX NO.: 178826

E. STATUS AND PROPOSAL:

1. EXISTING DEVICES: (See Agreement dated _____)
   - a. ____ None-New Crossing.
   - b. ____ Crossbuck and Disk.
   - c. ____ Flashing Signals with Disk.
   - d. ____ Flashing Signals with Cantilever.
   - e. X Flashing Signals with Gates.
   - f. ____ Flashing Signals with Cantilever and Gates.

2. PROPOSED DEVICES: (Safety Index Rating 63.23)
   - a. ____ No revision required.
   - b. ____ Crossbuck and Disk.
   - c. ____ Flashing Signals and Disk.
   - d. ____ Flashing Signals with Cantilever.
   - e. X Flashing Signals with Gates.
   - f. ____ Flashing Signals with Cantilever and Gates.
   - g. ____ Relocate existing signal devices:
     - (1) ____ (With-Without) addition of Gates.
     - (2) ____ (With-Without) synchronization with highway traffic signals.
     - (3) ____ (With-Without) constant warning time.

F. COMMUNICATION AND/OR POWER LINE ADJUSTMENTS

1. N/A By Others (_____ Company.)
2. N/A By Railroad Company.

G. AUTHORITY REQUESTED: (Draft attached: ○ Yes ◉ No.)

1. X Agreement (Third Party Participating City of Hallandale Beach & Miami-Dade County)
2. ____ Supplemental Agreement No. _____
3. ____ Crossing Permit.
4. ____ Estimate for Change Order No. _____
5. ____ Letter of Authority.
6. ____ Letter of Confirmation (No Cost to Department).

H. OTHER REMARKS:

Negotiations to be completed by:
Signal installation target date: _____
Synchronization: (Draft attached ○ Yes ○ No.)

STATE OF FLORIDA DEPARTMENT OF TRANSPORTATION

RAILROAD GRADE CROSSING TRAFFIC CONTROL DEVICES

725-090-41
RAIL
OGC - 01/06

FINANCIAL PROJECT NO.	ROAD NAME OR NUMBER	COUNTY NAME	PARCEL & R/W NUMBER	FAP NUMBER
42247735701	NE 215th Street	MIAMI-DADE/ BROWARD	1(SIG-B)	00S6-045J

COMPANY NAME: FLORIDA EAST COAST RAILWAY COMPANY, L.L.C.

A. FDOT/AAR XING NO.: 272595H RR MILE POST TIE: 251+1686

B. TYPE SIGNALS PROPOSED III CLASS IV DOT INDEX: 17882

SCHEDULE OF ANNUAL COST OF AUTOMATIC HIGHWAY GRADE CROSSING TRAFFIC CONTROL DEVICES

Annual Maintenance Cost Exclusive of Installation

CLASS	DESCRIPTION	COST*
I	Flashing Signals - One Track	$2,086.00
II	Flashing Signals - Multiple Tracks	$2,760.00
III	Flashing Signals and Gates - One Track	$3,146.00
IV	Flashing Signals and Gates - Multiple Tracks	$3,950.00

AUTHORITY: FLORIDA ADMINISTRATIVE RULE 14-57.011
Public Railroad-Highway Grade Crossing Costs

EFFECTIVE DATE: July 22, 1982

GENERAL AUTHORITY: 334.044, F.S.

SPECIFIC LAW IMPLEMENTED: 335.141, F.S.

*This schedule will become effective July 1, 2006 and will be reviewed every 5 years and revised as appropriate based on the Consumer Price Index for all Urban Consumers published by the U.S. Department of Labor.

FLORIDA DEPARTMENT OF TRANSPORTATION
DIAGNOSTIC FIELD REVIEW SHEET
RAIL-HIGHWAY GRADE CROSSING
DATA SHEET

PROJECT NO. _____ F.M. NO. _____

CROSSING NO.: 272595H PRIORITY NO.: ~~493~~ 448 COUNTY: MIAMI-DADE CITY: MIAMI RDWY: NE 215th ST

CLASSIFICATION/LOCATION: DATE LAST UPDATED: 10/31/2002

R. R. CO.: FEC R. R. BRANCH: STATION: MIAMI R. R. MILEPOST: 351.32

R. R. CROSSING STATUS: OPEN--TRACK ACT AS OF 12/16/2002 LATITUDE: 25.97 LONGITUDE: 80.15

RAIL OPERATIONS: DATE LAST UPDATED: 07/20/1986

TRAIN MOVEMENTS: 30 MAXIMUM TRAIN SPEED: 55 EFFECTIVE: 07/20/1986 NO. OF MAIN TRACKS: 2 OTHER TRACKS: 0

WARNING DEVICES: DATE LAST UPDATED:

EXISTING WARNING: FL&G TYPE OF TRAIN DETECTION: MOTION DETECTORS PREEMPTION: yes ADVANCE WARNING: Y

PHYSICAL DATA: DATE LAST UPDATED: 10/31/2002

R. R. CROSSING ANGLE: 60-90 DEG NO. OF THRU LANES: 3 OTHER LANES: 0 HIGHWAY SPEED: 30

CROSSING CONDITION: EXCELLENT APPROACH CONDITION: NONE MAINTAINING AGENCY: COUNTY

DEPARTMENT DATA: DATE LAST UPDATED: 12/16/2002

TRAFFIC VOL. (ADT): 6,145 AS OF 2003 SCHOOL BUS COUNT: 6 AS OF 2000 PERCENT TRUCKS: 0.00

SAFETY DATA: DATE LAST UPDATED: 05/01/2006

PRED. ACCID./YEAR: 0.04 SAFETY INDEX: 63.23 SAFETY INDEX UPDATE: 05/01/2006 RECOMMENDED WARNING DEVICE: CFL&G&P

DESCRIPTION OF SITE / INSTALLATION CONFLICTS: Broward Co. handles traffic lights for City. Existing signal were included in Gate mechanism Program. Old cables would not meet voltage requirements for additional lights. Existing signal in N.E. quadrant is 6' from travelway. Signal in S.W. quadrant is 7' from travelway. No pavement markings for East approach. No W10-2 signs for parallel rdwys. PM10-1 existing in cabinet.

REVIEW TEAM RECOMMENDATION: Relocate existing signals with new foundations to proper setbacks and add side lights for W. Dixie Hwy. & E. Dixie Hwy. Remove tree in S.W. quadrant. Add new cabinet, cable, CWT, recorder and generator cage. Need W10-2 signs & pavement markings. Right arrow preempted light for southbound traffic needs to be adjusted. New power pole will be required.

DATE REVIEWED 7-19-06 BY _____

REVIEW TEAM PERSONNEL: _____

16

FLORIDA EAST COAST RAILWAY
OFFICE OF THE GENERAL MANAGER
OF SIGNALS AND COMMUNICATIONS

DATE: 08/02/06
FILE: 10.2
TYPE: III
CLASS: IV
NO. OF DAYS: 12
AAR / DOT #: 272595H
MILE POST: 251+1686'
Project Type: FDOT

ESTIMATED COST FOR HIGHWAY CROSSING WARNING DEVICES AT N.E. 215th STREET.
This estimate should be considered void after one (1) year.

MATERIAL	UNIT COST	UNITS	TOTAL COST
GATE FOUNDATIONS	$575.00	2 EA.	$1,150.00
ADDITIONAL FLASHING LIGHT ASSEMBLIES	$2,464.00	2 EA.	$4,928.00
6' X 6' WIRED CASE, WITH HXP-3R	$75,860.00	1 EA.	$75,860.00
GENERATOR CASE W/ TRANSFER SWITCH	$2,654.00	1 EA.	$2,654.00
BATTERY BOX	$675.00	1 EA.	$675.00
BATTERIES, SAFT SPL250	$215.00	30 EA.	$6,450.00
MISC. GROUND MATERIAL	$1,861.09	1 PKG.	$1,861.09
CONDUIT & DIRECTIONAL BORE	$45.00	75 FT.	$3,375.00
CABLE	$4,000.00	1 PKG.	$4,000.00
MISCELLANEOUS RELAY EQUIPMENT	$1,120.00	1 PKG.	$1,120.00
POWER SERVICE	$1,800.00	1 EA.	$1,800.00
MONITORING EQUIPMENT	$12,985.00	1 PKG.	$12,985.00
SANITATION & DISPOSAL	$1,500.00	1 PKG.	$1,500.00
FREIGHT & HANDLING			$29,215.00
TAX @ 6.5%			$7,596.00
TOTAL MATERIALS			**$155,169.09**
EXCAVATING EQUIPMENT PER DAY	$181.00	12 DAYS	$2,172.00
EQUIPMENT RENTAL PER DAY	$125.00	12 DAYS	$1,500.00
FOREMAN'S TRUCK PER DAY	$35.00	12 DAYS	$420.00
GANG TRUCK PER DAY	$63.00	12 DAYS	$756.00
SUPERVISORS TRUCK PER DAY	$35.00	12 DAYS	$420.00
EQUIPMENT TOTAL			**$5,268.00**
ENGINEERING	$7,500.00	1	$7,500.00
ENGINEERING TOTAL			**$7,500.00**
CONSTRUCTION SUPERVISION	$312.00	12 DAYS	$3,744.00
LABOR ADDITIVE			$2,085.00
SUPERVISION TOTAL			**$5,829.00**
LABOR PER DAY	$1,188.90		$14,267.00
NUMBER OF DAYS	12		
LABOR ADDITIVE			$8,326.00
TOTAL LABOR			**$22,593.00**
GANG EXPENSES PER DAY	$553.00		
NUMBER OF DAYS	12		
TOTAL GANG EXPENSES			$6,636.00
SUB-TOTAL			**$202,995.09**
CONTINGENCIES 5%			$10,150.00
TOTAL			**$213,150.00**

272595H.xls

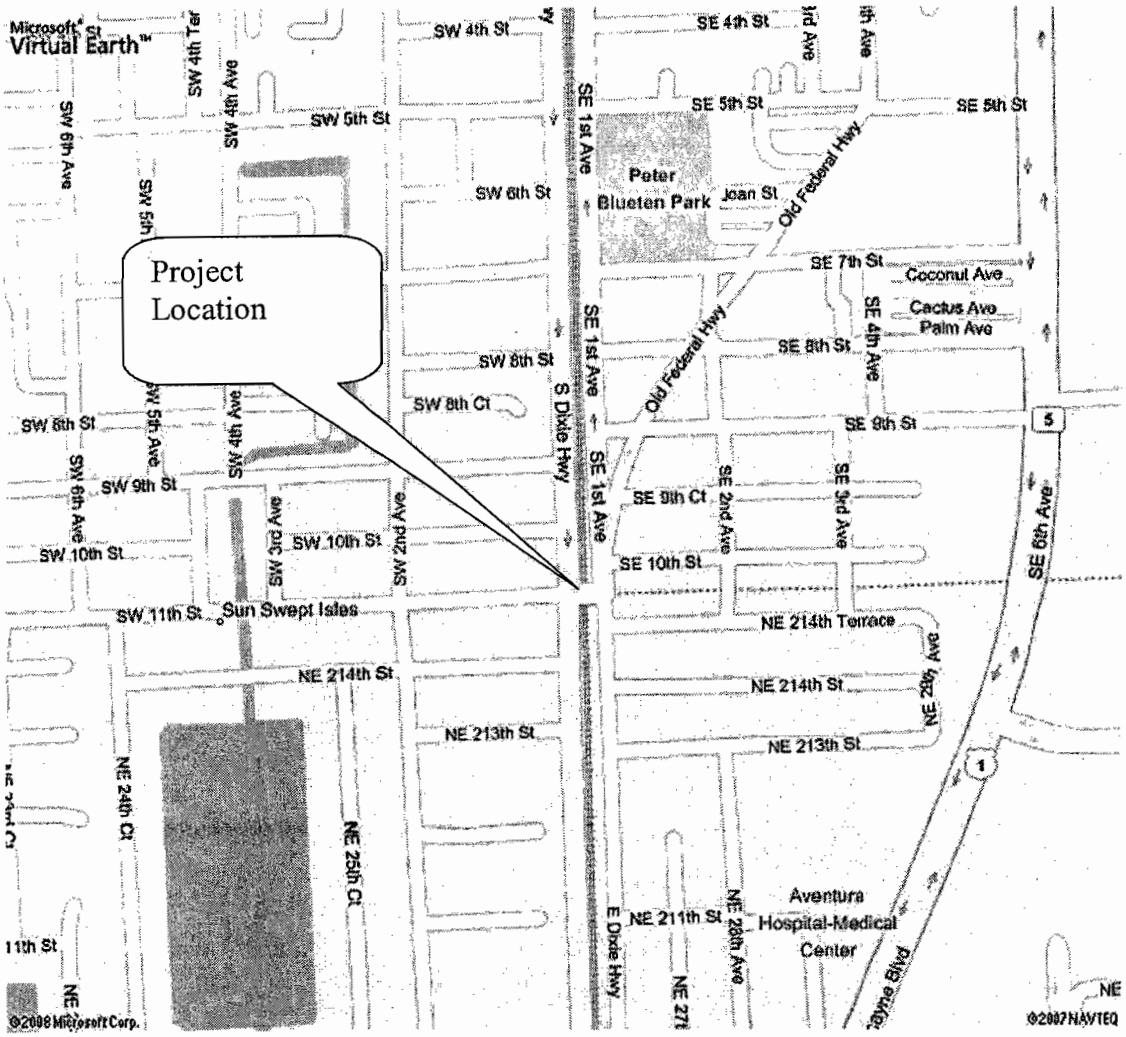

LOCATION MAP

FEC Railway, LLC

LOCATION:	NE 215th Street/SW 11th Street
FINANCIAL PROJECT NO.:	422477-3-57-01
CROSSING NO.:	272595-H
RAILROAD MILEPOST:	251+1686`

STATE OF FLORIDA
DEPARTMENT OF TRANSPORTATION

OFFICE OF MODAL DEVELOPMENT
DISTRICT 4 & 6 RAIL OFFICE

PROJECT SCOPE AND COST ESTIMATE

PROJECT INFORMATION

Financial Project No.:	422477-3-57-01
FAP No.:	00S6-045-J
Location:	NE 215 Street/SW 11 Street
County:	Miami-Dade & Broward
Crossing No.:	272595-H
RR MP:	251+1686'
Company:	Florida East Coast Railway, L.L.C.

This project scope and cost estimate was prepared by:
District Rail Coordinator

PROJECT SCOPE AND COST ESTIMATE

FL&G, CWT & new generator case & batteries, new cabinet,
re-cable crossing, new power service
..... $213,150.00

TOTAL ESTIMATED COSTS..... $213,150.00

ENVIRONMENTAL CERTIFICATION FOR FEDERALLY FUNDED PROJECTS

FEDERAL AID PROGRAM NUMBER: 00S6-045-J

PROJECT DESCRIPTION: Railroad signal safety improvements at several crossings in Miami-Dade County.

FINANCIAL MANAGEMENT NUMBERS: 422477-1, 422477-2, 422477-3, 422477-4, 422477-5, & 422477-6

Projects determined to have general Location and Design Acceptance of Concept under 23 C.F.R. 771.113 (b).

____ This project is a Categorical Exclusion Type I under 23 C.F.R. 771.117 (c). It was reevaluated on _____, and the determination remains valid.

_x_ This project is a Programmatic Categorical Exclusion under current FHWA agreement. It was reevaluated on 11/16/07, and the determination remains valid.

Projects requiring Location and Design Acceptance Concept by FHWA:

____ This project is a Categorical Exclusion Type II under 23 C.F.R. 771.117 (a and b) approved by FHWA on _____.

____ This project is a Finding of No Significant Impact (FONSI) under 23 C.F.R. 771.117 approved by FHWA on _____.

____ This project is a Final Negative Declaration approved by FHWA on _____.

____ This project is a Final Environmental Impact Statement (EIS) under 23 C.F.R. 771.125 approved by FHWA on _____.

A reevaluation in accordance with 23 C.F.R. 771.129 was approved by FHWA on _____.

SIGNATURE: _____ DATE: 11/16/07

District Environmental Administrator

For

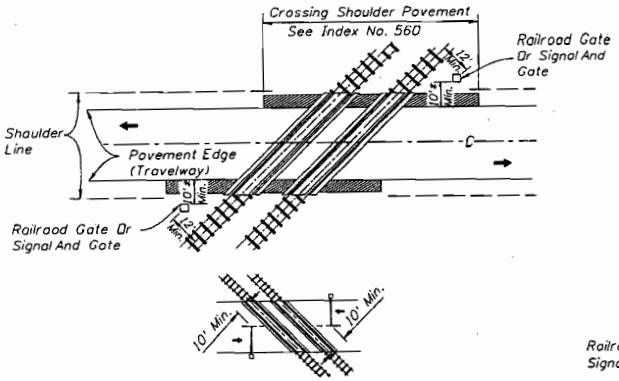

SIGNAL PLACEMENT AT RAILROAD CROSSING
(2 - LANE DESIGN)

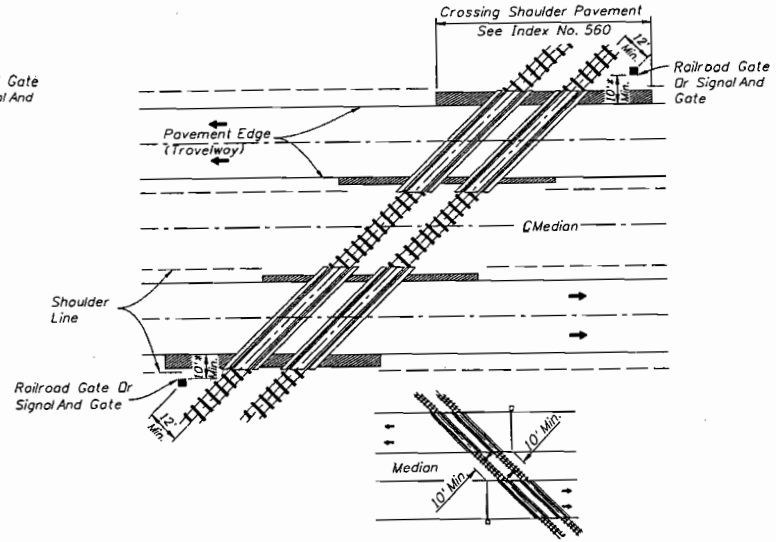

SIGNAL PLACEMENT AT RAILROAD CROSSING
(4 - LANE DESIGN)

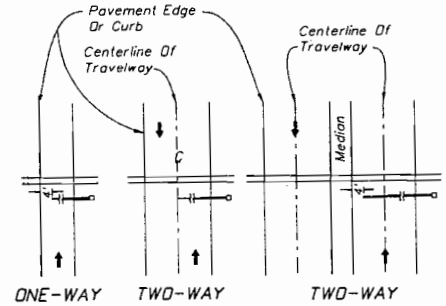

Note :
Arrows denote direction of travel not lane indication

FIGURE 1
Gate Length Requirements
See Note 5 Sheet 3

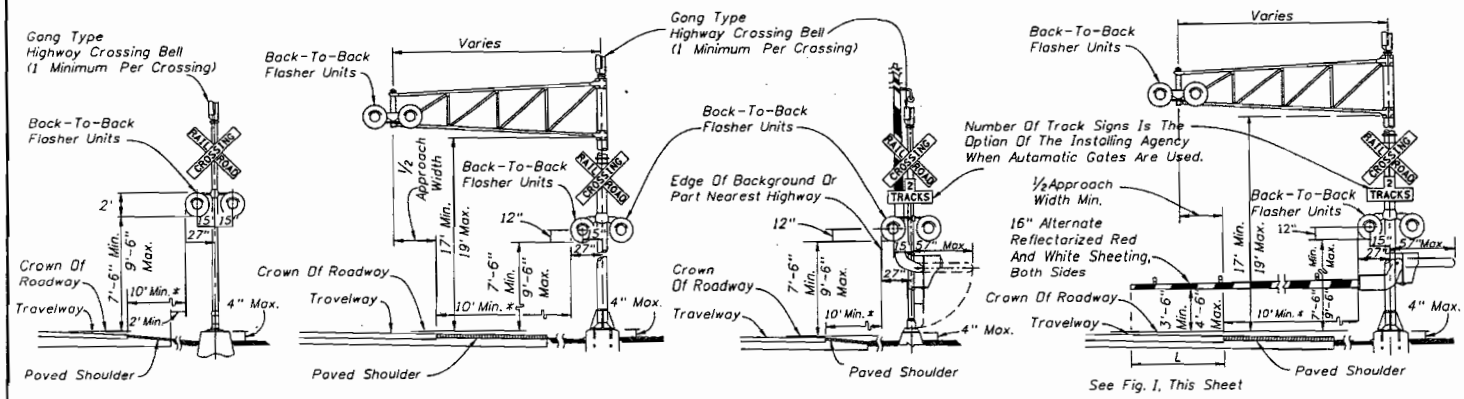

TYPE I

TYPE II

TYPE III

TYPE IV

General Notes

1. No guardrail is proposed for signals; however, some form of impact attenuation device may be specified for certain locations.
2. Advance flasher to be installed when and if called for in plans or specifications.
3. Top of foundation shall be no higher than 4" above finished shoulder grade.
4. Type of traffic control device
   I Flashing signals
   II Flashing signals with cantilever
   III Flashing signals with gate
   IV Flashing signals with cantilever & gate
   V Gate
5. Class of traffic control devices
   I Flashing signals - one track
   II Flashing signals - multiple tracks
   III Flashing signals and gates - one track
   IV Flashing signals and gates - multiple tracks

* When 10' is deemed impracticle the control device can be located as close as 2' from the edge of a paved shoulder but not less than 6' from the edge of the near traffic lane.

Note:
Two separate foundations may be required (one for signals, one for gate), depending on type of equipment used.

STATE OF FLORIDA DEPARTMENT OF TRANSPORTATION	2008 FDOT Design Standards	Last Revision 07/01/05	Sheet No. 1 of 4
	RAILROAD GRADE CROSSING TRAFFIC CONTROL DEVICES	Index No. 17882	

21

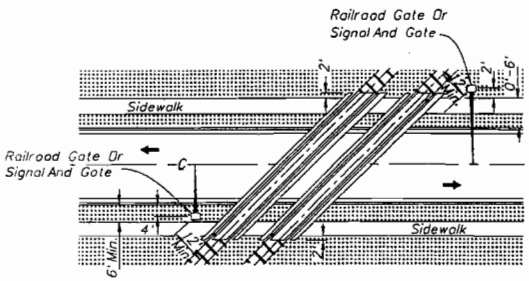

ACUTE ANGLE (AND RIGHT ANGLE)

SIGNAL PLACEMENT AT RAILROAD CROSSING
(2 LANES, CURB & GUTTER)

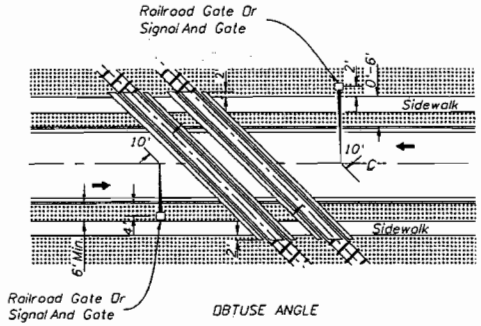

OBTUSE ANGLE

SIGNAL PLACEMENT AT RAILROAD CROSSING
(2 LANES, CURB & GUTTER)

GENERAL NOTES

1. The location of flashing signals and stop lines shall be established based on future (or present) installation of gate with appropriate track clearances.
2. Where plans call for railroad traffic control devices to be installed in curbed medians, the minimum median width shall be 12'-6".
3. Location of railroad traffic control device is based on the distance available between face of curb & sidewalk.
   0' to 6' -Locate device outside sidewalk.
   Over 6' - Locate device between face of curb and sidewalk.
4. Stop line to be perpendicular to edge of roadway, approx. 15' from nearest rail or 8' from and parallel to gate when present.

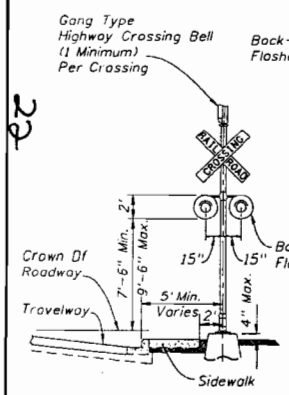

TYPE I

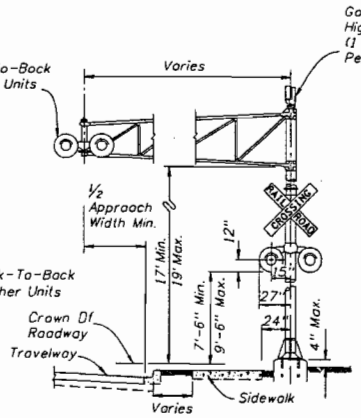

TYPE II

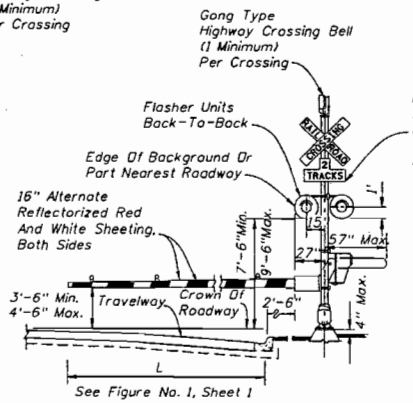

TYPE III

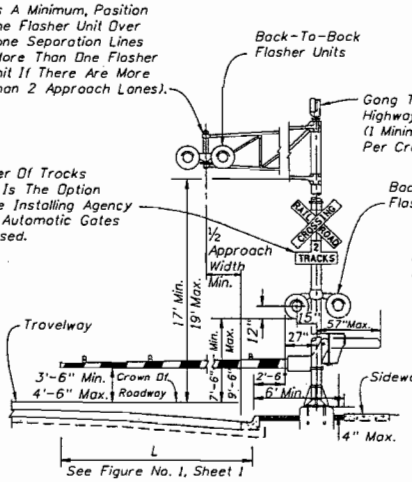

TYPE IV

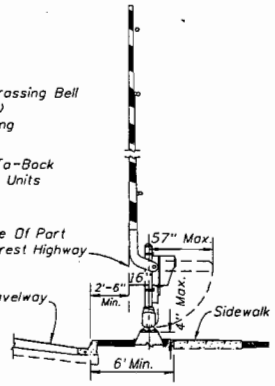

TYPE V

	2008 FDOT Design Standards	Last Revision 07/01/00	Sheet No. 2 of 4
	RAILROAD GRADE CROSSING TRAFFIC CONTROL DEVICES	Index No. 17882	

22

RAILROAD CROSSING AT TWO (2)-LANE ROADWAY

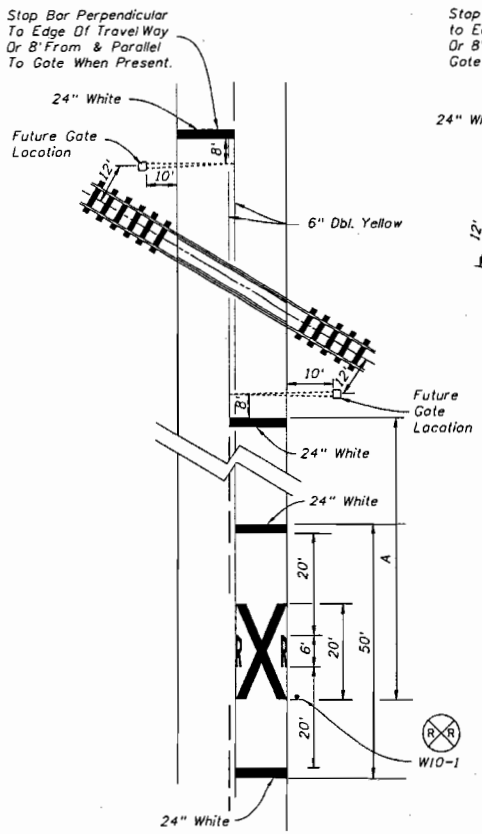

RAILROAD CROSSING AT MULTILANE ROADWAY

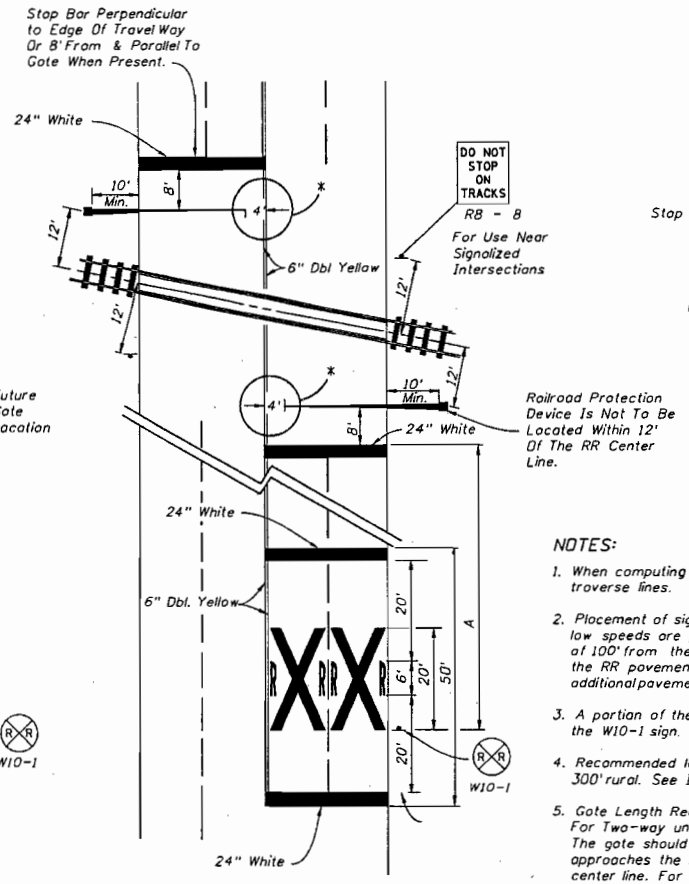

SPEED MPH	" A " IN FT.
60	400
55	325
50	250
45	175
40	125
35	100
URBAN	85 MIN.

RELATIVE LOCATION OF CROSSING TRAFFIC CONTROL DEVICES

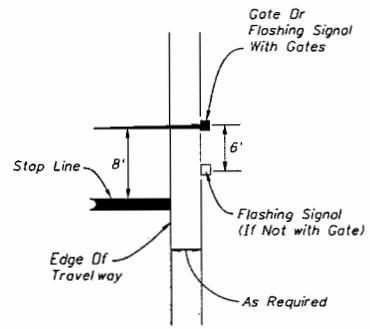

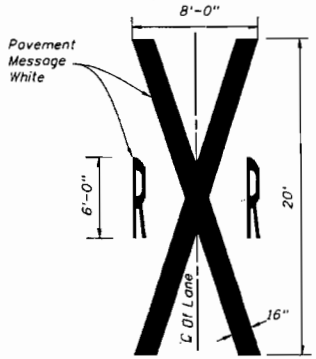

NOTES:

1. When computing pavement message, quantities do not include traverse lines.
2. Placement of sign W10-1 in a residential or business district, where low speeds are prevalent, the W10-1 sign may be placed a minimum distance of 100' from the crossing. Where street intersections occur between the RR pavement message and the tracks an additional W10-1 sign and additional pavement message should be used.
3. A portion of the pavement markings symbol should be directly opposite the W10-1 sign.
4. Recommended location for FTP-61-06 or FTP-62-06 signs, 100' urban and 300' rural. See Index 17355 for sign details.
5. Gate Length Requirements:
   For Two-way undivided sections:
   The gate should extend to within 1' of the center line. On multiple approaches the maximum gate length may not reach to within 1' of the center line. For those cases, the distance from the gate to the center line shall be a maximum of 4'.

   For one-way or divided sections:
   The gate shall be of sufficient length such that the distance from the gate tip to the inside edge of pavement is a maximum of 4'.

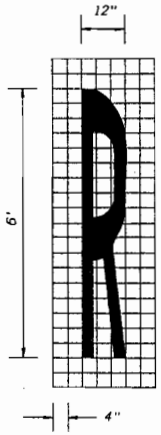

23

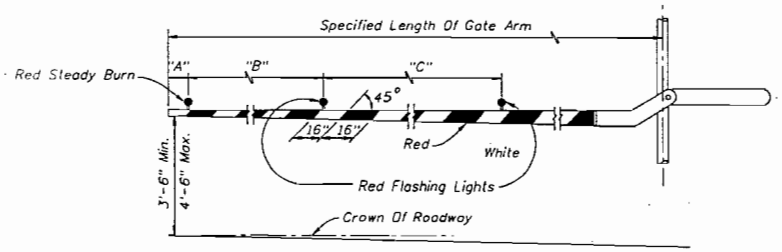

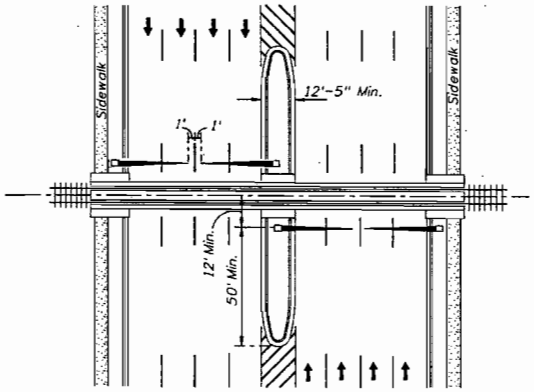

PLAN

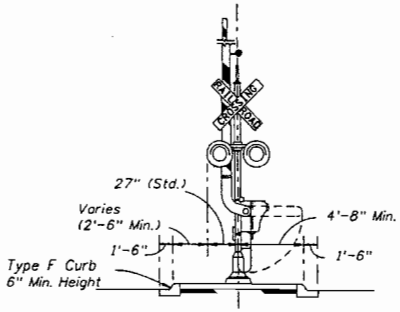

MEDIAN SECTION AT SIGNAL GATES

NOTE:
For additional information see the "Manual On Uniform Traffic Control Devices", Part 8; The "Traffic Control Handbook", Part VIII; and AASHTO "A Policy On Geometric Design Of Streets And Highways".

RAILROAD GATE ARM LIGHT SPACING

Specified Length Of Gate Arm	Dimension "A"	Dimension "B"	Dimension "C"
14 Ft.	6"	36"	5'
15 Ft.	18"	36"	5'
16-17 Ft.	24"	36"	5'
18-19 Ft.	28"	41"	5'
20-23 Ft.	28"	4'	5'
24-28 Ft.	28"	5'	5'
29-31 Ft.	36"	6'	6'
32-34 Ft.	36"	7'	7'
35-37 Ft.	36"	9'	9'
38 And Over	36"	10'	10'

MEDIAN SIGNAL GATES FOR

MULTILANE UNDIVIDED URBAN SECTIONS

(THREE OR MORE DRIVING LANES IN ONE DIRECTION, 45 MPH OR LESS)

24

MIAMI-DADE COUNTY
BOARD OF COUNTY COMMISSIONERS
OFFICE OF THE COMMISSION AUDITOR

Legislative Notes

Agenda No: **8(P)1(I)**

File Number: **090712**

Committee(s) of Reference: **Board of County Commissioners**

Date of Analysis: **April 23, 2009**

Commission District: **4**

Type of Item: Execution of a Four-Party Agreement

Summary

This resolution approves a Four-Party Agreement between Miami-Dade County, the City of Hallandale, the State of Florida Department of Transportation and the Florida East Coast Railway, LLC for the installation of railroad crossing protective devices at N.E. 215 Street, in the vicinity of N.E. 25 Avenue and S.W. 11 Street. The railroad is centered along the County line between Broward County and Miami-Dade County. County will be responsible for the yearly maintenance fee totaling $987.50. The Secondary Gas Tax will be used as the funding source.

Budgetary Impact

The SGT is a tax levy of $.02 on most motor fuel sold in the state which is returned to the counties pursuant to a formula for the construction, reconstruction, and maintenance of roadways. The 2-cent per gallon SGT is levied on motor fuel pursuant to Sections 206.41 and 206.47 of the Florida Statute. All surplus tax is restricted for use on road construction, acquisition, and maintenance. The SGT is collected from all counties by the State of Florida Department of Revenue.

Miami-Dade State Gas Tax Revenue Projections

Historical Data ($ in 000s)							**Projections**	
Actuals FY 01-02	Actuals FY 02-03	Actuals FY 03-04	Actuals FY 04-05	Actuals FY 05-06	Actuals FY 06-07	Actuals FY 07-08	Projected FY 08-09	Projected FY 09-10
$12,212	$12,707	$13,403	$14,007	$13,719	$13,820	$14,849	**$12,732**	**$12,230**

Source: Office of Strategic Business Management (OSBM) Revenue Estimating Worksheet

Comments

The hotel tourist tax revenue collection for the month of January showed a decrease of 14% for Convention Development Tax (CDT) and a 22% decrease for Tourist Development Tax (TDT) and Professional Sports Franchise Facilities Tax (PST). The February tourist tax collections for CDT showed a decrease of 21%, TDT decreased 28%, and PST decreased 28% over the same period in 2008. The CDT, TDT, and PST are used to make debt service payments, payments to other obligations and accumulate necessary reserves.

Similarly, the County depends on the SGT for the funding of construction, reconstruction, and maintenance of our roadways. As shown in the Revenue Estimating Chart above, the SGT collection is not anticipated to grow at levels experienced in recent years. For example, the preliminary SGT collection figures for FY 2008-09 show a decrease of 14% and a 18% decrease for FY 2009-10 from FY 2007-08. Should this trend continue, adjustments may have to be made to future SGT obligations. Furthermore, trends in purchasing of hybrid cars may impact future state gas tax revenue streams.

Prepared by: Michael Amador-Gil