Memorandum

MIAMI-DADE COUNTY

Date: May 5, 2009

Agenda Item No. 8(A)(1)(F)

To: Honorable Chairman Dennis C. Moss
and Members, Board of County Commissioners

From: George M. Burgess
County Manager

Subject: Award Recommendation for Retail, Food and Beverage Concessions Program 2008
RFP No. MDAD-01-08 - Package 2

RECOMMENDATION

It is recommended that the Board award a Lease and Concession Agreement to Taxco Sterling Co., Inc., for the Retail, Food and Beverage Concessions Program 2008 Package 2, and authorize the Mayor or his designee to execute the Agreement attached hereto, with the exhibits on file with the Clerk of the Board.

SCOPE

Miami International Airport (MIA) is located primarily within Commission District Six.

DELEGATED AUTHORITY

In accordance with Miami-Dade County Code Section 2-8.3 related to identifying delegation of Board authority contained within the subject agreement, the Aviation Director or designee has the authority to exercise the renewal options and to terminate the agreement.

FISCAL IMPACT/FUNDING SOURCE

This project is revenue generating. The County shall be paid the greater of a percentage fee of the total monthly gross revenues or the minimum monthly guarantee. The Minimum Annual Guarantee (MAG) submitted by Taxco Sterling Co., Inc. is $216,000. The percentage fee is 17% for the Jewelry, Watches & Accessories category Retail, Food and Beverage Concessions Program 2008.

TRACK RECORD/MONITOR

Taxco Sterling Co., Inc., is currently operating at MIA as a sub-leasee with Westfield Concessions Management and Faber Miami LLC and its performance has been satisfactory. The Project Manager is Miami-Dade Aviation Department (MDAD) Commercial Operations Manager, Adrian Songer.

COMPLIANCE DATA

There is no history of violations for this firm in the Small Business Development Department's database.

BACKGROUND

The RFP for Retail, Food and Beverage Concessions Program 2008 was advertised on June 17, 2008, for qualified firms to propose for the opportunity to provide financing, design and construction, management, operation and maintenance of quality retail, food and beverage locations at Miami International Airport. The RFP contained three packages: Package One, Fashion Accessory-Sunglasses; and Package Two, High-End Jewelry; each consist of one retail location located in the North Terminal. Package Three consists of one food and beverage location (Walkaway-Coffee Shop) located on the third floor of the South Terminal.

The Selection Committee was comprised of the following five voting members: two MDAD staff members, one staff member from the Small Business Development Department, the Director of the Greater Miami Convention and Visitor's Bureau and the General Manager for The Falls, the latter two representatives being from the private sector. The Selection Committee met and reviewed proposals submitted in response to the RFP, and heard presentations from the submitting firms. Six firms originally proposed; however, Ultra Stores, Inc., withdrew from the selection process and the remaining five proposers were deemed responsible and having met the minimum qualification requirements. The selection process consisted of two parts, technical and price. The Committee

proceeded with the technical proposal evaluation. Following the technical proposal ranking, the sealed price envelopes were opened and read aloud. MDAD staff applied the formula for calculation of the price score, as provided in the RFP, and determined an overall ranking based on technical and price combined for each proposer respectively.

The Package 2 overall ranking is as follows:

Adjusted Score	Price	Proposer
4,675	$216,000	Taxco Sterling Co., Inc.
4,192.5	$200,000	Erwin Pearl Miami, LLC

Note that the first-ranked proposer Taxco Sterling Co., Inc., received the highest adjusted score and provided the highest Minimum Annual Guarantee (MAG). Also, the point differential for the adjusted score (technical and price) between the top-ranked proposer Taxco Sterling Co., Inc. and the second-ranked Erwin Pearl Miami, LLC is 482.5 points. Therefore, for Package Two, the Selection Committee recommended award of the agreement to Taxco Sterling Co., Inc.

PROJECT:	Retail, Food and Beverage Concessions Program 2008
PROJECT NO.	RFP No. MDAD-01-08
PROJECT LOCATION:	Miami International Airport
COMPANY NAME:	Taxco Sterling Co., Inc.
TERM OF AGREEMENT:	The lease commences upon the Effective Date of this Agreement and expires at 11:59 p.m. on the last day of the eighth (8) year thereafter, unless sooner terminated.
OPTION(S) TO RENEW:	At the sole discretion of the County, the initial eight (8) year term may be extended for a maximum of one (1) two (2) year term, provided the extension is mutually agreed to by the County and the Master Concessionaire in writing.
COMPANY PRINCIPALS:	Sirilak Briggs Joshua Briggs
GENDER, ETHNICITY & OWNERSHIP BREAKDOWN:	Asian Female / Caucasian Male
COMPANY LOCATION:	10282 Johns Hollow Road Vienna, VA 22182
HOW LONG IN BUSINESS:	Fourteen (14) years
PREVIOUS AGREEMENTS WITH THE COUNTY WITHIN THE PAST FIVE (5) YEARS:	January 2007 – Retail Space Miami Terminal G June 2008 – Retail Space Miami New South Terminal
CONTRACT MEASURE:	Participation in the Airport Concession Disadvantaged Business Enterprise (ACDBE) Program was voluntary.
CONTRACT MEASURE ACHIEVED:	Taxco Sterling Co., Inc. is an ACDBE and will perform at one hundred percent (100%).

ADVERTISEMENT DATE:	June 17, 2008
LIVING WAGE:	Not Applicable
USING DEPARTMENT:	Miami-Dade Aviation Department

Assistant County Manager

MEMORANDUM

(Revised)

TO: Honorable Chairman Dennis C. Moss and Members, Board of County Commissioners

DATE: May 5, 2009

FROM: R. A. Cuevas, Jr. County Attorney

SUBJECT: Agenda Item No. 8(A)(1)(F)

Please note any items checked.

_____ **"4-Day Rule" ("3-Day Rule" for committees) applicable if raised**

_____ **6 weeks required between first reading and public hearing**

_____ **4 weeks notification to municipal officials required prior to public hearing**

_____ **Decreases revenues or increases expenditures without balancing budget**

_____ **Budget required**

_____ **Statement of fiscal impact required**

_____ **Bid waiver requiring County Mayor's written recommendation**

_____ **Ordinance creating a new board requires detailed County Manager's report for public hearing**

_____ **Housekeeping item (no policy decision required)**

_____ **No committee review**

Approved _____ Mayor

Veto _____

Override _____

Agenda Item No. 8(A)(1)(F)

5-5-09

RESOLUTION NO. _____

RESOLUTION APPROVING AWARD OF A NON-EXCLUSIVE AGREEMENT BETWEEN TAXCO STERLING CO., INC. AND MIAMI-DADE COUNTY FOR A MINIMUM ANNUAL GUARANTEE OF $216,000.00, AND FOR AN EIGHT YEAR TERM, WITH TWO ONE YEAR OPTIONS TO RENEW, PURSUANT TO RETAIL, FOOD AND BEVERAGE CONCESSIONS PROGRAM 2008, RFP NO. MDAD-01-08, PACKAGE 2, AND AUTHORIZING COUNTY MAYOR OR HIS DESIGNEE TO EXECUTE SAME, AND TO EXERCISE RENEWAL AND TERMINATION PROVISIONS THEREOF

WHEREAS, this Board desires to accomplish the purposes outlined in the accompanying memorandum, a copy of which is incorporated herein by reference,

NOW, THEREFORE, BE IT RESOLVED BY THE BOARD OF COUNTY COMMISSIONERS OF MIAMI-DADE COUNTY, FLORIDA, that this Board hereby approves the award of a Non-Exclusive Agreement for Retail, Food and Beverage Concessions Program 2008, RFP No. MDAD-01-08, Package 2, between Taxco Sterling Co., Inc. and Miami-Dade County, with a Minimum Annual Guarantee of $216,000 and for an eight year term, with two one year options to renew, in substantially the form attached hereto and made a part hereof, and authorizes County Mayor or his designee to execute same and to exercise renewal and termination provisions thereof.

The foregoing resolution was offered by Commissioner , who moved its adoption. The motion was seconded by Commissioner and upon being put to a vote, the vote was as follows:

Dennis C. Moss, Chairman
Jose "Pepe" Diaz, Vice-Chairman

Bruno A. Barreiro	Audrey M. Edmonson
Carlos A. Gimenez	Sally A. Heyman
Barbara J. Jordan	Joe A. Martinez
Dorrin D. Rolle	Natacha Seijas
Katy Sorenson	Rebeca Sosa
Sen. Javier D. Souto	

The Chairperson thereupon declared the resolution duly passed and adopted this 5th day of May, 2009. This resolution shall become effective ten (10) days after the date of its adoption unless vetoed by the Mayor, and if vetoed, shall become effective only upon an override by this Board.

MIAMI-DADE COUNTY, FLORIDA
BY ITS BOARD OF
COUNTY COMMISSIONERS

HARVEY RUVIN, CLERK

By:_____
Deputy Clerk

Approved by County Attorney as
to form and legal sufficiency.

David M. Murray

FORM OF LEASE AND CONCESSION

AGREEMENT

BY AND BETWEEN

MIAMI-DADE COUNTY, FLORIDA

AND

TAXCO STERLING CO., INC.

CONCESSIONAIRE

(PACKAGE 2)

FOR RETAIL, FOOD AND BEVERAGE CONCESSIONS PROGRAM 2008

AT

MIAMI INTERNATIONAL AIRPORT

TABLE OF CONTENTS

	Page
Definitions	1
Article 1 – Term, Extension and Location	**5**
1.01 Term	5
1.02 Extension	6
1.03 Location	6
1.04 Support Space	6
1.05 Storage Space	6
1.06 Common Warehouse System	6
1.07 Addition, Deletion and Modification of Location	7
1.08 Non-exclusivity	8
1.09 Condition of the Location	8
1.10 Capital Improvement Program	8
1.11 Request for Proposal Incorporated	9
Article 2 – Use of Location	**9**
2.01 Location	9
2.02 Use of Location	9
2.03 Concessionaire Services and Sales Rights	9
2.04 New Concepts	9
2.05 Scope of Services	10
2.06 Annual Plan Submission	13
2.07 Prohibited Activities	13
Article 3 – Rentals, Payments and Reports	**13**
3.01 Minimum Annual Guarantee (MAG)	13
3.02 No Negotiations or Administrative Modifications	14
3.03 Recalculation of the Minimum Annual Guarantee	14
3.04 Percentage Fee to the Department	14
3.05 Concession Category Percentage Fee	15
3.06 Annual Rental	15
3.07 Not Used	16
3.08 Annual Rental Rate Adjustment	16
3.09 Common Warehouse Logistics Fee	16
3.10 Concession Marketing Fee	16
3.11 MAG Performance Bond	16
3.12 Taxes	17
3.13 Reports of Gross Revenues	17
3.14 Other Reports	18

3.15 Late Payment 18
3.16 Dishonored Check or Draft 18
3.17 Address for Payments 18
3.18 Revenue Control Procedures 19
3.19 Annual Audit 19
3.20 Right to Audit/Inspect 19
3.21 Records and Reports 20
3.22 Additional Fees Due 21
3.23 Utilities 21
3.24 Liquidated Damages 21
3.25 Payment Security 22

Article 4 – Improvements to the Location 22
4.01 Improvements to Location 22
4.02 Design of Improvements 23
4.03 Refurbishment of Location 23
4.04 Not Used 24
4.05 Certain Construction Contract Terms 24
4.06 Improvements Free and Clear 24
4.07 Other Requirements 24
4.08 Review of Construction 25
4.09 Cost Documentation 25
4.10 Amortization Schedule 26
4.11 Construction Permit Fee 27
4.12 Construction Services 27

Article 5 – Standards of Operation 29
5.01 Standards of Operation 29
5.02 Market Basket Pricing Policy 29

Article 6 – Obligations of the Department 30
6.01 Department Services 30

Article 7 – Furniture, Fixtures, and Equipment 31
7.01 Furniture, Fixtures, and Equipment 31
7.02 Americans with Disabilities Act Requirements 32
7.03 Disposal of Furniture, Fixtures, and Equipment 32

Article 8 – Maintenance 32
8.01 Cleaning 32
8.02 Removal of Trash 32
8.03 Maintenance and Repair 33
8.04 Failure to Maintain 33

8.05 Environmental Recycling 34
8.06 Fire Protection and Safety Equipment 34

Article 9 – Assignment and Ownership 34
9.01 No Assignment 34
9.02 Ownership of the Concessionaire 34
9.03 Change of Control 34
9.04 Holdover 35

Article 10 – Indemnification 35
10.01 Indemnification Required of Concessionaire 35

Article 11 – Insurance 36
11.01 Insurance Required of Concessionaire 36
11.02 Certificate of Continuity 37
11.03 Insurance Company Rating Requirements 37
11.04 Concessionaire Liable 37
11.05 Cancellation of Insurance or Bonds 37
11.06 Right to Examine 37
11.07 Personal Property 38
11.08 Survival of Provisions 38
11.09 Not used 38
11.10 Indemnification, Construction Bonds and Insurance Required 38

Article 12 – Default and Termination by County 41
12.01 Events of Default 41
12.02 Payment Default 42
12.03 Other Defaults 42
12.04 Habitual Default 43
12.05 Notice of Default and Opportunity to Cure 43
12.06 Unamortized Investment Extinguished 43
12.07 Termination for Abandonment 44
12.08 Termination for Cause 44
12.09 Adequate Assurances 44
12.10 Actions at Termination 45

Article 13 – Claims and Termination by Concessionaire 45
13.01 Administrative Claim Procedures 45
13.02 Termination 45

Article 14 – Voluntary Airport Concession Disadvantaged Business Enterprise (ACDBE) 46
14.01 ACDBE Participation 46

14.02 Counting ACDBE Participation 46
14.03 ACDBE Participation Achieved through Joint Venture (JV) Partnering 47
14.04 Certification-Airport Concession Disadvantaged Business Enterprise (ACDBE) 49
14.05 Affirmative Action and Airport Concession Disadvantaged Business Enterprise Programs 49
14.06 ACDBE Mentoring, Assistance and Training Program 50
14.07 Airport Concession Disadvantaged Business Enterprise Participation 51

Article 15 – Rules, Regulations and Permits 52
15.01 Rules and Regulations 52
15.02 Violations of Rules and Regulations 52
15.03 Permits and Licenses 52

Article 16 – Governing Law 53
16.01 Governing Law; Venue 53
16.02 Notice of Commencement of Civil Action 53
16.03 Labor Peace Requirement 53

Article 17 – Trust Agreement 54
17.01 Incorporation of Trust Agreement by Reference 54
17.02 Adjustment of Terms and Conditions 54
17.03 Inspections 54
17.04 Miami-Dade County Inspector General Review 55

Article 18 – Other Provisions 55
18.01 Payment of Taxes 55
18.02 Alterations by Concessionaire 55
18.03 Rights to be Exercised by Department 55
18.04 Administrative Modifications 55
18.05 Security 56
18.06 Rights of Department at Airport 56
18.07 Other Department Rights 56
18.08 Federal Subordination 56
18.09 Notices 56
18.10 Severability 57
18.11 Rights Reserved to Department 57
18.12 County Lien 57
18.13 Authorized Uses Only 57
18.14 No Waiver 58
18.15 Secured Areas/Airfield Operations Area (AOA) Sterile Areas Security 58
18.16 Intent of Agreement 60
18.17 Modifications 60
18.18 Radon Disclosure 61

18.19 Trademarks and Licenses 61
18.20 Headings 61
18.21 Binding Effect 61
18.22 Governmental Department 61
18.23 Independent Contractor 61
18.24 Other Liens 62

Article 19 – Not Used **62**

Article 20 – Waiver of Claims **62**

Article 21 – Required, General and Miscellaneous Provisions **63**
21.01 Agreements with State of Florida and Miami-Dade County 63
21.02 Right to Amend 63
21.03 Concessionaire Covenants and Assurances 63
21.04 Right to Modify 65
21.05 Tax Exempt Status of Department Revenue Bonds 65
21.06 Remedies 65
21.07 Not Used 65
21.08 Regulations of Department 66
21.09 Interest 66
21.10 Miscellaneous Provisions 66
21.11 Force Majeure 67
21.12 Entire Agreement 67
Signature Page 69

EXHIBITS

Exhibit A – Locations
Exhibit B – Surety Performance and Payment Bond
Exhibit C
Exhibit C -1: Single Form Execution Affidavits
- Public Entity Crimes Affidavit
- Debarment Disclosure Affidavit
- Criminal Record Affidavit
- Disclosure of Ownership Affidavit
- Affirmative Action Plan/Procurement Policy Affidavit

Exhibit C -2: Condition of Award Requirements
Single Form Execution Affidavits
- Disability Nondiscrimination
- Family Leave
- Domestic Leave
- Currently Due Fees and Taxes

- Drug Free Workplace
- Current in County Obligations
- Code of Business Ethics

Subcontracting Policies Statement (No format, insert document)
Subcontractor/Supplier Listing
Proof of Authorization to do Business (No format, insert document)

Exhibit D – Performance Bond for MAG Requirements
Exhibit E – Concessions Design Guidelines
Exhibit F – Tenant Airport Construction-Non-Reimbursable Procedures (TAC-N)
Tenant Airport Construction Reimbursable Procedures (TAC-R)
Exhibit G – Independent Audit Report
Exhibit H – Executed Labor Peace Agreement
Exhibit I – Monthly Report of Gross Revenues
Exhibit J – TSA List of Prohibited Items
Exhibit K - Commercial Operations Tenant Handbook
Exhibit L – Standards of Operation

APPENDIX

Appendix C – Voluntary Airport Concession Disadvantaged Business Enterprise Participation Plan/ Provision

DEFINITIONS

The following words and expressions used in this Agreement shall be construed as follows, except when it is clear from the context that another meaning is intended.

The terms **"Agreement"** shall mean this Lease and Concession Agreement including all exhibits and attachments thereto and a part thereof entered into by the County and the Concessionaire.

The term **"Airport"** shall mean Miami International Airport.

The term "**Airport Concession Disadvantaged Business Enterprise" or "ACDBE"** shall have the meaning ascribed in Article 14 entitled "Voluntary Airport Concession Disadvantaged Business Enterprise".

The term **"ACDBELO"** shall mean Airport Concession Disadvantaged Business Enterprise Liaison Officer, Associate Aviation Director, Minority Affairs Division, Miami-Dade County Aviation Department.

The term **"Approved Improvements"** are the improvements to the Location, which have been approved by the Department which may include the design, equipment, fixtures, flooring, and signage.

The term **"Base Building Work"** shall mean the sub-flooring, ceiling structure, demising walls, utilities infrastructure and other base building improvements, structures and fixtures which the County installs or causes to be installed in the terminal building. Base Building Work includes delivery of portions of the Location in Shell Condition.

The term **"Beneficial Occupancy"** shall mean the date when a Certificate of Occupancy or Temporary Certificate of Occupancy has been received.

The term **"Board"** shall mean Board of County Commissioners of Miami-Dade County.

The term **"Capital Improvement Program"** or **"CIP"** shall mean the Airport's construction program that will involve the refurbishment of terminal interiors, airline relocation, changes in access to the terminal and concourses, construction of new concession locations, and other improvements throughout the Airport.

The term **"Central Terminal"** shall mean the area of the terminal building and concourses, within the central part of the terminal area, landside or airside which is now known as Concourses E thru G.

The term **"Code"** shall mean the Code of Miami-Dade County, Florida.

The term **"Common Logistics Fee"** shall mean an amount to be invoiced as a separate line item by the Concessionaire for the purpose of reimbursing, without profit or administrative markup, a County imposed or approved logistics program which the Concessionaire may be reimbursed for

actual out-of-pocket expenses incurred excluding any administrative overhead in order to lease off-Airport properties for storage or operate on the Airport and operating a common logistical support service as may be necessary for the efficient operation of the Retail Program.
The term **"Common Logistics Program"** shall mean a program to offer logistics support either on or off Airport which may include leasing of Airport property for storage; delivery services or equipment necessary to the operation of a common logistics system.

The term **"Concessionaire"** shall mean the person, firm, or entity that enters into this Lease and Concession Agreement with the County.

The term **"Consumer Price Index"** or "**CPI**" shall mean that index published by the United States Department of Labor, Bureau of Labor Statistics known as the Consumer Price Index for all urban consumers ("CPI-U") in the U.S. Cities Average: All items.

The term "**County**" shall mean Miami-Dade County, Florida, a political subdivision of the State of Florida.

The term **"Days"** shall mean calendar days, unless specifically stated as other.

The term "**Department**" or **"MDAD"** shall mean the Miami-Dade Aviation Department.

The term **"Director"** shall mean the Director of the Miami-Dade Aviation Department or the Director's designee.

The term **"Extension"** shall mean the addition of one (1) separate two (2) year term following the Term.

The term **"Gross Revenues"**, as used in this Agreement, shall mean all minimum annual guaranteed rents and percentage fees, if any, paid or payable by the Concessionaire any consideration of determinable value paid or payable to the Concessionaire by any third party (for example, retail display allowances and other promotional incentives). However, the term Gross Revenues shall not include: (i) any and all pass-through charges such as any sums collected for federal, state, County and municipal taxes imposed by law upon the sale of merchandise or services, utilities, the Common Logistics Fee and contribution to the Marketing Program; (ii) any refund given to the customer because of a customer satisfaction issue which must be documented and auditable or (iii) promotional discount and coupon offers issued to customers as a result of a Department approved marketing plan.

The term **"Gross Receipts"** shall mean Gross Revenues received by Concessionaire .

The term **"Lease Effective Date"** shall mean the tenth (10th) business day after the date of execution by the County Manager and attestment by the Clerk of the Board of the Lease and Concession Agreement.

The term **"Location"** shall mean the concession locations as depicted on Exhibit A, "Concession Location".

The term **"Location Commencement Date"** shall mean for the Location, the date of Beneficial Occupancy.

The term "**Minimum Annual Guarantee" or "MAG"** shall mean as ascribed in Sub-Article 3.01 of this Agreement.

The term **"Minimum Monthly Guarantee"** shall mean as ascribed in Sub-Article 3.01 of this Agreement.

The term **"Non-exclusivity"** shall mean as ascribed in Sub-Article 1.10 of this Agreement.

The term **"Market Basket "** shall mean that MIA concession store prices shall not exceed by more than 10% stated market basket of a selection of three (3) Greater Miami Area locations where visitors may purchase similar product categories excluding stadiums, arenas, amusement and entertainment venues and hotels.

The term "**North Terminal**" shall mean the area of the terminal building and concourses, within the north part of the terminal area, landside or airside now known as Concourses A-D.

The term "**Proposal"** shall mean a Proposer's written response to RFP MDAD-01-08.

The term **"Refurbishment of Location"** shall mean the refurbishment and expenditure by the Concessionaire of not less than fifty dollars per square foot ($50psf) for Approved Improvements to begin no earlier than the sixth (6th) Term year of the Agreement and be completed no later than the last day of the sixth (6th) Term year of this Agreement.

The term **"Request for Proposal" or "RFP"** shall mean this RFP MDAD-01-08 and all associated Addenda, Exhibits, Forms, Affidavits and Attachments.

The term **"Retail"** when used in this Agreement shall mean the retail, and food & beverage Locations as depicted in Exhibit A of the Lease and Concession Agreement.

The term **"Retail Concession Design Guidelines"** shall mean MIA's distinct design guidelines in the North, Central, and South Terminals as set forth in Exhibit E.

The term **"Shell Condition"** shall mean smooth concrete floors, demising studs and walls, and the utility services listed below (conduits, lines, pipes, etc.) stubbed to the lease lines of the Location or area immediately adjacent thereto for electric, telephone and data communications, heating ventilating and air conditioning systems including ducts ("HVAC"), fire alarm system and fire sprinkler system.

The term "**South Terminal**" shall mean the area of the terminal building and concourses, within the south part of the terminal area, landside or airside which is now known as Concourse H, and a new J Concourse and connecting concession and public locations.
The term **"State"** shall mean the State of Florida.

The term "**Term" shall** mean the County hereby leases to the Concessionaire the Locations depicted in Exhibit A commencing upon the Lease Effective Date of this Agreement and expiring at 11:59 P.M. on the last day of the eighth (8) year thereafter unless sooner terminated. In no event shall this Agreement afford Concessionaire, or any other party any right to use or occupy the Locations (or any part thereof) after the expiration, termination of the Agreement.

The term **"TSA"** shall mean the United States Transportation Security Administration, and any successor agency, office or department thereto.

The term "**Turnover Date**" shall mean the date approved by the Department for the Concessionaire to commence construction of the Location.

LEASE AND CONCESSION AGREEMENT
FOR A NON-EXCLUSIVE
CONCESSIONAIRE
FOR RETAIL FOOD AND BEVERAGE CONCESSIONS PROGRAM 2008

AT
MIAMI INTERNATIONAL AIRPORT

THIS LEASE AND CONCESSION AGREEMENT is made and entered into as of this _____ day of _____, 200___, by and between MIAMI-DADE COUNTY, FLORIDA, a political subdivision of the State of Florida and **Taxco Sterling Co., Inc.** ("Concessionaire"), a _____Corporation authorized to business in the State of Florida.

RECITALS:

WHEREAS, the County is the owner of and operates Miami International Airport through the County's Miami-Dade Aviation Department; and

WHEREAS, the Department desires to create a retail concessions program in conjunction with the development program for the North, and South Terminal projects; and

WHEREAS, the concessions program is designed to provide a locally, nationally, and internationally recognized themed tenant base; and

WHEREAS, the retail concessions program will enhance the accommodations and conveniences of airline passengers and Airport patrons, and project a positive image of the Airport, the Department, and the County to visitors, as further described herein; and

WHEREAS, Request for Proposal RFP No. MDAD-01-08 for this project was issued by the County and in response to the Request for Proposal, the County received proposals and an award has been made to the Concessionaire,

NOW, THEREFORE, in consideration of the mutual covenants herein contained, the parties agree as follows:

ARTICLE 1 – TERM, EXTENSION AND LOCATION

1.01 TERM: The County hereby leases to the Concessionaire the Locations depicted in Exhibit A commencing upon the Lease Effective Date of this Agreement and expiring at 11:59 P.M. on the last day of the eighth (8) year thereafter unless sooner terminated. In no event shall this Agreement afford Concessionaire or any other party any right to use or occupy the Locations (or any part thereof) after the expiration, termination of the Agreement.

1.02 EXTENSION: At the sole discretion of the County, the initial eight (8) year Term may be extended for a maximum of one (1) two (2) year term provided the extension is mutually agreed to by the County and the Concessionaire in writing.

In the event the County elects to extend the Agreement, the Concessionaire shall be notified, in writing, no less than one hundred and twenty (120) Days prior to the expiration of the Term. The Concessionaire may elect not to agree to the extension, and, if so, must notify the Department thirty (30) Days after receipt of written notification by the Department to extend the Agreement. In the event the Department does not give such notice, the Agreement shall expire accordingly.

In the event the Concessionaire is in default, pursuant to **Article 12, Default and Termination by County**, of the Lease and Concession Agreement beyond applicable grace and cure periods, the County shall not exercise its rights to extend the Agreement.

1.03 LOCATION: The Department hereby identifies to the Concessionaire the Location as depicted in Exhibit A, Concession Location.

1.04 SUPPORT SPACE: In addition to the Location provided to the Concessionaire in **Sub-Article 1.03, Location,** the Department may provide administrative and support space, if available, to the Concessionaire.

The Concessionaire shall pay monthly rental payments for the Concessionaire's administrative and support space is at the rate applicable for terminal rental payments and annual adjustments as provided for in **Sub-Article 3.06, Annual Rental**.

1.05 STORAGE SPACE: The Department may make available to the Concessionaire storage space outside of the Location, if available.

1.06 COMMON WAREHOUSE SYSTEM: Due to the fact that storage space is limited in this Agreement and such space is separate from the Location, should the Concessionaire determine, in its sole discretion, the need to use off-Airport properties for storage space, the Concessionaire shall be entitled through itself, or through an independent third-party contractor, to operate a common logistical support service with respect to the delivery and storage of merchandise, inventory, equipment and supplies to a central commissary warehouse location off of the Airport and the re-delivery of merchandise, inventory, equipment and supplies to the Location at the Airport. The Department may elect to initiate a Common Logistics Program to assist in storage, delivery equipment and supplies in which case a Common Logistics Fee may be assessed to Concessionaire.

In the event of a Department initiated Common Logistics Program, the actual costs incurred to rent any such off-Airport properties for storage and/or the actual costs incurred in the operation of the common logistical support service program (including the purchase or renting of equipment needed to operate such program), as may be determined by the Department from time to time, shall be included in the Common Logistics Fee.

1.07 ADDITION, DELETION AND MODIFICATION OF LOCATION:

A. **ADDITION OF LOCATION:** If at any time after the Lease Effective Date, the Department, at its sole discretion, identifies any additional location for concession development comparable to the concept categories in this Agreement, the Department may, but is not required to, offer such additional location to the Concessionaire upon written notification. The Concessionaire will have thirty (30) Days to submit a written response accepting or rejecting the additional location. Acceptance of any additional location will require the Department and the Concessionaire to mutually agree upon an applicable retail category as described in Exhibit L at the applicable category percentage fee, **Sub-Article 3.05, Concession Category Percentage Fee**, prior to final approval.

B. **ADDITION OF TEMPORARY LOCATION:** The Department reserves the right to require the Concessionaire to provide, and cause to be operated, a temporary location. A temporary location will be required to provide passenger services in locations where airlines are offering service. Any rent for the Location is subject to the terms of this Agreement. The square footage for the temporary location shall not be included in the calculation of the Minimum Annual Guarantee pursuant to **Sub-Article 3.01, Minimum Annual Guarantee**. All such concepts, plans, fixtures, equipment and merchandising are subject to review and approval by the Department and, to the extent necessary, other County agencies.

C. **DELETION OR MODIFICATION OF LOCATION:** The Department reserves the right, at its sole discretion, to delete or modify any of the Location, or any administrative support and storage space due to Airport development/construction, operational necessity, and security or safety considerations. In the event of such deletion or modification the Concessionaire shall be given no less than: (i) thirty (30) Days written notice, for such deletion or modification due to operational necessity, and security or safety considerations; and (ii) sixty (60) Days written notice, for such deletion or modification due to development/construction.

The Department shall not be held liable to the Concessionaire (except for reimbursement of the unamortized costs, pursuant to **Sub-Article 4.10, Amortization Schedule**) for any inconvenience or loss of business as a result of the deletion or modification of any Location or other space pursuant to this Sub-Article.

D. **ADMINISTRATIVE REVISIONS:** This Agreement shall be administratively revised to reflect any additions, deletions or modifications to the Locations pursuant to the provisions herein. Such revision will include revised exhibits and appropriate changes to the Locations in **Sub-Articles 1.03 "Location", 1.04, "Support Space", and 1.05 "Storage Space"** and total payments due the Department in accordance with **Article 3, Rentals, Payments and Reports** and **Article 2 Use of Locations.**

1.08 **NON-EXCLUSIVITY:** This Agreement is nonexclusive in character and in no way prevents the Department from entering into an agreement with any other parties for the sale or offering of competitive services, products or items by other concessionaires and/or others in other locations at the Airport during the Term, or any Extension thereto of this Agreement.

1.09 **CONDITION OF THE LOCATION: CONCESSIONAIRE SPECIFICALLY ACKNOWLEDGES AND AGREES THAT THE DEPARTMENT IS LEASING THE LOCATION TO THE CONCESSIONAIRE ON AN "AS IS" BASIS AND THAT THE CONCESSIONAIRE IS NOT RELYING ON ANY REPRESENTATIONS OR WARRANTIES OF ANY KIND WHATSOEVER, EXPRESS OR IMPLIED, FROM THE DEPARTMENT OR ITS AGENTS, AS TO ANY MATTERS CONCERNING THE LOCATION** including: (i) the quality, nature, adequacy and physical condition and aspects of the Location, including utility systems; (ii) the existence, quality, nature, adequacy and physical condition of utilities serving the Location; (iii) the development potential of the Location, the use of the Location, and the habitability, merchantability, or fitness, suitability, value or adequacy of the Location for any particular purpose; (iv) the zoning or other legal status of the Location or any other public or private restrictions on use of the Location; (v) the compliance of the Location or its operation with any applicable laws, regulations, statutes, ordinances, codes, covenants, conditions, and restrictions of any governmental or quasi-governmental entity or of any other person or entity; (vi) the presence of hazardous materials or industrial wastes on, under or about the Location; (vii) the quality of any labor and materials used in any improvements on the Location; (viii) the condition of title to the Location; (ix) the agreements affecting the Location; and (x) the Proposal submitted by Concessionaire to the Department, including any statements relating to the potential success or profitability of such Proposal. Concessionaire represents and warrants that it has made an independent investigation of all aspects of its Proposal contemplated by this Agreement. Except as specifically provided in this Agreement, the Concessionaire has satisfied itself as to such suitability and other pertinent matters by the Concessionaire's own inquiries and tests into all matters relevant in determining whether to enter into this Agreement. The Concessionaire accepts the Location in their existing condition, and hereby expressly agrees that if any remediation or restoration is required in order to conform the Location to the requirements of applicable law, the Concessionaire assumes sole responsibility for any such work.

1.10 **CAPITAL IMPROVEMENT PROGRAM:** The Capital Improvement Program (CIP) is currently underway and will involve the refurbishment of terminal interiors, airline relocation, changes in access to the terminal and concourses, construction of new concession locations, and other improvements that may affect concession operations in the terminal building and on the concourses and access at the curbside or on the airfield. The CIP may affect the operation of the Location, and **THE DEPARTMENT NEITHER MAKES NOR IMPLIES ANY WARRANTIES AS TO THE EFFECT OF SUCH CAPITAL IMPROVEMENT PROGRAM ON SAID OPERATIONS DURING THE TERM AND ANY EXTENSION OF THIS AGREEMENT.** The Department shall use

reasonable good faith efforts to the extent possible, so as to mitigate any adverse impact on the business operations of the Location that will not be demolished by the CIP.

1.11 REQUEST FOR PROPOSAL INCORPORATED: The Concessionaire acknowledges that it has submitted to the County a Proposal, in response to a RFP, that was the basis for the award of this Agreement and upon which the County relied. The RFP for this project and the proposal received in response to the advertisement for this project are incorporated into this Agreement. **IN THE EVENT THERE ARE ANY CONFLICTS BETWEEN THIS LEASE AND CONCESSION AGREEMENT AND THE RFP OR THE PROPOSAL, THE TERMS OF SAID AGREEMENT SHALL GOVERN.**

ARTICLE 2 – USE OF LOCATION

2.01 LOCATION: The Location as referenced in Exhibit A, Concession Location shall be used solely for their assigned and approved concept category unless otherwise modified pursuant to **Sub-Article 2.04, New Concepts**. Failure to maintain the concept category pursuant to **Article 2, Use of Location**, may result in liquidated damages as indicated in **Sub-Article 3.24, Liquidated Damages.**

2.02 USE OF LOCATION: The Concessionaire shall have the right, privilege, and obligation to finance, design and construct, lease, manage, operate, and maintain the Location, depicted in Exhibit A, Concession Location, for the purpose of establishing high quality, state of the art retail concessions as approved by the Department.

2.03 CONCESSIONAIRE SERVICES AND SALES RIGHTS: The Concessionaire shall not allow any services or the sale of any item or product not specifically covered by the category approved for the Location in this Agreement. Any such sales by the Concessionaire of services, products, or items not specifically approved herein, in writing by the Department, may constitute a violation. In the event of such violation, the Concessionaire shall discontinue the sale or service of the unapproved product immediately, upon written notice from the Department. Failure by Concessionaire to discontinue such sales within 24 hours shall subject the Concessionaire to liquidated damages pursuant to **Sub-Article 3.24, Liquidated Damages**. Upon the assessment of thirty (30) Days of liquidated damages against a Concessionaire for violation committed by such Concessionaire, a notice of default will be tendered.

2.04 NEW CONCEPTS: The Concessionaire and the Department may modify, by mutual agreement, certain concepts within the established categories and among the Location through an Administrative Modification. The proposed new concept as agreed to by the Department and the Concessionaire will be reflected in a revised Exhibit A, a revised Percentage Fee as applicable for the category as provided for in **Article 3, Rentals, Payments and Reports**, and a revised **Article 2, Use of Location.**

2.05 SCOPE OF SERVICES: The Concessionaire hereby agrees that it will finance, design and construct, lease, manage, operate and maintain the Location depicted in Exhibit A, Concession Location, for the purpose of establishing high quality, state of the art retail concessions as approved by the Department. Its responsibilities are further defined but not limited to the following:

A. Financing:

Be capable of financing the design, construction and build out of the Location depicted on Exhibit A, Concession Location.

Develop a financial plan indicating the source of funding for capital investment and continued maintenance and operation of the Location.

B. Developing:

Design a concession location and layout for the concept category in concert with the appropriate MIA Concession Design Guidelines.

C. Design and Construction Coordination:

Design and Construction Coordination requirements are detailed in **Article 4, Improvements to the Location**.

D. Not Used

E. Voluntary ACDBE Participation

FOR EACH PACKAGE, specifically listing the Package Number, and as further detailed below:

ACDBE Plan – Packages One (1) and Two (2) – **Article 14 "Voluntary Airport Concession Disadvantaged Business Enterprise"** requirements and **Appendix C " Voluntary Airport Concession Disadvantaged Business Enterprise Participation Plan/Provision"** as stated below:

The Proposer shall demonstrate a commitment in the participation of the County's ACDBE program, including a commitment to maximize the participation of certified ACDBE's in providing retail, food and beverage concession services.
Proposer shall submit evidence that there shall be at least:

Information that will clearly detail the minimum amount of operational time that the certified ACDBE will spend on site in the operation and participation of retail, food and beverage concession services.

Submit for evaluation the proposed ACDBE Participation Plan emphasizing concession opportunities.

If proposing as a joint venture, the proposal must specify the following:

When an ACDBE performs as a participant in a Joint Venture, count a portion of the Gross Revenues equal to the distinct clearly defined portion of the work of the concession that the ACDBE performs with its own forces toward ACDBE goals. The work should be detailed separately from the work performed by the non-ACDBE JV partner.

Each certified ACDBE partner must share in the ownership, control, management, administrative responsibilities, risks and profits of the JV in direct proportion to its stated level of JV participation.

Each certified ACDBE JV partner must perform work that is commensurate with the scope of services of the Lease and Concession Agreement.

The Proposer must follow the instructions for the ACDBE participation provisions described in **Article 14 "Voluntary Airport Concession Disadvantaged Business Enterprise"** and the instructions detailed in **Appendix C "Voluntary Airport Concession Disadvantaged Business Enterprise Participation Plan/Provision"** and complete, sign and submit with the Proposal any required form(s), as may be applicable, as part of the Technical Proposal.

F. Managing

The Concessionaire shall, if applicable:

1. Design a concession program fulfilling the concept category and submit a merchandising plan initially and for annual review until expiration of the Agreement identifying the product categories for the Location. The Concessionaire will review the store layout plan no less than annually and update the store layout as necessary throughout the Agreement.
2. Manage the Location in a way that maximizes the highest and best use and financial return to the Department.
3. Monitor and enforce compliance with the terms and conditions of the Lease and Concession Agreement, including but not limited to, use clauses, customer service, insurance, pricing, capital expenditures, quality of merchandise, hours of operation, detailed reporting of sales, payment of fees, rent, and signage.
4. Function as operations liaison between the Department, governmental agencies, and others.
5. Maintain permanent records for the Location leased.

6. Maintain computerized records on a commercially available property management software program acceptable to the Department. Programs and all data collected should be available to the Department on-line (digital and electronic).
7. Establish and maintain for the Department a database, including correspondences.
8. Develop, maintain and make available, if requested, all files, to include copies of licenses, permits, insurance certificates, and letters of credit.
9. Provide from time to time, as requested by the Department, annual financial statements demonstrating its financial capacity to perform its obligations under the terms of the Agreement.

G. Operating

The Concessionaire shall:

1. Provide quality control audits and reports, including maintenance of the street pricing requirements covering compliance with contract requirements, cleanliness of the Location, timeliness of service, quality of the product
2. Generate monthly reports to the Department, including sales by unit, concept and Location.
3. Develop annual revenue projections by month, by Location, concession category, and product category to be updated on a regular basis.
4. Generate and provide the Department monthly airport revenue reports, and such other financial and management reports as are usual and customary in sophisticated airport concession management programs. Prepare other reports and analyses as may be requested periodically by the Department, including number of transactions per hour, average sales per transaction, and sales per product category.
5. Provide on-site staff to perform daily functions as required by the Scope of Services and the Standards of Operations identified in this Lease and Concession Agreement, subject to acceptance by the Department
6. Ensure compliance, with the Department and other governmental agency ID Badging requirements.
7. Implement any new policies, and procedures, and operational directives as issued from time to time by the Department.
8. Ensure payment is submitted with the Monthly Report of Gross Revenues to the Department.
9. Respond to customer/passenger complaints on a timely basis. Ensure customer service program compliance. The Concessionaire will submit its/their customer service-training program within thirty (30) Days of the Lease Effective Date of the Agreement, for the Department's review and approval.
10. Coordinate and implement regular employee customer service training programs, to include employees from the Concessionaire.
11. Participate in an airport-wide customer service program implemented by the

Department.

H. Maintaining

The Concessionaire shall:

1. Maintain or cause to maintain the Location pursuant to Department standards, which may be promulgated from time to time.
2. Coordinate and maintain general oversight of deliveries of goods and products for the concession operations from any designated on or off-Airport storage area.
3. Shall take such corrective action as necessitated to maintain Location in acceptable condition as required by the Department.

2.06 ANNUAL PLAN SUBMISSION: The Concessionaire shall prepare a marketing plan. The marketing plan shall be submitted to the Department on or before ninety (90) Days prior upcoming fiscal year for the Department (October 1 – September 30). The Department shall have forty-five (45) Days after receipt of the foregoing plan to approve or disapprove the same in its discretion. If MDAD disapproves the plan, the Concessionaire shall operate in substantial conformity with all such plans approved by the Department as may be modified from time to time.

The Department reserves the right to request at any time any further submission of plans.

2.07 PROHIBITED ACTIVITIES: Without limiting any other provision herein, Concessionaire shall not, without the prior written consent of the Department which may be withheld in its sole and absolute discretion: (a) advertise or hold any distress, fire, or bankruptcy sales, (b) cause or permit anything to be done, in or about the Location, or bring or keep anything thereon which might (i) increase in any way the rate of fire insurance on the MIA Terminal Building or any of its contents, (ii) create a nuisance or annoyance or safety hazard, or (iii) obstruct or interfere with the rights of others in the MIA Terminal Building; (c) commit or suffer to be committed any waste upon the Location; (d) use, or allow the Location to be used, for any improper or unlawful purpose; (e) do or permit to be done anything in any way tending to injure the reputation of the Department, the County, the Board of County Commissioners, or the appearance of the Airport; or (f) construct any improvement on or attach any equipment to the roof of the Airport. Except as required to permit Concessionaire to perform its maintenance and repair obligations under this Agreement, Concessionaire shall not gain access to the roof of the MIA terminal building without the consent of the Department, which may be withheld in the Department's sole and absolute discretion.

ARTICLE 3 – RENTALS, PAYMENTS AND REPORTS

3.01 MINIMUM ANNUAL GUARANTEE (MAG): As consideration for the privilege to engage in business at Miami International Airport, Concessionaire shall pay the Department the amount of **$216,000** annually as may be adjusted by the prorated amount stated below and subject to recalculation pursuant to **Sub-Article 3.03, Recalculation of the Minimum Annual Guarantee**, inclusive of Location rent.

The Minimum Annual Guarantee ("MAG") payment shall be in U.S. funds, prorated and payable in twelve equal monthly payments ("Minimum Monthly Guarantee" or "MMG") on or before the first day of each month, in advance, without billing or demand, plus applicable taxes as may be required by law.

3.02 NO NEGOTIATIONS OR ADMINISTRATIVE MODIFICATIONS: The Concessionaire understands and agrees, as a condition precedent to the County's consideration of the proposal, that the terms and conditions of **Sub-Article 3.01, Minimum Annual Guarantee**, and **Sub-Article 3.04, Percentage Fee to the Department**, are not subject to negotiation or adjustment for any reason, including, but not necessarily limited to, airport construction, airline relocation, airline bankruptcies, change in airline service, and the like, except in the event of an act of God or an event of force majeure as such term is defined in **Sub-Article 22.11, Force Majeure**. Nor shall the County be liable for any reduction in sales or disruptions or delays caused in whole or in part by any of the foregoing at any time during the Term and any Extension of this Agreement. If the Concessionaire's Location is so damaged as to significantly impact the Concessionaire's operations for a period in excess of seventy two (72) hours, the Department shall provide a proportionate abatement of the MMG for that portion of the Location rendered unusable for that period of time that the County is unable to make repairs required by **Sub-Article 6.01, Department Services**.

3.03 RECALCULATION OF THE MINIMUM ANNUAL GUARANTEE: The Minimum Annual Guarantee shall be recalculated as of the first day of the month immediately following the anniversary of the Lease Effective Date and every year thereafter. An appropriate adjustment will be made to reflect the change in the Consumer Price Index ("CPI") for all urban consumers ("CPI-U") in the U.S. Cities Average: All Items, for the published, preceding twelve-month period.

3.04 PERCENTAGE FEE TO THE DEPARTMENT: The Concessionaire shall pay the Department the total percentage fee of Gross Revenues or the Minimum Monthly Guarantee; whichever is greater, for the Location. The monthly percentage fee shall be due on the tenth (10th) Day of the month following the month during which the monthly gross revenues were received or accrued.

The Monthly Percentage Fee payments to the Department shall commence upon the Beneficial Occupancy for the Location.

Monthly Percentage Fee payments to the Department payable on any unreported Gross Revenues, determined by the annual audit required pursuant to **Sub-Article 3.19, Annual Audit**, are considered as having been due on the tenth (10th) Day of the month following the month during which the unreported Gross Revenues were received or accrued.

To the extent the Concessionaire and the Department mutually agree to change a concept category for the Location, then the corresponding percentage fee, as listed per category in **Sub-Article 3.05, Retail Category Percentage Fee**, will be adjusted accordingly.

3.05 CONCESSION CATEGORY PERCENTAGE FEE: The Concessionaire shall pay the Department the Percentage Fee for the corresponding category. The Concessionaire percentage will be paid for the Location operated by the Concessionaire. The following is the applicable "Percentage Fee per Category" acceptable for the concept category.

CONCEPT CATEGORY	APPLICABLE PERCENTAGE
RETAIL	
Bookstores	**12%**
News & Gift	**19%**
Newsstands	**16%**
Entertainment & Electronics	**11%**
Fashion Apparel & Accessories	**14%**
Gift Specialty Shops	**16%**
Jewelry, Watches & Accessories	**17%**
Sundries, Personal Care	**17%**
Travel Accessories	**17%**
FOOD & BEVERAGE	
Coffee Shop/Café - Branded	**10%**
Coffee Shop/Café – Self Branded	**15%**
Coffee Shop/Café – Beer &Wine	**15%**
Coffee Shop/Café-Liquor	**19%**

3.06 ANNUAL RENTAL: The Concessionaire shall be required to pay rent at the prevailing terminal class rates for the lease of support and storage spaces provided by **Sub-Articles 1.04 "Support Space"** and **1.05 "Storage Space"**, prorated and payable in equal monthly installments in U.S. funds, on the first day of each and every month, in advance and without billing or demand, at the offices of the Department as set forth in **Article 3.17, Address for Payments**.

28

3.07 NOT USED

3.08 ANNUAL RENTAL RATE ADJUSTMENT: On October 1st of each year of the Agreement, the rental rates, pursuant to **Article 3.06, Annual Rental**, shall be subject to recalculation and adjustment in accordance with the policies and formulae approved by the Board of County Commissioners, as may be amended from time to time. When such adjusted rental rates are established, this Agreement shall be considered and deemed to have been administratively amended to incorporate such adjusted rental rates, effective as of such October 1st date. Payments for any retroactive rental adjustments shall be due upon billing by the Department and payable within ten Days of same.

3.09 COMMON WAREHOUSE LOGISTICS FEE: In the event the Department initiates a Common Logistics Program, the actual costs incurred to rent any such off-Airport properties for storage and the actual costs incurred in the operation of the common logistical support service program (including the purchase or renting of any equipment needed to operate such program), as may be determined by the Department and/or the Concessionaire from time to time, shall be included in the Common Logistics Fee. All funds received by Concessionaire as part of the Common Logistics Fee shall not be included in Concessionaire's Gross Revenues for any and all purposes of this Agreement. The Department reserves the right to approve and review the basis of the actual costs and allocation thereof should the Concessionaire elect to implement a common logistics support service program. The Department also reserves the right to either itself impose or require that the Concessionaire impose the Common Logistics Fee in a non-discriminatory manner within store categories.

3.10 CONCESSION MARKETING FEE: A concession marketing fee of one half (1/2) of one percent (1%) of Gross Revenues will be assessed annually to be paid to the Department monthly, beginning the month following the opening of the Location on the twentieth (20th) of each month to be used for marketing the concessions at the Airport.

3.11 MAG PERFORMANCE BOND: Within thirty (30) Days of the Lease Effective Date of this Agreement, the Concessionaire shall provide the Department a Performance Bond to guarantee payment of the MAG and rental for the lease of support and storage spaces. Concessionaire shall keep such Performance Bond in full force and effect during the Term and any Extension of this Agreement, as applicable, and thereafter until all financial obligations, reports or other requirements of this Agreement are satisfied. The Performance Bond shall be a surety bond. In the alternative, an irrevocable letter of credit, or other form of security acceptable to the Department may be furnished. Any such form of security instrument shall be endorsed as to be readily negotiable by the Department for the payments required hereunder. The Performance Bond or other security instrument shall be effective for the current year of operation with automatic renewal for each of the remaining years under this Agreement, including any extensions naming the County as obligee and issued by a surety company or companies in such form as approved by the County Attorney. The amount of the Performance Bond or other security instrument shall

initially be in an amount equal to seventy-five percent (75%) of the MAG amount provided for in **Sub-Article 3.01**, and seventy-five percent (75%) of any annual rental and applicable taxes for the lease of support and storage spaces set forth in **Sub-Article 3.06**. Thereafter, the amount shall be adjusted as necessary to reflect any increases in the MAG and lease of support and storage spaces.

The Department may draw upon such form of security instrument, if the Concessionaire fails to pay any monies or perform any obligations required hereunder following applicable notice and cure periods specified herein. Upon notice of any such draw, Concessionaire shall immediately replace the Performance Bond with a new Performance Bond in the full amount of the Performance Bond required hereunder. A failure to renew the Performance Bond, or increase the amount of the Performance Bond, or other forms of security instrument, if required due to such draw, shall (i) entitle the Department to draw down the full amount of such Performance Bond, and (ii) be a default of this Agreement entitling Department to all available remedies. Provided Concessionaire is not in default and fully complies with all the payment requirements of this Agreement, the payment security instrument will be returned to Concessionaire within one hundred eighty (180) Days after the end of the Term or any Extension of the Term.

3.12 TAXES: The Concessionaire shall be solely responsible for the payment of all applicable taxes, levied upon the fees and other charges payable by the Concessionaire to the Department hereunder, whether or not the same shall have been billed or collected by the Department, together with any and all interest, liquidated damages and charges levied thereon. The Concessionaire hereby agrees to indemnify the County and Department and hold it harmless from and against all claims by any taxing authority that the amounts, if any, collected from the Concessionaire and remitted to the taxing authority by the Department, or the amounts, if any, paid directly by the Concessionaire to such taxing authority, were less than the total amount of taxes due, and for any sums including interests and liquidated damages payable by the Department as a result thereof. The provisions of this paragraph shall survive the expiration or earlier termination of this Agreement.

3.13 REPORTS OF GROSS REVENUES: On or before the tenth (10th) calendar day following the end of each month throughout the Term and any Extension of this Agreement, the Concessionaire shall furnish to the Department, a Statement of Monthly Gross Revenues, using Exhibit I "Monthly Report of Gross Revenues". The report shall report the Location under this Agreement, together with any percentage fee due to the Department pursuant to **Sub-Article 3.04, Percentage Fee to the Department**. The Concessionaire shall certify as to the accuracy of such Gross Revenues in such form as shall be prescribed by the Department. The Department may modify from time to time, the form of reporting upon not less than thirty (30) Days written notice to the Concessionaire. The statement must be signed by an officer (if the Concessionaire is a corporation), partner (if a partnership), or owner (if a sole proprietorship) of the Concessionaire, and identify the Gross Revenues for the Location reported to the Concessionaire during such month. Failure to comply within ten (10) Days following the due date of the report shall result in a

late fee liquidated damage of fifty dollars ($50.00) per Day, as provided in **Sub-Article 3.24, Liquidated Damages.**

3.14 OTHER REPORTS: The Concessionaire shall provide the Department with financial data and operating statistics in a format and frequency specified by the Department, and the Department shall provide no less than thirty (30) Days written notice of the format and frequency required for said financial data and operating statistics.

3.15 LATE PAYMENT: In the event the Concessionaire fails to make any payments as required to be paid under the provisions of this Agreement within ten (10) business days of the due date, delinquency charges established by the Board will be imposed. Such rate is currently 1½% delinquency charge per month.

3.16 DISHONORED CHECK OR DRAFT: In the event the Concessionaire delivers a dishonored check or draft to the Department in payment of any obligation arising under this Agreement, the Concessionaire shall incur and pay a service fee of TWENTY-FIVE DOLLARS ($25.00), if the face value of the dishonored check or draft is fifty dollars ($50.00) or less, THIRTY DOLLARS ($30.00) if the face value of the dishonored check or draft is more than fifty dollars ($50.00) and less than three hundred dollars ($300.00), or FORTY DOLLARS ($40.00), if the face value of the dishonored check is three hundred dollars ($300.00) or more, or five percent (5%) of the face value of such dishonored check or draft, whichever is greater, plus liquidated damages imposed by law. Further, in such event, the Department may require that future payments required pursuant to this Agreement be made by cashier's checks or other means acceptable to the Department.

3.17 ADDRESS FOR PAYMENTS: The Concessionaire shall pay all monies payable and identify the Lease and Concession Agreement for which payment is made, as required by this Agreement, to the following:

In Person: Miami-Dade Aviation Department
Finance Division
4200 N.W. 36th Street
Building 5A, Suite 300

During normal business hours, 8:30 A.M. to 5:00 P.M., Monday through Friday

By Mail: Miami-Dade Aviation Department
Finance Division
P.O. Box 526624
Miami, Florida 33152-6624

By Express Mail: Miami-Dade Aviation Department
Finance Division
4200 N.W. 36th Street
Building 5A, Suite 300
Miami, Florida 33122

By Wire Transfer: In accordance with Wire Transfer instructions provided by MDAD's Finance Division, 305-876-7383.

3.18 REVENUE CONTROL PROCEDURES: Notwithstanding anything to the contrary contained herein, the Concessionaire shall comply with such revenue control procedures as may be established from time to time by the Department. The Department shall provide the Concessionaire with at least thirty (30) Days prior written notice together with a copy of such revenue control procedures prior to requiring the Concessionaire to implement any such revenue control procedures.

3.19 ANNUAL AUDIT: Within ninety (90) Days of each anniversary of the Lease Effective Date of this Agreement and within ninety (90) Days following expiration or earlier termination of this Agreement, the Concessionaire shall, at its sole cost and expense, provide to the Department on an annual basis, an audited report of monthly Gross Revenues and percentage fees separately stating its Gross Revenues, containing an opinion, prepared and attested to by an independent certified public accounting firm, licensed in the State of Florida. The audited report, as detailed in Exhibit G "Independent Auditor Report", shall include a schedule of monthly Gross Revenues and percentage fees paid to the Department under this Agreement, prepared in accordance with Generally Accepted Auditing Standards. The report shall also be accompanied by a management letter containing the findings discovered during the course of the examination, recommendations to improve accounting procedures, revenue and internal controls, as well as significant matters under this Agreement. In addition, the audit shall also include as a separate report, a comprehensive compliance review of procedures to determine whether the books of accounts, records and reports were kept in accordance with the terms of this Agreement for the period of examination. Each audit and examination shall cover the period of this Agreement. The last such report shall include the last day of operation. There shall be no changes in the scope of the reports and letters required hereunder without the specific prior written approval of the Department.

3.20 RIGHT TO AUDIT/INSPECT: The Department and the auditors of the County shall have the right, without limitation, at any time during normal working hours, to enter into any location on or off the Airport, which the Concessionaire may use as administrative, maintenance and operational locations, in connection with its operations pursuant to this Agreement, to: (1) verify, check and record data used in connection with operation of this Agreement; (2) inspect, review, verify and check all or any portion(s) of the procedures of the Concessionaire for recording or compiling Gross Revenues information and (3) audit, check, inspect and review all books of account, records, financial reports, financial statements, operating statements, inventory records, and state sales tax returns, and work papers relating to operation of this Agreement, and other pertinent information as may be determined to be needed or desirable by the Department. Prior to entering the Location located on the Airport, the Department shall give advance notice to the Concessionaire.

If it is established that the percentage fees have been underpaid to the Department, the Concessionaire shall forthwith, pay the difference with interest thereon at the rate set forth in **Sub-Article 3.15, Late Payment**, from the date such amount or amounts should have been paid.

32

Further, if such examination establishes that Concessionaire has underpaid percentage fees for any period examined by three percent (3%) or more, then the entire expense of such examination shall be borne by Concessionaire.

In the event of any conflict between any provisions of this Agreement and generally accepted accounting principles or generally accepted auditing standards, the provisions of this Agreement shall control even where this Agreement references such principles or standards. In particular, without limitation, the Concessionaire shall maintain all records required under this Agreement to the full extent required hereunder, even if some or all of such records would not be required under such general principals or standards.

3.21 **RECORDS AND REPORTS:** The Concessionaire shall, at all times during the Term of this Agreement, or any Extension hereof, hereof and in accordance with applicable law, maintain at the Concessionaire's principal corporate office located in the United States and make available to the Department in Miami-Dade County, Florida, complete and accurate books and records of all receipts and disbursements from its operations on the Location, in a form consistent with good accounting practice. In addition, Concessionaire shall install or cause to be installed for use at all times in the Location such devices and forms as are reasonably necessary to record properly, accurately and completely all merchandise sales and services from the Location. The form of all such books of account records and reports shall be subject to the approval of the Department and/or the auditors of the County (one or more of the following: the designated external auditing firm or other certified public accounting firm selected by the Department, or the Audit and Management Services Department of the County) prior to commencement of operations hereunder.

The Concessionaire shall account for all revenues of any nature related to transactions in connection with this Agreement in a manner which segregates in detail those transactions from other transactions of the Concessionaire and which supports the amounts reported to the Department in the Concessionaire's monthly schedules. At a minimum, the Concessionaire's accounting for such receipts shall include the following:

1. Concessionaire's bank account statements;
2. A compiled report of transactions by Location showing all Gross Revenues and all exclusions from Gross Revenues by category, which report shall be subtotaled by day and totaled by month. The monthly total shall correspond with the amounts reported to the Department on the Concessionaire's monthly "Revenue Reports"; and
3. Such other records, if any, which would normally be examined by an independent certified public accountant in performing an examination of the Concessionaire's Gross Revenues in accordance with generally accepted auditing standards and the provisions of this Agreement.

   Such records may be in the form of (a) electronic media compatible with the computers available to the Department, or (b) a computer run hard copy. The Department may

require other records necessary in its determination to enable the accurate audit of Concessionaire's Gross Revenues hereunder. Upon ten (10) business days written notice from the Department, all such books and records, including the general ledger and bank statements and all federal, state and local tax returns sales, shall be made available, either at the Location, or at the Department's option, at the offices of the Department, for inspection by Department through its duly authorized representatives at any time for up to three (3) years subsequent to final termination of the period to be examined to which such books and records relate (and the Concessionaire shall not be obligated to retain such books and records subsequent to the termination of such three (3) year period); provided, however, that any such inspection on the Location will be conducted during reasonable business hours and in such a manner and at such time as not to interfere unduly with the conduct of the Concessionaire's business.

3.22 ADDITIONAL FEES DUE: If the Department has paid any sum or has incurred any obligation or expense for which the Concessionaire agreed to pay or reimburse the Department, or if the Department is required or elects to pay any sum or incur any obligation or expense because of the failure, neglect or refusal of the Concessionaire to perform or fulfill any of the terms or conditions of this Agreement, then the same shall be deemed due and subject to an additional administrative fee of twenty-five percent (25%) of such payment, obligation, or expense.

3.23 UTILITIES: The cost of all utilities used or consumed on the Location shall be borne by the Concessionaire; provided, however, except with respect to the Concessionaire's support and storage space as defined in **Sub-Articles 1.04 Support Space"** and **1.05 "Storage Space"** at the Airport, The Department requires the Concessionaire where such capability exist, to provide and install meters for utilities used at the Concessionaire's expense. If the Location is not provided with separate electric, gas, and/or water meters, the Concessionaire agrees to pay for such utilities in the Location as a monthly charge, plus any applicable taxes, upon billing by the Department, or utility companies. If billed by the Department, the Department at its sole discretion, will base this monthly charge on (i) a survey of consumption by the Department and current non-discriminatory rates charged others in the Terminal Building or (ii) at the option and expense of the Concessionaire on actual usage measured by temporary meters, arranged and paid for by the Concessionaire. This monthly charge may also be adjusted on a non-discriminatory basis and billed retroactively from time to time based on changes in consumption and rates. Concessionaire hereby agrees to pay the same within thirty (30) Days after it has received Department's invoice thereof. The Concessionaire shall pay for all other utilities used by it including telephones and telephone service hook-up, data lines and additional electrical and communications services required.

3.24 LIQUIDATED DAMAGES: If the Concessionaire is at fault under any of the covenants or terms and conditions of this Agreement, the Department shall impose the financial liquidated damages described below, as a result of the violation(s), on a daily basis, in

addition to any other liquidated damages permissible by law and/or pursuant to the provisions of this Agreement, until said violations are remedied:

Violation	Fee
Violation of Permitted Use of a Location	$ 100 per Day/per Location
Failure to Maintain Required Hours of Operation	$ 25 per hour/per Location
Failure to Submit Required Documents and Reports	$ 50 per Day/per Location
Unauthorized Advertising	$ 50 per Day/per Location
Failure to Maintain Location Clean	$ 50 per Day/per Location
Failure to Maintain Market Basket Pricing or to conduct the surveys as required	$ 50 per Day/per Location
Installation of Unapproved Items in Location	$ 50 per Day/per Location
Violations of Other Terms and Conditions	$ 75 per Day/per Location

The foregoing is due and payable from the Concessionaire; on a daily basis, in addition to any other liquidated damages permissible by law and/or pursuant to the provisions of the Lease agreements, until said violations are remedied.

3.25 PAYMENT SECURITY: The Concessionaire shall provide the County with an irrevocable standby letter of credit in the format approved by the Department or cash for the payments required by this Sub-Article in an initial amount equal to twenty-five percent (25%) of the MAG amount provided for in **Sub-Article 3.01, Minimum Annual Guarantee** and twenty-five percent (25%) of any annual rental for the lease of support and storage spaces set forth in **Sub-Article 3.06, Annual Rental** and any applicable taxes. Thereafter the amount shall be adjusted as necessary to reflect any increases in the MAG and lease of support and storage spaces. This requirement shall be met no later than thirty (30) Days after the Lease Effective Date of this Agreement. The payment security shall be kept in full force throughout Term and any Extension of this Agreement thereof. The Department may draw upon such payment security instrument if the Concessionaire fails to make the payments secured by this Sub-Article. Upon notice of any such draw, Concessionaire shall immediately replace the payment security with a new payment security in the full amount of the payment security required hereunder. A failure to renew the payment security, or increase the amount of the payment security, if required pursuant hereto, shall (i) entitle the Department to draw down the full amount of such payment security, and (ii) be a default of this Agreement entitling Department to all available remedies."

ARTICLE 4 – IMPROVEMENTS TO THE LOCATION

4.01 IMPROVEMENTS TO LOCATION: The Concessionaire shall be required to invest a minimum of two hundred twenty dollars per square foot ($220.00 psf), for Approved Improvements for the design, construction, furniture, fixtures and equipment excluding interior signage and inventory for the Location listed in Exhibit A and any additional

location taken by the Concessionaire pursuant to **Sub-Article 1.07(A), Addition of Location**. Notwithstanding the actual amount of design and engineering costs incurred with respect to improvements for the Location, the maximum proportion of soft costs permitted to be included as Approved Improvements shall be no more than fifteen percent (15%) of the total design and engineering cost. All improvements shall be subject to review and approval by the Department. The Department may, with mutual agreement, fund certain improvements needed to support the concession space and allow the Concessionaire to build such improvements in compliance with MDAD TAC procedures.

It is the intent of the parties that Approved Improvements may include but are not limited to the décor, remodeling of the wall and floor coverings, ceiling, lighting, millwork, HVAC, fire detection and fire suppression or such other improvements as are approved by the Department. Such improvements shall be shown in the design detail in the Final Plans, as such term is defined in **Sub-Article 4.02, Design of Improvements**.

Improvements not constituting Approved Improvements shall include improvements that (i) are non-fixed, (ii) have not been reimbursed by the Department pursuant to **Sub-Article 4.09, Cost Documentation**, and (iii) can be removed without damage to the premises. The Concessionaire is liable and shall indemnify the Department for any damage to the Location which results from the removal of said improvements. This provision shall survive the termination or expiration of this Agreement.

Off-Airport properties used as storage space will not be considered as a location, as stated in **Article 4, Improvements to the Location**, or as an extension of this Agreement, and costs incurred by either the Concessionaire to provide such storage space shall not constitute Approved Improvements.

4.02 DESIGN OF IMPROVEMENTS: Plans for the design of improvements will be in accordance with Exhibit E "Retail Concessions Design Guidelines", Exhibit F "Tenant Airport Construction Non-Reimbursable Projects (TAC-N) Design and Construction Procedures" or Exhibit F "Tenant Airport Construction Reimbursable Projects (TAC-R) Design and Construction Procedures", as applicable, the "MDAD Life Safety Master Plan" and the "MDAD Design Guidelines Manual" (www.Miami-Airport.com) as may be established for the Terminal Retail Program. As plans for the improvement the Location or common area improvements are completed, the Concessionaire shall submit to the Department for review, approval or modification detailed final plans ("Final Plans") and specifications (including materials, colors, textures and fixtures), construction cost estimates and schedules for the construction of the improvements. The Final Plans shall be prepared by an architectural interior design and/or engineering firm registered in the State of Florida and in accordance with the Florida Building Code and all applicable State and local laws, ordinances, and regulations.

4.03 REFURBISHMENT OF LOCATION: The Concessionaire shall refurbish the Location to begin no earlier than the sixth (6th) Term year of the Agreement and be completed no later than the last day of the sixth (6th) Term year of this Agreement.

Approved Improvements for the refurbishment of the Location shall not be less than fifty dollars per square foot ($50 psf). There will be no reimbursement or amortization of these costs for refurbishment.

4.04 NOT USED

4.05 CERTAIN CONSTRUCTION CONTRACT TERMS: All contracts entered into by the Concessionaire for the construction of the Improvements shall require completion of the improvements within the schedules submitted pursuant to **Sub-Article 4.02, Design of Improvements**, and shall contain reasonable and lawful provisions for the payment of actual or liquidated damages to the Department in the event the contractor fails to complete the construction on time.

Prior to the commencement of any installation work by the Concessionaire, the Concessionaire shall provide or cause to be provided to the Department copies of a fixed price contract or contracts for all work to be performed at the Location. The work to be performed under such contract(s) shall be insured by an Exhibit B, "Performance and Payment Bond" provided by Concessionaire to the Department in the form contained in Exhibit B "Performance and Payment Bond" in the Lease and Concession Agreement. The Performance and Payment bond shall be in full force throughout the term of the installation contract.

4.06 IMPROVEMENTS FREE AND CLEAR: The improvements, upon completion, shall immediately become the property of the Department, free and clear of any liens or encumbrances whatsoever, other than the Department's obligation to reimburse the Concessionaire for the un-amortized value of the Approved Improvements as provided in this Agreement. The Concessionaire agrees that any contract for construction, alteration or repairing of the improvements or the Location or for the purchase of material to be used, or for work and labor to be performed, shall be in writing and shall contain provisions to protect the Department from the claims of any laborers, subcontractors or material men against the Location or improvements.

4.07 OTHER REQUIREMENTS: The Concessionaire shall apply for and obtain a building permit from the Department for all appropriate inspections and a Certificate of Occupancy upon completion. Within sixty (60) Days following the completion of construction provided the Concessionaire does not disseminate such information, refer to Transportation Security Regulations (TSR), 49 C.F.R. 1520, et al., Protection of Sensitive Security Information.

No Facility will be allowed to open without obtaining a Temporary Certificate of Occupancy or a Certificate of Occupancy.

Any change in the Location, concept or tenant proposed in response to the Request for Proposals must be approved in writing by the Department

4.08 REVIEW OF CONSTRUCTION: The Department shall have the right, but not obligation, to periodically observe the construction to ensure conformity with the Final Plans and any changes thereof requested by the Concessionaire and approved by the Department.

4.09 COST DOCUMENTATION: Within one hundred eighty (180) Days from the date of Beneficial Occupancy, specifically including those improvements described in **Sub-Articles 4.01, Improvements to Location,** and **4.03, Refurbishment of Location.** the Concessionaire shall submit to the Department a certified audit of the monies actually expended in the design and construction of the Approved Improvements by Location in accordance with the Final Plans, prepared by an independent certified public accounting firm ("Auditor"), approved in advance by the Department (the "Certified Audit"). The Concessionaire, shall be responsible for documenting for the Auditor that the monies that were expended are true and correct. The costs of design and construction, in accordance with the Final Plans and any changes thereto requested by the Concessionaire and approved by the Department, including the costs of required bonds, construction insurance and the construction audit, shall not include the cost of any other consultant or accountant fees, financing or legal fees and personal property of the Concessionaire. No non-receipted expenditures will be credited. Concessionaires not submitting certified audits within the allotted time may be billed a liquidated damage of fifty dollars ($50.00) per Day. Upon reconciliation, any difference due the Department shall also include an administrative fee of ten percent (10%) of the monies due the Department on the build-out of the Location. In the event of any disputes between the Department and the Concessionaire as to whether certain costs are to be included in the audit, said dispute shall be submitted to the consulting engineer named pursuant to the Trust Agreement, as defined in **Sub-Article 17.01, Incorporation of Trust Agreement by Reference**. The decision of said consulting engineer, acting in good faith, shall be final and binding upon the parties hereto.

The Department shall notify the Concessionaire in writing that it has approved or disapproved the certified costs for the Location and the common area improvements detailed in the Certified Audit within sixty (60) Days from the date of its receipt of the Certified Audit. If the Concessionaire fails to submit the Certified Audit within the time prescribed above for the Location, then a liquidated damage will be assessed as noted in **Sub-Article 3.24, Liquidated Damages**. The Approved Improvement cost for purposes of calculating the County's obligation to reimburse the Concessionaire for un-amortized improvement costs for such Location pursuant to **Sub-Article 4.10, Amortization Schedule**, shall equal the lesser of two hundred twenty ($220) per square foot or the square footage rate of improvement costs for such Location certified by the Auditor.

38

If the approved total receipted amount is below the Concessionaire minimum investment and is depicted as such in the results of the Certified Audit, the Concessionaire shall be required to pay to the Department the difference between the expended amount and the minimum investment, within one hundred eighty (180) Days from the date of Beneficial Occupancy of the corresponding Location.

If the approved total receipted amount for Refurbishment of the Location is below the Concessionaire's investment, the Concessionaire shall be required to pay the Department the difference between the expended amount and the refurbishment amount within one hundred eighty (180) Days from the date of completion of refurbishment.

4.10 AMORTIZATION SCHEDULE: The Concessionaire shall amortize its capital investment for a period not to exceed (60) months using the straight-line depreciation method. If, at any time during the Term of the Agreement, excluding any extension, the Department requires the deletion and/or modification of the Location, the Department may designate a new location at its sole discretion and reimburse the Concessionaire the unamortized balance of Approved Improvements for the deleted or modified location.

Investment subject to such reimbursement shall include the following items only:

1. Directly contracted costs of construction.
2. Stores displays more than $500 per display, furniture, fixture, equipment and signage purchased and installed for direct use in the facility.
3. Design and engineering costs not to exceed fifteen percent (15%) of the total approved construction, installation, store displays, furniture, fixture, equipment and signage cost.

There will be no other reimbursement.

A certified audit of monies for the above expenditures performed at the expense of the Concessionaire will be required to confirm the minimum investment within one hundred twenty (120) Days of Beneficial Occupancy for the Location. No non-receipted expenditures will be credited. If the approved total receipted amount is below the $220/psf minimum investment, the Concessionaire will be required to pay the Department the difference between the minimum investment amount and the actual receipted expenditure within ninety (90) Days after billing by the Department.

Concessionaires not submitting a certified audit within the allotted time may be billed a liquidated damage of fifty dollars ($50.00) per Day. Upon reconciliation, any difference due the Department shall also include an administrative fee of twenty-five percent (25%) of the monies due the Department on the build-out of the Location.

Prior to the commencement of any construction installation or work by the Concessionaire, the Concessionaire shall provide or cause to be provided to the Department copies of a fixed price contract or contracts for all work to be performed at the Location. The work to be performed under such contract(s) shall be insured by a Performance and Payment Bond provided by Concessionaire to the Department in the form contained in Exhibit B "Performance and Payment Bond" in the Agreement. The Performance and Payment Bond shall be in full force throughout the term of the installation / construction contract.

4.11 CONSTRUCTION PERMIT FEE: The Concessionaire shall pay a permit fee to the Department for improvements which would customarily be paid to the County's Building Department as a condition to issuance of a permit. The permit fee is payable by the Concessionaire to the Department within ten (10) days of the issuance of the Building Permit is equal to one per cent (1%) of the estimated construction cost of the improvements. Such fee shall be used to reimburse the Department its costs of maintaining on-site Building Department staff to review Concessionaire's plans/specifications. Such fee shall be non-refundable.

4.12 CONSTRUCTION SERVICES: The Concessionaire shall provide at a minimum, but not limited to, the following design and construction services:

1) Concessionaire Improvements

Pursuant to the terms of this Agreement, the Concessionaire shall construct or cause to be constructed certain improvements. The Department shall provide the Concessionaire with the scope of such improvements and within a reasonable time period to be mutually agreed to by the Concessionaire and the Department, the Concessionaire shall provide the Department with a preliminary estimate of hard and soft costs for such improvements. Once the Department and the Concessionaire have mutually agreed on the scope of the improvements and the preliminary estimates, the Concessionaire shall proceed to design and construct the improvements in accordance with the provisions of this Agreement.

2) Design and Construction Coordination

a. Concessionaire shall:

1. Be responsible for construction management and coordination of all improvements to the Location and authorized administrative support space.
2. Coordinate the processing and review of improvement submittals. Design and construction shall be in accordance with the MDAD Design Guidelines Manual, Life Safety Master Plan, MDAD Retail Concessions Design Guidelines, Florida Building Code and the TAC-N or TAC-R Procedures, as well as all other applicable codes and regulations.
4. Provide and coordinate access to Location as necessary.

5. Purchase materials and services, and coordinate the fabrication and installation of the Concessionaire development requirement, whereby such elements are the designated responsibility of the Concessionaire, if so implemented.

3) Construction

Concessionaire shall:

1. Attend pre-construction meetings, construction meetings, coordinate construction with, monitor schedule, and coordinate the Location's development with the Department as required, pursuant to the TAC-N procedures.
2. Adhere to MDAD's TAC-N or TAC-R Design and Construction procedures and requirements.
3. Ascertain that MDAD's TAC-N or TAC-R Design and Construction procedures and requirements, as applicable, are adhered to by all.
4. Monitor and coordinate the construction start, project timetable schedule and completion date for the Location.
5. Monitor and report to the Department on on-site activities and progress for improvement work. The Architect/Engineer of record is responsible for day-to-day field observation of all construction activities including, but not limited to inspections, delivery, coordination and reporting.
6. Monitor construction progress with regard to the schedule and procedures established and make recommendations to the Department for maintaining and improving construction progress as necessary.
7. Establish a uniform system for the timely processing and control of drawings.
8. Review status of drawings with contractor(s) and architect(s) at progress meetings.
9. Review and advise the Department on all changes to the work with regard to cost and impact on the project pro-forma and construction schedule.
10. Monitor punch list completion and review testing and inspection reports for the Location.
11. Organize and have available upon request completed project files.
12. Coordinate access to the Location to allow staff training and equipment testing.
13. Obtain Certificate of Occupancy for the Location.
14. Submit Record Drawings (as-built drawings) as per the TAC-N or TAC-R requirements within sixty (60) Days from the issuance date of the Certificate of Occupancy, and deliver them to the Department pursuant to the TAC-N or TAC-R procedures.

ARTICLE 5 – STANDARDS OF OPERATION

5.01 STANDARDS OF OPERATION: The Concessionaire shall comply with the Department's "Commercial Operations Tenant Handbook", Exhibit K; the "Standards of Operations", Exhibit L, the "Standards of Operation " available on **www.miami-airport.com,** and all revisions to same promulgated from time to time by the Department.

The Department shall have the right to adopt and enforce reasonable and non-discriminatory rules and regulations and operating performance standards with respect to the use of the Location, which the Concessionaire agrees to observe and obey. The Department may amend such rules or regulations and operating performance standards from time to time and shall provide copies thereof to the Concessionaire. The Department shall provide the Concessionaire with reasonable prior written notice, not less than thirty (30) Days, prior to the implementation of any such amendment to the rules or regulations and operating performance standards. Those rules include, but are not limited to, any rules and regulations imposed upon the Department by any governmental agency.

The Concessionaire shall implement and comply with all amended requirements, within fifteen (15) Days of receipt of an amendment to Exhibit L "Standards of Operation". The Concessionaire shall immediately implement and comply with any rules and regulations promulgated for safety or security reasons.

The Concessionaire acknowledges the desire of the Department, as part of its obligation to ensure the highest level of public service, to provide the public and air traveler an adequate range and quality of service. The Department may monitor, test or inspect the Location at any time through the use of its own personnel, and/or the use of a shopping service, and/or by any other reasonable means that do not unduly interfere with the operation of the business. The results of such service audits may be employed by the Department to enforce the obligations in this Agreement.

The Department shall retain the right, in accordance with the provisions of this Agreement, to make reasonable objections to the quality of articles sold, the character of the service rendered to the public, the prices charged, and the appearance and condition of the Location, pursuant to Exhibit L "Standards of Operation", as may be amended from time to time.

5.02 MARKET BASKET PRICING POLICY: The Department has instituted a Market Basket pricing policy to ensure that Airport prices are comparable to retail in the Miami Dade County, Florida area to reinforce the objective of making the Airport a more "passenger friendly" airport, pursuant to Exhibit L "Standards of Operation."

The Concessionaire who is not in compliance with the provisions of this Sub-Article shall be given seven (7) Days after notice of such non-compliance pursuant to **Sub-Article 18.09 Notices** to bring all products into compliance. Failure to do so shall

subject the Concessionaire to liquidated damages pursuant to **Sub-Article 3.24, Liquidated Damages**, and shall constitute a default under this Agreement.

ARTICLE 6 – OBLIGATIONS OF THE DEPARTMENT

6.01 DEPARTMENT SERVICES:

A. Department's Maintenance Obligation: The Department shall clean, maintain and operate in good condition the terminal building, excluding the Location. This obligation includes, but is not limited to, all structural (including, but not limited to, the roof and base floor of the terminal building) and all base building work, maintenance of main electrical and mechanical systems, maintenance of walls and ceilings, and repair/maintenance of the roof. The Department shall maintain the public areas in the terminal building furnished and will provide adequate light, cold water and conditioned air. The Department agrees to make all necessary structural repairs to the Location at its own expense; provided, however, that for purposes of this Agreement such structural repairs shall not include any repairs to any equipment installed by the Concessionaire, and further provided that the Concessionaire shall reimburse the Department, within ten (10) Days of receipt of written demand for such reimbursement, for the cost and expense of all structural repairs required as a result of the negligent or intentional acts of the Concessionaire, its officers, partners, employees, agents, contractors, subcontractors, licensees, or invitees. The Concessionaire shall give the Department written notice (or verbal notice in the event of any emergency conditions which may result in harm to the patrons of the Airport, which verbal notice shall be followed by written notice within twenty-four (24) hours) describing any repair, which is the responsibility of the Department. The Department shall commence the repair process promptly after its receipt of such written notice if the Department agrees that such repair is required and is the Department's responsibility hereunder.

B. The Concessionaire must ascertain the extent of the existing utility capacities, before designing any new loads to be connected to existing systems and piping. The Department agrees to cooperate in providing access to the Location.

Such maintenance by the Department may be subject to interruption caused by repair, strikes, lockouts, labor controversies, inability to obtain fuel, power or parts, accidents, breakdowns, catastrophes, national or local emergencies, and other conditions beyond the control of the Department. If the Concessionaire's Location is of such a condition as to significantly impact the Concessionaire's operations for a period in excess of seventy two (72) hours and such damage is not insurable under an insurance policy of the type required to be maintained by the Concessionaire pursuant to this Agreement or license agreement, the Department may provide a rent abatement for that portion of the Location rendered unusable for that period of time that the Department is unable to make repairs required by **Sub-Article 6.01, Department Services.**

C. No Other Obligation of Department: The Concessionaire acknowledges that the Department has made no representations or warranties concerning the suitability of the Location for the Concessionaire's use or for any other use, and that except as expressly provided in this Agreement, the Department shall have no obligations whatsoever to repair, maintain, renovate or otherwise incur any cost or expense with respect to the Location or any improvements, furnishings, fixtures, trade fixtures, signage or equipment constructed or used on or in the Location by the Concessionaire.

1. The Concessionaire hereby confirms that it has made its own investigation of all the costs of doing business under this Agreement, including the costs of furnishings, fixtures, trade fixtures, inventory, signs and equipment needed to operate from the Location hereunder, that it has done its own projections of the volume of business expected to be generated, that it is relying on its own business judgment concerning its prospects for providing the services required under this Agreement on a profitable basis, and that the Department has not made any representations or warranties with respect to any such matters.

2. The Department does not warrant the accuracy of any statistics or projections relating to the Airport and its operations, which have been provided to the Concessionaire by the Department or anyone on its behalf and the Department shall not be responsible for any inaccuracies in such statistics or their interpretation.

3. All statements contained in this Agreement or otherwise made by the Department or anyone on its behalf concerning any measurement relating to the Location or any other area of the Airport are approximate only, and any inaccuracy in such statements of measurements shall not give rise to any claim by the Concessionaire under or in connection with this Agreement.

4. The Department shall not be liable to the Concessionaire for any loss of business or damages sustained by the Concessionaire as a result of any change in the operation or configuration of, or any change in any procedure governing the use of, the construction improvements of the terminal building.

ARTICLE 7–FURNITURE, FIXTURES AND EQUIPMENT

7.01 FURNITURE, FIXTURES, AND EQUIPMENT: Any equipment, furnishings, fixtures and signs installed in the Location by the Concessionaire shall be in keeping with the decor of the terminal building and must be approved in advance by the Department. Any such equipment, furnishings, fixtures and signs so installed by the Concessionaire as provided in **Sub-Article 4.01, Improvements to Location**, shall, except as provided in **Sub-Article 7.03(B), Disposal of Furniture, Fixtures, and Equipment**, be removed from the Location within five (5) Days following the expiration or earlier termination of this Agreement.

7.02 AMERICANS WITH DISABILITIES ACT REQUIREMENTS: The Concessionaire will be responsible, at its cost, for ensuring that the Location and all equipment therein, and all functions it performs therein as part of the concession, conform in all respects to the requirements of the Americans with Disabilities Act (the "ADA"), including without limitation, the accessibility guidelines promulgated pursuant thereto. The ADA imposes obligation on both public entities, like the Department and those private entities that offer services for the convenience of users of the public entities' Location. In some circumstances, the public entity must ensure that the operations of the private entity comply with the public entity's ADA obligations. In most cases the ADA obligations of the Department and the Concessionaire will be the same. However, the Department reserves the right to require the Concessionaire to modify its operations or its physical Location to comply with the Department's ADA obligations with respect to the Location, as the Department in its sole discretion deems reasonably necessary.

7.03 DISPOSAL OF FURNITURE, FIXTURES, AND EQUIPMENT: At least thirty (30) Days prior to the expiration of this Agreement, or upon termination pursuant to **Article 12, Default and Termination by County**, or **Article 13, Claims and Termination by Concessionaire**, hereof, the Department shall exercise, at its sole discretion, one (1) of the following options as to any equipment, furnishings, fixtures, signs, or carts installed in the Location by the Concessionaire:

(A) Require the Concessionaire to remove such equipment, furnishings, fixtures, signs, or carts from the Location within five (5) Days following the expiration or earlier termination of this Agreement, subject to the provisions of **Sub-Article 4.01, Improvements to Location**; or

(B) Retain any portion of the equipment, furnishings, fixtures, signs, or carts of the Concessionaire (personal property as referred to in **Sub-Article 4.01, Improvements to Location**;) in accordance with the provisions of this Agreement; provided however, the Department shall have no right to use or display any proprietary signs or logos (e.g., brand names owned by, or licensed or franchised to Concessionaire).

ARTICLE 8 – MAINTENANCE

8.01 CLEANING: The Concessionaire shall, at its cost and expense, keep the Location clean, neat, orderly, sanitary and presentable at all times. If the Location are not kept clean as provided in the Exhibit L, "Standards of Operation", the Concessionaire will be so advised and shall take immediate corrective action. Failure to take immediate corrective action may result in liquidated damages being assessed pursuant to **Sub-Article 3.24, Liquidated Damages.**

8.02 REMOVAL OF TRASH: The Concessionaire shall, at its cost and expense, remove or cause to be removed from the Location and properly disposed of in Department provided

containers, all trash and refuse of any nature whatsoever which might accumulate and arise from the operations hereunder. If the Concessionaire enters into agreements for the janitorial and trash removal service within the Location, such service providers must have permits issued by the Department to do business at the Airport. Trash shall not be stored in any area visible to the public nor cause a private or public hazard through its means of storage. All edible items must be contained so as to minimize exposure to pests. Any trash left or stored in any area visible to the public or edible items not properly contained may result in Liquidated Damages being assessed pursuant to **Sub-Article 3.24, Liquidated Damages**.

The Department reserves the right to charge the Concessionaire retroactively non-discriminatory proportionate share for waste disposal which may be imposed either indirectly through rental rates or directly by a Department generated bill for actual usage. Such charges shall not exceed the Department's actual costs.

8.03 MAINTENANCE AND REPAIR: Except with respect to the Department's maintenance and repair obligations as set forth in **Sub-Article 6.01, Department Services**, the Concessionaire shall maintain and repair or cause to be maintained and repaired the interiors and exterior storefronts of the Location. Such maintenance and repairs shall include, but not be limited to, painting, ceiling, walls, floors, laminating doors, windows, equipment, furnishings, fixtures, appurtenances, replacement of ceiling light bulbs, ballast and the replacement of all broken glass, which repairs shall be in quality and class equal to or better than the original work to preserve the same in good order and condition. Maintenance for all equipment furnished by the Concessionaire specifically as a result of their operation shall remain the obligation of the Concessionaire. The Concessionaire shall repair or cause to be repaired, at or before the end of the Term or Extension, if applicable, of this Agreement, all injury done by the installation or removal of furniture and personal property so as to restore the Location to the state they were at the commencement of this Agreement, reasonable wear and tear excluded. The Department may, at any time during normal business hours, enter upon the public areas of the Location, or with appropriate notice, enter upon the non-public areas of the Location, to determine if maintenance is being performed satisfactorily. The Department may enter the Location when the Location is not open for business if the Department provides the Concessionaire notice no less than two (2) hours in advance so that a representative of the Concessionaire may be present, except in the case of real or perceived emergencies where no such representatives shall be required to be present. If it is determined that said maintenance is not satisfactory, the Department shall so notify Concessionaire in writing. If said maintenance is not performed by Concessionaire to the satisfaction of the Department within seven (7) Days after receipt of such written notice, Department shall have the right to enter the Location and perform such maintenance and charge Concessionaire for such services, as provided by **Sub-Article 8.04**.

8.04 FAILURE TO MAINTAIN: Upon failure of the Concessionaire to maintain the Location as provided in this Article 8, Maintenance, the Department may enter upon the

Location and perform all cleaning, maintenance and repairs which may be necessary and the cost thereof plus twenty-five percent (25%) for administrative costs, shall constitute additional rental, and shall be billed to and paid by the Concessionaire, in addition to any liquidated damages imposed by the Department pursuant to **Sub-Article 3.24, Liquidated Damages.**

Failure to pay said costs upon billing by the Department will cause this Agreement to be in default as stated in **Sub-Article 12.02, Payment Default**.

8.05 ENVIRONMENTAL RECYCLING: The Department is actively engaging in the development of environmental programs. A recycling program is planned at the Airport to include the participation of all Airport Concessionaires. Participation in this program, once established, will be mandatory. The Concessionaire shall agree to bear any reasonable and actual costs associated with the implementation and continued operation of this recycling program, or propose for approval by the Department an alternative environmental recycling plan which such approval shall not be unreasonably withheld.

Proper disposal of contaminated and/or regulated materials generated by the Concessionaire is the sole responsibility of the Concessionaire. Disposal must be through the use of a licensed vendor regulated by the State of Florida and/or any other federal or local regulatory agency.

8.06 FIRE PROTECTION AND SAFETY EQUIPMENT: The Concessionaire must provide and maintain all fire protection and safety equipment and all other equipment of every kind and nature required by any applicable law, rule, ordinance, resolution or regulation, for the Term and any Extension of this Agreement or any insurance carrier providing insurance covering any portion of the Location.

ARTICLE 9 – ASSIGNMENT AND OWNERSHIP

9.01 NO ASSIGNMENT: The Concessionaire shall not assign, transfer, pledge or otherwise encumber this Agreement nor shall the Concessionaire allow others to use the Location, without the prior written consent of the Department.

9.02 OWNERSHIP OF THE CONCESSIONAIRE: Since the ownership, control, and experience of the Concessionaire were material considerations to the County in the award of this concession and the entering into of this Agreement, the Concessionaire shall take no actions which shall serve to transfer or, sell majority ownership or control of the Concessionaire without the prior written consent of the Department.

9.03 CHANGE OF CONTROL: If Concessionaire is a corporation the issuance or sale, transfer or other disposition of a sufficient number of shares of stock (deemed to mean more than fifty percent (50%) of the stock) in the Concessionaire to result in a change of control of Concessionaire shall be deemed an assignment of this Agreement for purposes of this **Article 9, Assignment and Ownership**. If the Concessionaire is a partnership,

transfer of any interest in the partnership, which results in a change in control of such Concessionaire, shall be deemed an assignment of this Agreement for purposes of this **Article 9, Assignment and Ownership.**

9.04 HOLDOVER:

A. With the Department's Permission:

If the Concessionaire (or anyone claiming through Concessionaire) shall by written agreement executed by the Department, remain in possession of the Location, or of no less than seventy percent (70%) of the square footage of the Location, after the termination of this Agreement, the person or entity remaining in possession shall be deemed a tenant at sufferance otherwise subject to all of the provisions of this Agreement.

B. Without Department Permission:

If the Concessionaire (or anyone claiming through Concessionaire) shall remain in possession of the Location or any part thereof after the termination of this Agreement, without a written agreement executed by the Department, then without limiting the Department's other rights and remedies, the person or entity remaining in possession shall be deemed a tenant at sufferance otherwise subject to all of the provisions of this Agreement. The Concessionaire shall thereafter pay on account of its holdover use and occupancy of the Location a sum, at a rate equal to two times (2x) the amount payable monthly as MMG PLUS Percentage Fee PLUS monthly installment of the support space annual lease rental pursuant to **Sub-Article 3.06, Annual Rental**, and with all additional rent also payable as provided in this Agreement (the "Holdover Charges"). Imposition of Holdover Charges, extinguishes any un-amortized investment amounts owed the Concessionaire by the Department, for the slippage in Location turnover. The Holdover Charges shall be payable weekly in advance. Notwithstanding the above, the Concessionaire shall remain liable to the Department for all damages resulting from such breach, with the amount of any Holdover Charges accepted by the Department on account of the holdover considered as mitigation of such damages. The covenant in this Sub-Article shall survive the expiration or the termination of this Agreement.

ARTICLE 10 – INDEMNIFICATION

10.01 INDEMNIFICATION REQUIRED OF CONCESSIONAIRE: The Concessionaire shall indemnify, defend, and hold harmless the County and its officers, employees, agents and instrumentalities from any and all liability, losses or damages, including attorney's fees and cost of defense, which the County or its officers, employees, agents or instrumentalities may incur as a result of claims, demands, suits, causes of actions or proceedings of any kind or nature arising out of, relating to or resulting from the

performance of this Agreement by the Concessionaire or its employees, agents, servants, partners, principles or any other persons. The Concessionaire shall pay all claims and losses in connection therewith, and shall investigate and defend all claims, suits or actions of any kind or nature in the name of the County, where applicable, including appellate proceedings, and shall pay all costs, judgments, and attorney's fees which may issue thereon.

The Concessionaire expressly understands and agrees that any insurance protection required by this Agreement or otherwise provided by the Concessionaire shall in no way limit the responsibility to indemnify, keep and save harmless and defend the County or its officers, employees, agents and instrumentalities as herein provided.

ARTICLE 11 – INSURANCE

11.01 INSURANCE REQUIRED OF CONCESSIONAIRE: Prior to execution of this Agreement by the County and commencement of the Term of this Agreement, the Concessionaire shall obtain all insurance required under this Article and submit it to the Department, c/o Risk Management, P.O. Box 025504, Miami, Florida 33102-5504 for approval. All insurance shall be maintained throughout the Term and any Extension of this Agreement.

The limits for each type of insurance may be revised upon review and approval of the Concessionaire's operations. Additional types of insurance coverage or increased limits may be required if, upon review of the operations, the Department determines that such coverage is necessary or desirable.

Certificate(s) of insurance from the Concessionaire must show coverage has been obtained that meets the requirements as outlined below during the construction and operation phase of this Agreement:

A. Workers' Compensation as required by Chapter 440, Florida Statutes.

B. Commercial General Liability Insurance on a comprehensive basis including Contractual Liability, Broad Form Property Damage and Products and Completed Operations in an amount not less than $1,000,000 per occurrence for Bodily Injury and Property Damage combined. This policy shall include Miami-Dade County as an additional insured with respect to this coverage.

   The Commercial General Liability Insurance coverage shall include those classifications, as listed in Standard Liability Insurance Manuals, which are applicable to the operations of the Concessionaire in the performances of this Agreement.

C. Automobile Liability Insurance covering all owned, non-owned and hired vehicles used in connection with this Agreement in an amount not less than $500,000* per occurrence for Bodily Injury and Property Damage combined.

*Under no circumstances is the Concessionaire allowed on the Airside Operation Area (AOA) without increasing automobile coverage to $5,000,000 as approved by the Risk Management Office.

11.02 CERTIFICATE OF CONTINUITY: The Concessionaire shall be responsible for assuring that the insurance certificates required in conjunction with Article 11, Insurance, remain in force for the duration of this Agreement, including the Extension, if applicable. If insurance certificates are scheduled to expire during the lease period, the Concessionaire shall be responsible for submitting new or renewed insurance certificates to the Department's Risk Management Unit at a minimum of thirty (30) Days before such expiration.

Certificates will show that no modification or change in insurance shall be made without thirty (30) Days written advance notice to the certificate holder.

11.03 INSURANCE COMPANY RATING REQUIREMENTS: All insurance policies required above from the Concessionaire shall be issued by companies authorized to do business under the laws of the State of Florida, with the following qualifications:

The company must be rated no less than "A-" as to management, and no less than "Class VII" as to financial strength, according to the latest edition of Best's Insurance Guide, published by A.M. Best Company, Oldwick, New Jersey, or its equivalent, subject to the approval of the Department's Risk Management Office.

11.04 CONCESSIONAIRE LIABLE: Compliance with the requirements as to carrying insurance in **Article 11, Insurance**, shall not relieve the Concessionaire from liability under any other provision of this Agreement.

11.05 CANCELLATION OF INSURANCE OR BONDS: Cancellation of any insurance or bonds, or non-payment by the construction contractors of any premiums for any insurance policies or bonds required by this Agreement shall constitute a breach of this Agreement.

11.06 RIGHT TO EXAMINE: The Department reserves the right, upon reasonable notice and at the County's sole cost and expense, to examine the original policies of insurance of the Concessionaire (including but not limited to: binders, amendments, exclusions, endorsements, riders and applications) to determine the true extent of coverage. The Concessionaire agrees to permit such inspection at the offices of the Concessionaire. In addition, upon request (but no later than five (5) Days from the date of request, unless such longer period is agreed to by the Department) the Concessionaire agrees to provide copies to the Department, at the Concessionaire's sole cost and expense.

SO

11.07 PERSONAL PROPERTY: Any personal property of the Concessionaire or of others, placed in the Location and support/storage spaces shall be at the sole risk of the Concessionaire or the owners thereof, and the County shall not be liable for any loss or damage thereto, irrespective of the cause of such loss or damage.

11.08 SURVIVAL OF PROVISIONS: The provisions of **Article 11, Insurance**, shall survive the expiration or earlier termination of this Agreement.

11.09 NOT USED

11.10 INDEMNIFICATION, CONSTRUCTION BONDS AND INSURANCE REQUIRED:

A. Indemnification, Bonds and Insurance Required from Construction Contractor: The following language, including the indemnification clause, shall be included in all construction contracts between the Concessionaire and its general contractor(s) and subcontractors and shall also be included in all construction contracts between their respective general contractors and subcontractors:

Indemnification: The Contractor shall defend, indemnify, and save harmless the County, the Consulting Engineers, the Architect/Engineer, the Field Representative, the Lessee of the Location, and their officers (elected or otherwise), employees, and agents (collectively "Indemnitees"), from any and all claims, demands, liability, losses, expenses and causes of actions, arising from personal injury (including death), property damage (including loss of use thereof), economic loss, or any other loss or damage, due in any manner to the negligence, act, or failure to act of the Contractor or its contractors, subcontractors, sub-subcontractors, materialmen or agents of any tier or their respective, employees arising out of or relating to the performance of the work covered by the Contract Documents except as expressly limited herein. The Contractor shall pay all claims and losses of any nature whatsoever in connection therewith and shall defend all suits in the name of the County, when applicable, including appellate proceedings, and shall pay all costs and judgments which may issue thereon, provided however, that the Contractor's obligation to indemnify or hold harmless the Indemnitees for damages to persons or property caused in whole or in part by any act, omission, or default of any Indemnitee arising from the contract or its performance shall be limited to the greater of $1 million or the Contract Amount. Further, this indemnification requirement shall not be construed so as to require the Contractor to indemnify any of the above-listed Indemnities to the extent of such indemnities' own gross negligence, or willful, wanton, or intentional misconduct of the Indemnitee or its officers, directors, agents, or employees, or for statutory violation or punitive damages except and to the extent the statutory violation or punitive damages are caused in whole or in part by or result from the acts or omissions of the indemnitor or any of the indemnitor's contractors, subcontractors, sub-subcontractors, materialmen, or agents of any tier or their respective employees. This indemnification provision is in addition to and cumulative with any other right of indemnification or contribution which any Indemnitee may have in law, equity, or otherwise.

B. Surety Performance and Payment Bonds: Pursuant to and in accordance with Section 255.05, Florida Statutes, the Concessionaire or each contractor performing any part of the work for the Concessionaire shall obtain and thereafter at all times during the performance of the work maintain a combined performance bond and labor and material payment bond for the work (referred to herein as the "Bond") in an amount equal to one hundred percent (100%) of the cost of the improvements, as it may be amended from time to time, and in the form attached hereto as Exhibit "B", Performance and Payment Bond". Within ten (10) Days of issuance, Concessionaire shall record all bonds required by this Agreement in the Department of Public Records of Miami-Dade County. Prior to performing any portion of the Work, the Concessionaire shall deliver to County the Bonds required to be provided by Concessionaire or each contractor as set forth in this Agreement.

All bonds shall be written through surety insurers authorized to do business in the State of Florida as Surety, with the following qualifications as to management and financial strength according to the latest edition of Best's Insurance Guide, published by A.M. Best Company, Oldwick, New Jersey:

Bond (Total Contract) Amount	Best's Rating
$ 500,001 to $1,500,000	B V
1,500,001 to 2,500,000	A VI
2,500,001 to 5,000,000	A VII
5,000,000 to 10,000,000	A VIII
Over $10,000,000	A IX

For contracts of $500,000 or less, the bond provisions of Section 287.0935, Florida Statutes (1985) shall be in effect and surety companies not otherwise qualifying with this paragraph may optionally qualify by:

a) Providing evidence that the surety has twice the minimum surplus and capital required by the Florida Insurance Code at the time the Request for Proposals is issued.

b) Certifying that the surety is otherwise in compliance with the Florida Insurance Code, and

c) Providing a copy of the currently valid Certificate of Authority issued by the United States Department of Treasury under Section 31 U.S.C. 9304-9308.

d) Surety insurers shall be listed in the latest Circular 570 of the U.S. Department of the Treasury entitled "Surety Companies Acceptable on Federal Bonds", published annually. The bond amount shall not exceed the underwriting limitations as shown in this circular.

e) For contracts in excess of $500,000 the provision of this Sub-Article must be adhered to, plus the surety insurer must have been listed on the United States Treasury list for at least three (3) consecutive years, or currently hold a valid Certificate of Authority of at least 1.5 million dollars and listed on the Treasury list.

SA

f) Surety bonds guaranteed through U.S. Government Small Business Administration or Contractors Training and Development Inc. will also be acceptable.

g) The attorney-in-fact or other officer who signs a Exhibit B, "Performance and Payment Bond" for a surety company must file with such bond a certified copy of his/her power of attorney authorizing him/her to do so.

The required Bond shall be written by or through and shall be countersigned by, a licensed Florida agent of the surety insurer, pursuant to Section 624.425 of the Florida Statutes.

The Bond shall be delivered to the Department upon execution of the contract between the Concessionaire and its contractor.

C. **Insurance Required of Construction Contractor(s):** The limits for each type of insurance may be revised upon review and approval of the construction plans. Additional types of insurance coverage may be required if, upon review of the construction plans, the Department reasonably determines that such coverage is necessary or desirable.

The Concessionaire shall cause its contractor(s) to provide certificates of insurance and copies of original policies, if requested, which shall clearly indicate that the construction contractor has obtained insurance in the type, amount and classifications as required for strict compliance with this Sub-Article. Evidence of such coverage must be submitted prior to any construction:

(a) Workers' Compensation as required by Chapter 440, Florida Statutes.

(b) Commercial General Liability Insurance on a comprehensive basis including Contractual Liability, Broad Form Property Damage and Products and Completed Operations in an amount not less than $1,000,000 per occurrence for Bodily Injury and Property Damage combined. The County and the Concessionaire must be shown as an additional insured with respect to this coverage.

(c) Automobile Liability Insurance covering all owned, non-owned and hired vehicles used in connection with this Agreement in an amount not less than $500,000* per occurrence for Bodily Injury and Property Damage combined.

* Under no circumstances is the contractor allowed on the Airside Operation Area (AOA) without increasing automobile coverage to $5,000,000 as approved by the Safety and Insurance Office.

D. **Certificate Continuity:** The contractor(s) shall be responsible for assuring that the insurance certificates required in conjunction with this Sub-Article remain in force

throughout the performance of the contract and until the work has been accepted by the Concessionaire and approved by the Concessionaire and the Department. If insurance certificates are scheduled to expire during the contract period, the contractor(s) shall be responsible for submitting new or renewed insurance certificates to the Concessionaire at a minimum of thirty (30) Days before such expiration.

E. **Insurance Company Rating Requirements:** All insurance policies required above shall be issued by companies authorized to do business under the laws of the State of Florida, with the following qualifications:

The company must be rated no less than "A-" as to management, and no less than "Class VII" as to financial strength, according to the latest edition of Best's Insurance Guide, published by A.M. Best Company, Oldwick, New Jersey, or its equivalent, subject to the approval of the Concessionaire.

F. **Right to Examine:** The Department reserves the right, upon reasonable notice, to examine the original policies of insurance (including but not limited to: binders, amendments, exclusions, endorsements, riders and applications) to determine the true extent of coverage. The contractor shall be required by the Concessionaire to agree to permit such inspection at the offices of the Department.

G. **Personal Property:** Any personal property of the contractor, or of others, placed in the Location shall be at the sole risk of the contractor or the owners thereof, and the Department shall not be liable for any loss or damage thereto, irrespective of the cause of such loss or damage.

ARTICLE 12– DEFAULT AND TERMINATION BY COUNTY

12.01 EVENTS OF DEFAULT: A default shall mean a breach of this Agreement by the Concessionaire (an "Event of Default"). In addition to those defaults defined in **Sub-Article 12.02, Payment Default, Sub-Article 12.03, Other Defaults, and Sub-Article 12.04, Habitual Default**, an Event of Default, may also include one (1) or more of the following occurrences:

(A) The Concessionaire has violated the terms and conditions of this Agreement;

(B) The Concessionaire has failed to make prompt payment to subcontractors or suppliers for any service or work provided for the design, installation, operation, or maintenance of the advertising concessions;

(C) The Concessionaire has become insolvent (other than as interdicted by the bankruptcy laws), or has assigned the proceeds received for the benefit of the Concessionaire's creditors, or the Concessionaire has taken advantage of any insolvency statute or debtor/creditor law, or the Concessionaire's affairs have been put in the hands of a receiver;

(D) The occurrence of any act, which operates to deprive Concessionaire of the rights, power, licenses, permits or authorities necessary for the proper conduct and operation of the activities authorized herein;

(E) Abandonment or discontinuance of operations by Concessionaire of its business by any act(s) of Concessionaire;

(F) Any persistent violation on the part of Concessionaire, its agents or employees of the traffic rules and regulations of City at Airport or disregard of the safety of persons using the Airports, upon failure by Concessionaire to correct the same;

(G) Failure on the part of Concessionaire to maintain the quality of service required by the terms of this Agreement, including, but not limited to, any cessation or diminution of service by reason of Concessionaire being unable for any reason to maintain in its employ the personnel necessary to keep its business in operation and available for public use, unless such use is due to strike, lockout, or bona fide labor dispute;

(H) Failure by Concessionaire to maintain its other equipment in a manner satisfactory to the Director;

(I) The Concessionaire has failed to obtain the approval of the Department where required by this Agreement;

(J) The Concessionaire has failed to provide adequate assurances as required under **Sub-Article 12.09, Adequate Assurances;**

(K) The Concessionaire has failed to comply with any provision of **Sub-Article 14.07, Airport Concession Disadvantaged Business Enterprise Participation Plan;**

(L) The Concessionaire has failed in a representation or warranty stated herein; or

(M) The Concessionaire has received three (3) notices of default, of any kind, within a twenty-four (24) month period.

12.02 PAYMENT DEFAULT: Failure of the Concessionaire to make MAG/MMG payments and Percentage Fee payments and other charges required to be paid herein when due and fails to cure the same within five (5) Days after written notice shall constitute a default, and the County may, at its option, terminate this Agreement after five (5) Days notice in writing to the Concessionaire.

12.03 OTHER DEFAULTS: The Department shall have the right, upon thirty (30) Days written notice to the Concessionaire to terminate this Agreement upon the occurrence of any one or more of the following unless the same shall have been corrected within thirty (30) Days after written notice; provided, however, that if it is not reasonably possible to cure such failure within such thirty (30) Day period, such cure period shall be extended for an additional period of such duration the Department shall deem appropriate without waiver of any of the Department's rights hereunder, if within the thirty (30) Days after such written notice the Concessionaire commences to cure such default and thereafter diligently and continuously continues to cure such default:

(A) Failure of the Concessionaire to comply with covenants of this Agreement other than those that constitute default pursuant to **Sub-Article 12.02, Payment Default**.

(B) The conduct of any business, the performance of any service, or the merchandising of any product or service not specifically authorized herein.

(C) Any Event of Default.

12.04 HABITUAL DEFAULT: Notwithstanding the foregoing, in the event that the Concessionaire has frequently, regularly or repetitively defaulted in the performance of or has breached any of the terms, covenants and conditions required herein, to be kept and performed by the Concessionaire, regardless of whether the Concessionaire has cured each individual condition of breach or default as provided for in **Sub-Article 12.02, Payment Default, and Sub-Article 12.03, Other Defaults**, above, the Concessionaire may be determined by the Director to be an "habitual violator". At the time that such determination is made, the Director shall issue to the Concessionaire a written notice, advising of such determination and citing the circumstances thereof. Such notice shall also advise the Concessionaire that there shall be no further notice or grace periods to correct any subsequent breach(s) or default (s) and that any subsequent breach or default, of whatever nature, taken with all previous breaches and defaults, shall be considered cumulative and collectively shall constitute a condition of noncurable default and grounds for immediate termination of this Agreement. In the event of any such subsequent breach or default, the Department may terminate this Agreement upon the giving of written notice of termination to the Concessionaire, such termination to be effective upon the seventh (7) Day following the date of receipt thereof and all payments due hereunder shall be payable to said date, and the Concessionaire shall have no further rights hereunder. Immediately upon receipt of said notice of termination, the Concessionaire shall discontinue its operations at the Airport and proceed to remove all its personal property in accordance with **Sub-Article 12.10, Actions at Termination**, hereof.

12.05 NOTICE OF DEFAULT AND OPPORTUNITY TO CURE: If an Event of Default occurs, the Department shall notify the Concessionaire by sending a written notice of default, specifying the basis for such Event of Default, and advising the Concessionaire that such default must be cured immediately or this Agreement with the Department may be terminated. The Concessionaire can cure and rectify the Event of Default, to the Department's satisfaction, within thirty (30) Days from Concessionaire's receipt of the Default Notice (the "Cure Period") or such other timeframe as delineated in the Agreement. The Department may extend the Cure Period and grant an additional period of such duration as the Department shall deem appropriate without waiver of any of the Department's rights hereunder, so long as, the Concessionaire has commenced curing such default and is effectuating a cure with diligence and continuity during such thirty (30) Day period or any other period which the Department prescribes. The notice of default shall specify the Termination Date by when the Concessionaire shall discontinue the services.

12.06 UNAMORTIZED INVESTMENT EXTINGUISHED: Termination of this Agreement based upon **Sub-Article 12.07, Termination for Abandonment, Sub-Article 12.02,**

Payment Default, Sub-Article 12.03, Other Defaults, Sub-Article 12.04, Habitual Default, or Sub-Article 12.08, Termination for Cause, shall extinguish any unamortized investment amounts owed the Concessionaire by the Department, for the slippage in Location Turnover Dates.

12.07 TERMINATION FOR ABANDONMENT: This Agreement may be terminated in its entirety upon the abandonment by the Concessionaire of the Location or the voluntary discontinuance of Concessionaire's services at the Airport for any period of time exceeding twenty-four (24) consecutive hours, unless such abandonment or discontinuance has been caused by civil disturbance, governmental order or Act of God that prevents the Concessionaire from providing services on the Location for the purposes authorized in **Article 2, Use of Location**.

12.08 TERMINATION FOR CAUSE: The County may terminate this Agreement, effective immediately if: (i) the Concessionaire attempts to meet its contractual obligation(s) with the County through fraud, misrepresentation or material misstatement; or (ii) a principal of the Concessionaire is convicted of a felony during the Term or any Extensions thereof if applicable. The County may, as a further sanction, terminate or cancel any other contract(s) that such individual or corporation or joint venture or other entity has with the County and that such individual, corporation or joint venture or other entity shall be responsible for all direct and indirect costs associated with such termination, including attorney's fees.

The foregoing notwithstanding, any individual, firm, corporation, joint venture, or other entity which attempts to meet its contractual obligations with the County through fraud, misrepresentation or material misstatement may be disbarred from County contracting for up to five (5) years in accordance with the County's debarment procedures. The Concessionaire may be subject to debarment for failure to perform, and all other reasons set forth in § 10-38 of the Code of Miami-Dade County, Florida (the "Code").

12.09 ADEQUATE ASSURANCES: When, in the opinion of the Department, reasonable grounds for uncertainty exist with respect to the Concessionaire's ability to perform the work or any portion thereof, the Department may request that the Concessionaire, within the time frame set forth in the Department's request, provide adequate assurances to the Department, in writing, of the Concessionaire's ability to perform in accordance with terms of this Agreement. In the event that the Concessionaire fails to provide to the Department the requested assurances within the prescribed time frame, the Department may:

1. Treat such failure as a repudiation of this Agreement; and
2. Resort to any remedy for breach provided herein or at law, including but not limited to, taking over the performance of the work or any part thereof either by itself or through others.

12.10 ACTIONS AT TERMINATION: The Concessionaire shall, upon receipt of such notice to terminate, and as directed by the Department:

(A) Stop all work as specified in the notice to terminate;

(B) Take such action as may be necessary for the protection and preservation of the Location and other Department materials and property; and

(C) Vacate, quit and surrender, the Location and storage/support spaces and account for all furnishings, fixtures, equipment, software, vehicles, records, funds, inventories, commodities, supplies and other property of the County, on or before the date of termination.

ARTICLE 13 – CLAIMS AND TERMINATION BY CONCESSIONAIRE

13.01 ADMINISTRATIVE CLAIM PROCEDURES: If the Concessionaire has any claim against the County arising under this Agreement, it will be made in writing within thirty (30) Days of the occurrence of the event to the Director. The exact nature of the claim, including sufficient detail to identify the basis for the claim and the amount of the claim shall be clearly stated. The dispute will be decided by the Director, who will mail or otherwise furnish a written copy of the decision to the Concessionaire at the address furnished in **Sub-Article 18.09, Notices**. The decision of the Director will be final and conclusive unless, within thirty (30) Days from the date of receipt of such copy, the Concessionaire mails or otherwise furnishes to the Department a written appeal addressed to the County Manager. The decision of the County Manager, or his duly authorized representative for the determination of such appeals, will be final and conclusive unless within thirty (30) Days of the Concessionaire's receipt of such decision, the Concessionaire files an action in a court of competent jurisdiction. In connection with any appeal proceeding under this provision, the Concessionaire shall be afforded an opportunity to be heard and to offer other evidence in support of the appeal. Pending final decision of a dispute hereunder, the Concessionaire shall proceed diligently with the performance of this Agreement and in accordance with the County's decision. Failure to perform in accordance with the decision of the Director or the County Manager shall be cause for termination of this Agreement in accordance with **Sub-Article 12.03, Other Defaults**. The failure of the Concessionaire to comply with this administrative claim procedure shall be cause for a waiver of claim and an abandonment of any claim arising out of the event.

13.02 TERMINATION: The Concessionaire shall have the right, upon thirty (30) Days written notice to the County to terminate this Agreement, without liability to the County, at any time after the occurrence of one or more of the following events:

(A) Issuance by any court of competent jurisdiction of any injunction substantially restricting the use of the Airport for airport purposes, and the injunction remaining in force for a period of more than one hundred eighty (180) Days.

(B) A breach by the County of any of the material terms, covenants or conditions contained in this Agreement required to be kept by the County and failure of the Department to remedy such breach for a period of one hundred eighty (180) Days after receipt of written notice from the Concessionaire of the existence of such breach.

(C The assumption by the United States Government or any authorized agency thereof, or any other governmental agency, of the operation, control or use of the airport Location or any substantial part, or parts thereof, in such a manner as substantially to restrict the Concessionaire's provision of services for a period of one hundred eighty (180) Days.

ARTICLE 14 – VOLUNTARY AIRPORT CONCESSION DISADVANTAGED BUSINESS ENTERPRISE (ACDBE)

14.01 ACDBE PARTICIPATION: It is the policy of the County that ACDBEs shall have the maximum practical opportunity to participate in the performance of County agreements. As used in the Bid Documents, the term "Airport Concession Disadvantaged Business Enterprises (ACDBE)" means a small business concern, which (a) is at least fifty-one percent (51%) owned by one or more socially and economically disadvantaged individuals, or in the case of any publicly owned business, at least fifty-one percent (51%) of the stock which is owned by one or more socially and economically disadvantaged individuals; and (b) whose management and daily business operations are controlled by one or more of the socially and economically disadvantaged individuals who own it as set forth in 49 CFR Part 23, Code of Federal Regulations. ACDBE participation is voluntary, but not required for this Lease and Concession Agreement. ACDBE participation can be achieved either through the Proposer being an ACDBE itself, a partnership or joint venture, or subcontracting a percentage of gross revenues.

Airport Concession Disadvantaged Business Enterprise (ACDBE) Participation must be submitted with the Proposal in accordance with the requirements of Appendix C and its supporting documents. The Successful Proposer will be required to submit to the Department's Minority Affairs Division, Monthly Utilization Reports (MUR) reflecting ACDBE revenue and operational expenses, commencing 90 days after beneficial occupancy and monthly thereafter, on or before the 10th of every month.

14.02 COUNTING ACDBE PARTICIPATION:

1. When an ACDBE participates in a contract, only the value of the work actually performed by the ACDBE toward the ACDBE participation will be counted.

2. When an ACDBE performs as a participant in a joint venture, count a portion of the gross receipts equal to the distinct, clearly defined portion of the work of the

concession that the ACDBE performs with its own forces toward ACDBE participation.

3. Expenditures to an ACDBE contractor will be counted only if the ACDBE is performing a commercially useful function as defined below:

   (a) An ACDBE performs a commercially useful function when it is responsible for execution of specific quantifiable work of the contract and is carrying out its responsibilities by actually performing, or managing, or supervising the specific identified work.

   MDAD will determine whether an ACDBE is performing a commercially useful function by evaluating the specific duties outlined in the Joint Venture Agreement; the subcontract agreement or other agreements in accordance with industry practices, whether the amount the firm is to be paid under the contract is commensurate with the work it is actually performing and other relevant factors.

   (b) An ACDBE does not perform a commercially useful function if its role is limited to that of an extra participant in a financial or other transaction, contract, or project through which funds are passed in order to obtain the appearance of ACDBE participation.

   (c) If an ACDBE does not perform or exercise responsibility for at least their percentage of its participation or if the ACDBE subcontracts a greater portion of the work of a contract than would be expected on the basis of normal industry practice for the type of work involved, it will be presumed that the ACDBE is not performing a commercially useful function.

   (d) When an ACDBE is presumed not to be performing a commercially useful function as provided in paragraph (c) of this section, the ACDBE may present evidence to rebut this presumption. MDAD will determine that the firm is performing a commercially useful function given the type of work involved and normal industry practices.

4. MDAD's decision on commercially useful function matters are final.

14.03 ACDBE PARTICIPATION ACHIEVED THROUGH JOINT VENTURE ("JV") PARTNERING: Proposers may decide to satisfy a part of the ACDBE participation by Joint Venturing with an ACDBE. The ACDBE partner must meet the eligibility standards set forth in 49 CFR Part 23. A "joint venture" or ("JV") means an association of an ACDBE firm and one or more other firms to carry out a single, for-profit business enterprise, for which the parties combine their property, capital, efforts, skills and knowledge, and in which the ACDBE is responsible for a distinct, clearly defined portion of the work of the contract and whose shares in the capital contribution, control,

management, risks, and profits of the joint venture are commensurate with its ownership interest. Joint Venture entities are not certified as ACDBEs. The joint venture agreement must specify the following:

(1) Each ACDBE Joint Venture ("JV") partner must be responsible for a clearly defined portion of the work to be performed. The work should be detailed separately from the work performed by the non-ACDBE JV partner.

The work should be submitted as part of this solicitation and annually thereafter to the Aviation Department's Minority Affairs Division. The work to be performed by the ACDBE joint venture partner should be store specific with regards to tasks and location.

The ACDBE Joint Venture partner will be required to spend the minimum amount of aggregate time on-site, focused on the operation of the concession. Such "minimum amount of aggregate time" is defined as ten hours per week.

(2) Each Joint Venture partner must submit the Monthly Utilization Reports (MURs), in addition to the ACDBE Appendix 4 form, Monthly reports providing details of how the performance objectives were achieved and providing documentation of that achievement on the ACDBE Appendix 4 form. This information should include, but not be limited to:

a. Details of training sessions, including class rosters and lesson plans.

b. Deliverables and work products.

c. Time sheets of employees used to fulfill objectives. Time sheets must accurately reflect hours worked and compensation earned.

d. Proof that employees actually work for them (payroll, payroll tax returns and the like).

As described below, each Proposer must submit, as part of its Proposal, a plan for the achievement of ACDBE participation, including Schedule of Participation and the Letter of Intent from ACDBEs who are Certified or have applied for Certification to the Miami-Dade County, Department of Small Business Development (SBD) as required by Airport Concession Disadvantaged Business Enterprise Participation Plan (ACDBE).

Without limiting the requirements of the Agreement, the County will have the right to review and approve all agreements utilized for the achievement of participation. Such agreements must be submitted with the Proposal.

14.04 CERTIFICATION-AIRPORT CONCESSION DISADVANTAGED BUSINESS ENTERPRISE (ACDBE): In order to participate as an ACDBE on this contract, an ACDBE must be certified or have applied for certification to the Miami-Dade County, Department of Small Business Development (SBD) at the time of Proposal submittal.

Application for certification as an ACDBE may be obtained by contacting the Miami-Dade County, Department of Small Business Development (SBD) located at 111 N.W. 1st Street, Stephen P. Clark Center, 19th Floor, Miami Florida 33128-1974 or by telephone at (305) 375-3111 or facsimile at (305) 375-3160, or visit their website at www.co.miami-dade.fl.us/DBD/.

The ACDBE Certification List is maintained and published at least every other week by the Miami-Dade County, Department of Small Business Development (SBD), and contains the names and addresses of currently certified Airport Concession Disadvantaged Business Enterprise (ACDBEs) certified by them.

The FLUCP Directory is available at www.bipincwebapps.com/biznetflorida/. The Directory lists the firm's name address, phone number, date of the most recent certification, certifying agency and type of work the firm has been certified to perform. The FLUCP updates the data every 24 hours and revises the Directory regularly. The address for Florida UCP is:

Florida Department of Transportation,
Equal Opportunity Office
605 Suwannee Street, MS 65
Tallahassee, Florida 32399-0450
Tel: (850) 414-4747 Fax: (850) 414-4879

14.05 AFFIRMATIVE ACTION AND AIRPORT CONCESSION DISADVANTAGED BUSINESS ENTERPRISE PROGRAMS: The Successful Proposer acknowledges that the provisions of 14 CFR Part 152, Affirmative Action Employment Programs, and 49 CFR Part 23, Airport Concession Disadvantaged Business Enterprise Programs, are applicable to the activities of the Successful Proposer under the terms of the Agreement, unless exempted by said regulations, and hereby agrees to comply with all requirements of the Department, the Federal Aviation Administration and the U.S. Department of Transportation.

These requirements may include, but not limited to, the compliance with Airport Concession Disadvantaged Business Enterprise and/or Employment Affirmative Action participation, the keeping of certain records of good faith compliance efforts, which would be subject to review by the various agencies, the submission of various reports and, if directed by the Department, the contracting of specified percentages of goods and services contracts to Airport Concession Disadvantaged Business Enterprises. In the event it has been determined, in accordance with applicable regulations, that the Successful Proposer

has defaulted in the requirement to comply with the provisions of this section and fails to comply with the sanctions and/or remedies then prescribed, the County shall have the right upon written notice to the Concessionaire, to terminate this Agreement, pursuant to Default language referenced in the Agreement.

The Successful Proposer shall include the following nondiscrimination language in concession related contracts with MDAD:

> *"This agreement is subject to the requirements of the US Department of Transportation's Regulations 49 CFR Part 23. The concessionaire or contractor agrees that it will not discriminate against any business owner because of the owner's race, color, national origin, or sex in connection with the award or performance of any concession agreement, management contract, or subcontract, purchase or lease agreement, or other agreement covered by 49 CFR Part 23".*
>
> *"The concessionaire or contractor agrees to include the above statements in any subsequent concession agreement or contract covered by 49 CFR Part 23, that it enters and cause those businesses to similarly include the statements in further agreements".*

The Successful Proposer agrees to include the above statements in any subsequent lease and concession agreements.

14.06 ACDBE MENTORING, ASSISTANCE AND TRAINING PROGRAM: Consistent with the goal of providing ACDBEs with hands-on participation and the responsibility for a clearly defined portion of the Airport Concession operations, subject to Section 4 "Voluntary Airport Concession Disadvantaged Business Enterprises" hereof, each ACDBE shall have the duty and responsibility to operate certain areas of the concession(s) following a mentoring period, if needed, which shall include but not be limited to the following specific duties and responsibilities:

A. Shop Store Operations

(1) Passenger profile analysis
(2) Cash handling/sales audit
(3) Enhancing sales
(4) Selling to the customer
(5) Staffing to meet customer levels
(6) Opening and closing procedures

B. Personnel

(1) Employment practices
(2) Compliance with wage and hour laws

(3) Compliance with County and Airport requirements
(4) Designing compensation and benefits plans
(5) Management and staff training to enhance product knowledge and customer service
(6) Warehousing packaging and sales reporting of merchandise

C. Shop Design and Display

(1) Retail layout
(2) Merchandising techniques
(3) Visual display techniques

D. Loss Prevention

(1) External and internal theft
(2) Shop security

E. Books, Records and Reports

(1) The books of account and supporting records of the joint venture(s) and the sub-concessionaire(s) shall be maintained at the principal office and shall be open for inspection by the MDAD or the ACDBE sub-concessionaire(s) or Joint Venture(s), upon reasonable prior written notice, during business hours.

(2) The books of account, for both financial and tax reporting purposes shall be maintained on the accrual method of accounting. The Successful Proposer shall provide to the sub-concessionaire(s) or joint venture(s), within an agreed upon time after the end of each month during the term of this agreement, an unaudited operating (*i.e.,* income) statement for the preceding month and for the year-to-date.

(3) Reports of the ACDBE Mentoring Program shall be submitted to the Department's Minority Affairs and Business Management Divisions, outlining the specific areas of training (i.e., components covered, total number of hours of training, training material covered, etc.).

14.07 AIRPORT CONCESSION DISADVANTAGED BUSINESS ENTEPRISE PARTICIPATION: The Successful Proposer shall contract with those firm(s) as are listed within the Successful Proposer's ACDBE Participation Proposal documents and approved by the Department, and shall thereafter neither (i) terminate such ACDBE firm(s), nor (ii) reduce the scope of the work to be performed, nor (iii) decrease the percentage of participation, nor (iv) decrease the dollar amount of participation by the ACDBE firm(s) without the prior written authorization of the Department.

The County shall monitor the compliance of the Successful Proposer with the requirements of this provision during the term of this agreement.

The County shall have access to the necessary records to examine such information as may be appropriate for the purpose of investigating and determining compliance with this provision, including, but not limited to, records of expenditures, contracts between the Successful Proposer and the ACDBE Participant, and other records pertaining to ACDBE Participation.

If at any time the County has reason to believe that the Successful Proposer are in violation of this provision, the County may, in addition to pursuing any other available legal remedy, impose sanctions which may include, but are not limited to, the termination or cancellation of the agreement in whole or in part, unless the Successful Proposer demonstrates, within a reasonable time, its compliance with the terms of this provision. No such sanction shall be imposed by the County upon the Successful Proposer except pursuant to a hearing conducted by the MDAD Compliance Monitor and/or Director.

ARTICLE 15- RULES, REGULATIONS AND PERMITS

15.01 RULES AND REGULATIONS: The Concessionaire shall comply with the Ordinances of the County including Chapter 25, Code of Miami-Dade County, Florida, as the same may be amended from time to time, Operational Directives issued thereunder by the Department, all additional laws, statutes, ordinances, regulations and rules of the federal, State and County governments, and any and all plans and programs developed in compliance therewith, and any County Administrative Orders and resolutions of the Board of County Commissioners which may be applicable to its operations or activities under this Agreement.

15.02 VIOLATIONS OF RULES AND REGULATIONS: The Concessionaire agrees to pay, on behalf of the County, any liquidated damage, assessment or fine issued against the County, or the Department to defend in the name of the County any claim, assessment or civil action, which may be presented or initiated by any agency or officer of the federal, State or County governments based in whole or substantial part upon a claim or allegation that the Concessionaire, its agents, employees, or invitees, have violated any law, ordinance, regulation or rule described in **Sub-Article 15.01, Rules and Regulations**, or any plan or program developed in compliance therewith. The Concessionaire further agrees that the substance of **Sub-Article 15.02, Violations of Rules and Regulations,** and **Sub-Article 15.01, Rules and Regulations**, shall be included in every agreement which the Concessionaire may enter into related to its activities under this Agreement and that any agreement shall specifically provide that "Miami-Dade County, Florida is a third party beneficiary of this and related provisions." This provision shall not constitute a waiver of any other conditions of this Agreement prohibiting or limiting assignments, subletting or subleasing.

15.03 PERMITS AND LICENSES: The Concessionaire shall obtain, pay for and maintain on a current basis and make available to the Department upon request, all permits and licenses as required for the performance of its services.

Resolution No. 456-07 Prohibiting County and Public Health Trust Employees from Using Products Containing Trans Fats: The Concessionaire shall not market or distribute at the designated Premises under this Agreement any pre-packaged, prepared or other foods, including catered foods, derived from or containing trans-fats (see Exhibit M). The Concessionaire shall, periodically review existing inventories and projected products, to assure that only trans-fat free products are being offered for public consumption.

Except for the aforementioned modifications, and in all other respects, the Agreement shall remain in full force and effect in accordance with the terms and conditions specified therein.

ARTICLE 16 – GOVERNING LAW

16.01 GOVERNING LAW; VENUE: This Agreement shall be governed and construed in accordance with the laws of the State of Florida. The venue of any action on this Agreement shall be laid in Miami-Dade County, Florida and any action to determine the rights or obligations of the parties hereto shall be brought in the courts of the State of Florida.

16.02 NOTICE OF COMMENCEMENT OF CIVIL ACTION: In the event that the County or the Concessionaire commence a civil action in the state or federal courts for Miami-Dade County, where such action is based in whole or in part upon an alleged breach of this Agreement, the County and the Concessionaire agree to waive the procedures for initial service of process mandated by Chapters 48 and 83 of the Florida Statues, by Rule 1.070 of the Florida Rules of Civil Procedure, and by Rule 4(c) of the Federal Rules of Civil Procedures. In such event, the County and the Concessionaire agree to submit to the jurisdiction of the court in which the action has been filed when initial service has been made either by personal service or by certified mail, returned receipt requested upon the representatives of the parties indicated in **Sub-Article 18.09, Notices**, of this Agreement, with a copy provided to the County Attorney and the attorney, if any, which the Concessionaire has designated in writing. Notwithstanding the foregoing, and in addition thereto, the Concessionaire, if a corporation, shall designate a registered agent and a registered office and file such designation with the Florida Department of state in accordance with Chapters 48 and 607 of the Florida Statues.

16.03 LABOR PEACE REQUIREMENT: Pursuant to Resolution# R-148-07, the Concessionaire provided a signed copy of the labor peace agreement for their employees as part of their Proposal to assure that no labor dispute or unrest will disrupt their operations at Miami International Airport (MIA). See Appendix N. Furthermore, the County has the right, in the event of a labor disruption, to suspend it's obligations under the contract while the labor disruption is ongoing and to use alternative means to provide the service that is affected by the labor disruption. In the event a Proposer is unable to reach an agreement with a labor organization regarding the terms of a labor peace agreement, the dispute between the Proposer and the labor organization shall be resolved by expedited binding arbitration in which the decision shall be rendered within ten (10) days of the request for

arbitration but no later than five (5) days prior to the date the proposal is due. The Proposer and the labor organization shall equally share the costs of arbitration.

ARTICLE 17 – TRUST AGREEMENT

17.01 INCORPORATION OF TRUST AGREEMENT BY REFERENCE: Notwithstanding any of the terms, provisions and conditions of this Agreement, it is understood and agreed by the parties hereto that the provisions of the Amended and Restated Trust Agreement, dated as of the 15th day of December, 2002, as amended from time to time, by and between the County and JPMorgan Chase Bank, as Trustee, and Wachovia Bank, National Association, as Co-Trustee (the "Trust Agreement"), which Trust Agreement is incorporated herein by reference, shall prevail and govern in the event of any inconsistency with or ambiguity relating to the terms and conditions of this Agreement, including the rents, fees or charges required herein, and their modification or adjustment. A copy of the Trust Agreement may be examined by the Concessionaire at the offices of the Department during normal working hours.

17.02 ADJUSTMENT OF TERMS AND CONDITIONS: If at any time during the Term or any Extension thereto, as applicable, a court of competent jurisdiction shall determine that any of the terms and conditions of this Agreement, including the rentals, fees and charges required to be paid hereunder to the Department by the Concessionaire or by other Concessionaires under other agreements of the Department for the lease or use of the Location used for similar purposes, are unjustly discriminatory, the County shall have the right to modify such terms and conditions and to increase or otherwise adjust the rentals fees and charges required to be paid under this Agreement in such a manner as the County shall determine is necessary and reasonable so that terms and conditions and the rentals fees and charges payable by the Concessionaire and others shall not thereafter be unjustly discriminatory to any user of like locations and shall not result in any violation of the Trust Agreement or in any deficiency in revenues necessary to comply with the covenants of the Trust Agreement. In the event the County has modified the terms and conditions of this Agreement, including any adjustment of the rentals, fees and charges required to be paid to the County, pursuant to this provision, this Agreement shall be amended to incorporate such modification of the terms and conditions upon the issuance of written notice from the County to the Concessionaire.

17.03 INSPECTIONS: The authorized employees and representatives of the County and of any applicable federal or state agency having jurisdiction hereof shall have the right of access to the Location and any storage/support spaces at all reasonable times for the purposes of inspection to determine compliance with the provisions of this Agreement or applicable law. The right of inspection shall impose no duty on the County to inspect and shall impart no liability on the County should it not make such inspection(s).

17.04 MIAMI-DADE COUNTY INSPECTOR GENERAL REVIEW: According to Section 2-1076 of the Code of Miami-Dade County, as amended by Ordinance No. 99-63, Miami-Dade County has established the Office of the Inspector General which may, on a random basis, perform audits on all Department contracts, throughout the duration of said contracts, except as otherwise provided below. The cost of the audit of any contract will be one quarter of one percent (0.25%) of the total contract amount.

Exception: The above application of one quarter of one percent (0.25%) fee assessment shall not apply to the following contracts: (a) contracts for legal services; (b) contracts for financial advisory services; (c) auditing contracts; (d) facility rentals and lease agreements; (e) concessions and other rental agreements; (f) insurance contracts; (g) revenue-generating contracts; (h) professional service agreements under $1,000; (i) management agreements; (l) small purchase orders as defined in Miami-Dade County Administrative Order No. 3-2; (m) federal, state and local government-funded grants; and (n) interlocal agreements. ***Notwithstanding the foregoing, the Miami-Dade County Board of County Commissioners may authorize the inclusion of the fee assessment of one quarter of one percent (0.25%) in any exempted contract at the time of award.***

Nothing contained above shall in any way limit the powers of the Inspector General to perform audits on all Department contracts including, but not limited to, those contracts specifically exempted above.

ARTICLE 18 – OTHER PROVISIONS

18.01 PAYMENT OF TAXES: The Concessionaire shall pay all taxes lawfully assessed against its interests in the Location, any storage/support spaces and its services hereunder, provided however, that the Concessionaire shall not be deemed to be in default of its obligations under this Agreement for failure to pay such taxes pending the outcome of any legal proceedings instituted in courts of competent jurisdiction to determine the validity of such taxes. Failure to pay same after the ultimate adverse conclusion of such contest shall constitute an Event of Default, pursuant to **Sub-Article 12.03, Other Defaults**, hereof.

18.02 ALTERATIONS BY CONCESSIONAIRE: The Concessionaire shall not alter or modify the Location or any storage/support spaces, except in accordance with Article 4, Improvements to the Location, herein, without first obtaining written approval from the Department.

18.03 RIGHTS TO BE EXERCISED BY DEPARTMENT: Wherever in this Agreement rights are reserved to the County, such rights may be exercised by the Department.

18.04 ADMINISTRATIVE MODIFICATIONS: It is understood and agreed to that the Department, upon written notice to the Concessionaire, shall have the right to modify

administratively and to revise Articles and the Exhibits to this Agreement, including the provisions of **Sub-Article 1.07, Addition, Deletion and Modification of Location**, **Sub-Article 18.02, Alterations by Concessionaire**, **Sub-Article, 21.02, Right to Amend**, and **Sub-Article 21.04, Right to Modify**.

18.05 SECURITY: The Concessionaire acknowledges and accepts full responsibility for the security and protection of the Location. The Concessionaire fully understands and acknowledges that any security measures deemed necessary by the Concessionaire for protection of the Location shall be the sole responsibility of the Concessionaire and shall involve no cost to the Department.

18.06 RIGHTS OF DEPARTMENT AT AIRPORT: The Department shall have the absolute right, without limitation, to make any repairs, alterations and additions to any structures and locations at the Airport. The County shall, in the exercise of such right, be free from any, and all liability to the Concessionaire for business damages occasioned during the making of such repairs, alterations and additions except those occasioned by the sole acts of negligence or intentional acts of the County its employees, or agents.

18.07 OTHER DEPARTMENT RIGHTS: The Concessionaire shall be liable for any physical damage caused to the Location by the Concessionaire, its employees, agents, contractors, subcontractors, supplier. The liability shall encompass: (i) the Concessionaire's repair of the Location, or if the Location cannot be repaired, payment to the Department of the fair market value replacement cost of the Location; and (ii) any other such damages to the Department arising from the physical damage caused by the Concessionaire and its employees, agents, contractors, subcontractors or suppliers. The County may also initiate an action for specific performance and/or injunctive relief.

18.08 FEDERAL SUBORDINATION: This Agreement shall be subordinate to the provisions of any existing or future agreements between the Department and the United States of America relative to the operation and maintenance of the Airport, the execution of which has been or may be required as a condition precedent to the expenditure of federal funds for the development of the Airport. All provisions of this Agreement shall be subordinate to the right of the United States of America to lease or otherwise assume control over the Airport, or any part thereof, during time of war or national emergency for military or naval use and any provisions of this Agreement inconsistent with the provisions of such lease to the United States of America shall be suspended.

18.09 NOTICES: Any notices given under the provisions of this Agreement shall be in writing and shall be hand delivered or sent by facsimile transmission (providing evidence of receipt), nationally recognized overnight courier service, or Registered or Certified Mail, Return Receipt Requested, to:

To the County:
(Mailing Address)

Director
Miami-Dade Aviation Department
Post Office Box 025504
Miami, Florida 33102-5504

or (physical address):

Miami International Airport
Terminal Building
Director's Office
Concourse E-5th floor
Miami, FL 33122

To the Concessionaire:

President
TAXCO STERLING CO., INC.
10282 Johns Hollow Road
Vienna, VA 22182

or to such other respective addresses as the parties may designate to each other in writing from time to time. Notices by: (i) facsimile shall be deemed tendered on the date indicated on the facsimile confirmation receipt; (ii) nationally recognized overnight courier service shall be deemed tendered on the delivery date indicated on the courier service receipt; and (iii) Registered or Certified Mail shall be deemed tendered on the delivery date indicated on the Return Receipt from the United States Postal Service or on the express mail service receipt.

18.10 SEVERABILITY: If any provision of this Agreement or the application thereof to either party to this Agreement is held invalid by a court of competent jurisdiction, such invalidity shall not affect other provisions of this Agreement which can be given effect without the invalid provision, and to this end, the provisions of this Agreement shall be severable.

18.11 RIGHTS RESERVED TO DEPARTMENT: All rights not specifically granted the Concessionaire by this Agreement are reserved to the Department.

18.12 COUNTY LIEN: The County shall have a lien upon all personal property of the Concessionaire in the Location to secure the payment to the Department of any unpaid monies accruing to the Department under the terms of this Agreement.

18.13 AUTHORIZED USES ONLY: The Concessionaire shall not use or permit the use of the Location or the Airport for any illegal or unauthorized purpose or for any purpose which would increase the premium rates paid by the Department on or invalidate any insurance

policies of the Department or any policies of insurance written on behalf of the Concessionaire under this Agreement.

18.14 NO WAIVER: There shall be no waiver of the right of the Department to demand strict performance of any of the provisions, terms and covenants of this Agreement nor shall there be any waiver of any breach, default or non-performance hereof by the Concessionaire unless such waiver is explicitly made in writing by the Department. Any previous waiver or course of dealing shall not affect the right of the Department to demand strict performance of the provisions, terms and covenants of this Agreement with performance hereof by the Concessionaire.

18.15 SECURED AREAS/AIRFIELD OPERATIONS AREA (AOA) STERILE AREAS SECURITY: The Concessionaire acknowledges and accepts full responsibility for compliance with all applicable Federal, State, and Local laws, rules and regulations including those of the Transportation Security Administration (TSA), Homeland Security, FAA, CBP and MDAD as set forth from time to time relating to Contractor's activities at the Miami International Airport (MIA).

In order to maintain high levels of security at MIA, the Concessionaire must obtain MDAD photo identification badges for all the Concessionaire employees working in the Secured/AOA/Security Identification Display Area (SIDA) Sterile Areas or any other restricted areas of the Airport. All Concessionaire employees will be required to obtain photo identification badges and will be subject to fingerprint-based criminal history records checks.

The Concessionaire shall be responsible for requesting MDAD to issue identification badges to all employees who the Concessionaire requests to be authorized access to the Secured/AOA/SIDA/Sterile Areas and any other restricted areas of the airport and shall be further responsible for the immediate reporting of all lost or stolen ID badges and the immediate return of the ID badges of all personnel transferred from Airport assignment or terminated from the employer of the Concessionaire or upon final acceptance of the work or termination of this Agreement. The Concessionaire will be responsible for fees associated with lost and unaccounted for badges as well as the fee(s) for fingerprinting and ID issuance.

All employees of the Concessionaire who must work within MDAD Secured/AOA/SIDA/Sterile areas or any other restricted areas at MIA shall be supplied with MDAD identification badges as specified above, which must be worn at all times while within the referenced secured areas. Badges shall be worn on outer garments above the waist so as to be clearly visible in order to distinguish, on sight, employees assigned to a particular company area. Each employee must complete the SIDA training program conducted by MDAD and comply with all other TSA, Homeland Security, FAA, CBP and MDAD requirements as specified by the MDAD at the time of application for the ID badge

before an ID badge is issued. At the present time, MDAD Security and Safety ID Section regularly provides SIDA Training.

Concessionaire Ramp Permits will be issued to the Concessionaire authorizing vehicle entrance to the Airfield Operations Area (AOA) through specified Miami-Dade Aviation Department guard gates for the term of any Project. These permits will be issued only for those vehicles that must have access to the site during the performance of the work. Theses permits will be only issued to company owned vehicles or company leased vehicles (leased from a commercial leasing company). AOA decals, passes, or permits to operate within the AOA will not be issued to privately owned or privately leased vehicles. All vehicles operating within the AOA must have conspicuous company identification signs (minimum of three inch lettering) displayed on both sides of the vehicles.

All vehicles operating within the AOA must be provided with the Automobile Liability Insurance required elsewhere in this Agreement. Proof of such insurance is provided to MDAD Airside Operations Division upon request.

Only Concessionaire staff with pictured MDAD ID badges shall be allowed to operate a motor vehicle on the AOA without a MDAD escort. The Concessionaire shall require such employee to have a current, valid, appropriate Florida driver's license and to attend and successfully complete the AOA Driver Training Course conducted periodically by the Department. The privilege of a person to operate a motor vehicle on the AOA may be withdrawn by the Department because of violation of AOA driving rules or loss of Florida driver's license.

The Concessionaire agrees that its personnel, vehicles, cargo, goods, and other personal property are subject to being searched when attempting to enter, leave or while on the AOA. It is further agreed that the MDAD has the right to prohibit an individual, agent, or employee of the Concessionaire from entering the AOA, based upon facts which would lead a person of reasonable prudence to believe that such individual might be inclined to engage in theft, cargo tampering, aircraft sabotage, or other unlawful activities, including repeated failure to comply with MDAD's or the TSA, Homeland Security, FAA, CBP, SIDA access control policies, rules and regulations. Any person denied access to the AOA or whose prior authorization has been revoked or suspended on such grounds shall be entitled to a review hearing before the Director or his/her authorized designee within a reasonable time. Prior to such hearing, the person denied access to the AOA should be advised, in writing, of the reason for such denial.

The Concessionaire acknowledges and understands that these provisions are for the protection of all users of the AOA and are intended to reduce the incidence of thefts cargo tampering, aircraft sabotage, and other unlawful activities at the Airport and to maximize compliance with TSA, Homeland Security, FAA/Federal Inspection Services agencies and MDAD access control policies and procedures.

The Concessionaire understands and agrees that vehicle and equipment shall not be parked/stored on the AOA in areas not designated or authorized by MDAD nor in any manner contrary to any posted regulatory signs, traffic control devices, or pavement markings.

The Concessionaire understands and agrees that all persons entering and working in or around arriving international aircraft and facilities used by the various Federal Inspection Services agencies may be subject to the consent and approval of such agencies. Persons not approved or consented to by the Federal Inspection Services agencies shall not be employed by the Concessionaire in areas under the jurisdiction or control of such agencies. Persons not approved or consented to by the Federal Inspection Services agencies who enter such areas are subject to fines, which shall be borne entirely by the persons and/or the Concessionaire.

Notwithstanding the specific provisions of this Article, the Owner shall have the right to add to, amend, or delete any portion hereof in order to meet reasonable security requirements of MDAD or of the TSA/Homeland Security/FAA/Federal Inspection Services agencies.

The Concessionaire shall ensure that all employees so required participate in such safety, security and other training and instructional programs, as MDAD or appropriate Federal agencies may from time to time require.

Concessionaire agrees that it will include in all contracts and subcontracts with its MIA sub-consultants, service providers, and suppliers an obligation by such parties to comply with all security requirements applicable to their operations at the Airport. The Concessionaire agrees that in addition to all remedies, liquidated damages, and sanctions that may be imposed by TSA, Homeland Security, FAA, Federal Inspection Services Agencies or MDAD upon Concessionaire sub-consultants, suppliers, and their individual employees for a violation of applicable security provisions. The Concessionaire shall be responsible to the Owner for all such violations and shall indemnify and hold the Owner harmless for all costs, fines and liquidated damages arising there from, such costs to include reasonable attorneys' fees.

18.16 INTENT OF AGREEMENT: This Agreement is for the benefit of the parties only and does not: (a) grant rights to third party beneficiaries or to any other person; or (b) authorize non-parties to the Agreement to maintain an action for personal injuries, professional liability, or property damage pursuant to the terms or provisions of the Agreement.

18.17 MODIFICATIONS: This Agreement may be modified and revised in writing and duly executed by the parties hereto. Such modification may be made unilateral by the Department only as permitted pursuant to **Sub-Article 18.04, Administrative Modifications, Sub-Article 21.02, Right to Amend**, and **Sub-Article 21.04, Right to Modify**. Any oral representation or modification concerning this Agreement shall be of no force or effect. No modification, amendment, or alteration in the terms or conditions

contained herein shall be effective unless set forth in writing in accordance with this Agreement.

18.18 RADON DISCLOSURE: In accordance with Section 404.056, Florida Statutes, the following disclosure is hereby made: **"Radon Gas: Radon is a naturally occurring radioactive gas. When accumulated in a building in sufficient quantities, it may present health risks to persons who are exposed to it over time. Levels of radon that exceed federal and state guidelines have been found in buildings in Florida. Additional information regarding radon and radon testing may be obtained from your county public health unit."**

18.19 TRADEMARKS AND LICENSES: The Department may, from time to time, require the Concessionaire as part of its advertising and marketing program to utilize certain patents, copyrights, trademarks, trade names, logos, computer software and other intellectual property owned by the Department in the performance of this Agreement which patents, copyrights, trademarks, trade names, logos, computer software and intellectual property may have been created pursuant to the terms of this Agreement. Such permission, when granted, shall be evidenced by a nonexclusive license executed by the Concessionaire and the Department, on behalf of the Department granting the Concessionaire the right, license and privilege to use a specific patent, copyright, trademark, trade name, logo, computer software or other intellectual property without requiring payment of fees therefore. Failure of the parties to execute a formal license agreement shall not vest title or interest in such patent, copyright, trademark, trade name, logo computer software or intellectual property in the using party.

18.20 HEADINGS: The headings of the various Articles and Sub-Articles of this Agreement, and its Table of Contents are for convenience and ease of reference only, and shall not be construed to define, limit, augment or describe the scope, context or intent of this Agreement or any part or parts of this Agreement.

18.21 BINDING EFFECT: The terms, conditions and covenants of this Agreement shall inure to the benefit of and be binding upon the parties hereto and their successors and assigns. This provision shall not constitute a waiver of any conditions prohibiting assignment or subletting.

18.22 GOVERNMENTAL DEPARTMENT: Nothing in this Agreement shall be construed to waive or limit the governmental authority of the County as a political subdivision of the State of Florida.

18.23 INDEPENDENT CONTRACTOR: The Concessionaire shall perform all services described herein as an independent contractor and not as an officer, agent, servant, or employee of the Department. All personnel provided by the Concessionaire in the performance of this Agreement shall be considered to be, at all times, the sole employees of the Concessionaire under its sole discretion, and not employees or agents of the Department: Except as provided in § 2-11.1(s) of the Code, the Concessionaire represents and warrants: (i) it has not employed or retained any company or person other than a bona

fide employee working solely for the Concessionaire to solicit or secure this Agreement; and (ii) it has not paid, or agreed to pay any company or other person any fee, commission, gift, or other consideration contingent upon the execution of this Agreement. A breach of this warranty makes this Agreement voidable by the Department without any liability to the Contractor for any reason.

18.24 OTHER LIENS: Concessionaire shall not permit any mortgages, deeds of trust or similar liens to be imposed on the Location, the leasehold, or the furniture, fixtures and equipment or any portion thereof. Concessionaire shall not permit or suffer any liens, including mechanics', materialmen's and tax liens to be imposed upon the Location, or any part thereof, without promptly discharging the same. Notwithstanding the foregoing, Concessionaire may in good faith contest any such lien if Concessionaire provides a bond in an amount and form acceptable to Department in order to clear the record of any such liens. Concessionaire further agrees that it shall not sell, convey, mortgage, grant, bargain, encumber, pledge, assign or otherwise transfer its leasehold interest in the Location or any personal property or trade fixtures in the Location, including any furniture, fixtures and equipment or any part thereof or permit any of the foregoing to occur. Concessionaire shall assume the defense of and indemnify and hold harmless County against any and all liens and charges of any and every nature and kind which may at any time be established against said Location and improvements, or any part thereof, as a consequence of any act or omission of Concessionaire or as a consequence of the existence of Concessionaire's interest under this Lease.

ARTICLE 19 - NOT USED

ARTICLE 20 - WAIVER OF CLAIMS

The Concessionaire hereby waives any and all claims it now has or may hereafter have against the County and the Department, and against any member, including, without limitation, all members of the Board of County Commissioners, officers, agents or employees of each, for any loss of anticipated profits caused by any suit or proceeding attacking directly or indirectly the validity of this Agreement or any part thereof, or by any judgment or award in any suit or proceeding declaring this Agreement or any part thereof, or by judgment or award in any suit or proceeding declaring this Agreement null and void or voidable, or delaying the same or any part thereof from being carried out. The Concessionaire hereby further waives any and all claims for compensation for any and all loss or damage sustained by reason of any delay in making the Location available to the Concessionaire or by reason of any defects or deficiencies in the Location or in the terminal building including any defect or deficiency in the Location or in the terminal building which substantially impedes the Concessionaire's ability to operate a concession at the Location or because of any interruption in any of the services thereto, including, but not limited to, power, telephone, heating, air conditioning or water supply systems, drainage or sewage systems, and Concessionaire hereby expressly releases the County and Department from any and all demands, claims, actions, and causes of action arising from any of such causes.

ARTICLE 21 - REQUIRED, GENERAL AND MISCELLANEOUS PROVISIONS

21.01 AGREEMENTS WITH STATE OF FLORIDA AND MIAMI-DADE COUNTY: This Agreement shall be subject to all restrictions of record affecting the Airport and the use thereof, all federal, State, County laws, and regulations affecting the same, and shall be subject and subordinate to the previsions of any and all existing agreements between the County and the State of Florida, or its boards, agencies or commissions, and to any future agreement between or among the foregoing relative to the operation or maintenance of the Airport, the execution of which may be required as a condition precedent to the expenditure of federal, State, County funds for the development of the Airport, or any part thereof. All provisions hereof shall be subordinate to the right of the United States to occupy or use the Airport, or any part thereof, during time of war or national emergency.

21.02 RIGHT TO AMEND: In the event that the Federal Aviation Administration or its successors requires modifications or changes in this Agreement as a condition precedent to the granting of its approval or to the obtaining of funds for improvements at the Airport, Concessionaire hereby consents to any and all such modifications and changes as may be reasonably required.

21.03 CONCESSIONAIRE COVENANTS AND ASSURANCES:

A. Covenants Against Discrimination:

1. Concessionaire on behalf of itself, successors in interest and its assigns, as a part of the consideration hereof, does hereby covenant and agree that (1) no person on the grounds of race, color or national origin shall be excluded from participation in, denied the benefits of, or be otherwise subjected to discrimination in the use of the Location or the Airport; (2) that in the installation of any equipment at the Airport and the furnishing or services in connection therewith, no person on the grounds or race, color or national origin shall be excluded from participation in, denied the benefits of, or otherwise be subject to discrimination; and (3) that Concessionaire shall operate at the Airport in compliance with all other requirements imposed by or pursuant to Title 49, Code of Federal Regulations, Department of Transportation, Subtitle A, Office of the Secretary, Part 21, Non-discrimination in Federally assisted programs of the Department of Transportation-effectuation of Title VI of the Civil Rights Act of 1964, and as said Regulations may be amended. Likewise, Concessionaire shall comply with laws of the State of Florida, prohibiting discrimination because of race, color, religion, sex, national origin, age, handicap or marital status. Should Concessionaire authorize another person or entity, with Department's prior written consent, to provide services or benefits in or in connection with its rights or obligations under this Agreement, Concessionaire shall obtain from such person or entity a written agreement pursuant to which such person or entity shall, with respect to the services or benefits which it is authorized to provide,

undertake for itself the obligations contained in this paragraph. Concessionaire shall furnish the original or a true copy of such agreement to Department.

2. Concessionaire will provide all information and reports required by said Code of Federal Regulations, or by directives issued pursuant thereto, and shall permit access to its books, records, accounts, other sources of information, and its locations as may be determined by the Department or the Federal Aviation Administration to be pertinent to ascertain whether there has been compliance with said Regulations and directives. Where any information required of Concessionaire is in the exclusive possession of another who fails or refuses to furnish this information, Concessionaire shall so certify to Department or the Federal Aviation Administration, as appropriate, and shall set forth what efforts it has made to obtain the information.

3. In the event of a breach of any of the above nondiscrimination covenants, Department shall have the right to impose such contract sanctions as it or the Federal Aviation Administration may determine to be appropriate. Such rights shall include the right to terminate this Agreement and to reenter and repossess the Location and the improvements thereto, and hold the same as if this Agreement had never been made. The rights granted to Department by the foregoing sentence shall not be effective until the procedures of Title 49, Code of Federal Regulations, Part 21 are followed and completed, including exercise or expiration of appeal rights.

4. Concessionaire assures County that no person shall be excluded on the grounds or race, creed, color, national origin or sex from participating in or receiving the services or benefits of any program or activity covered by Title 14, Code of Federal Regulations, Part 152, Subpart E, Federal Aviation Administration, Nondiscrimination in Airport Aid Program, and that it will be bound by and comply with all other applicable provisions of such Subpart E, as it may be amended from time to time. Concessionaire also assures County that it will require its covered suborganizations to provide assurances to the same effect and provide copies thereof to the Department.

5. Concessionaire further assures County that it will comply with pertinent statutes, Executive Orders and such rules as are promulgated to assure that no person shall on the grounds of race, creed, color, national origin, sex, age or handicap be excluded from participating in any activity conducted at or in connection with its operations at the Location. Concessionaire also assures County that it will require its contractors to provide assurances to the same effect and ensure that such assurances are included in contracts and Lease agreements at all tiers which are entered into in connection with Concessionaire's services hereunder.

77

6. a) This Agreement is subject to the requirements of the U.S. Department of Transportation's regulations, 49 CFR Part 23, Subpart F. Concessionaire agrees that it will not discriminate against any business owner because of the owner's race, color, national origin, or sex in connection with the award or performance of any concession agreement covered by 49 CFR Part 23, Subpart F.

   b) Concessionaire agrees to include the above statements in any subsequent concession agreements that it enters and cause those businesses to similarly include the statements in further agreements.

7. County may from time to time be required by the United States Government or one or more of its agencies, to adopt additional or amended provisions including nondiscrimination provisions concerning the use and operation of the Airport, and Concessionaire agrees that it will adopt such requirements as part of this Agreement.

21.04 RIGHT TO MODIFY: The parties hereto covenant and agree that, during the Term and/or Extension, if applicable, this Agreement may be unilaterally modified by the Department, upon advice of its legal counsel, in order to conform to judicial or Federal Trade Commission or FAA rulings or opinions. This Sub-Article shall not preclude Concessionaire from contesting said rulings or opinions, but the Concessionaire shall abide by the unilateral change while such a challenge is pending. Except as otherwise specifically provided in this Agreement, this Agreement may not be modified except by a written instrument signed by both parties.

21.05 TAX EXEMPT STATUS OF DEPARTMENT REVENUE BONDS: The Concessionaire agrees to comply promptly with any applicable provisions of any federal tax statute, and all regulations or other binding authority promulgated or decided hereunder, as required to permit the Department's capital expansion projects to be planned and constructed by the Department with revenue bonds the interest on which is generally exempt from federal income taxation, other than any applicable individual or corporate alternative minimum taxes (and other than during any period while such revenue bonds are held by a "substantial user" of the projects financed by such revenue bonds or a "related person" to a "substantial user"), including, without limitation, the execution by the Concessionaire and delivery to the Department of an election not to claim depreciation or any investment credit with respect to any portion of such capital expansion projects or any other portion of the Airport System.

21.06 REMEDIES: All remedies provided in this Agreement shall be deemed cumulative and additional, and not in lieu of or exclusive of each other or of any other remedy available at law or in equity arising hereunder.

21.07 NOT USED

78

21.08 REGULATIONS OF DEPARTMENT: The rights and privileges granted to the Concessionaire hereunder and the occupancy and use by the Concessionaire of the Location shall at all times be subject to reasonable rules and regulations of Department as the same are now or may hereafter be prescribed through the lawful exercise of its power, including, but not limited to, all applicable provisions of Department's Policy and Procedures Manual as the same may be amended from time to time.

21.09 INTEREST: Any sums payable to the Department by the Concessionaire under any provisions of this Agreement, which may be amended from time to time, which are not paid when due shall bear interest at the rate of one and one half percent (1 1/2%) per month (or, if less, the maximum rate of interest allowed by law) from the due date thereof until paid.

21.10 MISCELLANEOUS PROVISIONS: The Concessionaire, and its agents, contractors, sub-contractors and/or employees shall promptly observe and comply with applicable provisions of all federal, State, and local statutes, ordinances, regulations and rules which govern or apply to the Concessionaire or to its services or operations hereunder.

1. The Concessionaire shall, at its own cost and expense, procure and keep in force during the Term and any Extension thereto if applicable, all necessary licenses, registrations, certificates, bonds, permits, and other authorizations as are required by law in order for the Concessionaire to provide its services hereunder and shall pay all taxes, (including sales and use taxes), assessments including, without limitation, storm water utility fees and impact fees which may be assessed, levied, exacted or imposed by all governmental authorities having jurisdiction on Concessionaire's property, on its services, on its Gross Revenues, on its income, on this Agreement and the fees payable to the County hereunder, on the rights and privileges granted to the Concessionaire herein, on the Location and on any and all equipment installed on the Location and the Concessionaire shall make and file all applications, reports, and returns required in connection therewith.

2. The Concessionaire agrees to repair promptly, at its sole cost and expense and in a manner acceptable to the Department, any damage caused by the Concessionaire or any of its officers, agents, employees, contractors, subcontractors, licensees or invitees to the Airport or any equipment or property located thereon.

3. The Concessionaire is not authorized to act as the County's agent hereunder and shall have no authority, express or implied, to act for or bind the County hereunder and nothing contained in this Agreement shall be deemed or construed by the County or the Concessionaire or by any third party to create the relationship of partnership or of joint venture. No provision of this Agreement shall be deemed to make the County the joint employer of any employee of the Concessionaire.

4 The County shall have the right during the Concessionaire's normal business hours (and at any time during an emergency) to inspect the Location and the property of the

Concessionaire located thereon, in order to enforce this Agreement, to enforce applicable laws and regulations, and to protect persons and property.

5. The Article and paragraph headings herein are inserted only as a matter of convenience and for reference, and in no way define, limit or describe the scope or intent of any provision of this Agreement.

6. Time is expressed to be the essence of this Agreement.

7. This Agreement will inure to the benefit of and shall be binding upon the parties hereto and their authorized successors and assigns.

8. If any covenant, condition or provision of this Agreement is held to be invalid by any court of competent jurisdiction, such holding shall not affect the validity of any other covenant, condition or provision contain herein.

9. Except as otherwise provide herein, if certain action may be taken only with the consent or approval of the County, or if a determination or judgment is to be made by the County, such consent or approval may be granted or withheld, or such determination or judgment shall be made, in the sole discretion of the County or the County.

10. The County's Ethics Commission has also adopted rules delineating the responsibilities of lobbyists and County personnel in implementing the requirements of the lobbying section of the Conflict of Interest and Code of Ethics Ordinance. The Proposer shall comply with these requirements.

21.11 FORCE MAJEURE: Strictly in relation to the obligations of each the other under this Agreement, and not for any other purpose or for any benefit of a third party, each party shall be excused from the timely performance of their respective obligations or undertakings provided in this Agreement, if the performance of such obligations or undertakings is prevented or delayed, retarded or hindered by strikes, lockouts, boycotts, actions of labor unions, labor disputes, labor disruptions, work stoppages or slowdowns, unless involving employees of the Concessionaire, embargo's, general shortages of labor, equipment, the Location, materials or supplies in the open market, acts of God, acts of the public enemy, acts of governmental authority, including, without limitation, the FAA, the DOT, the TSA, the EPA, the DOJ, or civil and defense authorities, extreme weather conditions, war (declared or undeclared), invasion, insurrection, terrorism, riots, rebellion or sabotage.

21.12 ENTIRE AGREEMENT: This Agreement, together with the Exhibits attached hereto, constitutes the entire agreement between the parties hereto with respect to the subject matter hereof, and any prior agreements, representations or statements made with respect to such subject matter, whether oral or written, and any contemporaneous oral agreements, representations or statements with respect to such subject matter, are merged herein;

provided, however, that Concessionaire hereby affirms the completeness and accuracy of the information provided by Concessionaire to County in their Proposal, and in all attachments thereto and enclosures therewith, submitted by Concessionaire to County in connection with the award of this Agreement. None of the provisions, terms or conditions contained in the Agreement may be modified or otherwise altered except as may be specifically authorized by **Sub-Article 18.04, Administrative Modifications**, or the Sub-Articles stated therein, or by written instrument executed by the parties hereto.

IN WITNESS WHEREOF, the parties hereto have caused this Agreement to be executed by their appropriate officials as of the date first above written.

CONCESSIONAIRE

Taxco Sterling Co.
(Legal Name of Corporation)

ATTEST:
~~Controller~~ ~~Secretary~~ Holly Solenberger
(Signature and Seal)

By: _____
Concessionaire - Signature

Holly Solenberger, Controller
(Type Name & Title)

Name: Sirilak Briggs
President
(Type Name & Title)

INDIVIDUAL, PARTNERSHIP OR JOINT VENTURE

_____
Legal Name

By: _____
Signature

_____
(Type Name & Title)

_____
Legal Name

By: _____
Signature

_____
(Type Name & Title)

Attest: _____

Name of Managing Joint Venturer:

_____

Witness: _____

By: _____
Signature of Authorized Representative of the Joint Venture

Corporate Seal

(ATTACH ADDITIONAL SHEETS FOR EACH JOINT VENTURER, AS NEEDED)

BOARD OF COUNTY COMMISSIONERS
MIAMI-DADE COUNTY, FLORIDA

By: _____
County Mayor

Approved for Form
and Legal Sufficiency

Attest: Harvey Ruvin, Clerk

_____
Assistant County Attorney

By: _____
Deputy Clerk

Resolution No.: _____

Date: _____

83

EXHIBIT A

LOCATIONS

PACKAGE 2

MIAMI INTERNATIONAL AIRPORT

RETAIL & FOOD AND BEVERAGE CONCESSIONS PROGRAM 2008

MDAD RFP 01-08

PACKAGE SUMMARY

UNIT #	TERMINAL	LOCATION	CONCEPT CATEGORY	PROPOSED CONCEPT	SIZE (SF)	AVAILABILITY
PACKAGE 1						
C.22.A	North	Zone C	Fashion Accessory	Sunglasses	718	Mid 2009
TOTAL PACKAGE 1					**718**	
PACKAGE 2						
C.42.A	North	Zone C	Jewelry, Watches	High End Jewelry	985	Mid 2009
TOTAL PACKAGE 2					**985**	
PACKAGE 3						
H3-FB02	South	South - 3rd Floor Intl.	Walkaway	Coffee Shop	700	End 2008
TOTAL PACKAGE 3					**700**	
TOTAL SQUARE FEET					**2,403**	

MIAMI INTERNATIONAL AIRPORT

RETAIL & FOOD AND BEVERAGE CONCESSIONS PROGRAM 2008

MDAD RFP 01-08

PACKAGE TWO

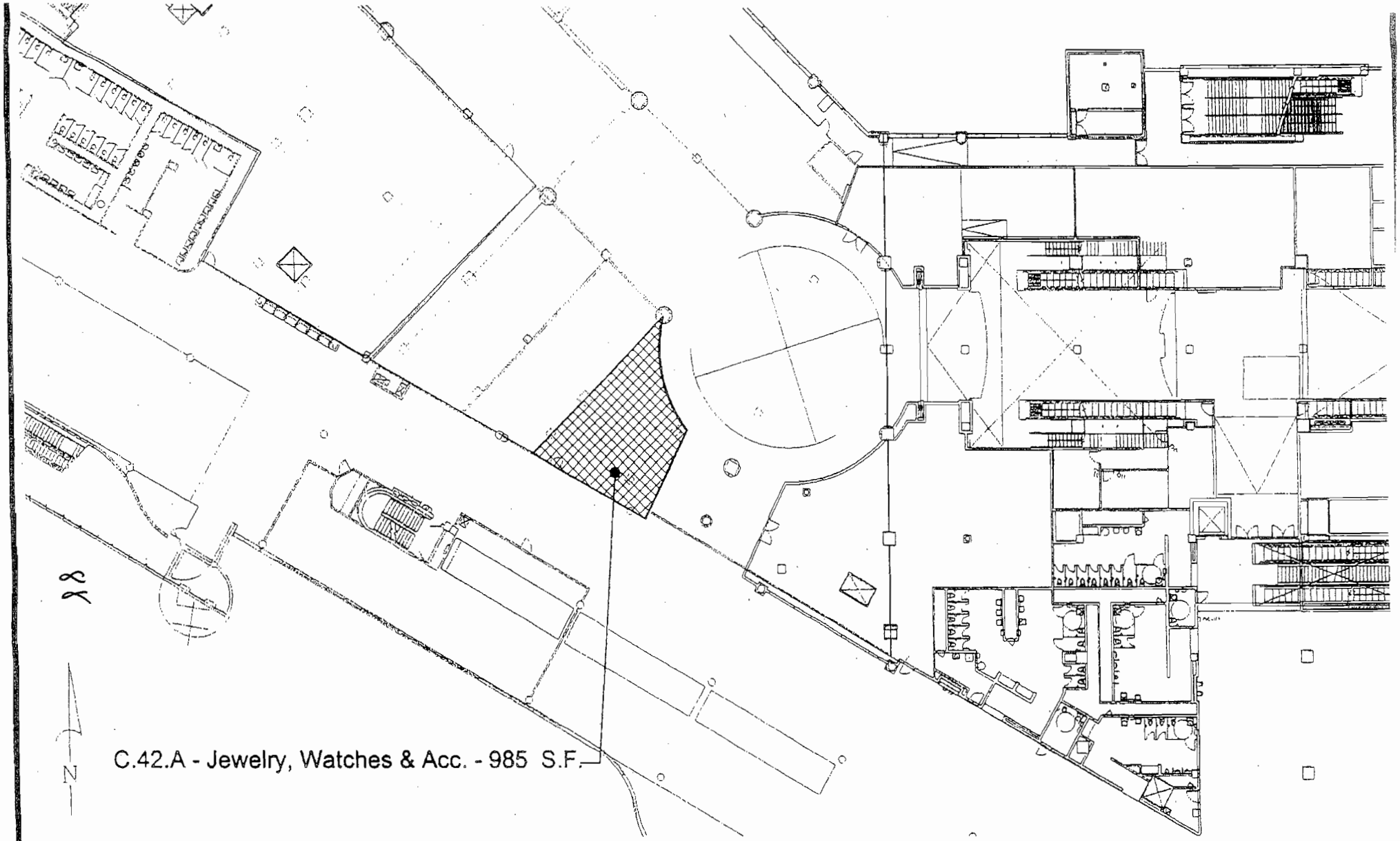

EXHIBIT "A" RETAIL RFP

LEGEND

Fashion Jewelry

MIAMI DADE AVIATION DEPARTMENT
MIAMI INTERNATIONAL AIRPORT
PROPOSED RETAIL CONCESSION
NORTH TERMINAL, ZONE C
Second Level
August, 2007

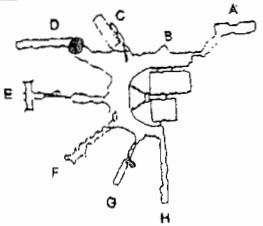

KEY MAP

TECHNICAL SUPPORT DIVISION

PROJECT FILE 60279

EXHIBIT B

SURETY PERFORMANCE AND PAYMENT BOND

EXHIBIT B

SURETY PERFORMANCE AND PAYMENT BOND

By this Bond, We, [CONCESSIONAIRE], as Principal, whose principal business address is [INSERT ADDRESS], as Developer under the contract dated , 200 , between Principal and Miami-Dade County for the development of the [IMPROVEMENTS] (hereinafter referred to as "Lease and Concession Agreement") the terms of which Lease and Concession Agreement are incorporated by reference in its entirety into this Bond, and We, _____,as Co-Principal, whose principal business address is _____, as Contractor under the contract dated , 200 , between Co-Principal and [CONCESSIONAIRE], for the construction of the [IMPROVEMENTS](hereinafter referred to as "Construction Contract") the terms of which Construction Contract are incorporated by reference in its entirety into this Bond and _____, a corporation, whose principal business address is _____ as Surety, are bound to Miami-Dade County (hereinafter referred to as "County") in the sum of _____ (U.S. dollars) $_____, for payment of which we bind ourselves, our heirs, personal representatives, successors, and assigns, jointly and severally.

THE CONDITION OF THIS BOND is that if Principal or Co-Principal:

1 . Performs all the work under the Construction Contract, including but not limited to guarantees, warranties and the curing of latent defects, said Construction Contract being made a part of this bond by reference, and in the times and in the manner prescribed in the Construction Contract, including any and all damages for delay; and

2. Promptly makes payments to all claimants, as defined in Section 255.05(1), Florida Statutes, supplying Principal or Co-Principal with labor, materials, or supplies, used directly or indirectly by Principal or Co-Principal in the prosecution of the work provided for in the Construction Contract; and

3. Pays County all losses, damages, including damages for delay, expenses, costs and attorney's fees, including appellate proceedings, that County sustains because of a default by Principal or Co-Principal under the Construction Contract, including but not limited to a failure to honor all guarantees and warranties or to cure latent defects in its work or materials within 5 years after completion of the work under the Construction Contract; and

4. Performs the guarantee of all work and materials furnished under the Construction Contract for the time specified in the Construction Contract, including all warranties and curing all latent defects within 5 years after completion of the work under the Construction Contract; then this bond is void; otherwise it remains in full force.

If no specific periods of warranty are stated in the Construction Contract for any particular item or work, material or equipment, the warranty shall be deemed to be a period of one (1) year from the date of final acceptance by the County. This Bond does not limit the County's ability to pursue suits directly with the Principal or Co-Principal seeking damages for latent defects in

SURETY PERFORMANCE AND PAYMENT BOND (Cont'd)

materials or workmanship, such actions being subject to the limitations found in Section 95.11, Florida Statutes.

Any changes in or under the Contract Documents and compliance or noncompliance with any formalities connected with the Construction Contract or the changes does not affect Surety's obligation under this Bond.

IN WITNESS WHEREOF, the above bounden parties have caused this Bond to be executed by their appropriate officials as of the _____ day of _____, 20 __.

CONCESSIONAIRE

_____

[CONCESSIONAIRE]

BY:

_____

(President) (Managing Partner or Joint Venturer)

CONTRACTOR

_____

(Contractor Name)

BY:

_____

(President) (Managing Partner or Joint Venturer)

(SEAL)

SURETY PERFORMANCE AND PAYMENT BOND (Cont'd)

COUNTERSIGNED BY RESIDENT
FLORIDA AGENT OF SURETY:

SURETY:

_____

(Copy of Agent's current
Identification Card as issued by
State of Florida Insurance Commissioner must be attached)

By: _____
Attorney-in-Fact

(CORPORATE SEAL)

(Power of Attorney must be attached)

EXHIBIT C-1
(formerly APPENDIX J-1)

MIAMI-DADE COUNTY
MIAMI-DADE AVIATION DEPARTMENT SINGLE EXECUTION AFFIDAVITS

APPENDIX J-1
MIAMI-DADE COUNTY
MIAMI-DADE AVIATION DEPARTMENT SINGLE EXECUTION AFFIDAVITS

This sworn statement is submitted for:

PROJECT TITLE Package Two High End Jewelry

PROJECT NUMBER MDAD 01-08

COUNTY OF Miami-Dade

STATE OF Florida

Before me the undersigned authority appeared Sirilak Briggs (Print Name), who is personally known to me or who has provided as identification and who (did or did not) take an oath, and who stated:

That he/she is the duly authorized representative of

Taxco Sterling Company, Inc.
(Name of Entity)

10282 Johns Hollow Road, Vienna, VA 22182
(Address of Entity)

5 / 2 - 9 / 4 / 0 / 3 / 5 / 8 /
Federal Employment Identification Number

hereinafter referred to as the Entity being its

President
(Sole Proprietor)(Partner)(President or Other Authorized Officer)

and as such has full authority to make these affidavits and say as follows.

PUBLIC ENTITY CRIMES
SWORN STATEMENT UNDER SECTION 287.133(3)(a), FLORIDA STATUTES

1. I understand that a "public entity crime" as defined in Paragraph 287.133(1)(g), **Florida Statutes**, means "a violation of any state or federal law by a person with respect to and directly related to the transaction of business with any public entity or with an agency or political subdivision of any other state or with the United States, including, but not limited to any bid, proposal, reply, or contract for goods or services, any lease for real property, or any contract for the construction or repair of a public building or public work, involving antitrust, fraud, theft, bribery, collusion, racketeering, conspiracy, or material misrepresentation."

2. I understand that "convicted" or "conviction" as defined in Paragraph 287.133(1)(b), **Florida Statutes**, means "a finding of guilt or a conviction of a public entity crime, with or without an adjudication of guilt, in any federal or state trial court of record relating to charges brought by indictment or information after July 1, 1989, as a result of a jury verdict, nonjury trial, or entry of a plea of guilty or nolo contendere."

3. I understand that an "affiliate" as defined in Paragraph 287.133(1)(a), **Florida Statutes**, means:

"1 A predecessor or successor of a person convicted of a public entity crime; or

2. An entity under the control of any natural person who is active in the management of the entity and who has been convicted of a public entity crime. The term "affiliate" includes those officers, directors, executives, partners, shareholders, employees, members, and agents who are active in the management of an affiliate. The ownership by one person of shares constituting a controlling interest in another person, or a pooling of equipment or income among persons when not for fair market value under an arm's length agreement, shall be a prima facie case that one person controls another person. A person who knowingly enters into a joint venture with a person who has been convicted of a public entity crime in Florida during the preceding 36 months shall be considered an affiliate."

4. I understand that a "person" as defined in Paragraph 287.133(1)(e), **Florida Statutes**, means "any natural person or entity organized under the laws of any state or of the United States with the legal power to enter into a binding contract and which bids or applies to bid on contracts let by a public entity, or which otherwise transacts or applies to transact business with a public entity. The term "person" includes those officers, directors, executives, partners, shareholders, employees, members and agents who are active in management of an entity."

5. The statement which is marked below is true in relation to the Entity submitting this sworn statement. **[Please indicate which statement applies.]**

PUBLIC ENTITY CRIMES
SWORN STATEMENT UNDER SECTION 287.133(3)(a), FLORIDA STATUTES (Cont'd)

__X__ Neither the Entity submitting this sworn statement, nor any officers, directors, executives, partners, shareholders, employees, members, or agents who are active in management of the Entity, nor any affiliate of the Entity have been charged with and convicted of a public entity crime subsequent to July 1, 1989.

_____ The Entity submitting this sworn statement, or one or more of the officers, directors, executives, partners, shareholders, employees, members, or agents who are active in management of the Entity, or an affiliate of the Entity has been charged with and convicted of a public entity crime subsequent to July 1, 1989. **[Please indicate which additional statement applies.]**

_____ There has been a proceeding concerning the conviction before a hearing officer of the State of Florida, Division of Administrative Hearings. The final order entered by the hearing officer did not place the person or affiliate on the convicted vendor list. **[Please attach a copy of the final order.]**

_____ The person or affiliate was placed on the convicted vendor list. There has been a subsequent proceeding before a hearing officer of the State of Florida, Division of Administrative Hearings. The final order entered by the hearing officer determined that it was in the public interest to remove the person or affiliate from the convicted vendor list. **[Please attach a copy of the final order.]**

_____ The person or affiliate has been placed on the convicted vendor list. **[Please describe any action taken by or pending with the Florida Department of Management Services.]**

CRIMINAL RECORD AFFIDAVIT PURSUANT TO SECTION 2-8.6 OF THE MIAMI-DADE COUNTY CODE

Pursuant to Section 2-8.6 of the Code, the Entity must disclose, at the time the submission, if the Entity or any of its officers, directors, or executives have been convicted of a felony during the past (10) years. Failure to disclose such conviction may result in the debarment of the Entity who knowingly fails to make the required disclosure or to falsify information.

Indicate below if the above named Entity, as of the date of submission:

__X__ has not been convicted of a felony during the past ten (10) years, nor does it, as of the date of submission, have an officer, director or executive who has been convicted of a felony during the past ten (10) years.

_____ has been convicted of a felony during the past ten (10) years, or as of the date of submission, has an officer, director or executive who has been convicted of a felony during the past ten (10) years.

MIAMI-DADE COUNTY WORK HISTORY DISCLOSURE

LIST ALL CONTRACTS IN EFFECT WITH MIAMI-DADE COUNTY DURING THE LAST FIVE (5) YEARS:

CONTRACT DATE	DOLLAR AMOUNT OF ORIG.CONTRACT	FINAL AMT. OF CONTRACT	PERCENTAGE DIFFERENTIAL
(1)			
12/2006 - 9/2010	$ 375,000	$ 375,000	0 %

Name of Dept. & Summary of Services Performed: Miami Dade County Aviation Department — high end jewelry, watches, accessories

Taxco Sterling Co., Inc., Miami International Airport

Central Terminal, Miami, FL

Litigation Arising out of Contract: N/A

CONTRACT DATE	DOLLAR AMOUNT OF ORIG.CONTRACT	FINAL AMT. OF CONTRACT	PERCENTAGE DIFFERENTIAL
(2)			
9/2008-9/2014	$ 755,640	$ 755,640	0 %

Name of Dept. & Summary of Services Performed: Miami-Dade Aviation Department; high end jewelry, watches, accessories; Taxco Sterling Co., Inc., Miami International Airport; South Terminal, Miami, FL

Litigation Arising out of Contract: N/A

(3)

	$	$	%

Name of Dept. & Summary of Services Performed:

Litigation Arising out of Contract:

(ADD EXTRA SHEET(S) IF NEEDED.)

A. How long has Entity been in business? 12 years

B. Has the Entity or the principals of the Entity ever done business under another name or with another firm? No

This single execution shall have the same force and effect as if each of the above affidavits had been individually executed.

(Signature of Authorized Representative)

Title President

Date 9-8-08

STATE OF:

COUNTY OF:

The above affidavits were acknowledged before me this 8th day of September, 2008

by _____,
(Authorized Representative)

of _____
(Name of Corporation, Partnership, etc.)

who is personally known to me or has produced as identification and who did/did not take an oath.

_____
(Signature of Notary)

Andrew Nosar.
(Print Name)

Notary Commission Number: 6-30-2009

My Commission Expires: 354963

Notary Stamp or Seal:

Andrew Nosar
Notary Public
Commonwealth of Virginia
My Commission Expires 6-30-2009
Commission ID# 354963

EXHIBIT C-2

(formerly APPENDIX J-2)

MIAMI-DADE COUNTY

MIAMI-DADE AVIATION DEPARTMENT SINGLE EXECUTION

CONDITION OF AWARD REQUIREMENTS

APPENDIX J-2

MIAMI-DADE COUNTY
CONDITION OF AWARD REQUIREMENTS

The following pages are provided for the Proposer's convenience and are a prerequisite to a contract award:

- Affirmation of Vendor Affidavits
- Subcontractor/Supplier Listing
- Subcontracting Policies Statement
  (Also required, but no format (insert page is provided))
- Proof of Authorization to do Business
  (Attach a copy of the Certificate of Status or Authorization per 607.0128 F.S., and certificate evidencing compliance with the
  Florida Fictitious Name Statute per 865.09 F.S., if applicable.)
  (Also required, but no format (insert page is provided))

Miami-Dade County

Affirmation of Vendor Affidavits

In accordance with Ordinance 07-143 amending Section 2-8.1 of the Code of Miami-Dade County, effective June 1, 2008, vendors are required to complete a *new* Vendor Registration Package, including a Uniform Affidavit Packet (Vendor Affidavits Form), before being awarded a new contract. The undersigned affirms that the Vendor Affidavits Form submitted with the Vendor Registration Package is current, complete and accurate for each affidavit listed below.

Contract No. _____ **Federal Employer Identification No. (FEIN):** _____

Contract Title: _____

Affidavits and Legislation/Governing Body

1.	***Miami-Dade County Ownership Disclosure*** *Sec. 2-8.1 of the County Code*	6.	***Miami-Dade County Vendor Obligation to County*** *Sec. 2-8.1 of the County Code*
2.	***Miami-Dade County Employment Disclosure*** *County Ordinance No. 90-133, amending Section 2.8-1(d)(2) of the County Code*	7.	***Miami-Dade County Code of Business Ethics*** *Article 1, Section 2-8.1(i) and 2-11(b)(1) of the County Code through (6) and (9) of the County Code and County Ordinance No. 00-1 amending Section 2-11.1 (c) of the County Code*
3.	***Miami-Dade County Employment Drug-free Workplace Certification*** *Sec. 2-8.1.2(b) of the County Code*	8.	***Miami-Dade County Family Leave*** *Article V of Chapter 11 of the County Code*
4.	***Miami-Dade County Disability Non-Discrimination*** *Article 1, Section 2.8.1.6 Resolution R182-00 amending R-385-95*	9.	***Miami-Dade County Living Wage*** *Sec. 2-8.9 of the County Code* **(If applicable)**
5.	***Miami-Dade County Debarment Disclosure*** *Section 10-38 of the County Code*	10.	***Miami-Dade County Domestic Leave and Reporting*** *Article 8, Section 11A-60, 11A-67 of the County Code*

_____ _____

Printed Name of Affiant Printed Title of Affiant

_____ _____

Signature of Affiant Name of Firm

_____ _____

Date Address of Firm (include State, Zip Code)

Notary Public Information

Notary Public – State of _____ **County of** _____

Subscribed and sworn to (or affirmed) before me this _____ **day of,** _____ **20**_____

by _____ **He or she is personally known to me** ☐ **or has produced I.D.** ☐

Type of identification produced _____

_____ _____ _____

Signature of Notary Public **Serial Number** **Print or Stamp of Notary Public**

_____ _____

Expiration Date **Notary Public Seal**

102

SUBCONTRACTOR/SUPPLIER LISTING
PURSUANT TO SECTION 10-34 OF THE CODE

Firm Name of Prime Entity/Respondent: _____ Project No._____

Project Name: _____

Business Name and Address of First tier Subcontractor/Subconsultant	Principal Owner	Scope of Work to be Performed by Subcontractor/Subconsultant	Subcontractor/ Subconsultant Dollar Amount	(Principal Owner) Gender Race	
Business Name and Address of Direct Supplier	**Principal Owner**	**Supplies/Materials/Services to be Provided by Supplier**	**Supplier Dollar Amount**	**(Principal Owner) Gender Race**	

I certify that the certifications contained in this Subcontractor/Supplier Listing are to the best of my knowledge true and accurate

_____ _____ _____ _____

Prime Entity/Respondent Signature Print Name Print Title Date

(Duplicate if additional space is needed)

103

SUBCONTRACTING POLICIES STATEMENT PURSUANT TO SECTION 2-8.8(4) OF THE CODE

(Insert Here)

PROOF OF AUTHORIZATION TO DO BUSINESS

(Attach a copy of the Certificate of Status or Authorization per 607.0128 F.S., and certificate evidencing compliance with the Florida Fictitious Name Statute per 865.09 F.S., if applicable.)

(Insert Here)

EXHIBIT D

PERFORMANCE BOND FOR MAG REQUIREMENTS

Bond No._____

PERFORMANCE BOND FOR MAG REQUIREMENTS

KNOW ALL MEN BY THESE PRESENTS, that we, _____ _____ as Principal, and _____ licensed to do business in the State of Florida as Surety, are held and firmly bound unto Miami-Dade County (Obligee), in the penal sum of _____ _____, $_____(words and figures) of the Minimum Annual Guarantee as required in Section 3.01 of the Lease and Concession Agreement entitled "Minimum Annual Guarantee", for the payment of which sum well and truly to be made, the Principal and Surety bind themselves, their heirs, executors, administrators, and successors and assigns, jointly and severally, firmly by these presents.

THE CONDITION OF THIS OBLIGATION IS SUCH that whereas by Concession Agreement dated _____, Obligee has granted unto said Principal the right to operate an _____ at Miami International Airport and more fully described in said Lease and Concession Agreement for a term as set forth in said Agreement, a copy of which is attached, which Agreement is made a part hereof and incorporated herein by reference.

NOW, THEREFORE, if Principal, its executors, administrators, successors and assigns shall promptly and faithfully perform the Lease and Concession Agreement, according to the terms, stipulations of conditions thereof, then this obligation shall become, null and void; otherwise to remain in full force and effect.

Provided, however, this bond shall be in full force and effect for the term commencing _____ and ending _____but may be renewed annually thereafter by the principal with written consent of the Surety by issuing a Continuation Certificate no later than thirty (30) days prior to the renewal date.

Provided further, however, that regardless of the number of years this bond may be in force, the aggregate liability of the Surety shall not be cumulative and is limited to the stated penal sum.

Provided further, however, that in the event the bond is not renewed, the liability of the Surety shall be limited to the actual damages sustained by the Obligee due to lack of performance of the Principal during the effective term of the bond. The Surety shall not be held liable for any contract period beyond which it consents to in writing, as defined in the Lease and Concession Agreement in Section 3.01 "Minimum Annual Guarantee", and Section 3.11 "MAG Performance Bond".

IN WITNESS WHEREOF, the above bounden parties have executed this instrument under their several seals, this ____ day of _____ the name and corporate seal of each corporate party being hereto affixed and these presents duly signed by its undersigned representative, pursuant to authority of its governing body.

In The Presence Of:

_____ _____(Seal)

Witness By:_____

Witness: Surety:

_____ _____(Seal)

 By: _____

EXHIBIT E

CONCESSIONS DESIGN GUIDELINES

RETAIL CONCESSIONS DESIGN GUIDELINES

north terminal

January 5, 2005

MIAMI INTERNATIONAL AIRPORT

Welcome Letter..... 3
Plan..... 6
Design Principles..... 11
General Criteria..... 18
Storefront and Signage Diagrams..... 20
Tenant Sign Criteria..... 28
Self-Contained Merchandising Units..... 30
Food and Beverage..... 32
Mechanical, Electrical and Plumbing Requirements..... 33
Submittal Process..... 35
Submittal Review Process Chart..... 36
General Conditions..... 38
Submittal Requirements..... 39

Welcome to the Miami International Airport family. In the pages that follow, the Miami Dade Aviation Department (MDAD) has set forth its vision and goals for the North Terminal to assure achievement of the highest possible quality. This process of working jointly as a team focused on a single outcome should be rewarding to all team members. These thoughts have guided the development of the Retail Concession Design Guidelines for Miami International Airport. Concessionaires/Tenants will benefit greatly from an understanding of the quality standards as set forth in this document. The purpose is for the best possible finished project to be achieved.

The four cornerstones upon which all MDAD business activities are based are:

- Safety and Security
- Customer Service
- Economic Vitality
- Environmental Responsibility

The Design Principles set forth in this document:

- Demonstrate a commitment to quality in the development of the retail and public areas within the existing Central Terminal and in the new North and South Terminals.
- Guide the Concessionaires/Tenants to quality design solutions, resulting in a world class shopping experience for the Miami International Airport traveler and visitor.
- Provide visual analogies, examples and metaphors to illustrate the stated principles, all without inhibiting the Tenant's ability to incorporate its unique design and operating philosophy on the completed project. It is not the MDAD's intent to design these areas.
- Create the assessment tool for use in reviewing design proposals from prospective Tenants.

It must be understood that MDAD will work in close collaboration with the selected Tenants to properly interpret these guidelines, while retaining control of the design process. This collaboration and interpretation will apply to both the common areas and the tenant storefronts and interiors that fall within the agreement terms.

MDAD looks forward to working with a talented team to develop an exciting concession program, one that reflects the extraordinary Greater Miami Dade community.

Miami's North Shops will exceed the expectations of arriving travelers by creating an environment befitting the airport's position as the Southern Hemisphere's premier portal to Miami, south Florida and the United States. For others, Miami International's North Terminal is the gateway to Latin America. The North Shops retail district will feel at once familiar and fresh to the visitor, reflecting the warmth, style, culture and diversity of classic Miami.

The goal in creating this retail area is to enhance and complement the new architectural character of the North Terminal. The Miami Dade Aviation Department (MDAD), along with its planners, architects and designers, is mindful of the rigorous operational and functional challenges associated with airport operations everywhere. Miami International Airport's Design Guidelines address these challenges to ensure that the North Shops accomplish the concession objectives within the framework of the essentials of the architecture.

The North Shops will offer marked advantages to Tenants. The North Shops truly live up to the axiomatic "location, location, location." After clearing the new state of the art security checkpoints, virtually every passenger will get full views of the North Shops as they walk to their concourse and gate. This will afford retailers and food and beverage operators an unimpeded opportunity to display a variety of retail and food service offerings.

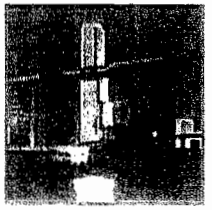

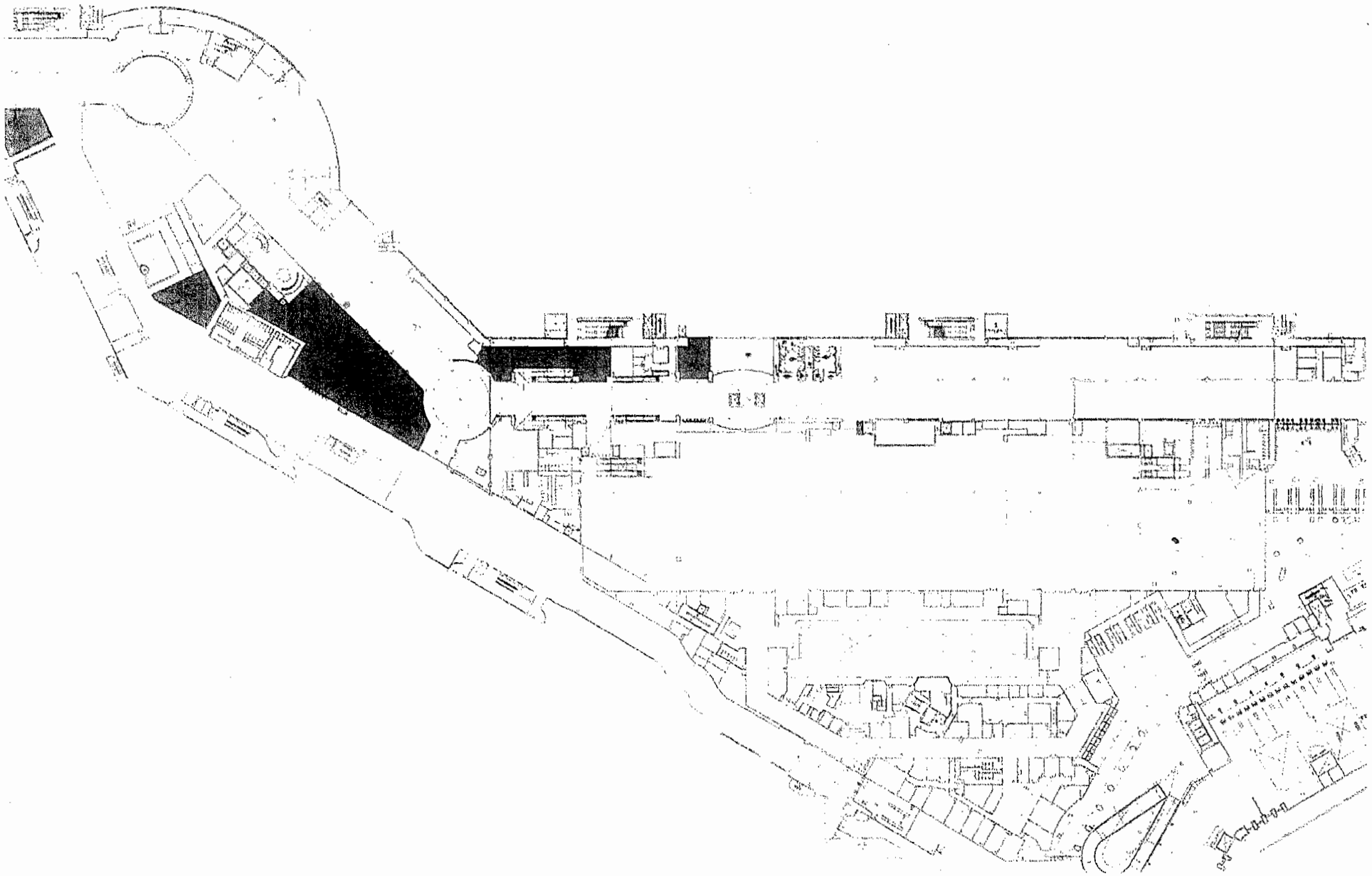

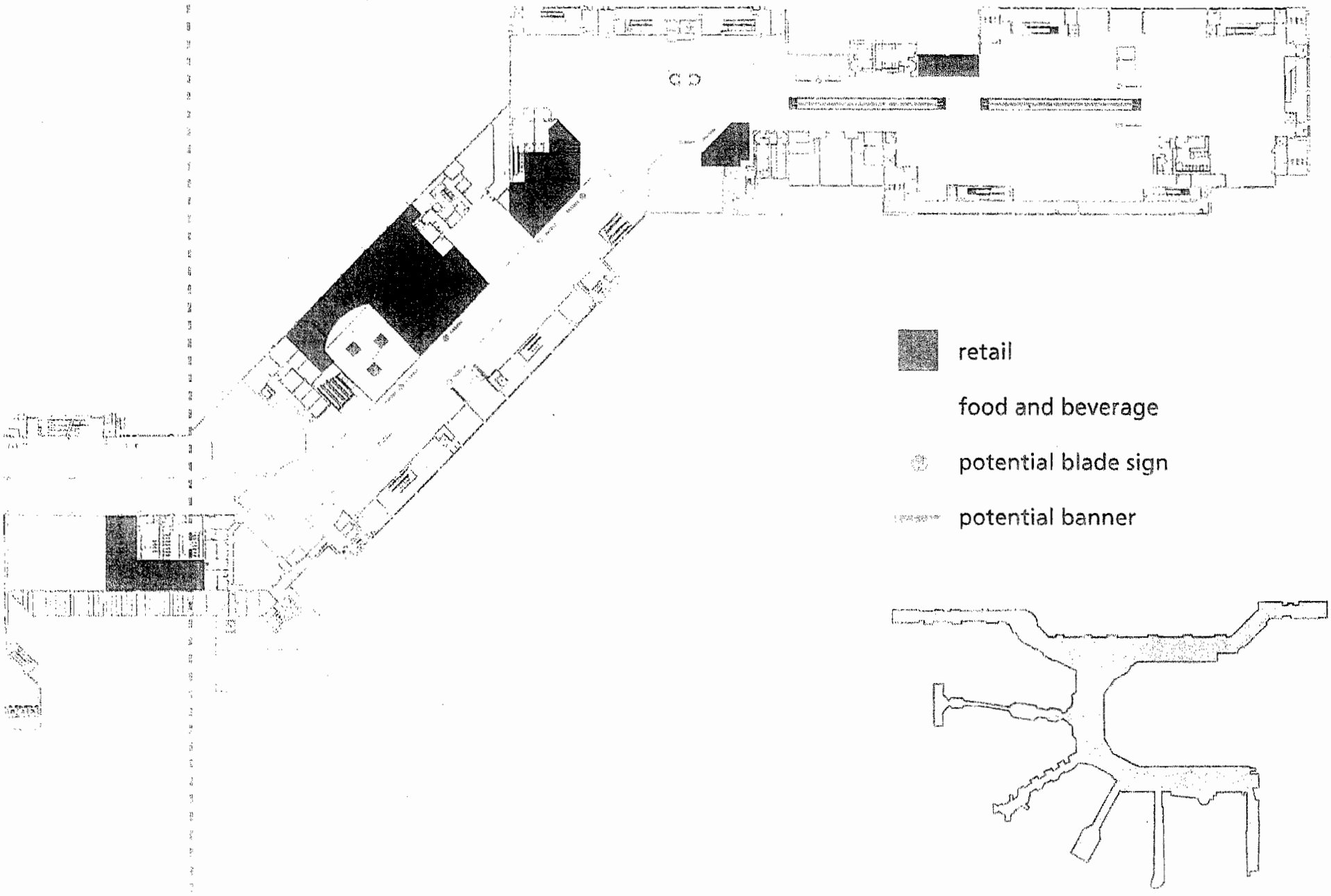
retail
food and beverage
potential blade sign
potential banner

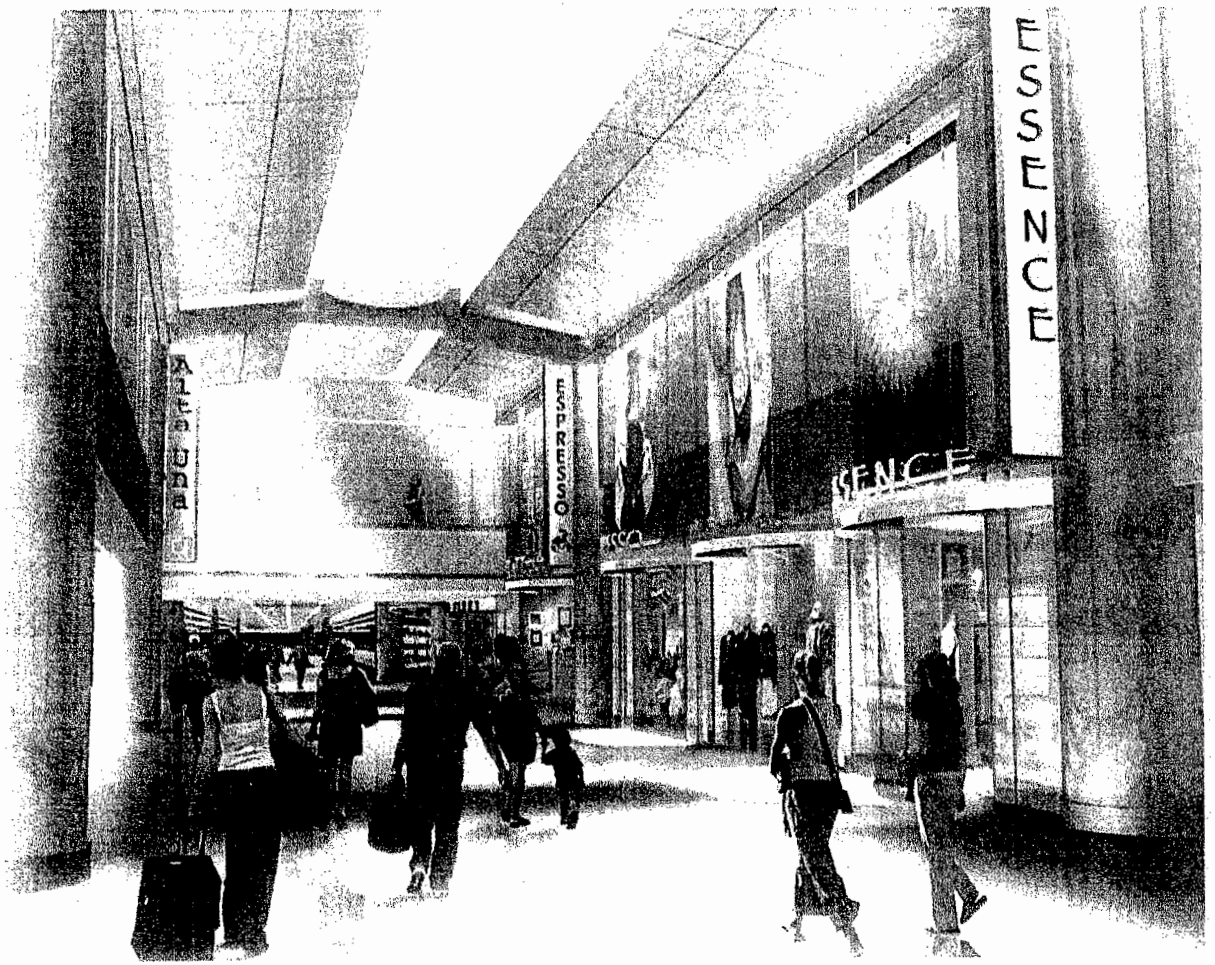

DESIGN PRINCIPLES

Maximize tenant storefront height within building structure.

Increase tenant impact and perceived storefront height by utilizing upper level building surfaces for tenant identity.

Maximize opportunities for tenant brand expression/advertising.

Manage overall quality of North Terminal shops by harmonizing vocabulary of tenant expressions without compromising national or regional tenant brand recognition.

Large scaled, glowing perpendicular signs carry tenant names, colors and logo.

Large scaled, full color tenant imagery over storefronts promotes tenant brand expression and advertising.

Maximize tenant storefront visibility and tenant graphic/display flexibility.

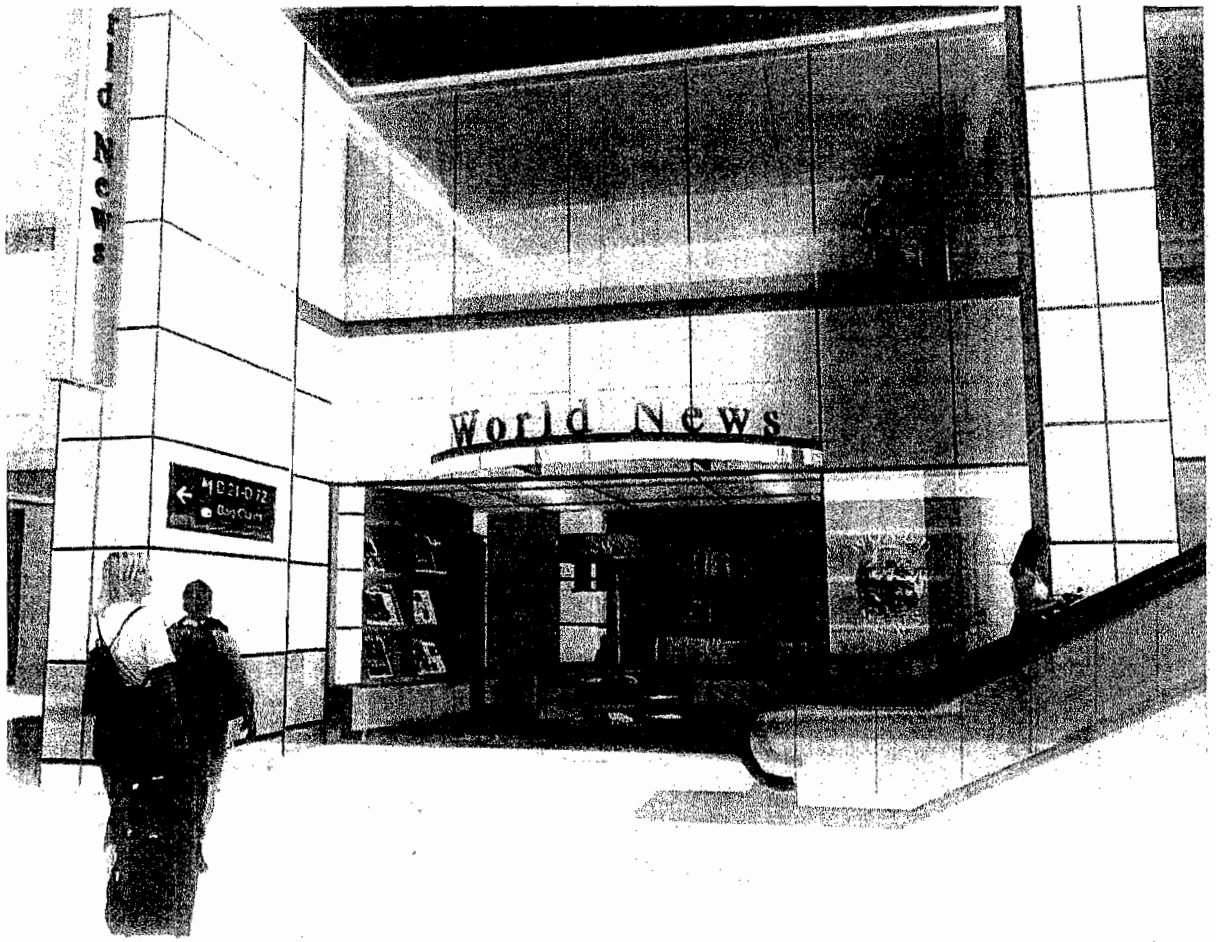

STRIVING TO...

the expectations of arriving travelers by creating an environment befitting of the airport's position as the portal to Miami. The new area should feel at once familiar and fresh and it should reflect the warmth, sensibility and diversity of classic Miami.

entertain and capitalize on the travelers with long layovers and the exceptionally large numbers of "greeters" present at the airport.

an environment with long-term viability that is attractive to world class retailers while supportive of the unique demands of airport retail.

these objectives without revisiting the essentials of the architecture already in place.

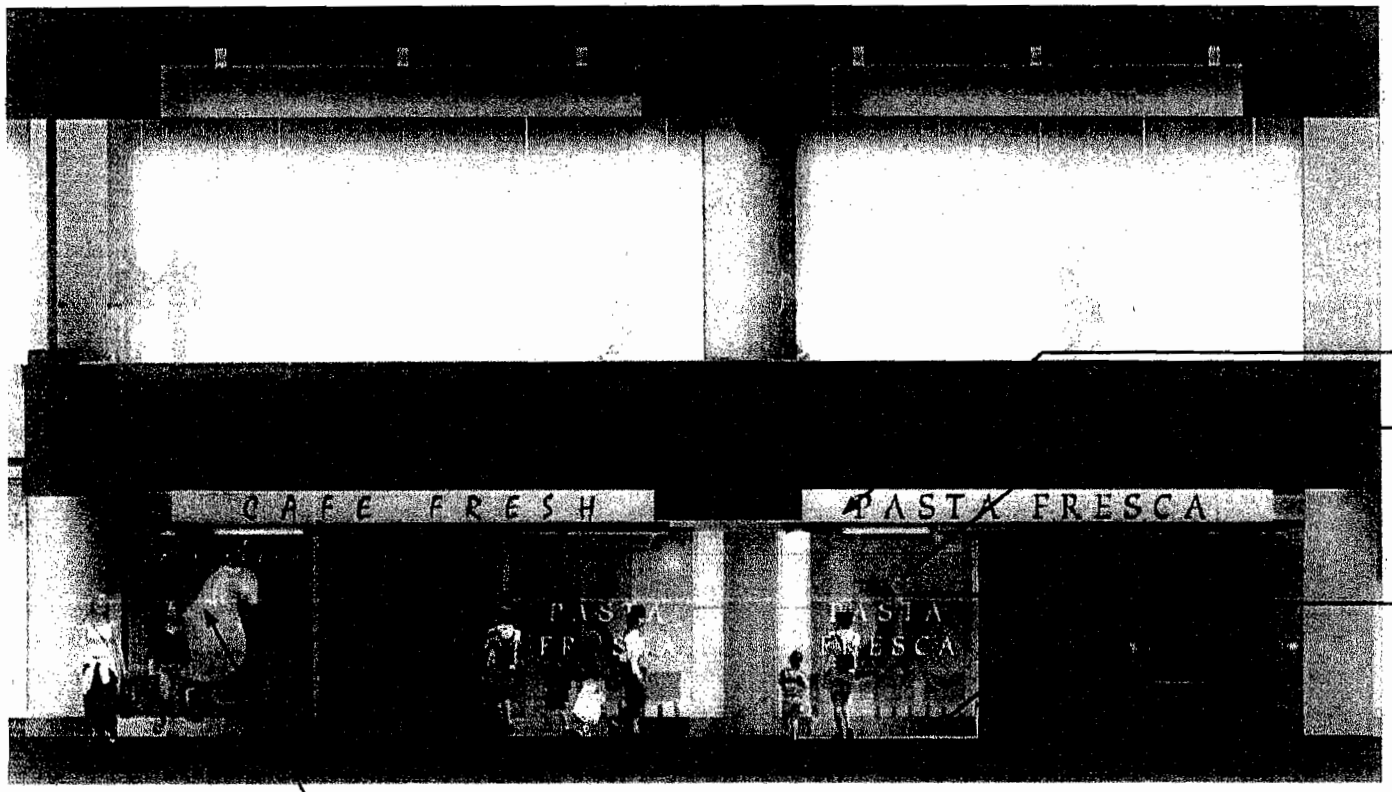

Fascia Identity sign

Large graphic image as secondary tenant identity

10" brushed stainless steel base

Opaque digital graphic image applied to second surface of glazing to conceal closure system or existing building opaque walls

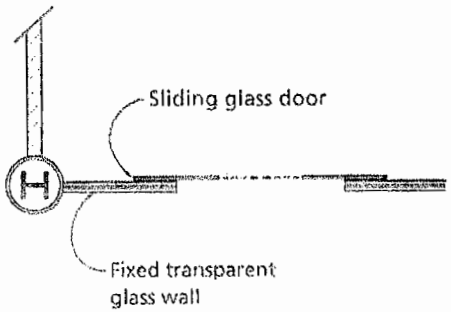
Sliding glass door
Fixed transparent
glass wall

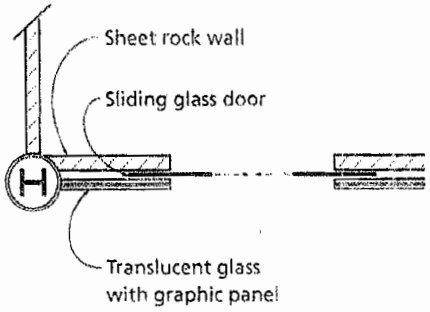
Sheet rock wall
Sliding glass door
Translucent glass
with graphic panel

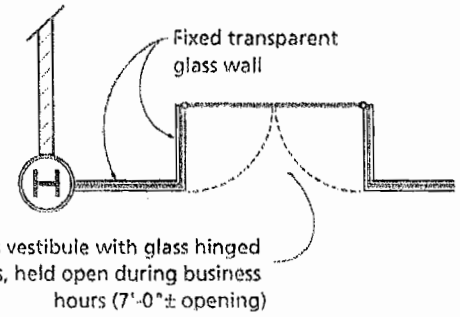
Fixed transparent
glass wall
Glass vestibule with glass hinged
doors, held open during business
hours (7'-0"± opening)

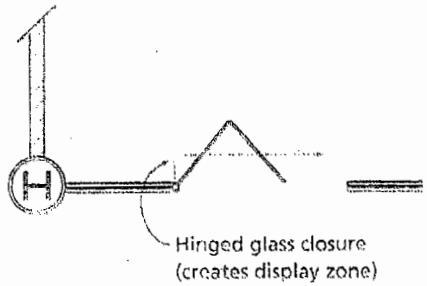
Hinged glass closure
(creates display zone)

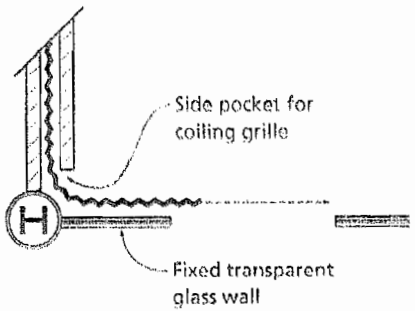
Side pocket for
coiling grille
Fixed transparent
glass wall

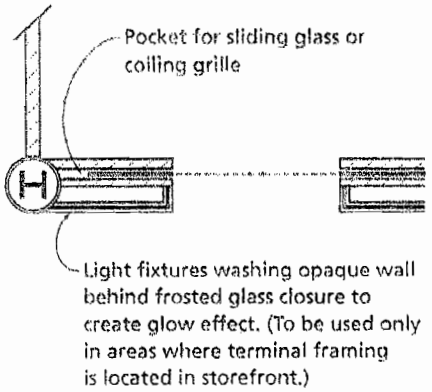
Pocket for sliding glass or
coiling grille
Light fixtures washing opaque wall
behind frosted glass closure to
create glow effect. (To be used only
in areas where terminal framing
is located in storefront.)

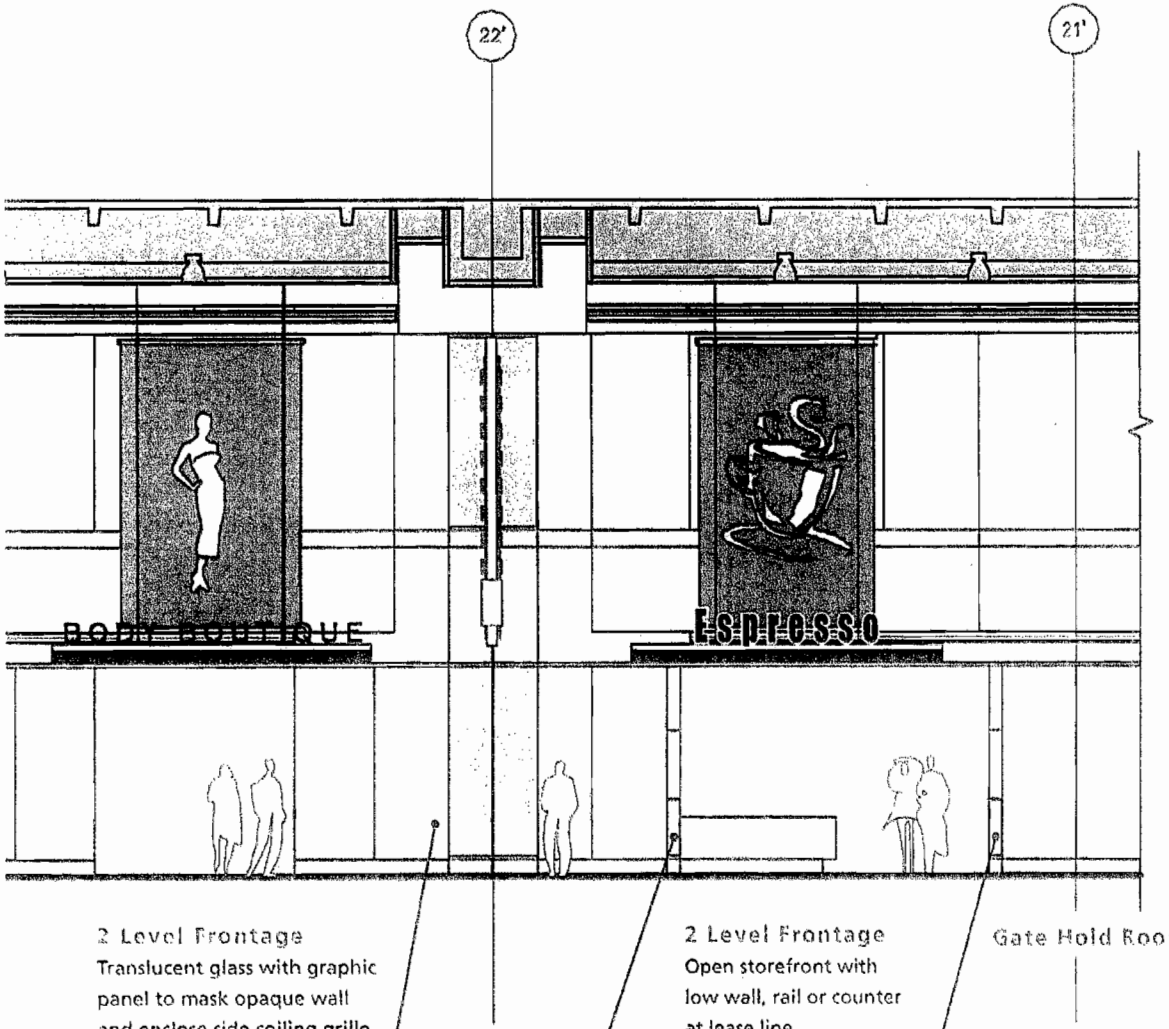

2 Level Frontage
Translucent glass with graphic panel to mask opaque wall and enclose side coiling grille

2 Level Frontage
Open storefront with low wall, rail or counter at lease line

Gate Hold Room

Transparent glass display window

Pilaster by Tenant

Pilaster by Tenant

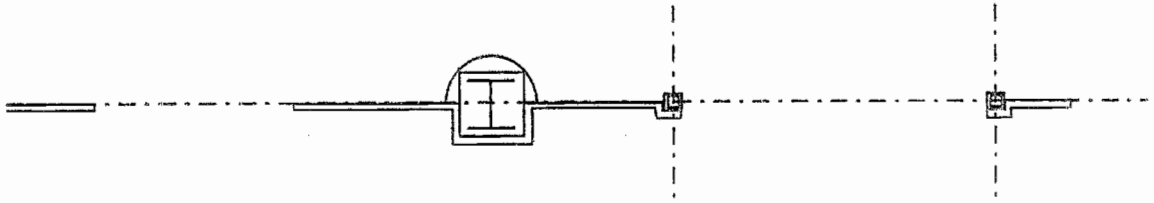

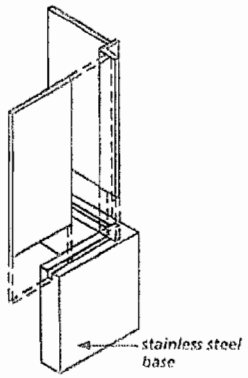

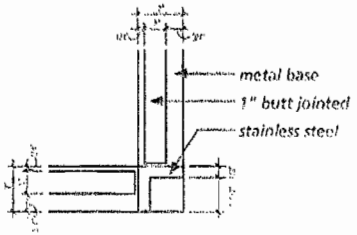

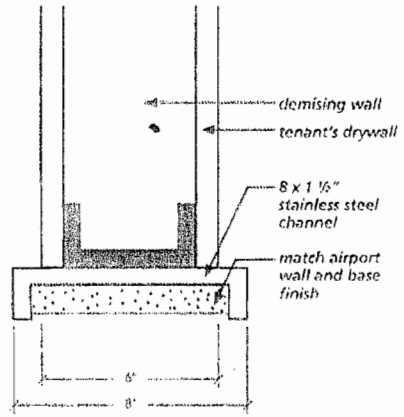

GENERAL NOTES

1. ALL EXPOSED OPAQUE SURFACES NOTED AS "SILVER" TO BE PAINTED MATTHEWS "BRUSHED ALUMINUM".
2. BANNER IS TO BE 4 MIL VINYL MESH SCRIM MATERIAL PRINTED ON BOTH FACES. THE IMAGE ON THE BACK FACE OF THE BANNER IS TO BE PRINTED IN REVERSE SUCH THAT THE TWO IMAGES ARE REGISTERED WITHIN 1/4" OF EACH OTHER.
3. EXTERNAL ILLUMINATION SOURCES SHALL BE EITHER A) LIGHTING SERVICES, INC. M1003 SERIES, PAR 20 LIGHT FIXTURE MOUNTED TO TRACK WITH A 00 TRACK FITTING IN A SILVER FINISH; OR B) HALO LIGHTING LS300 MINILUME ADJUSTABLE METAL HALIDE IN A SILVER FINISH. PROVIDE FIVE FIXTURES PER SIGN: TWO DIRECTED AT FLOOR IN FRONT OF TENANT'S ENTRY, THREE DIRECTED AT SCRIM BANNER ABOVE.
4. LIGHT FIXTURES MUST USE 35 WATT PHILIPS MASTER COLOR METAL HALIDE LAMPS AND HAVE REMOVABLE COLORED GEL LENSES TO ALLOW TENANTS THE OPTION OF CASTING COLORED LIGHT ONTO THE FLOOR AT THEIR ENTRIES.
5. ALL WIRE ROPE HARDWARE SHALL BE JAKOB INOX LINE OR APPROVED EQUAL.
6. BRAND ID GRAPHICS IS THE PREFERRED FABRICATOR OF THE BANNERS. THE SPECS OF THE SUPERFLEX MESH MATERIAL ARE AS FOLLOWS: ULTRA WHITE, 9OZ. DOUBLE SIDED PRINT MESH WITH A FLAT SURFACE (FRONT AND BACK), 1000 DENIER, 80 X 60 LB. TEAR STRENGTH, NFPA-701 FIRE TEST PASS, PRE-WASH – ISOPROPYL 90% 2 SIDES.
7. THE ART MUST BE A MIRROR IMAGE 4" OF FRONT IMAGE TO BACK POCKETS FOR IMAGE TRANSITION WHEN POCKETS ARE FOLDED FOR SEAMING.
8. THE PRINTING PROCESS WILL BE ELECTRO DOT PLACEMENT WITH FULL SOLVENT INK.
9. THE FINISHING WILL CONSIST OF 4" POLEPOCKETS AT THE TOP AND BOTTOM WITH A LEISTER SEAMER 1" SURFACE WELDER AND THE SEAM EDGE MUST BE REINFORCED WITH BANNER STAPLES (1 IN EACH CORNER). THIS SHOULD BE SHIPPED ON A ROLL SO THAT NO FOLDS ARE CREATED IN THE BANNER.

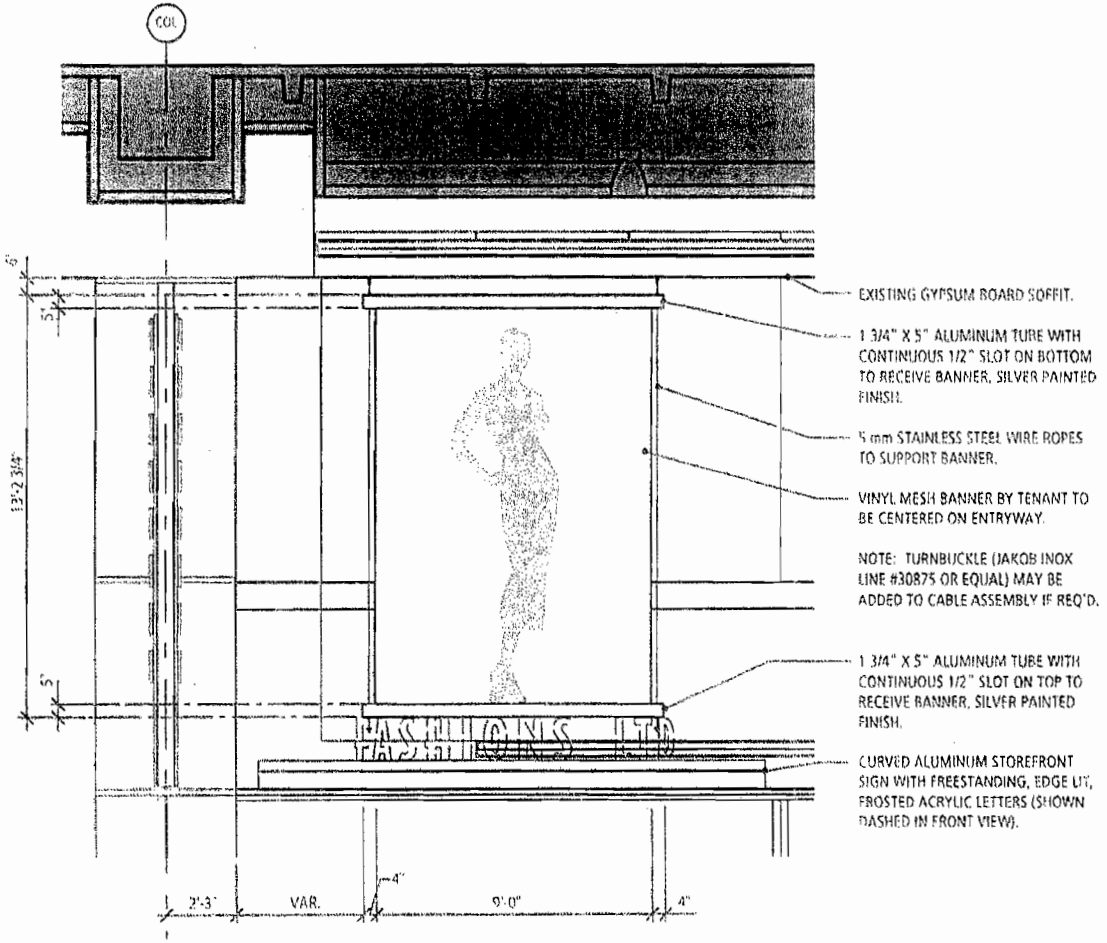

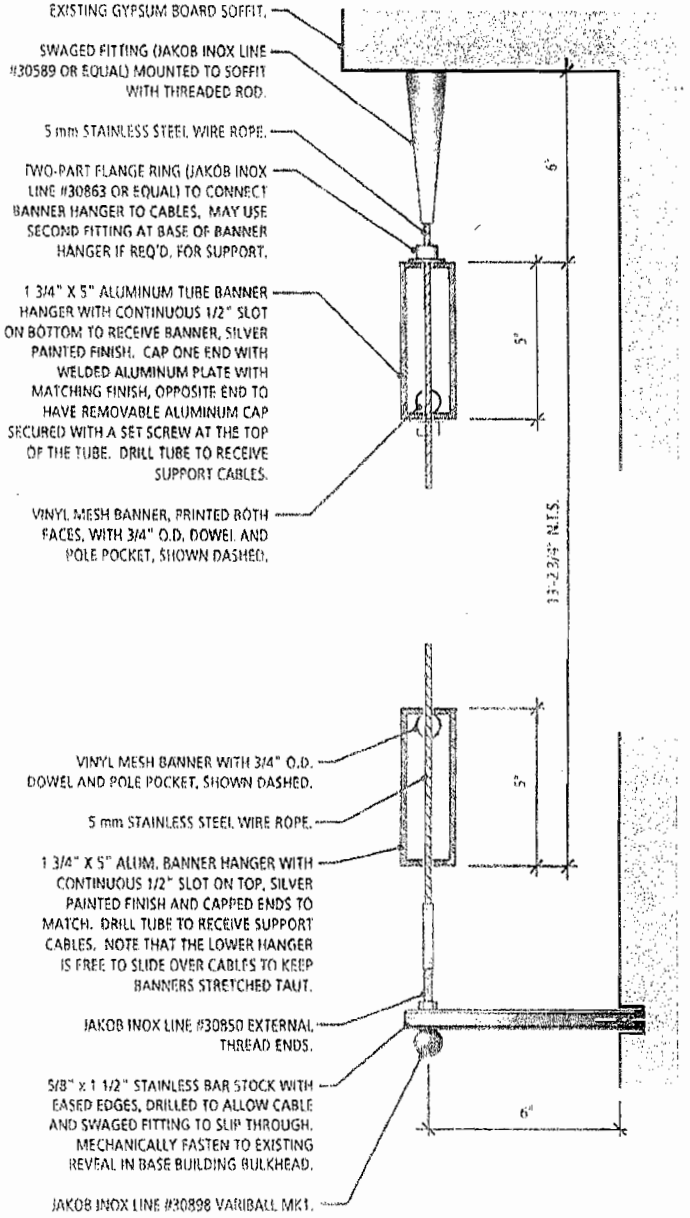

121

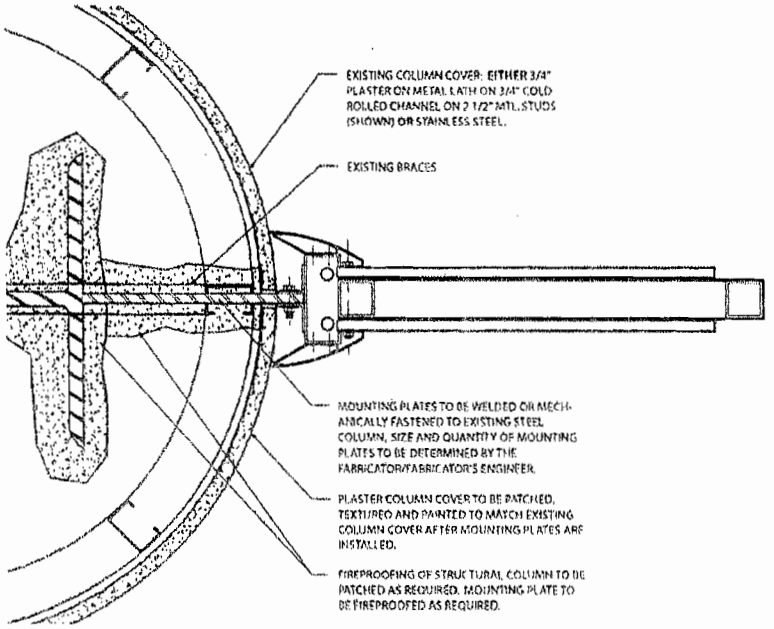
EXISTING COLUMN COVER: EITHER 3/4" PLASTER ON METAL LATH ON 3/4" COLD ROLLED CHANNEL ON 2 1/2" MTL. STUDS (SHOWN) OR STAINLESS STEEL.
EXISTING BRACES
MOUNTING PLATES TO BE WELDED OR MECHANICALLY FASTENED TO EXISTING STEEL COLUMN, SIZE AND QUANTITY OF MOUNTING PLATES TO BE DETERMINED BY THE FABRICATOR/FABRICATOR'S ENGINEER.
PLASTER COLUMN COVER TO BE PATCHED, TEXTURED AND PAINTED TO MATCH EXISTING COLUMN COVER AFTER MOUNTING PLATES ARE INSTALLED.
FIREPROOFING OF STRUCTURAL COLUMN TO BE PATCHED AS REQUIRED. MOUNTING PLATE TO BE FIREPROOFED AS REQUIRED.

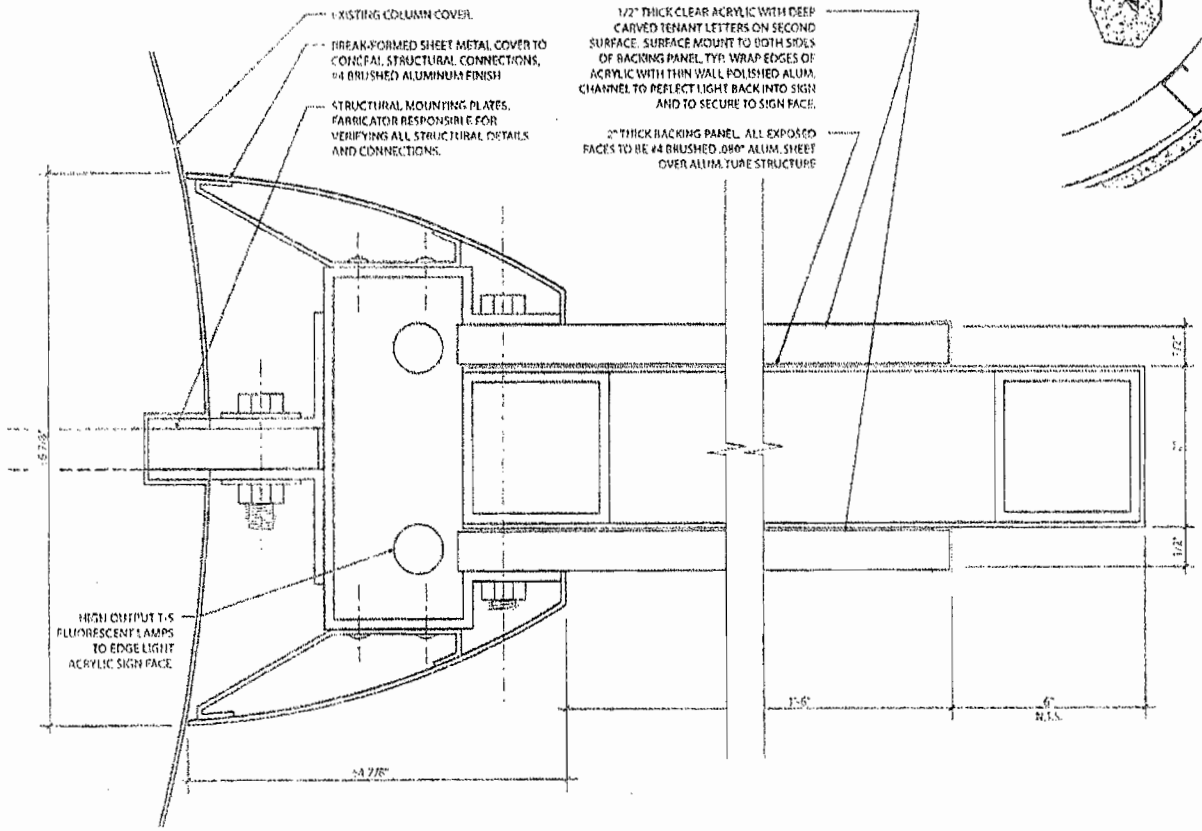
EXISTING COLUMN COVER.
BREAK-FORMED SHEET METAL COVER TO CONCEAL STRUCTURAL CONNECTIONS, #4 BRUSHED ALUMINUM FINISH
STRUCTURAL MOUNTING PLATES. FABRICATOR RESPONSIBLE FOR VERIFYING ALL STRUCTURAL DETAILS AND CONNECTIONS.
1/2" THICK CLEAR ACRYLIC WITH DEEP CARVED TENANT LETTERS ON SECOND SURFACE. SURFACE MOUNT TO BOTH SIDES OF BACKING PANEL, TYP. WRAP EDGES OF ACRYLIC WITH THIN WALL POLISHED ALUM. CHANNEL TO REFLECT LIGHT BACK INTO SIGN AND TO SECURE TO SIGN FACE.
2" THICK BACKING PANEL. ALL EXPOSED FACES TO BE #4 BRUSHED .080" ALUM. SHEET OVER ALUM. TUBE STRUCTURE
HIGH OUTPUT T-5 FLUORESCENT LAMPS TO EDGE LIGHT ACRYLIC SIGN FACE
1'-6"
6"
N.T.S.

12

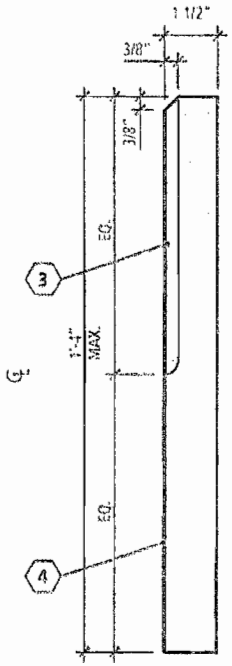

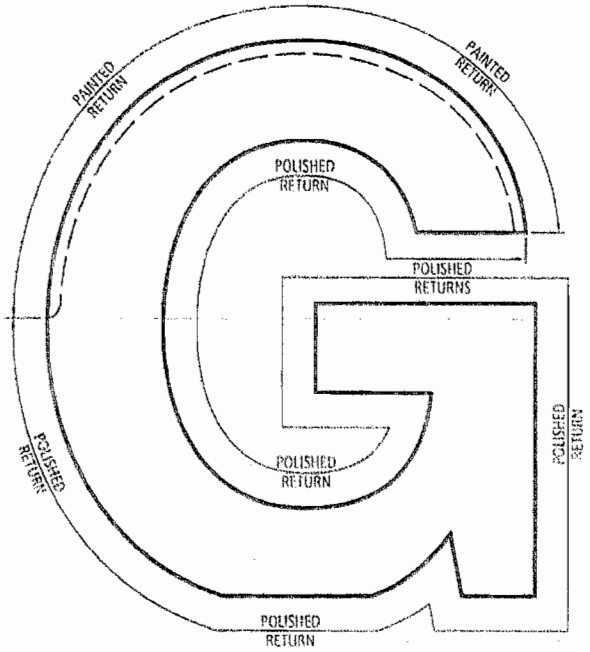

GENERAL NOTES

1. TO MAXIMIZE LIGHT PENETRATION, ALL INSIDE LETTER RETURNS AND ALL LETTER BASES MUST BE FLAME POLISHED. THE OUTSIDE RETURNS OF CURVED LETTERS, SUCH AS "O", "C" AND "G", MUST BE POLISHED FROM THE LETTER BASE UP TO THE MID-POINT OF THE LETTER HEIGHT. THE OUTSIDE RETURNS OF VEE-SHAPED LETTERS, SUCH AS "V", "W" AND "Y", MUST BE POLISHED TO THE TOP EDGE OF THE LETTER.
2. TO REFLECT LIGHT BACK INTO THE LETTERS, THE TOP RETURN OF ALL LETTERFORMS MUST BE PAINTED BRIGHT WHITE. THE PAINT ON LETTERS WITH CURVED TOPS, SUCH AS THE "G" SHOWN, AND INVERTED VEE LETTERS, SUCH AS "A", MUST BE FEATHERED OUT TO CLEAR AT THE CENTERLINE OF THE LETTERFORM.
3. TOP RETURN OF ALL LETTERFORMS MUST HAVE A 45 DEGREE ROUTER CUT BEVEL PAINTED WHITE. THE BEVEL ON LETTERS WITH CURVED TOPS (SUCH AS THE "G" SHOWN) MUST STOP AT THE CENTERLINE OF THE LETTERFORM.
4. 3M OPAQUE WHITE VINYL #7725-10 MUST BE APPLIED TO THE BACK FACE OF THE LETTERS.
5. THE FRONT FACE OF ALL LETTERS TO BE A FROSTED FINISH CREATED WITH 120 GRIT DUAL ABRASION SANDER.

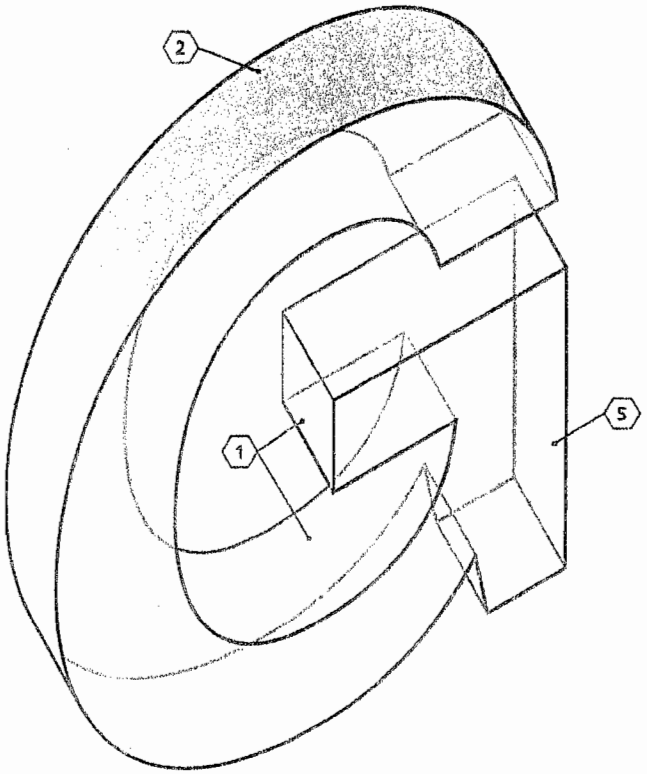

139

for additional details). The letter style and layout of this sign must be carefully selected/designed to make the best use of the illuminated sign area. Typefaces with broadly varying letter widths should be avoided to minimize awkward letter adjacencies, such as a narrow "F" balanced on a wide "O".

The graphic scrim is to be translucent vinyl mesh suspended behind the tenant's curved identity sign. The scrim must be printed on both faces with the image on the back face mirroring and registered with the image on the front. The front face of the scrim is to be illuminated using the lights mounted to the back of the curved identity sign. No text will be permitted on the scrims (ref. diagram 2.4 on page 23 for additional details).

ADDITIONAL NON-ILLUMINATED SIGNAGE

The following types of allowable non-illuminated signs are not restricted in terms of size. However, their use is viewed as decorative as well as informative and is similarly subject to the Airport's discretionary approval.

Non-dimensional letters and/or logos applied or painted directly on the inside face of glass storefront areas.

Supergraphic or bas-relief treatment of large amounts of storefront areas.

The following restrictions apply:

No exterior signage will be permitted on any part of the Airport Terminal building.

Electrical service to the Tenant's signs shall be from the Tenant's electrical panel. Access panels cannot be exposed from storefront.

All signs, bolts, fastenings and clips shall be of stainless steel, aluminum, brass or bronze. No black iron materials of any type shall be permitted.

The following types of signs, sign components and devices shall NOT be permitted:

a. Boxed or cabinet type.

b Cloth, paper, cardboard and similar stickers or decals.

c. Moving or rotating.

d. Exposed labels of manufacturers, underwriters, etc. Where labels are required by code, they must be located in an inconspicuous area.

e. No other signage will be allowed within 18" of Lease Line.

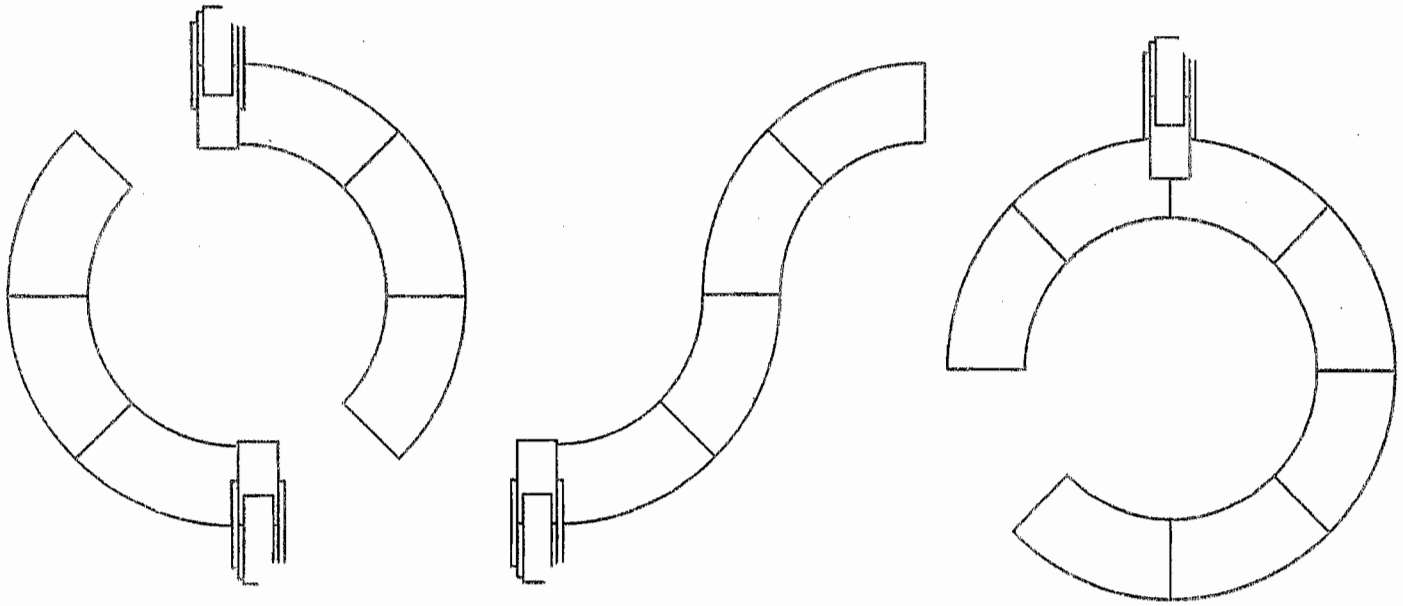

SCMUs shall be composed of a combination of standard modular units arranged to create the desired retail configuration. Modules include a low, curved counter; tall, curved display units; tall straight display units; and a standard sign element. Counters and displays may utilize a variety of shelving and hangers to exhibit merchandise.

Straight, high display units for retail adjacent to or creating walls in limited width corridors, not shown in sketches.

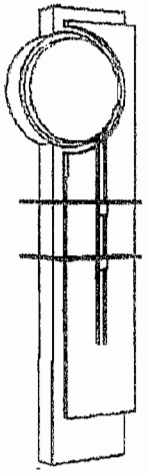

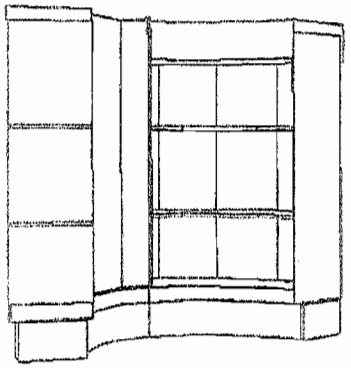

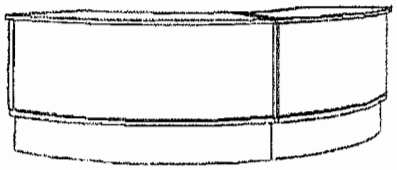

MECHANICAL, ELECTRICAL AND PLUMBING REQUIREMENTS

PROVIDED BY AIRPORT

MDAD will provide the following items at the Tenant's expense to maintain complete control over quality and to minimize interruption to airline operation and passenger inconvenience. Work that can best be coordinated, phased and completed most economically will be done by a single contractor.

MDAD will provide the premises as described on the lease exhibits. All indicated demising walls and storefront bulkheads should be in place at the time of tenant construction start date, unless noted otherwise.

Mechanical, Electrical and Plumbing requirements will be provided by MDAD as described. All additional requirements making a complete operational and code compliant concession space are to become the responsibility of the Tenant.

TENANT RESPONSIBILITIES

The premises will be provided with sprinkler heads at one per 100 sf of floor area, with the heads turned up. The Tenant is responsible for design and modification of fire protection system in their premises including special fire protection systems at hood conditions for food preparation areas.

The premises will be provided with one detector per 900 sf of floor area. The Tenant is responsible for design and modification of smoke detectors locations and connection of additional units into existing Airport systems.

Interface connection point(s) shall be provided in the general vicinity of each Tenant space. The Tenant shall install all fire alarm components, wiring, annunciation components and interface required beyond those provided by MDAD. All devices shall be UL listed and tested for use with Airport fire alarm system (Honeywell).

Wet stacks provide a minimum 1 inch, non-metered, cold water line with a ready tap for Tenant connection. Connection, piping, hot water generation, storage and metering are the Tenant's responsibility.

Wet stacks provide a 4-inch sanitary waste stack with stub-out under floor deck and a 4-inch vent stack overhead. The Tenant is responsible for design and connection into Airport system.

In selected locations a 4 inch or 6 inch riser with stub-outs under floor deck are provided for connection into grease interceptors at ramp level. Only the food and beverage Tenants are required to connect to the interception system. All drains in food and beverage locations are to be connected to the interception system, including floor drains. The Tenant is responsible for all costs for connection to grease waste risers.

Two-hour rated chases and mechanical penthouses dedicated for ventilation of concessions spaces are strategically located throughout the Airport. Tenants are responsible for installing a rated grease-exhaust ductwork from their premises, sloped horizontally above the ceilings to the nearest chase to minimize the spread of grease waste particles. The total grease exhaust system shall comply with current edition of NFPA-96. Chase penetrations and ductwork shall be closed with a two-hour rated closure or an alternative UL listed high temperature insulation wrap. Ductwork inside the chase will be vertical and connect to the exhaust fan penthouse. Ductwork, conduit and wiring for fan control, hood with fire suppression system, and exhaust fans are at the Tenant's expense. A separate make-up system of at least 90% outside air is needed for the hood exhaust to avoid drawing conditioned air from adjacent airport spaces. Alternate methods of achieving required duct ratings may be used with MDAD and building department approval. The Airport is providing the right of way path for the grease duct exhaust system.

Ventilation chases and mechanical penthouses have been provided as described above. The Tenant is responsible for installation of all ductwork and fans from lease space to chase and penthouse.

A 2000 cfm VAV box will be provided for every 800 sf of floor area. The Tenant is responsible for configuration of premises supply and return grilles. No provisions for heating are provided or required. The Tenant is responsible for all cost associated with providing additional capacity. The Airport will provide each Tenant space with a minimum of one VAV box with separate thermostat.

Where required by Miami Dade Fire Rescue Department (MDFR), the Airport shall extend smoke removal ductwork to concession space. Connection to system is by the Tenant.

One 277 volt, 1 phase, non-metered branch circuit, conduit and wiring will be provided to the premises in junction box for emergency lights and exit devices. The Tenant provides all emergency lights and exit devices, and interconnecting conduits.

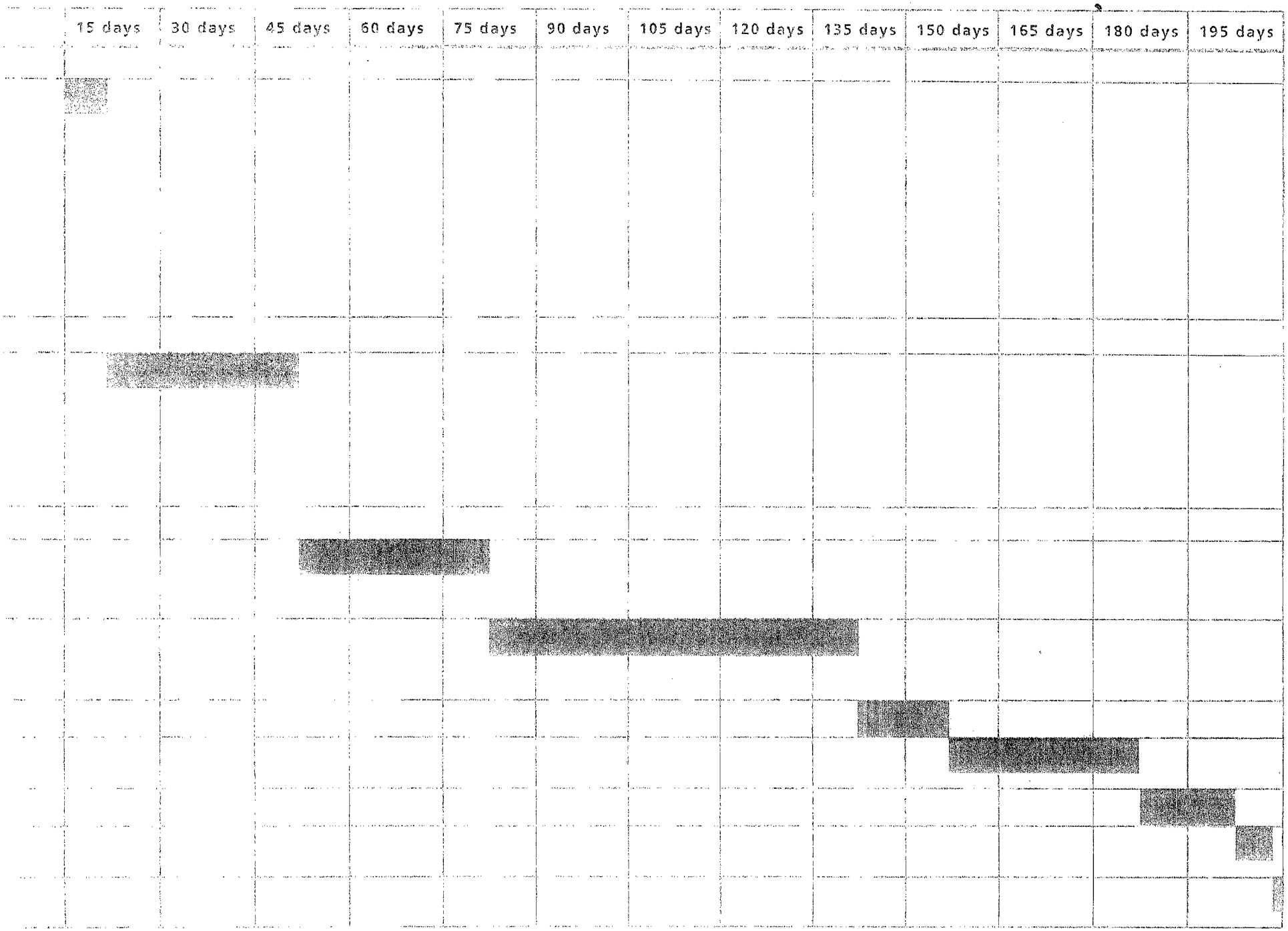
15 days
30 days
45 days
60 days
75 days
90 days
105 days
120 days
135 days
150 days
165 days
180 days
195 days

SUBMITTAL REQUIREMENTS

PRELIMINARY SCHEMATIC DESIGN

Key plan showing location of shop within the Airport Terminal Building.

Preliminary floor plans (scale ¼" = 1'-0") indicating interior design concept.

Typical interior elevations (scale ¼" = 1'-0").

Storefront elevation and section, including any graphics and signage. Indicate all materials and finishes (scale ¼" = 1'-0").

Preliminary finish schedule and materials boards.

DESIGN DEVELOPMENT

Key plan showing location of shop within the airport building.

Building plans – floor plans, framing plans, sections, elevations, plumbing and mechanical (including design criteria and loads), fire protection and fire detection, electrical and illumination (including tabulated loads), graphics/signing and design data.

Outline specifications.

Revised cost estimates and construction schedule.

Perspective rendering.

Tenant schematic and design development drawings must be approved before preparing contract documents. Prior to the start of any construction projects on the Airport in which the applicant bids or lets the contract, the Director must approve a Tenant Construction Application.

CONSTRUCTION DOCUMENTS

Construction documents are not to begin until all comments from the schematic and design development phases have been incorporated and approval from the Airport Coordinator is granted.

This phase should include the following:

Key plan showing location of shop within the Airport Terminal Building.

Floor plans (¼" = 1'-0") indicating storefront construction materials colors and finishes as well as sliding door track location (if required), location of partitions and type of construction, placement of merchandising fixtures and toilet room locations indicating placement of plumbing fixtures.

Reflected ceiling plans (¼" = 1'-0") indicating ceiling materials, various heights; location of all light fixtures, their manufacturer's name and catalog number; lamps to be used and mounting (recessed, surface, etc.); location of sprinkler heads and HVAC grilles.

Storefront elevation and section (¼ = 1'-0"), including any graphics and signage. Indicate all materials and finishes.

All interior elevations plus sections and details sufficient for construction (¼" = 1'-0").

Interior finish schedule.

Final material samples and color chips firmly attached to 15" x 20" illustration boards. All samples and materials must be clearly labeled and keyed to the appropriate drawings. Sample boards are to be retained by the MDAD Commercial Department for reference as Tenant's construction progresses.

Sign details (1 ½" = 1'-0") indicating elevation and section views, letter style and size, all colors and materials, methods of illumination, color of illuminate and voltage requirements. Food Tenants to include menu board details as well as proposed method of temporary signage (sales, daily or weekly specials) including location, size, materials, color, letter type and framing method.

Mechanical drawings, including electrical, HVAC, plumbing and sprinkler, and load summaries.

Drawings must indicate connected electrical loads, weights of heavy equipment, cases, etc.

Specifications not on drawings should be submitted on 8 ½" x 11" paper, three sets.

The documents at this point should contain all of the revisions required prior to this submittal. They should be ready to be signed and sealed pending North Terminal and Miami Dade County Building Department approval. Once these documents are approved, signed and sealed, documents can be provided to contractors for bidding or award.

ADDITIONAL SUBMITTALS

In addition to the documents described above that are required for the permitting process, the MDAD Commercial Department requires the following Tenant submittals for their review and approval: merchandising and/or menu lists, pricing schedule, hours of operation and staffing schedule. Tenants and concessionaires that provide public seating within their establishment or in other publicly accessible areas must also provide samples of the tables and chairs for testing by the MDAD staff. These submittals must be made during the Preliminary Schematic Design phase.

RECORD DOCUMENTS

At the completion of construction activities, the Airport record documentation as required by the Miami International Airport Design Guideline Manual shall be provided.

EXHIBIT F

TENANT AIRPORT CONSTRUCTION-NON-REIMBURSABLE PROCEDURES (TAC-N)

TENANT AIRPORT CONSTRUCTION REIMBURSABLE PROCEDURES (TAC-R)

TENANT AIRPORT CONSTRUCTION NON-REIMBURSABLE PROJECTS
and
TENANT AIRPORT CONSTRUCTION REIMBURSABLE PROJECTS

Miami Dade County
Miami Dade Aviation Department
Miami International Airport
May 9, 2002

Tenant Airport Construction Non-Reimbursable Projects (TAC-N) Design and Construction Procedures EXHIBIT F

Glossary of Terms

	A/E Tenant's State of Florida Registered Architect or Engineer responsible for the design of the project
GSA	General Service Administration
MARC	Miscellaneous Asbestos Recovery Contract
MCC/TAC	Miscellaneous Construction Contract/Tenant Airport Construction
MDAD	Miami Dade Aviation Department
NTP	Notice to Proceed
TAC-N	Tenant Airport Construction Non-reimbursable projects
Tenant	Business Partner, Lessee

General Information

If a tenant wants to improve or expand a leasehold area, the tenant must first contact an MDAD Properties or Commercial Operations Manager to discuss the improvement terms of the revision agreement if the project is acceptable to MDAD.

The MDAD Properties or Commercial Operations Manager will prepare a "QUICK-CHECK FORM" (with attachments), which will be submitted to the MDAD Development Division Manager and other divisions for review and approval. Special consideration is given to its impact upon other adjacent projects underway or proposed. The attachments that will accompany the "QUICK-CHECK FORM" will include but are not limited to the following:

a. A completed TAC-N Project Information form, copy attached.

b. Conceptual drawings/sketches.

c. Tenant's letter which includes a description of the project, copies of a proposed schedule and cost estimate, plus a statement requesting MDAD to approve the conceptual project for design and construction.

Procedures-Design and Construction

1. The MDAD Development Division Manager will assign an MDAD Project Number to the project. If approved, the "QUICK-CHECK FORM" (with attachments) will be submitted to the Facilities Division Manager who will review and assign the project to the MCC/TAC Chief who will then direct the TAC-N Project Manager to monitor the design and construction activities of the project. The TAC-N Project Manager will contact the tenant upon receipt of the project and will forward the TAC-N procedures to the tenant.

2. It is the responsibility of the tenant through its A/E and/or Contractor, as applicable, to:

a. Obtain copies of MDAD Record (As-Built) Drawings from the MDAD Technical Support Division by calling 305.876.7057.

b. Verify field conditions including but not limited to electrical, mechanical, HVAC, plumbing, water, sewer, structural, connecting points for all utilities/HVAC/fire protection/smoke evacuation, etc.

c. Ensure that the design of the project is in compliance with the MDAD Design Guidelines Manuals (MIA Terminal projects only) Guidelines is available on the Internet at (www.miami-airport.com).

d. Obtain a copy of the MDAD Asbestos Status Report for the project from the MDAD Environmental Engineering Division. Please call 305.876.8326 to request the report. This report is required by the Miami Dade Building Department for permitting and must be submitted along with the application for a building permit and two sets of plans, signed and sealed by the A/E of Record.

e. Coordinate schedules and locations for MIA terminal deliveries at the 2nd floor curbside with MDAD Landside Operations Division. Please call 305.876.7086 for coordination.

f. Coordinate schedules and construction within the MIA terminal with the MDAD Terminal Operations Division. Please call 305.876.7082 for coordination.

g. Coordinate airside accesses requirements with MDAD Airside Operations Division. Please call 305.876.7482 for coordination.

h. Coordinate the issuance of MDAD photo ID badges and requirements for orientation regarding airport security with the MDAD Safety and Security Operations Division. Please call 305.869.4028 for coordination.

i. Coordinate "SHUTDOWN PROCEDURES" with the MDAD Engineering Maintenance Division. Please call 305.876.7477 for coordination.

j. Coordinate requirements and specific procedures relating to permitting for DERM, DEP, dewatering excavating, trenching, stockpiling, maintenance and disposal of contaminated material. With the MDAD Environmental and Airport Engineering Division. Please call 305.869.1063 for coordination.

3. The tenant or the tenant's A/E of Record shall:

a. Submit 10 sets of 100% construction documents to the TAC-N Project Manager for review. Each sheet of the submitted plans shall be identified with a title box that includes the name, address, and telephone/fax numbers of the owner as follows:

Property Owner: Miami Dade Aviation Department
MDAD Project Manager:
Address: P.O. Box 592075, Miami, Florida 33159

Tel: _____
Fax: 305.876.0996

Project Owner/Lessee: _____

Tenant's Project Manager: _____

Address: _____

Tel: _____

Fax: _____

The TAC-N Project Manager will submit the sets of construction documents to Consultants and MDAD Staff for a Design Review. This process has a duration period of fourteen (14) calendar days. The Reviewers will fax any issues/comments to the tenant's A/E of Record and to the TAC-N Project Manager within fourteen (14) calendar days of receipt of the plans. The tenant or the tenant's A/E of Record shall confirm receipt of Review Comments with the TAC-N Project Manager on the fifteenth (15) day.

b. Address the Reviewer's issues/comments to the satisfaction of both parties by fax, meetings, telephone conversations, etc.

c. Revise the construction documents to reflect the changes required by the Design Reviewers. Submit three sets of 100% construction documents, one (1) of which must be signed and sealed by the tenant's A/E of Record. Reviewers must sign the 100% Back Check form, and return it to the A/E and TAC-N Project Manager.

The TAC-N Project Manager will review the submittals. The MCC/TAC Chief will then provide the "Letter of Concurrence" to the tenant in order to apply for a building permit for its project. This letter is valid for a period of sixty (60) calendar days from the date of

issuance. If the tenant or his A/E of Record has not applied for a building permit within the sixty (60) calendar days, the Letter of Concurrence will have to be reissued.

d. Provide the Miami Dade Building Department located at Building 5A, 4th Floor, MIA, with a Building Permit application, the TAC-N Letter of Concurrence, a copy of the MARC Report (if required) and two (2) signed and sealed 100% permit sets of the project construction documents. For additional information, please call 305.869.1363.

e. The TAC-N Project Manager will advise the tenant of the Miami Dade GSA, Risk Management Division's insurance requirements. Prior to commencement of construction, provide the TAC-N Project Manager copies of all Certificates of Insurance as required.

f. Submit copies of the Construction Schedule, Design and Construction Budget (Update), and Building Permit to the TAC-N Project Manager prior to commencement of construction.

4. Pre-Construction and Construction Meetings

The TAC-N Project Manager will determine, based on the complexity and magnitude of the project, if a pre-construction meeting is required and if regular construction meetings will be required. If required, the frequency of the construction meetings will be established based on the complexity and duration of the project. Attending the meetings will be the tenant's A/E and contractor, the MDAD representative and others as may be required. If no regular scheduled construction meetings are held, the TAC-N Project Manager or his designee will periodically visit the jobsite. The permit set of drawings is required to be kept and available on the construction site at all times.

5. Project Close-Out

If required, a walk through is scheduled and coordinated through the TAC-N Project Manager. It is the responsibility of the tenant to submit copies of the following, as applicable, to the TAC-N Project Manager:

a. The signed-off building permit (inspections) within 24 hours of its issuance.

b. Certificate of Occupancy or Completion within 24 hours of its issuance.

c. Warranties, manuals, instructions, etc., of any equipment that will be maintained by MDAD.

d. Record Drawings (As-Built drawings) on Bond paper, two (2) signed and sealed set prepared by the tenant's architect of Record within thirty (30) days from the issuance date of the Certificate of Occupancy or Completion.

e. Depending upon the size or complexity of the project, the tenant may be requested to provide the TAC-N Project Manager with As-Built Mylar's, 35mm aperture cards or digital files for the project.

The TAC-N Project Manager and the tenant will closeout the project. All documents must be received by the TAC-N Project Manager from the tenant prior to project closeout.

TENANT AIRPORT CONSTRUCTION REIMBURSABLE PROJECTS

PURPOSE

To provide details for the initiation and management of a Tenant Airport Construction Program reimbursable project.

DEFINITIONS

	FAA Federal Aviation Administration A/E Tenant's State Registered Architect or Engineer responsible for the design of the project.
BCC	Board of County Commissioners
GSA	General Services Administration
MARC	Miscellaneous Asbestos Recovery Contract
MCC/TAC	Miscellaneous Construction Contract/Tenant Airport construction
MDAD	Miami Dade Airport Aviation
NTP	Notice to Proceed
PM	Project Manager
TAC-N	Tenant Airport Construction Non- reimbursable projects
Tenant	Business Partner, Lessee

INSTRUCTION

GENERAL INFORMATION

Summary of Department Process for Design and Construction of TAC-R Projects

When an airport tenant wishes to improve or expand a leasehold area, the tenant must contact the MDAD Manager, Properties and Commercial Operations to discuss the proposed improvement or expansion. The Manager, Properties and Commercial Operations or designee determines whether the proposed design and construction will be a reimbursable or non-reimbursable project.

If the determination is that the proposed design and construction are reimbursable, the tenant must submit a letter to MDAD requesting approval to design and construct the project, detailing the proposed construction and providing a proposed schedule and cost estimate.

The Manager, Properties and Commercial Operations or designee prepares an instruction and forwards it to the MDAD Manager, Planning, the MDAD Design Chief, the MDAD Manager, Maintenance Engineering, the MDAD Manager, Terminal Facilities, and others as appropriate, for review and tentative approval.

If tentative approval in denied, the tenant is notified through MDAD Manager, Properties and Commercial Operations.

If tentative approval is given, the tenant is so advised through MDAD Manager, Properties and Commercial Operations and is invited to a meeting with a project conceptual review team which includes the MDAD Manager, Planning the MDAD Design Chief, the TAC-R chief to discuss the design process, bid and award process, construction and close out process. These discussions will include cost and schedule, and the identification of a TAC-R Project Manager.

There are standard MDAD procedures for the above named processes. However, dependent on the complexity, size, location and cost of the project, the conceptual review team may, through the TAC-R chief, waive certain aspects of these standard procedural requirements.

Procedures for Design and Construction

1. The design of the project will entail the Selection of an Architect/Engineer. The procedures for this activity are outlined in MDAD Procedure FD2-005.

2. Upon selection, the A/E will be required to produce the following:

(a) A Planning Book in accordance with MDAD Procedure FD1-040-P

(b) A Project Book in accordance to MDAD Procedure FD1-050-P

(c) Design Documents in accordance with MDAD Procedure FD3-007-P

(d) Design includes Contract Formation in accordance with MDAD Procedure FD4-040-P3.

3. Upon satisfactory completion of the design process, the project shall be bid and awarded for construction in accordance with MDAD Procedure FD4-011-P

4 Satisfactory completion of the project is dependent on inspections consistent with MDAD Procedures for Substantial Completion and Beneficial Occupancy as outlined in MDAD Procedures FD5-195-P

5 Upon satisfactory completion of item (4) above the project will be closed out accordance with MDAD Procedures FD5-245-P

6.The Project Manager shall be mindful of the fact that the above core MDAD Procedures with references to other Procedures together form the broad spectrum of management structures for the project.

EXHIBIT G

INDEPENDENT AUDITOR'S REPORT

EXHIBIT G

Sample Management Letter

Independent Auditor's Report

Board of Directors
XYZ Corporation

In planning and performing our audit of the Schedule of Gross Revenues and Percentage Fees Paid to the County of XYZ Corporation for the year ended _____xx, 20xx, we considered its internal control structure in order to determine our auditing procedures for the purpose of expressing our opinion of the Schedule of Gross Revenues and Percentage Fees Paid to the County and not to provide assurance on the internal control structure. Our consideration of the internal control structure would not necessarily disclose all matters in the internal control structure that might be material weaknesses under the standards established by the American Institute of Certified Public Accountants.

A material weakness is a condition win which the design or operation of one or more of the specific internal control structure elements does not reduce to a relatively low level the risk that errors or irregularities in amounts that would be material in relation to the Schedule of Gross Revenues and Percentage Fees Paid to the County being audited may occur and not be detected within a timely period by employees in the normal course of performing their assigned functions. However, we noted no matters involving the internal control structure and its operation that we consider to be material weaknesses as defines above.

This report is intended solely for the information and use of the Board of Directors and management of XYZ Corporation and Miami-Dade County, Florida and should not be used for any other purpose.

ABC & DEF, CPA's
_____ xx, 20xx

Sample Audit Report

Independent Auditor's Report

Board of Directors
XYZ Corporation

We have audited the accompanying Schedule of Gross Revenues and Percentage Fees Paid to the County (as defined in the Lease and Concession Agreement between Miami-Dade County Florida and XYZ Corporation) of XYZ Corporation for the year ended _____ xx, 20xx. This schedule is the responsibility of XYZ Corporation's management. Our responsibility is to express an opinion on this schedule base on our audit.

We conducted our audit in accordance with generally accepted auditing standards. Those standards require that we plan and perform the audit to obtain reasonable assurance about whether the Schedule of Gross Revenues and Percentage Fess Paid to the County is free of material misstatement. An audit includes examining, on a test basis, evidence supporting the amounts and disclosures in the schedule. An audit also includes assessing the accounting principles used and significant estimates made by management, as well as evaluating the overall schedule presentation. We believe that our audit provides basis for our opinion.

In our opinion, the Schedule of Gross Revenues and Percentage Fees Paid to the County referred to above presents fairly, in all material respects, the gross revenues of XZ Corporation for the year ended _____ x, 20xx and the related fees paid, as defined in the Lease and Concession Agreement referred to in the first paragraph.

This report is intended solely for the information and use of the Board of Directors and management of XYZ Corporation and Miami-Dade County, Florida and should not be used or any other purpose.

ABC & DEF, CPA's
_____ xx, 20xx

Sample Compliance Letter

Independent Auditor's Report

Board of Directors
XYZ Corporation

We have audited, in accordance with generally accepted auditing standards, the Schedule of Gross Revenues and Percentage Fees Paid to the County of XYZ Corporation for the year ended _____ xx, 20xx and have issued our report thereon, dated _____ xx, 20xx. We have not performed any substantive audit procedures beyond the date of our report on the Schedule of Gross Revenues and Percentage Fees Paid to the County. Accordingly, this report is based on our knowledge as of that date and should be read with that understanding.

In connection with our audit, nothing came to our attention that caused us to believe that XYZ Corporation failed to comply with the term of the Lease and Concession Agreement with Miami-Dade County, Florida insofar as they relate to the Company's book of accounts, records and reports. However, our audit was not directed primarily toward obtaining knowledge of such noncompliance.

This report is intended solely for the information and use of the Board of Directors and management of XYZ Corporation and Miami-Dade County, Florida and should not be used for any other purpose.

ABC & DEF, CPA's
_____ xx, 20xx

EXHIBIT G

XYZ
Corporation
Schedule of Gross Revenues and Percentage Fees Paid to the County For the Year Ended _____, 20xx

Month	Gross Revenues	Percentage Fee Due	Percentage Fee Paid	Balance Due
TOTAL				

EXHIBIT H

LABOR PEACE AGREEMENT

LABOR PEACE AGREEMENT

Taxco Sterling Co., Inc and UNITE HERE Local 355 have signed a Labor Peace Agreement in which UNITE HERE, the labor organization that seeks to represent the Company's employees, promises not to engage in picketing or other economic activity against the Company's operations at Miami International Airport for the life of its agreement with the Company.

FOR THE COMPANY:

Taxco Sterling Co., Inc.

BY: _____

ITS: President

DATE: 9-9-08

FOR THE UNION:

UNITE HERE Local 355

BY: _____ (BH)

ITS: _____

DATE: 9/11/2008

EXHIBIT I

MONTHLY REPORT OF GROSS REVENUES

EXHIBIT J

TSA PROHIBITED ITEMS LIST

Exhibit J

TSA Prohibited Items List
As of January 31, 2007

	Carry-on	Checked
Aerosol spray bottles and cans	Yes - 3 oz. or smaller container	Yes
All creams and lotions including Neosporin or first-aid creams and ointments, topical or rash creams and ointments, suntan lotions, moisturizers, etc.	Yes - 3 oz. or smaller container	Yes
Bubble bath balls, bath oils or moisturizers	Yes - 3 oz. or smaller container	Yes
Bug and mosquito sprays and repellents	Yes - 3 oz. or smaller container	Yes
Cigar Cutters	Yes	Yes
Corkscrews	Yes	Yes
Cuticle Cutters	Yes	Yes
Deodorants made of gel or aerosol	Yes -3 oz. or smaller container	Yes
Eye drops - You are allowed to carry a 3 oz. or smaller container of eye drops in a clear, one-quart plastic bag. There is no restriction on the amount you may carry, but containers greater than 3 oz. must be declared to the Security Officer and cannot be carried in your clear, one-quart bag.	Yes	Yes
Eyeglass Repair Tools - including screwdrivers.	Yes	Yes
Eyelash Curlers	Yes	Yes
Gel-filled bras and similar prosthetics - Gel-filled bras may be worn through security screening and aboard aircraft.	Yes	Yes

Hair styling gels and spray of all kinds including aerosol	Yes - 3 oz. or smaller container	Yes
Hair Straightener or Detangler	Yes - 3 oz. or smaller container	Yes
Knitting and Crochet Needles	Yes	Yes
Knives - except for plastic or round bladed butter knives.	**No**	Yes
Lip gels such as Carmex or Blistex	Yes - 3 oz. or smaller container	Yes
Liquid lip glosses or other liquids for lips	Yes - 3 oz. or smaller container	Yes
Liquid bubble bath including gel or liquid filled	Yes - 3 oz. or smaller container	Yes
Liquid foundations	Yes - 3 oz. or smaller container	Yes
Liquid, gel or spray perfumes and colognes	Yes - 3 oz. or smaller container	Yes
Liquid sanitizers	Yes - 3 oz. or smaller container	Yes
Liquid soaps	Yes - 3 oz. or smaller container	Yes
Liquid mascara	Yes - 3 oz. or smaller	Yes

	container	
Make up removers or facial cleansers	Yes - 3 oz. or smaller container	Yes
Mouthwash	Yes - 3 oz. or smaller container	Yes
Nail Clippers	Yes	Yes
Nail Files	Yes	Yes
Nail polish and removers	Yes -3 oz. or smaller container	Yes
Non-prescription liquid or gel medicines like cough syrup and gel cap type pills - You are allowed to carry up to 3 oz., of eye drops in a clear, one-quart plastic bag. Volumes greater than 3 oz. must be declared to the Security Officer and cannot be carried in your clear, one-quart bag. For more details see read TSA information on liquid medications.	Yes	Yes
Personal lubricants - You are allowed to carry up to 3 oz., of eye drops in a clear, one-quart plastic bag. Volumes greater than 3 oz. must be declared to the Security Officer and cannot be carried in your clear, one-quart bag.	Yes	Yes
Safety Razors - including disposable razors.	Yes	Yes
Saline solution - You are allowed to carry up to 3 oz., of eye drops in a clear, one-quart plastic bag. Volumes greater than 3 oz. must be declared to the Security Officer and cannot be carried in your clear, one-quart bag.	Yes	**Yes**
Scissors - plastic or metal with blunt tips.	Yes	Yes
Scissors - metal with pointed tips and blades shorter than four inches in length.	Yes	Yes
Shampoos and conditioners	Yes - 3 oz. or smaller container	Yes
Toothpaste	Yes - 3 oz. or smaller	Yes

	container	
Toy Transformer Robots	Yes	Yes
Toy Weapons - if not realistic replicas.	Yes	Yes
Tweezers	Yes	Yes
Umbrellas- allowed in carry-on baggage once they have been inspected to ensure that prohibited items are not concealed.	Yes	Yes
Walking Canes - allowed in carry-on baggage once they have been inspected to ensure that prohibited items are not concealed.	Yes	Yes
NOTE: Some personal care items containing aerosol are regulated as hazardous materials. The FAA regulates hazardous materials. This information is summarized at www.faa.gov.		

Electronic Devices

	Carry-on	**Checked**
Camcorders *(See below)*	Yes	Yes
Camera Equipment - the checked baggage screening equipment will damage undeveloped film in camera equipment. We recommend that you either put undeveloped film and cameras containing undeveloped film in your carry-on baggage or take undeveloped film with you to the checkpoint and ask the screener to conduct a hand-inspection. *(See below)*	Yes	Yes
Laptop Computers *(See below)*	Yes	Yes
Mobile Phones *(See below)*	Yes	Yes
Pagers *(See below)*	Yes	Yes
Personal Data Assistants (PDA's) *(See below)*	Yes	Yes
NOTE: We recommend keeping fragile or expensive items with you in your carry-on bags.		
NOTE: Check with your airline or travel agent for restrictions on the use of these and other electronic items during your flight.		

150

Sharp Objects

	Carry-on	Checked
Box Cutters	No	Yes
Ice Axes/Ice Picks	No	Yes
Knives - except for plastic or round bladed butter knives	No	Yes
Meat Cleavers	No	Yes
Razor-Type Blades - such as box cutters, utility knives, razor blades not in a cartridge, but excluding safety razors.	No	Yes
Sabers	No	Yes
Scissors - metal with pointed tips and blades shorter than four inches	Yes	Yes
Swords	No	Yes
NOTE: Any sharp objects in checked baggage should be sheathed or securely wrapped to prevent injury to baggage handlers and inspectors.		

Sporting Goods

	Carry-on	Checked
Baseball Bats	No	Yes
Bows and Arrows	No	Yes
Cricket Bats	No	Yes
Golf Clubs	No	Yes
Hockey Sticks	No	Yes
Lacrosse Sticks	No	Yes
Pool Cues	No	Yes
Ski Poles	No	Yes
Spear Guns	No	Yes
For more information, please read our Traveling with Special Items section.		

Guns & Firearms

	Carry-on	Checked
Ammunition - Check with your airline or travel agent to see if ammunition is permitted in checked baggage on the airline you are flying. If ammunition is permitted, it must be declared to the airline at check-in. Small arms ammunitions for personal use must be securely packed in fiber, wood or metal boxes or other packaging specifically designed to carry small amounts of ammunition. Ask about limitations or fees, if any, that apply. Read TSA Firearms & Ammunition section	No	Yes
BB guns	No	Yes
Compressed Air Guns	No	Yes
Firearms - firearms carried as checked baggage MUST be unloaded, packed in a locked hard-sided container, and declared to the airline at check-in. Read TSA Firearms & Ammunition section.	No	Yes
Flare Guns - May be carried as checked baggage MUST be unloaded, packed in a locked hard-sided container, and declared to the airline at check-in. Read TSA section on Camping.	No	Yes
Flares	No	No
Gun Lighters	No	Yes
Gun Powder including black powder and percussion caps	No	No
Parts of Guns and Firearms	No	Yes
Pellet Guns	No	Yes
Realistic Replicas of Firearms	No	Yes
Starter Pistols	No	Yes
NOTE: Check with your airline or travel agent to see if firearms are permitted in checked baggage on the airline you are flying. Ask about limitations or fees, if any, that apply. All of the firearms listed above, as well the frame or receiver of such firearms, carried as checked baggage, MUST be unloaded, packed in locked hard-sided gun case, and declared to your airline at check-in.		

150

Tools

	Carry-on	Checked
Axes and Hatchets	No	Yes
Cattle Prods	No	Yes
Crowbars	No	Yes
Hammers	No	Yes
Drills and drill bits (including cordless portable power drills)	No	Yes
Saws (including cordless portable power saws)	No	Yes
Tools (greater than seven inches in length)	No	Yes
Tools (seven inches or less in length)	Yes	Yes
Screwdrivers (seven inches or less in length)	Yes	Yes
Wrenches and Pliers (seven inches or less in length)	Yes	Yes
NOTE: Any sharp objects in checked baggage should be sheathed or securely wrapped to prevent injury to baggage handlers and Security Officers.		

Martial Arts & Self Defense Items

	Carry-on	Checked
Billy Clubs	No	Yes
Black Jacks	No	Yes
Brass Knuckles	No	Yes
Kubatons	No	Yes
Mace/Pepper Spray - One 118 ml or 4 Fl. oz. container of mace or pepper spray is permitted in checked baggage provided it is equipped with a safety mechanism to prevent accidental discharge. For more information visit www.faa.gov., click on Passengers, then Preparing to Fly.	No	Yes
Martial Arts Weapons	No	Yes
Night Sticks	No	Yes
Nunchakus	No	Yes
Stun Guns/Shocking Devices	No	Yes
Throwing Stars	No	Yes

153

NOTE: Any sharp objects in checked baggage should be sheathed or securely wrapped to prevent injury to baggage handlers and Security Officers.

Explosive & Flammable Materials, Disabling Chemicals & Other Dangerous Items

Explosive Materials	Carry-on	Checked
Blasting Caps	No	No
Dynamite	No	No
Fireworks	No	No
Flares (in any form)	No	No
Hand Grenades	No	No
Plastic Explosives	No	No
Realistic Replicas of Explosives	No	No

Flammable Items	Carry-on	Checked
Aerosol (any except for personal care or toiletries in limited quantities)	No	No
Fuels (including cooking fuels and any flammable liquid fuel)	No	No
Gasoline	No	No
Gas Torches	No	No
Lighter Fluid	No	No
Lighters - All lighters are prohibited as carry-on items. Lighters without fuel are permitted in checked baggage. Lighters with fuel are prohibited in checked baggage, unless they adhere to DOT exemptions, which allow up to two fueled lighters if properly enclosed in a DOT approved case. If you are uncertain as to whether your lighter is prohibited, please refrain from bringing it to the airport.	No	No
Strike-anywhere Matches - Up to 4 books of safety (non-strike anywhere) matches are permitted as carry-on items, but all matches are prohibited in checked baggage.	No	No
Flammable Paints (See Other Items below for non-flammable paints)	No	No

154

Turpentine and Paint Thinner	No	No
Realistic Replicas of Incendiaries	No	No

NOTE: There are other hazardous materials that are regulated by the FAA. This information is summarized at www.faa.gov, click on Passengers, then Preparing to Fly.

Disabling Chemicals & Other Dangerous Items	Carry-on	Checked
Chlorine for Pools and Spas	No	No
Compressed Gas Cylinders - including fire extinguishers	No	No
Liquid Bleach	No	No
Spillable Batteries - except those in wheelchairs	No	No
Spray Paint	No	No
Tear Gas	No	No

NOTE: There are other hazardous materials that are regulated by the FAA. This information is summarized at www.faa.gov.

Food & Drinks

	Carry-on	Checked
Beverages brought from home or purchased before reaching the security checkpoint in containers LARGER than 3 oz.	**No**	Yes
Beverages brought from home or purchased before reaching the security checkpoint in a 3 oz. or smaller container and in your quart-size, zip-top plastic bag.	**Yes**	Yes
Beverages purchased after security screening	**Yes**	Yes
Baby formula and food, breast milk and other baby items - These are allowed in your carry-on baggage or personal items. You can take these through the security checkpoints and aboard your plane. However, you must be traveling with a baby or toddler. All items including formula or breast milk will be inspected. Learn more on traveling with children.	Yes	Yes
Canned or jarred goods such as soup, sauces, peanut butter, fruits, vegetables and jellies	Yes - 3 oz. or smaller container	Yes
Cheese in pressurized containers	Yes - 3 oz. or smaller	Yes

155

	container	
Duty free alcohol and other items *(Please see TSA section on Duty Free Item)*	Yes, but some restrictions apply.	Yes
Gel based sports supplements	Yes - 3 oz. or smaller container	Yes
Jell-O's	Yes - 3 oz. or smaller container	Yes
Pudding	Yes - 3 oz. or smaller container	Yes
Whipped cream	Yes - 3 oz. or smaller container	Yes
Yogurt or gel like food substances	Yes - 3 oz. or smaller container	Yes

Other Items

	Carry-on	Checked
Gel-type candles	No	Yes
Gel shoe inserts - Gel shoe inserts are not permitted, but shoes constructed with gel heels are allowed and must be removed and screened.	No	Yes
Non-flammable liquid, gel, or aerosol paint	Yes - 3 oz. or smaller container	Yes
Flammable liquid, gel, or aerosol paint	No	No
Snow globes and like decorations regardless of size or amount of liquid inside, even with documentation.	No	Yes

156

Sharp Objects

Item	Carry-on	Checked
Box Cutters	No	Yes
Ice Axes/Ice Picks	No	Yes
Knives - except for plastic or round bladed butter knives	No	Yes
Meat Cleavers	No	Yes
Razor-Type Blades - such as box cutters, utility knives, razor blades not in a cartridge, but excluding safety razors.	No	Yes
Sabers	No	Yes
Scissors - metal with pointed tips and blades shorter than four inches	Yes	Yes
Swords	No	Yes

NOTE: Any sharp objects in checked baggage should be sheathed or securely wrapped to prevent injury to baggage handlers and inspectors.

Sporting Goods

Item	Carry-on	Checked
Baseball Bats	No	Yes
Bows and Arrows	No	Yes
Cricket Bats	No	Yes
Golf Clubs	No	Yes
Hockey Sticks	No	Yes
Lacrosse Sticks	No	Yes
Pool Cues	No	Yes
Ski Poles	No	Yes
Spear Guns	No	Yes

For more information, please read our Traveling with Special Items section.

Guns & Firearms

Item	Carry-on	Checked
Ammunition - Check with your airline or travel agent to see if ammunition is permitted in checked baggage on the airline you are flying. If ammunition is permitted, it must be declared to the airline at check-in. Small arms ammunitions for personal use must be securely packed in fiber, wood or metal boxes or other packaging specifically designed to carry small amounts of ammunition. Ask about limitations	No	Yes

or fees, if any, that apply. Read our Firearms & Ammunition section.		
BB guns	No	Yes
Compressed Air Guns (to include paintball markers) - Carried in checked luggage without compressed air cylinder attached.	No	Yes
Firearms - firearms carried as checked baggage MUST be unloaded, packed in a locked hard-sided container, and declared to the airline at check-in. Read our Firearms & Ammunition section.	No	Yes
Flare Guns - May be carried as checked baggage MUST be unloaded, packed in a locked hard-sided container, and declared to the airline at check-in. Read our section on Camping.	No	Yes
Flares	No	No
Gun Lighters	No	Yes
Gun Powder including black powder and percussion caps	No	No
Parts of Guns and Firearms	No	Yes
Pellet Guns	No	Yes
Realistic Replicas of Firearms	No	Yes
Starter Pistols	No	Yes

NOTE: Check with your airline or travel agent to see if firearms are permitted in checked baggage on the airline you are flying. Ask about limitations or fees, if any, that apply.

Tools

Item	Carry-on	Checked
Axes and Hatchets	No	Yes
Cattle Prods	No	Yes
Crowbars	No	Yes
Hammers	No	Yes
Drills and drill bits (including cordless portable power drills)	No	Yes
Saws (including cordless portable power saws)	No	Yes
Tools (greater than seven inches in length)	No	Yes
Tools (seven inches or less in length)	Yes	Yes
Screwdrivers (seven inches or less in length)	Yes	Yes
Wrenches and Pliers (seven inches or less in length)	Yes	Yes

NOTE: Any sharp objects in checked baggage should be sheathed or securely wrapped to prevent injury to baggage handlers and Security Officers.

158

Martial Arts & Self Defense Items

Item	Carry-on	Checked
Billy Clubs	No	Yes
Black Jacks	No	Yes
Brass Knuckles	No	Yes
Kubatons	No	Yes
Mace/Pepper Spray - One 118 ml or 4 Fl. oz. container of mace or pepper spray is permitted in checked baggage provided it is equipped with a safety mechanism to prevent accidental discharge. For more information visit www.faa.gov., click on Passengers, then Preparing to Fly.	No	Yes
Martial Arts Weapons	No	Yes
Night Sticks	No	Yes
Nunchakus	No	Yes
Stun Guns/Shocking Devices	No	Yes
Throwing Stars	No	Yes

NOTE: Any sharp objects in checked baggage should be sheathed or securely wrapped to prevent injury to baggage handlers and Security Officers.

Back To Top

Explosive & Flammable Materials, Disabling Chemicals & Other Dangerous Items

Explosive Materials	Carry-on	Checked
Blasting Caps	No	No
Dynamite	No	No
Fireworks	No	No
Flares (in any form)	No	No
Hand Grenades	No	No
Plastic Explosives	No	No
Realistic Replicas of Explosives	No	No
Flammable Items	**Carry-on**	**Checked**
Aerosol (any except for personal care or toiletries in limited quantities)	No	No
Fuels (including cooking fuels and any flammable liquid fuel)	No	No
Gasoline	No	No

Gas Torches	No	No
Lighter Fluid	No	No
Common Lighters - Lighters without fuel are permitted in checked baggage. Lighters with fuel are prohibited in checked baggage, unless they adhere to the Department of Transportation (DOT) exemption, which allows up to two fueled lighters if properly enclosed in a DOT approved case. If you are uncertain as to whether your lighter is prohibited, please leave it at home.	Yes	No
Torch Lighters - Torch lighters create a thin, needle-like flame that is hotter (reaching 2,500 degrees Fahrenheit) and more intense than those from common lighters. Torch lighters are often used for pipes and cigars, and maintain a consistent stream of air-propelled fire regardless of the angle at which it is held. Torch lighters continue to be banned.	No	No
Strike-anywhere Matches - **One** book of safety (non-strike anywhere) matches are permitted as carry-on items, but all matches are prohibited in checked baggage.	No	No
Flammable Paints (See Other Items below for non-flammable paints)	No	No
Turpentine and Paint Thinner	No	No
Realistic Replicas of Incendiaries	No	No

NOTE: There are other hazardous materials that are regulated by the FAA. This information is summarized at www.faa.gov, click on Passengers, then Preparing to Fly.

Disabling Chemicals & Other Dangerous Items	Carry-on	Checked
Chlorine for Pools and Spas	No	No
Small compressed gas cartridges (Up to 2 in life vests and 2 spares)	Yes	Yes
Fire extinguishers and other compressed gas cylinders	No	No
Liquid Bleach	No	No
Spillable Batteries - except those in wheelchairs	No	No
Spray Paint	No	No
Tear Gas	No	No

NOTE: There are other hazardous materials that are regulated by the FAA. This information is summarized at www.faa.gov.

Back To Top

Other Items

Item	Carry-on	Checked
Gel-type candles	No	Yes
Gel shoe inserts - Gel shoe inserts are not permitted, but shoes	No	Yes

constructed with gel heels are allowed and must be removed and screened. Read more on our shoe screening policy.		
Non-flammable liquid, gel, or aerosol paint	Yes - 3 oz. or smaller container	Yes
Flammable liquid, gel, or aerosol paint	No	No
Snow globes and like decorations regardless of size or amount of liquid inside, even with documentation.	No	Yes

EXHIBIT K

MIAMI-DADE AVIATION DEPARTMENT
MIAMI INTERNATIONAL AIRPORT
COMMERCIAL OPERATIONS

COMMERCIAL OPERATIONS
TENANT HANDBOOK MANUAL

March 2004

TABLE OF CONTENTS

	Page
I. WELCOME	4
II. INTRODUCTION	5
A. Vision	5
B. Commercial Operations Program Goals	5
C. Commercial Operations Program Objectives	5
D. Terminal Overview	5
III. GETTING STARTED AT MIA	7
A. People Concerns – Before Beginning Employment	7
1. Parking	7
2. Badging	8
3. Hiring New Employees	8
4. Employee Orientation	9
B. Other	9
1. Setting up Utilities	9
2. Use of Wireless Technologies	9
3. Banking Procedures	9
4. Hours of Operation	10
IV. STANDARD AIRPORT PROCEDURES	11
A. Improvements to Premises	11
1. Conditions for Permits	11
2. Permit Application Procedure	11
B. Storage	11
1. Designated Storage Areas	11
2. Unapproved Storage	11
3. Fire Safety in Storage Areas	12
4. Damage to Storage Areas	12
C. Changes in Price and Product Offerings	12
1. Street Pricing	12
2. Menu and Product Offerings	12
D. Terminal Maintenance and Operational Issues	13
1. Maintenance Services	13
2. Maintenance Responsibilities	13
3. Contracting Maintenance Work	14
4. Emergency Maintenance	15
E. Delivery Procedures	15
1. Delivery Hours	15
2. Terminal Side Delivery	15
F. Promotional Events and Public Relations Opportunities	17
1. Promotional Events	17
2. Public Relations Opportunities	18
H. Airport Police	18
1. Criminal or Suspicious Activity	18
I. Concessions Security	18

1. Employee/Contractor Strike Activities 19
2. Store Security MDAD to Confirm 19
3. Prosecution of Shoplifters 19
4. Reporting Incidents 19
5. Loitering 19
J. Emergencies 19
1. Medical 20
2. Fire 20
3. Other Reporting Concerns 21
4. After Hours Activity 21
5. Access to Premises 21
K. Trash Removal 22
1. Refuse Disposal 22
2. Designated Disposal Site 22
L. Airport Information Services 23
M. Airport Paging 23
N. Terminal Construction 23
1. Right to Develop Airport 23
2. Inconveniences during Construction 23
0. Required Monthly Meetings 23
IV. KEY CONTACTS 25

I. WELCOME

Welcome to the Miami International Airport family:

Miami International Airport is a family of dedicated Aviation Department county employee staff, its vendors, consultants, and Concessionaires. We number in the thousands and work closely together every day to achieve the four cornerstones upon which our mission is based: Safety and security, economic viability, customer service, and passenger service.

This standard of operations manual has been created to assist you in identifying our expectations of your inclusion into our Airport family. We believe we can meet the highest expectations of our passengers and airport patrons for an Airport, which enjoys the mixture of international and domestic passenger base but it requires your attention to detail to make this happen.

We look forward to working with you to achieve not only the standards included in this manual, but to excelling beyond these basic standards.

We welcome your input and wish you well in your new business here at the Airport.

Sincerely,

Jose Abreu, P.E. Director, Miami-Dade
Aviation Department

JA:par

II. INTRODUCTION

This Standards of Operations Manual is constructed so that it addresses the events that will usually transpire as your business embarks on a relationship with the Miami International Airport.

The Lease that exists between the Concessionaire and the County is the primary legal document that defines allowable activities and conditions within the leasehold premises. Review of the Lease is recommended for further definition of activities, concession and public boundaries, and other operating rights.

A. Vision

The MIA concessions program is a world-class retailing experience for its diverse passenger mix of the culturally diverse, cosmopolitan South Florida region, and a multi-continent international gateway by providing a wide variety of international, national and local brands that offer fair and varying price points, and innovative store designs, all within a safe, vibrant shopping environment.

B. Commercial Operations Program Goals

A commitment to balance competitively priced high quality goods and services with needed passenger services and revenue to the Airport recognizing the investment by the concessionaires and achievement of our DBE goals.

C. Commercial Operations Program Objectives

To achieve the mission/vision and goals, commercial operations' objectives are to:

- Enhance the image of MIA as a world class airport which reflects the cosmopolitan and international nature of the community
- Enhance customer service and satisfaction by improving product choice, price points, and customer service
- Optimize sales/transactions and revenue to the Airport.
- Integrate design and location of commercial operations within the infrastructure of the Airport for passenger convenience
- Balance national, regional and local commercial operations and concessions with DBE representation throughout the terminal

D. Terminal Overview

The existing Miami International Airport terminal is currently configured in a horseshoe with Concourses from A to H. Security checkpoints are arranged at the entryway to each of the concourses.

A $4.8 billion Capital Improvement Program is underway to create three terminals; the North, Central and South Terminals as described below:

North Terminal will create about 3.2 million square feet of space to accommodate the movement of aircraft, baggage and people for an international connecting hub operation. Approximately 174,000 square feet of concession space is split between food/beverage and retail. The look of the retail will be guided by our Concessionaire Design Criteria Handbook which will:

- Create a world class retail environment
- Utilize the full height of the concourse to create excitement for concessions
- Maximize the quality of presentation to third level corridors
- Compliment the architecture of the terminal with its fixtures and storefronts
- Use lighting and signage to create drama and identity
- Be outfitted with quality materials that integrate with the terminal design.

The North Terminal has four phases with the first phase in Zone D planned to open in May 2004 and is planned to be completed in 2007.

Central Terminal: The Central Terminal is the existing terminal, which includes Concourses E, F, and G. Plans are for the G Concourse to eventually be closed down. The Retail concessions include 38 stores in approximately 40,000 square feet in a landside retail program, which is anticipated to be built out by the last quarter in calendar year 2004.

South Terminal: The South Terminal is now under construction, which includes about 50,000 square feet of new concession space, the existing H Concourse and a new J Concourse.

Miami International Airport had approximately 14.7 million passengers in FY 02-03 with approximately 7 million international passengers.

III. GETTING STARTED AT MIA

While it is exciting and fun to work at Miami International Airport, there are some differences from working in other retail environments. This section will address some of those differences and some of the actions necessary because of those differences. We will guide you through some of the processes needed to get your employees, started working with us at MIA.

People Concerns – Before Beginning Employment

1. Employee Parking

A. Availability

The airport employee parking lot is available to employees of companies that lease space in the terminal building and have been authorized by the Aviation Department to utilize the employee parking facility. Employees may park in the employee parking lot only while on duty at the MIA terminal building.

B. Location and Transportation

The employee parking lot is located approximately 1 ½ miles southeast of the main terminal building. It can be accessed through LeJeune Road at N.W. 14th St. or through Perimeter Road at 15th Street. Shuttle buses provide 24-hour transportation to and from designated locations on the departure level of the terminal building with approximate headways of 5 minutes during peak times and 15 minutes during non-peak times.

C. Parking Decal Information

Employee parking decals are issued in 4, 8, or 12-month increments. Companies that will be paying for employee parking decals can establish an account and be invoiced monthly by contacting the Finance Division. Employees can pay for their parking at the Decal Section. The Decal Section is located on the ground floor of the Dolphin Garage, and is open Monday-Friday except holidays from 8:00 a.m. to 5:00 p.m. Contact the Decal Section for current employee parking rates. To register your company and establish authorized requestors for your company, please obtain sample letters from the Decal Section (tel. number: 305- 876-7567).

D. Parking Lot Safety and Security

- Access to the employee parking lot is restricted to vehicles with a valid employee parking decal and employees with valid MIA identification badges or airport authorized company identification badges. Family members/friends traveling in the same vehicle will be denied entry to the lot if they do not have a valid MIA or company I.D.
- Employees must have a valid MIA or airport approved company identification badge to ride the employee shuttle bus between the employee parking lot and the terminal building. Family members/friends are not allowed to ride the employee shuttle bus.

- There are emergency telephones located at each bus shelter in the employee parking lot. These phones may be used to report personal safety issues or non-emergency situations such as the need for motorist assistance.

E. Abuse of Parking Privileges

- Employee parking decals must be permanently affixed on vehicle for which it was issued and can only be used by authorized employee.
- Parking in the employee parking lot is a privilege and may be revoked at any time for failure to comply with established procedures.

2. Badging

The Concessionaire shall be subject to all Departmental requirements and FAA mandates pertaining to the issuance of airport identification badges, including, but not limited to employee completion of SIDA training conducted by the Department and background checks, as required by the FAA Unescorted Access Privilege Rule. The Concessionaire shall pay, or cause to be paid, to the Department such nondiscriminatory charges, as may be established from time to time, for lost or stolen ID badges and those not returned to the Aviation Department. The Concessionaire will be required to conduct background investigations and to furnish certain data on such employees before the issuance of such ID badges, which data may include the fingerprinting of employee applicants for such badges.

All airport employees working need to be badged before work commences. Our badging office is located under the Dolphin Parking Garage and is **generally** open during business hours to accommodate users.

Badges must be displayed at all times. All airside employees must participate in additional training for this access.

The badging department has its own rules and regulations with which the concessionaire must become familiar.

3. Hiring New Employees

From time to time the Department assists concessionaires with their hiring by organizing a job fair. Contact the Employees Relations Department for more information about this opportunity.

The Concessionaire should familiarize itself with the Agreement for any required staffing levels prior to concluding hiring processes.

4. Employee Orientation

All airport employees (including Concessionaires) will need to be scheduled for an employee orientation with the Airport to receive SITA training and customer service training (which is included in the orientation time). Please allow 90 minutes for this training, which must be accomplished prior to the employee beginning work at the Airport.

B. Other

1. Setting up Utilities

The cost of all utilities used or consumed on the Premises shall be borne by the Concessionaire. Unless the Premises are provided with separate electric, gas, and/or water meters, the Concessionaire agrees to pay for the utilities on the Premises as a monthly charge, plus any applicable taxes, upon billing by the Department, or utility companies. The Department encourages the Concessionaire to provide and install meters for utilities used at the Concessionaire's expense. See your Agreement for further detail on payment to MDAD for utility charges.

Other utilities used by the Concessionaire including telephones and telephone service hook-up, data lines and additional electrical and communications services are to be arranged for and paid by the Concessionaire. The Airport provides these type of services through its Information Technology Shared Tenant Services.

2. Use of Wireless Technologies

Any approval by the Department and subsequent installation by any Concessionaire, of a wireless network would be granted only with the explicit understanding that the Concessionaire agrees that the system be transitioned over to any future network once installed. Note that any and all costs, both one time and recurring, to be incurred as a result of the required transition to any future network shall be the responsibility of the concessionaire.

3. Banking Procedures

The bank is located on the fourth level of Concourses A and is equipped with a night depository, which is available to on-site Concessionaires. To arrange for depository services, the Concessionaire should contact the Bank to discuss procedures and fees.

It is critical that Concessionaires implement a policy and provide professional guidance for cash handling, ensuring that those staff tasked with making deposits do so in the safest manner possible.

Concessionaires are responsible for arranging procedures to ensure that all stores have the appropriate amount of change on hand.

4. Hours of Operation

All units have specific hours set that the unit is to be open and serving the public. On site personnel are responsible for knowing what their store operating hours stipulate. In some cases, depending on airline schedules caused by weather or other delays, the store may be required to stay open beyond required hours. Procedures need to be in place to keep the store open and operating during such events.

The store must have all products and services available the moment it opens. This means, for example, that the coffee must be prepared and ready to serve prior to the actual opening time the store must also keep all products available up until the time the store officially closes. It is not acceptable for store employees to begin to remove and clean the store until the actual closing time of the store.

IV. STANDARD AIRPORT PROCEDURES

A. Improvements to Premises

1. Conditions for Permits

Airport businesses must comply with their contractual requirement to obtain the written consent of MDAD to carry out any alterations to MDAD property. This includes what might be constructed as "minor" additions and deletions like an electrical outlet.

The permit process is designed to ensure that construction is compatible with present and future airport facilities, responsibilities are appropriately assigned, ensure compliance with other jurisdictions' requirements, meet MDAD standards for design, and assist Concessionaires with the timely and safe completion of their projects.

2. Permit Application Procedure

Concessionaire must first contact MDAD's Commercial Operations Division with any plans for site improvements, alterations or construction for preliminary plan approval.

The design criteria manual for each terminal details the submittal requirements and permit process.

B. Storage

1. Designated Storage Areas

Concession storage space may be leased through MDAD Commercial Operations Division and is designated in the Agreement. These storage areas are provided for activities related to the Concessionaire's doing business at the airport including storage, display, overstock or office uses. MDAD will make every effort to satisfy individual concession storage needs, dependent on the availability of suitable space.

2. Unapproved Storage

Hazardous, combustible or flammable materials, and storage of merchandise outside or adjacent to Concessionaire's retail premises or storage area is not permitted. Storage of materials, products, or trash that blocks access to fire safety equipment, doors and other access points is also prohibited. Concessionaires that consistently abuse storage privileges will be noticed and required to clean premises or will be billed for all associated costs required to clean up or remove the unapproved materials attributed to their business.

3. Fire Safety in Storage Areas

Concessionaires using storage areas must be aware of these common storage problems and must correct them to ensure fire safety:

- Storage too close to sprinkler heads.
- Improper storage of trash, boxes, oily rags, etc. These items are better removed to disposal or recycling receptacles provided for Concessionaires.
- Improper storage of flammable and combustible liquids and aerosols.
- Blocking of exit-ways and fire equipment.

4. Damage to Storage Areas

Storage rooms and the access to those rooms are the property of MDAD. Concessionaires found to be consistently causing damage to MDAD
property will be noticed and may be billed for repairs following review and discussion with MDAD as necessary.

C. Changes in Price and Product Offerings

1. Street Pricing

The Concessionaire shall not charge prices in excess of one hundred ten percent of Street Prices as defined in the Agreement. The Concessionaire will be required to submit examples of pricing periodically as indicated in the Lease Agreement. MDAD will monitor Concessionaire prices to ensure compliance.

Concessionaires are required to submit a detailed list of all services and items (and their corresponding prices) offered in their assigned premises.

Prior to adding new items or increasing prices, Concessionaires are required to inform the airport and to seek written approval from the Department.

2. Menu and Product Offerings

MDAD and the Concessionaire agrees to offer a set of products and services approved prior to the opening of the location.

Any sales by the Concessionaire of services, products, or items not specifically approved in its Agreement shall constitute a default. In the event of such default, the Concessionaire will discontinue the sale or service of the unapproved product immediately, upon written notice from the Department. Failure to discontinue such sales shall be grounds for termination of the Agreement.

To request that an additional product be sold, the Concessionaire must submit in writing for approval to the Commercial Operations Division the request inclusive of the product name and suggested price along with the required support for the establishment of the proposed price.

D. Terminal Maintenance and Operational Issues

1. Maintenance Services

MDAD's Facilities Department has, as its highest priorities, the repair and upkeep of the airfield, passenger service and common and public areas. While the concessionaire, as delineated in its lease, is responsible for maintaining its premises, MDAD is available to assist Concessionaires with other repairs and maintenance-related activities as much as manpower and work scheduling will allow. The Maintenance Department has established fees for these services, which will be billed directly to the Concessionaire.

2. Maintenance Responsibilities

A. MDAD Responsibilities

MDAD Maintenance Department is responsible for the maintenance, repair and upkeep of the following items found within the Concessionaire's premises:

- Exterior window cleaning on the airfield;
- Emergency spot lights;
- Broken lock or key in storefront rolling grill;
- Electrical system supplied to the store (Concessionaire responsibility begins at outlet);
- And HVAC system

B. Concessionaire Responsibilities

Concessionaires are expected to maintain their premises in good repair and keep them in a clean condition and orderly appearance. Concessionaires are responsible for any other upkeep and repair within their leasehold, including but not limited to windows, both inside and out, flooring, spot lights; display case and spot and window lighting; carpet; fixtures, and any

equipment or custom made features of the premise. Concessionaires must also arrange for their own janitorial service.

Concessionaires also are responsible for their own extermination, which must be coordinated with the Airport

3. Contracting Maintenance Work

Concessionaires who desire maintenance work can do so by:

- Contracting with an outside vendor who is capable of completing the desired maintenance and repair to the satisfaction of MDAD and to the Concessionaire; or

- Contracting with MDAD Facilities Department for those items outside MDAD's regular maintenance responsibilities.

A. Contracting with Outside Vendor Services

Concessionaires may hire service providers such as housekeeping, extermination or telecommunications without prior MDAD approval.

However, prior to any work, a permit must be issued. Concessionaires must contact Commercial Operations to obtain the proper permit forms and approval to hire any contractor who may impact airport operations such as electricians, phone repair, plumbers, etc.

Vendor must meet or exceed the original materials and workmanship and conform to any federal, state or local regulations. All work shall be subject to inspection by MDAD.

B. Contracting with Airport Facilities

Contact the MDAD Facilities (305-876-7311) to request a work order. Requests made 24 hours in advance of need are appreciated. For non-emergency requests, allow a maximum turn-around time of two weeks. Concessions contracting with the Maintenance Department will be billed on an hourly basis for manpower and the cost of supplies.

When requesting maintenance services, Concessionaires should identify the item in need of attention and time frame for completion. Efforts will be made to meet the request in a timely manner, depending on the department's manpower level and workload. Concessionaires should limit their requests to the Maintenance Department for maintenance and repair only, and not for making improvements or involving new construction.

4. Emergency Maintenance

The Facilities Department will respond to emergencies as a priority. Concessionaire should make clear in its request to the dispatch that an emergency situation exists for immediate attention. Examples of emergency maintenance requests are broken water pipes or any other uncontrollable leakage, broken display window glass, inoperable entry gate, etc.

E. Delivery Procedures

1. Delivery Hours

Airport businesses may take deliveries of products, supplies, etc. from 7:00 A.M. to 8:00 P.M. MDAD reserves the right to schedule deliveries or institute a common warehouse system with a common logistics fee to support the system if it becomes necessary.

2. Terminal Side Delivery

2.A Deliveries Terminal Curbside

- Delivery hours are from 7:00 p.m. to 8:00 a.m.
- Landside staff will determine drop off locations to minimize disruption to traffic.
- All vehicles must be attended. This is a Transportation Security Administration (TSA) mandate.
- Drivers must be able to provide proper identification and manifest of deliveries.
- Vehicle is subject to search.
- Location and delivery times may be subject to change due to security or operational requirements.

b. Vehicle Identification for Delivery Zones

All vehicles utilizing the loading and delivery zones in front of the terminal as described above must be adequately marked with company name and/or logo on both sides of the vehicle.

Painted, exterior magnetic, or interior static cling plastic signs attached to the side windows are acceptable.

Signs should look professional done with minimum dimensions of 8 1/2" by 11".

c. Delivery Zone Parking Restrictions (Time)

Use of loading and delivery zones is restricted to thirty (30) minutes. If a vendor anticipates that they will be actively loading or unloading for more than 30 minutes, they must notify Landside Operations at 305-876-7441.

d. Delivery through Terminal Building

Efforts should be made to avoid using public areas of the terminal for large quantity deliveries during peak hours. If supplies must be transferred through the public portions of the terminal, these pickups/deliveries should be scheduled during non-peak aircraft arrival and departure times.

Common carriers such as Federal Express, UPS or Airborne Express are authorized to bring shipments directly to the units or storage area.

All Concessionaire delivery carts, utility carts and trash collection dumpsters are asked to adhere to the following specifications to avoid damage to the Airport:

- Revolving white rubber, non-marking corner bumpers on platforms or base of carts
- Full encircling rubber bumpers around lower platform base
- Handles, bag holders or other portion carts that can cause damage, are to be protected with 3" revolving, white rubber, non-marking bumpers.
- Base of all carts are to be made of tubular construction.
- 8" x 1.75" Semi-Pneumatic ball bearing wheels are to be used.

Concessionaires found using non-compliant delivery equipment may be barred from future deliveries until which time equipment has been modified or replaced.

e. Airfield Deliveries

1. General

All Concessionaires are bound by the rules set forth by MDAD for operating motor vehicles on the airport's Airside Operation Areas (AOA). The requirements below summarize those rules that are typically applicable to the Concessionaire but in no way are representative of all airfield rules.

Concessionaires requiring AOA deliveries must call Airside Operations at 305-876-7359 during business hours and after hours call the Senior Agent at 305-588-7094, a minimum of one business day prior to the delivery date you must provide with the requesting company's name, name of person calling, MDAD ID number, contact phone number, name of company making the delivery, AOA entry point and delivery destination. Once the delivery company is escorted to the delivery site, the Concessionaire is required to provide continuous escort of delivery personnel while in the Security Display Area (SIDA).

2. Construction

Construction contractors must physically report to the Airside Operations Office located at E-20 Ground Floor, a minimum of one business day prior to the delivery date and submit for approval the Construction Delivery Notification Form. Once the delivery is escorted to the construction site, the contractor is required to provide continuous escort of delivery personnel while in the SIDA area.

Delivery vehicles arriving at an MDAD Access Gate without MDAD approved advance notification will be denied access.

No motor vehicle shall be operated on the Airport except on roadways or areas designated for such purposes.

Motor vehicles and equipment operating on the AOA must have an official motor vehicle identification permit issued pursuant to Operational Directives of the Aviation Department. In addition, company identification must be conspicuously displayed on such motor vehicles and equipment.

Except as otherwise stated in this handbook or other rules and regulations provided to the Concessionaire, the laws of the State of Florida in regard to the operation of motor vehicles, including traffic regulation, are made applicable also to the operation of motor vehicles on the Airport.

f. AOA - Driver Training

Before any employee is permitted to operate a motor vehicle of any kind or type on the AOA, such employee must attend and successfully complete the AOA Driver Training Course conducted from time to time by the Aviation Department. The privilege of a person to operate a motor vehicle on the AOA may be withdrawn by the Aviation Department for any violation of AOA driving rules. The Concessionaire shall be responsible ensuring that all such vehicle operators possess current, valid, appropriate Florida driver's licenses.

F. Promotional Events and Public Relations Opportunities

1. Promotional Events

Concessionaires are encouraged to conduct promotional events. Concessionaires are limited to conducting promotional events within the limits of the lease premises unless otherwise approved in writing. Promotional events should be coordinated and approved by the Commercial Operations Division.

Clean up activities associated with any promotion, unless otherwise specified, are the responsibility of the concessionaire organizing the promotion.

Application to conduct promotional activities in the Terminal must be made in writing to Commercial Operations.

2. Public Relations Opportunities

MDAD recognizes the desire of concessionaires to disseminate press releases for marketing and public relations purposes. Prior to sending press releases out regarding particular MDAD unit events, promotions or news, the releases must be approved by MDAD.

MDAD will not copy edit the release, but may make recommendations. This procedure is intended as a means of keeping the appropriate departments aware of airport business activities and a coordination to ensure the varied business activities public relations' efforts are appropriately coordinated.

G. Customer Complaint/Comment Procedures

Concessionaires must make reasonable, respectful efforts to remedy problems and issues raised by Airport patrons. Concessionaire must answer in writing all written customer complaints within ten (10) calendar days after receipt thereof and furnish a copy of the complaint and said answer to the Commercial Operations within the ten-day period.

H. Airport Police

The Miami-Dade County Police Department, located on site, is responsible for the overall safety and security of the airport and is recognized by the State of Florida as officers of the law with jurisdiction over airport activities.

1. Criminal or Suspicious Activity

Concessionaires and their staff should use the following resources should they see or suspect illegal activity.

Concessionaires can call the Police Department at 305-876-7373 to report a crime in progress or other suspicious activity.

I. Concessions Security

1. Employee/Contractor Strike Activities

In the event that a Concessionaire's business anticipates a strike of its staff or of companies that service the Concessionaire, the Manager of Landside Operations must be contacted for specific guidelines for governing strike activities at MIA.

2. Store Security MDAD to Confirm

The Miami-Dade County Police Department routinely patrols the terminal building and individual concessions. Commercial Operations staff meets with concession managers, store owners and staff on a monthly basis to discuss current problems. This meeting should be used to communicate ideas and methods of improving security. Store managers with questions or concerns may contact Commercial Operations.

3. Prosecution of Shoplifters

To maintain a high level or security at the airport, Concessionaires are strongly encouraged to prosecute shoplifters and staff caught stealing by attending court sessions. If a Concessionaire catches a shoplifter or observes a theft, immediately call 305-876-7373. To curb this activity, attending court sessions are critical.

4. Reporting Incidents

Badged staff function as a second set of eyes and ears for Airport Security and the Miami-Dade County Police Department. If a crime or suspicious activity is witnessed, please call the Police Department at 305-876-7373.

5. Loitering

If the Concessionaire notices a problem with airport staff or other people unknown to the Concessionaire, please call the Police Department at 305-876-7373.

J. Emergencies

The Operations Control Room (OCR) emergency communication and dispatch functions for the airport's police, fire, airport operations and maintenance departments. For protective and emergency services call:

Police Emergency: 305-876-7373
Fire/Medical Emergency: 305-876-7070
Operations: 305-876-0125

1. Medical

MDAD Fire Department's fully-trained and equipped Emergency Medical Technicians (EMTS) are on duty twenty-four (24) hours per day to handle any and all medical emergencies, regardless of severity. For Fire and Medical emergency, call 305-876-7070. Patients are taken to nearest Hospital.

2. Fire

In case of fire, Concessionaires are asked to be familiar with, and to instruct new staff in, the following procedure.

1) Evacuate the area.

2) Call for Fire or Medical assistance at 305-876-7070.

3) Attempt to fight the fire with a portable fire extinguisher ONLY if:

   a. you have been trained in the use of a fire extinguisher;

   b. the Fire Department has already been notified; or

   c. you can do so without exposing yourself to injury or the possibility of becoming trapped by the fire.

The Fire Department conducts regular inspections of Concessionaire and concession premises including storage areas, the main terminal, all concourses and all MDAD owned buildings for the purpose of fire prevention and to ensure compliance with fire safety practices.

An inspection report will be issued containing information relating to issues of non-compliance and/or recommendations by the inspector, with a date of re-inspection to ensure that the required corrections have been completed.

a. Fire Safety Compliance

The Fire Department will work with Concessionaires to ensure compliance with fire safety practices and codes. More rigorous regulations may be set for specific Concessionaires through provisions in the Lease. Fines for non-compliance as a result of inspections could occur.

b. Suspected Fire Code Violations

If Concessionaire suspects a fire code problem or if there is a concern about fire safety, questions can be directed at the time of inspection, or by calling the Fire Department.

3. Other Reporting Concerns

It is in the best interest of all airport staff to ensure that MIA is a safe workplace and place to visit. All staff are required, therefore, to assist the DOA with safety by being proactive in reporting any incidents that might threaten the safety of MIA's staff or visitors. This may include the following:

- Spills
- Ceiling / roof leaks
- Roadway potholes
- Non-functioning elevators / escalators
- Buckled carpeting / flooring concerns
- Bare electrical wires
- Pests and birds in the terminal
- Unsafe construction activity

Call Operations Control Room (OCR) at 305-876-0385 to report these problems.

4. After Hours Activity

Concessionaires should notify Operations Control Room (OCR) at 305-876-0385, when Staff will be working in the store / office after normal operating hours. Some activities may need to be approved by MDAD, Security and/ or the airlines. Advance calls will prevent confusion.

5. Access to Premises

a. Keys and Locks Policy

MDAD controls all keying and re-keying of MDAD facilities excluding Concessionaire Leasehold areas. A licensed and bonded locksmith hired by MDAD does keying and lock repair through a work order request.

b. Grand Master Key Policy

The Grand Master (a key that will open all airport locks) is kept by 1) police under "break" glass, 2) each shift commander of the fire department, and 3) the licensed and bonded MDAD locksmith.

No access will be granted using the Grand Master key except under the following conditions:

a. Fire or fire emergency within the locked area (this does not include access for fire inspections, testing or other regulatory activity);

b. Life threatening policy emergency or active pursuit of known suspect;

c. Maintenance, when actively working on an authorized lock request; and

d. Other emergency conditions as authorized by the Airport Manager.

4. Locked Out Procedure

In the event a concession employee is "locked out", "locked in", "forgotten keys", "lost keys" or is not involved in any of the emergency events listed above, the Grand Master key will not be used to gain access to the premises. A new key must be authorized to cover this situation. Only an authorized representative of the concession can request additional keys to access the premises.

NOTE: Requests should not be forwarded to the Police for purposes of unlocking Concessionaire space in the case of "forgotten keys" or "locked out" events.

K. Trash Removal

1. Refuse Disposal

All concessions are required to handle, recycle or dispose of garbage, papers, or refuse or other material on the Airport in the receptacles provided for that specific type of recyclable or non-recyclable waste. MDAD is not responsible for concession's refuse. MDAD is responsible for the refuse disposal contract for the hauling of solid waste and recyclables away from the terminal building.

Concessionaires must cover trash containers in all areas. Concessionaires are not permitted to use a vehicle used for hauling trash, dirt or any other materials on the Airport unless the vehicle is constructed so as to prevent the contents from escaping.

Within the Concessionaire premises, Concessionaire must provide suitable waste receptacles for oily wastes, rags and other rubbish and trash. All waste is to be removed daily.

2. Designated Disposal Site

MDAD maintains a solid waste and disposal unit providing trash compactors and recycling bins at designated sites in the Terminal building. Refuse from store operations, deliveries and storage areas shall be contained in this area. No other areas shall be used. All such areas shall be kept clean and sanitary at all times.

Temporary storage or disposal of refuse in places other than the designated solid waste and recycling bins is not permitted. Dumping of boxes or other materials, particularly in or near storage rooms and access hallways, is considered a fire and safety infraction.

In the event of spillage of trash, grease or any material which may be unsightly or detrimental to the pavement, or which might cause a safety hazard, the Concessionaire is responsible for clean-up.

L. Airport Information Services

Information centers are located in the center of both the departure/ticketing and baggage claim levels of the terminal. Staffed hours are generally from 5:00 AM to 10:00 PM, Monday through Sunday.

M. Airport Paging

The Airport Paging Center pages individuals for the purpose of delivering messages or giving directions. Concessionaires can use the paging system to locate passengers who have left merchandise or belongings. Paging hours are available 24 hours daily and the center can be contacted at 305-876-7000.

N. Terminal Construction

1. Right to Develop Airport

Construction and alteration of the terminal building, concourses and roadways are ongoing to meet the demands of the traveling public. MDAD reserves the right to develop or improve the airport as it sees fit.

2. Inconveniences during Construction

During construction, remodeling, expansion, relocation, maintenance and repair of the airport Concessionaires should expect some inconveniences during the process including, but not limited to, noise, dust, vibration and changes in access. MDAD will take action necessary to ensure the safety and protection of concession staff and merchandise as it is able.

Should Concessionaires experience extraordinary, unworkable conditions related to construction, Concessionaire should contact Commercial Operations immediately. Commercial Operations will assist Concessionaire in its attempt to remedy the situation or minimize construction impact on the concession.

0. Required Monthly Meetings

The Concessionaire shall meet no less than monthly and regularly with the Department to discuss matters relating to its Agreement. In addition, at the Department's request, the

Concessionaire shall attend other meetings with the County, airlines and any other parties designated by the Department.

Concessionaires are also required participate in such safety, security and other training and instructional programs, as the Department or appropriate Federal agencies may time to time require.

V. KEY CONTACTS

AVIATION PROPERTIES DEPARTMENT		TELEPHONE NUMBER
ACCESS TO PREMISES	Superintendent, Aviation Maintenance	
BADGES	Ground Transportation Office	
CONFERENCE CENTER	Reservations and Information	305-871-4100
DELIVERIES	Airside/Superintendent Airfield Operations	305-876-0152
	Landside /Supervisor Parking Control	305-876-7024
POLICE	**Communications Center (24 Hours)**	**305-876-7373**
FIRE/MEDICAL	**EMERGENCY**	**305-876-7070**
FIRE SAFETY	Fire Inspection Section	**305-876-7070**
INFORMATION SERVICES	Information and Paging	305-876-7000 ext. 8
LEASEHOLD PREMISES	Property Manager	
MAINTENANCE	Maintenance Dispatch (24 Hours)	305-876-7311
PARKING	Manager, Parking Systems	305-876-7024
RENT, FEES, AND CHARGES	Aviation Finance Specialist	
SECURITY AND SAFETY	Chief	305-869-4247
SIGNAGE	Property Manager	305-876-0299
STORAGE	Property Manager	305-876-7753
TRASH/RECYCLING	Maintenance Coordinator	305-876-0923

EXHIBIT L

STANDARDS OF OPERATION

EXHIBIT L
STANDARDS OF OPERATION

I. OPERATING REQUIREMENTS:

The Concessionaire shall comply with the Department's, **"Tenant Handbook" Exhibit K** and the **"Terminal Standards Manual"** (www.miami-airport.com), which may be amended from time to time, and the Concessionaire further agrees that its operation under the Agreement is a service to airline passengers and the users of the Airport and that the Concessionaire and/or its Sub-tenants shall conduct its operation in a first-class, businesslike, efficient, courteous, and accommodating manner. The Department shall have the right, in accordance with the provisions of the Lease and Concession Agreement, to make reasonable objections to the quality of articles sold, the character of the service rendered to the public, the prices charged, and the appearance and conditions of the locations. The Concessionaire and/or its Sub-tenants agree to promptly discontinue or remedy any objectionable practice.

All products must be top quality and new and a sufficient quantity of merchandise must be carried on the locations to ensure that the locations will be fully stocked at all times. The Concessionaire's and/or its Sub-tenants shall maintain adequate sales force on the locations and use the utmost skill and diligence in the conduct of the business. All employees, both the Concessionaires and its Sub-tenants shall be courteous and helpful to the public. Employees, interacting with the public, must be able to speak English and Spanish.

In addition, the Concessionaire understands and agrees that its operation at the Airport necessitates, at a minimum, the rendering of the following services:

A. Conduct of Operations Within Locations:

1) Concessionaire and/or its Sub-tenants shall not affix or maintain upon the glass panes or supports of the show windows, doors and the exterior walls of the locations, or any place within the locations if intended to be seen from the exterior of the locations, any signs, advertising placards, names, insignia, trademarks, descriptive material or any other such like item or items. The Department shall have the right, without giving prior notice to Concessionaire and/or its Sub-tenants and without any liability for damages to the locations reasonably caused thereby, to remove any of same from the locations, except such as shall have first received written approval of the Department as to size, type, color, location, copy, nature and display qualities.

2) No awning or other projection shall be attached to the outside walls of the locations or the terminal building without the prior written consent of the Department.

3) All loading and unloading of goods shall be done only at such times, in the areas and through the entrances designated for such purposes by the

Department. The Concessionaire and/or its Sub-tenants may be required to utilize the services of a delivery /distribution company selected by the Department, if the program is so implemented.

4) All garbage and refuse shall be kept in the appropriate containers so as to minimize the spillage of such garbage and refuse.

5) No radio or television antenna shall be erected on the roof or exterior walls of the locations without the prior written consent of the Department. Any such aerial shall be subject to removal without notice at any time, and any damage to the walls or roof caused by such removal shall be the responsibility of the Concessionaire

6) No loudspeakers, televisions, radios, flashing lights or other devices shall be used in a manner so as to be heard or seen outside the locations without the prior written consent of the Department.

7) The outside areas immediately adjoining the locations shall be kept clear at all times by Concessionaire and/or its Sub-tenants, and Concessionaire and/or its Sub-tenants shall not place any obstructions, garbage, refuse, merchandise or displays in such areas.

8) Concessionaire and/or its Sub-tenants shall not permit storage or restocking bins to be visible to the public, except while in the actual process of restocking shelves and display fixtures.

9) Concessionaire and/or its Sub-tenants, its employees, or its agents, shall not solicit business in any of the common areas, nor shall Concessionaire, its employees or its agents, distribute any handbills or any other advertising matter in common areas of the Terminal nor in any of the related parking facilities.

10) Concessionaire and/or its Sub-tenants shall not carry on any trade or occupation or operate any instrument or apparatus or equipment which emits an odor or causes a noise discernible outside the locations and which may be deemed offensive in nature.

11) Concessionaire and/or its Sub-tenants shall cause the locations to operate a minimum of seventeen (17) hours per day, seven days per week, with sufficient personnel to render a high quality of service. The Department may increase or decrease the required operating hours, if, in the discretion of the Department, such a change is desirable in providing the most efficient service.

12) Concessionaire and/or its Sub-tenants shall be required at all times to change any bill in denomination of twenty dollars ($20.00) U.S. or less when requested by any Airport user without charge and without the need to procure a sale. Concessionaire and/or its Sub-tenants shall accept all major credit cards and travelers checks.

13) Concessionaire agrees that it shall obtain prior written approval from the Department in all of the following matters:

i. Methods and hours of operation.
ii. Uniforms to be used by employees.
iii. The decor of the locations and all signs installed, erected or displayed therein.

14) The Concessionaire and/or its Sub-tenants shall properly control the actions of its employees at all times while said employees are working on the Airport, ensuring that they present a neat appearance and discharge their duties in a courteous and efficient manner and that they maintain a high standard of service to the public.

B. Property Management:

The Concessionaire will perform the following duties, subject to the terms, conditions, limitations and all other provisions of this Agreement:

1) Manage the Locations in a way that maximizes the highest and best use and financial return to the Department.
2) Monitor and enforce compliance with the terms and conditions of the lease and concession agreement and, if applicable, the sub-lease concession agreement, including but not limited to use clauses, insurance, pricing, capital expenditures, quality of merchandise, hours of operation, detailed reporting of sales, payment of fees and rent, and signage.
3) Function as operations liaison between the Department, governmental agencies, sub-tenants and/or others.
4) Maintain, or cause to maintain, the facilities in a first class manner pursuant to Department standards, which may be promulgated from time to time.
5) Ensure Customer Service Program compliance. High quality customer service is the cornerstone to an effective sales program. The Concessionaire is required to submit a customer service program or cause it's Sub-tenants to submit a customer service program within thirty (30) days of the Effective Date of the Agreement or within thirty (30) days of the Effective Date of the Sub-lease Agreement, for MDAD review and approval.
6) The Concessionaire and/or its Sub-tenants shall cause (i) cooperation in the testing of pressure, water flow and other appropriate tests of the fire extinguishing systems and apparatus located within the locations from time to time and as often as reasonably required by the Department, and if requested by the Department, furnish the County with copies of written reports of such tests; (ii) keep in proposer functioning order all fire fighting equipment in each locations and at all times maintain in each locations adequate stocks of fresh, suitable chemicals for use in such system and apparatus; (iii) notify the Department prior to conducting such tests; (iv) monitor and enforce compliance by the sub-tenants with all firefighting and

other health and safety equipment and systems, and any related licenses, certificates and inspections.

7) Direct, coordinate and monitor procedures and practices for deliveries of goods, products, materials and equipment, to and from the locations, as well as the collection and disposal of all waste and refuse related to the locations.

8) Remove signage and install temporary barricades in the event a sub-tenants location(s) is vacated or closes for any reason. ,

C. Leasing:

The Concessionaire will perform, but is not be limited to, the following:

1) Develop, subject to review and approval by MDAD, a standard sub-tenant Lease Agreement, in accordance with Article 19 "Sub-Leases".

2) Recruit, secure and retain, throughout the term of the Agreement, the proper tenant mix to meet the Departments proposed newsstand and/or specialty retail concepts.

3) Negotiate leases with potential sub-tenants to include, but not limited to, the following:
   - Negotiate the financial terms with potential sub-tenants in accordance with MDAD approved key business terms and baseline pro-forma.
   - Perform background checks and due diligence on all prospective sub-tenants, including partners, joint ventures, and other key participants.
   - Prepare and make available, if requested, background check summaries.
   - Prepare an abstract of the potential sub-tenant's entire deal, outlining all business terms for MDAD approval. The outline, unless otherwise instructed, will include, (i) concept summaries, to include, approved merchandise lists and any available photos or renderings, (ii) terminal plans depicting spaces of proposed spaces, (iii) financial and term sheets that will include the economics of the deal, (iv) anticipated sales per enplanement, (v) financial return to MDAD, (vi) sub-tenants projected investment summaries, (vii) amortization schedules, (viii) comparative airport data, and (ix) other pertinent aspects of the deal including local and/or DBE participation.
   - If applicable, enter into sub-leases for all retail and newsstand operations. The Concessionaire will coordinate its leasing process with the Department, obtaining approval of each rental arrangement, based upon a standard form of sub-lease approved in advance by the Department.
   - Prepare the appropriate Sub-tenant lease agreement.
   - Prepare exhibits to the sub-tenant lease agreement.

4) Establish and maintain for the Department a potential sub-tenant database, including the preparation of correspondence with potential sub-tenants.

D. Construction Management:

1) Tenant Coordination: The Concessionaire will be responsible for the management, administration and coordination of all design and construction associated with the maintenance, repair and/or leasing of the locations including, without limitation, all sub-tenant fixed improvements and/or refurbishments to be constructed in the locations, whether initial construction and alterations associated with any expansion, redevelopment or refurbishment of the locations or future construction and alterations. The Concessionaire shall be responsible for the supervision and coordination, subject to the prior written approval of the County, of the design of any sub-tenants locations to the extent contemplated in such sub-tenants sub-contract, including without limitation, the design of such sub-tenants storefront and the specifications of such sub-tenants equipment.

E. Merchandise Category Management:

Each Location throughout the Terminals under this program has been assigned a designated concept category. The category designated for each particular Location has been chosen based on analysis of historic customer capabilities and preferences, both here at the Airport, and at other airports of similar size and passenger traffic mix.

The Concessionaire is required to operate the Locations with a concept.that complies with the designated categories for each respective Location. The Department has the right for final concept and product mix approval.

1. News/Books and Related Concepts

All of the concepts described below have a predominant News theme with variations of concepts and merchandise assortments.

a. Newsstands (As distinct from News & Gift): These Locations will allocate no more than 5% of the sales floor space to high quality regional gifts, souvenirs and apparel.

These newsstand locations will have a heavy emphasis on a large selection of reading materials such as magazines, newspapers and books, A minimum of 500 separately displayed major national periodicals and magazines are required along with at least 200 book titles to include the top 20 weekly New York Times paperback and hardcover best sellers. (i.e., if there are 10 copies of one book, this represents one title.) Due to the varying leasable square footage of available newsstands that may be

leased under this Solicitation, exceptions to the required number of periodicals and book titles will be made on a case-by-case basis.

Regardless of size, the newspaper selection should consist of at least three local, two regional and three national papers. The Concessionaire is encouraged to determine and provide the most appropriate international papers depending on the Location's proximity to international flights.

Accompanying and complimenting the books and magazines will be a selection of health and beauty aids (HBA), snacks, travel accessories, and bottled beverages, offered at room temperature and refrigerated. Selling space allocation, expressed as a percentage of the total square footage of the Locations, is as follows:

Reading Materials	70%
HBA/Sundries	10%
Snacks and Beverages	15%
Gifts/Souvenirs/Travel Acc.	5%
Total	100%

Travel accessories might include wheeled luggage carts, small personal care and health products, small electronics, travel books and maps and travel pillows.

b. News & Gift (As distinct from Newsstands): A news and gift Location can dedicate up to 35% of the store's selling space for high quality regional gifts, souvenirs and apparel. The majority of the merchandise offered will focus on the categories of news, magazines and books, presented in a way that provides an unmistakable impression that the Location is a newsstand with a combination of essential travel health and beauty aids, snack foods, bottled beverages, and high quality regional gifts and souvenirs.

A minimum of 300 separately displayed major national periodicals and magazines are required along with at least 200 book titles to include the top 20 weekly New York Times paperback and hardcover best sellers. (e.g., if there are 10 copies of one book, this represents one title.) Due to the varying leasable square footage of available newsstands that can be leased under this Solicitation, exceptions to the required number of periodicals and book titles will be made on a case-by-case basis.

The newspaper selection should consist of at least three local, and three national papers. The Concessionaire is encouraged to determine and provide the most appropriate international papers depending on the unit's proximity to international flights.

Accompanying and complimenting the books and magazines will be a selection of health and beauty aids (HBA), snacks, travel accessories,

and bottled beverages, offered at room temperature and refrigerated. Selling space allocation, expressed as a percentage of the total square footage of the Locations, is as follows:

Reading Materials	45%
HBA/Sundries	10%
Snacks and Beverages	10%
Gifts/Souvenirs/Travel Acc.	35%
Total	100%

c. Bookstores: Each Location must include at least 3,500 separately displayed book titles. (If there are 10 copies of one book, this represents one title.) The top twenty hardcover and paperback best sellers on the New York Times Book Review Section must be carried. A minimum of five percent of the book titles must be children's books. All books must be sold at no more than the publishers' price. At least 50, but no more than 100, separately displayed major national periodicals and magazines shall be carried at all times.

The sales floor should be divided into two zones. The front half should feature a broad assortment of best sellers, new release and topical titles. The face-out ratio in this area should be at least 50%. The back half should feature a broad assortment of backlist titles. This area should be conducive to browsing, offering selection over quantity of copies.

It is strongly recommended that any stores with more than 1,000 feet of sales floor dedicated to books try to designate as a reading area, a quiet respite area in essence, containing plush furniture.

d. Sundries: This location could sell homeopathic and naturopathic supplements, vitamins and other nutritional products, over the counter drugs, baby, beauty, toiletries, health and personal care products, cosmetics film, children's toys and regional gifts, and souvenirs. An assortment of candy and snack foods could be carried as well.

e. Café Components for Newsstands or Bookstores: In addition to the merchandise mix required in newsstands or bookstores, Locations with a café component should offer hot and cold beverages and a limited selection of walkaway food items. Menu items might include, for example, branded upscale gourmet specialty coffee, lattes, other specialty cold beverages, pre-packaged specialty sandwiches, and freshly baked or prepared pastries and desserts such as croissants, muffins, bagels, scones, biscotti, Danish, cookies, brownies, cakes and fruit bars.

The café section must be located at or near the front of the Location and occupy between 10-25% of the total selling space. There must be direct interior customer access from the retail section of the store.

2. Specialty Retail

a. Entertainment & Consumer Electronics: These stores may include product lines dedicated to high-end, state of the art custom home theater audio including DVD sales and rentals, music downloads, CDs, headphones, CD players, MP3 players, batteries and chargers, music posters and other accessories.

This category may also include stores specializing in the sale of video game hardware and software, PC entertainment and related accessories and products, wireless devices and accessories, cell phone accessories, and cameras. Stores carrying high-quality products reflecting educational and entertaining programming also are permitted.

Another option might include distinctive home and office, health and fitness and outdoor products and products for the traveler.

The locations within this concept category are meant to address the passenger needs for purchasing affordable personalized entertainment, and/or consumer electronics and gadgets not generally available to the targeted international visitors. Product offerings should generally be of an impulse nature and small enough to be transported readily.

b. Fashion Apparel & Accessories: These Locations would optimally, but would not be required to present internationally recognized brands. This fashion apparel category could include concepts such as Casual Apparel, Leather Apparel, Fashion Accessories, Athletic Wear or Sports Apparel and accessories, Women's Fashions. These Locations could present U.S. designers such as Tommy Hilfiger, Nautica, Calvin Klein, Ralph Lauren, or DKNY. These Locations must have store design and merchandising displays that are innovative and inviting.

A Location with fashion accessories could feature a blend of branded fashion accessory products in multiple price ranges. Acceptable products might include ties, belts, scarves, handbags, wallets, and small leather essentials.

The concepts in this fashion apparel and accessories category also could include men's shoes or women's footwear. A complete line of footwear accessories could complement the footwear product line, with some apparel accessories such as socks, hosiery, leather belts, and men's dress shirts and cuff links.

c. Gift Specialty Shops: The specialty shops Locations in this category could include a destination themed souvenir store carrying gifts unique to South Florida including, for example, arts and local crafts. This concept category addresses the demand for unique gifts

representative of the best products from the gift shops of South Florida tourist destinations and hotels. These stores would be an important image enhancer for the region and a viable destination concept. Product categories might include, but not be limited to, local artisans original works of art and reproductions, logo's accessories, children's products such as art books, kites and paint sets, South Florida logo's apparel, souvenirs, novelties, chocolates and specialty citrus products celebrating Miami as a vacation destination.

Other concepts could include gourmet packaged foods, toy stores, chocolates, or lifestyle gifts.

If a lifestyle gifts store is proposed, it must present internationally recognized brands. It is envisioned that this Location would carry a variety of distinctive, selected housewares and small wares products covering every room of the house. This Location is imagined as carrying a selection of, or just one specific product line of, high-quality and unique items for the bedroom, bathroom, kitchen, living room and/or garden including such things as cabinet hardware, interior and exterior fittings, picture frames, small garden equipment, fixtures, tools, books, devices and nostalgic amusements. As with other Locations, these concepts must have a visible shipping service offering.

d. Jewelry, Watches & Accessories: These Locations could include fashion jewelry, high-end jewelry, watches, sunglasses and accessories for women, men and children and writing instruments. Examples of jewelry categories might include necklaces, bracelets, earrings, rings, hair accessories, and jewelry boxes. Merchandise could be themed to a particular jewelry type, such as sterling silver. Customers should be able to easily view and try on jewelry in a distinctive, comfortable, well-lit, upscale shopping environment. A writing instrument selection could feature internationally branded gold, silver, platinum and stainless ballpoint, fountain, rollerball, and highlighter pens and related merchandise such as pencils, inkwells and replacement cartridges. Related product lines could include leather cases, money clips and key chains.

A sunglasses Location could offer a mix of nationally branded sunglasses and related accessories including but not limited to, such notable fashion designer brands as Maui Jim, Ray Ban, Bolle, Persol, Prada, and Oakley.

e. Personal Care: This concept category may offer personal care products for men and women, fragrances, or cosmetics, hair, nail or spa products and services. This concept features design elements that are sympathetic to the senses such as therapeutic warm colors, soft, natural fabrics, nurturing lighting and relaxing music.

Merchandise content could feature quality bath and aromatherapy products, candles and candle accessories and related items including gift baskets. If a fragrance store is contemplated, the Location should provide the opportunity to buy U.S. and world-renowned fragrances featuring men's colognes, women's perfumes and unisex designer-type prestige fragrances and related products such as fragrance oils and perfumes, exotic, fancy crystal and glass bottles, and accessories. A cosmetics store would feature quality skin care, makeup, fragrance and hair care products, and be displayed at a quality level equal to or greater than the finest department store cosmetics counters featuring such brands as Clinique, Revlon, or MAC.

A hair/nail salon will offer quality haircuts, shampoos, color, permanents and other related services and retail products associated with such offering. A spa will offer facials, pedicures, manicures, massages and other related services and products associated with such offering.

A knowledgeable staff that is able to educate consumers and an environment that allows customers to sample products are important for this store.

f. Open Concept Designation: The concepts or themes for these locations are left to the discretion, creativity, and experience of the Proposers/Concessionaire. All proposals for these locations will be given careful consideration. The only concept that cannot be proposed for these "open" locations is a concept that would fall in the previously described "News/Books and Related Concepts".

F. Special Services

1) Monitoring Services: The Department shall have the right, without limitation, to monitor and test the quality of services of the Concessionaire and/or its Sub-Tenants, but shall not be required to do so. This monitoring shall include, but not be limited to, personnel, product quality, service, assistance and store neatness, through the use of shopping services, closed circuit T.V., and other reasonable means.

2) Prohibited Items/Shipping Services: The Transportation Security Administration (TSA) has instituted a security measure that prevents certain items from entering the Airport's sterile areas or post-security checkpoints.

The Department will provide a list of those items, which may change from time to time, to the Concessionaire as depicted on Exhibit J "Prohibited Items List" and the Concessionaire will cause its Sub-tenants to receive and acknowledge receipt of said Exhibit J "Prohibited Items List".

As a result of this restriction, the Concessionaire shall provide consumers shipping services and will cause its Sub-tenants to provide shipping services for those items listed on Exhibit J "Prohibited Items List".

G. Security:

1) Security: The Concessionaire acknowledges and accepts full responsibility for the security and protection of the locations, any improvements thereon, its equipment and property on the Airport, and control of access to the Air Operations Area ("AOA") through the locations by persons and vehicles. The Concessionaire fully understands and acknowledges that any security measures deemed necessary by the Concessionaire for the protection of said locations, equipment and property and access to the AOA through the locations shall be the sole responsibility of the Concessionaire and shall involve no cost to the County.

2) Security Identification Display Areas Access - Identification Badges: The Concessionaire shall be subject to all Departmental requirements and FAA mandates pertaining to the issuance of airport identification badges. Including, but not limited to employee completion of SIDA training conducted by the Department and background checks, as required by the FAA Unescorted Access Privilege Rule. The Concessionaire shall pay, or cause to be paid, to the Department such nondiscriminatory charges, as may be established from time to time, for lost or stolen ID badges and those not returned to the Department in accordance with this covenant. The Department shall have the right to require the Concessionaire to conduct background investigations and to furnish certain data on such employees before the issuance of such ID badges, which data may include the fingerprinting of employee applicants for such badges.

3) AOA - Driver Training: Before the Concessionaire shall permit any employee to operate a motor vehicle of any kind or type on the AOA, the Concessionaire shall require such employee to attend and successfully completed the AOA Driver Training Course conducted from time to time by the Department. The privilege of a person to operate a motor vehicle on the AOA may be withdrawn by the Department for any violation of AOA driving rules. Notwithstanding the above, the Concessionaire shall be responsible ensuring that all such vehicle operators possess current, valid, appropriate Florida driver's licenses.

4) Alcohol and Drug Testing: The Concessionaire acknowledges that the County, as a public agency, sponsors under the provisions of the Airport and Airway Improvement Act of 1982, as amended (the "Act"), has the obligation to establish a drug free workplace and to establish policies and programs to ensure airport safety and security. The Concessionaire acknowledges that Department, on behalf of the County, has the right to require users of the Airport (Concessionaires, Permittees, Licensees, etc.) To establish reasonable programs to further the achievement of the objectives described herein. Accordingly, the Concessionaire shall establish programs for pre-employment alcohol and drug screening for all candidates for employment at the Airport who will as a part of their duties (a) be present on the AOA; (b) operate a motor vehicle of any type on the AOA; or (c) operate any equipment, motorized or not, on the AOA and for the

same or similar screening based upon a reasonable suspicion that an employee, while on duty on the AOA, may be under the influence of alcohol or drugs. Notwithstanding the above, the Concessionaire specifically acknowledges that the County, acting through the Department, has the right and obligation to deny access to the AOA and to withdraw AOA driving privileges from any person who it has a reasonable suspicion to believe is under the influence of alcohol or drugs.

5) Special Programs: The Concessionaire shall ensure that all employees so required participate in such safety, security and other training and instructional programs, as the Department or appropriate Federal agencies may time to time require.

6) Vehicle Permit and Company Identification: Motor vehicles and equipment of the Concessionaire operating on the AOA must have an official motor vehicle identification permit issued pursuant to Operational Directives of the Department. In addition, company identification must be conspicuously displayed on such motor vehicles and equipment.

7) Federal Agencies Right to Consent: The Concessionaire understands and agrees that all persons entering and working in or around arriving international aircraft and facilities used by the various Federal Inspection Services agencies may be subject to the consent and approval of such agencies. Persons not approved or consented to by the Federal Inspection Services shall not be employed by the Concessionaire in areas under the jurisdiction or control of such federal inspection agencies.

8) AOA - Right to Search: The Concessionaire agrees that its vehicles, cargo, goods and other personal property are subject to being searched when attempting to enter or leave and while on the AOA. The Concessionaire further agrees that is shall not authorize any employee or agent to enter the AOA unless and until such employee or agent has executed a written consent-to-search form acceptable to the Department. Persons not executing such consent-to-search form shall not be employed by the Concessionaire at the Airport, in any job requiring access to the AOA.

It is further agreed that the Department has the right to prohibit an individual, agent or employee of the Concessionaire from entering the AOA based upon facts which would lead a person of reasonable prudence to believe that such individual might be inclined to engage in theft, cargo tampering, aircraft sabotage or other unlawful activities. Any person denied access to the AOA or whose prior authorization has been revoked or suspended on such grounds shall be entitled to a hearing before the Director of the Department of his authorized designee within a reasonable time. Prior to such hearing, the person denied access to the AOA shall be advised, in writing, of the reasons for such denial.

The Concessionaire acknowledges and understands that these provisions are for the protection of all users of the AOA and is intended to reduce the incidence of thefts, cargo tampering, aircraft sabotage and other activities at the Airport.

II. MARKET BASKET PRICING POLICY

The Department has instituted a market basket pricing policy to ensure that Airport prices are comparable to retail outlets and dining facilities in the Miami Dade County, Florida area.

The Concessionaire and/or its Sub-tenants shall be required to charge no more than the market basket prices as determined in accordance with the following methodology:

1. **Same or Similar Product Line**: To determine reasonable prices, Concessionaires annually will select three (3) Miami-Dade County sites where visitors may purchase similar product categories excluding stadiums, arenas, amusement and entertainment venues and hotels. Concessionaire and/or its Sub-tenants' prices on any specific item may not exceed the average by more than ten per cent (10%) of those remaining after eliminating the lowest priced-Location. If fewer than three (3) Locations carry a specific item, the maximum permissible price shall not exceed the average by more than ten per cent (10%) of the three (3) highest Locations. If fewer than three (3) Locations carry the item, the maximum permissible price shall not exceed the average price of all Locations carrying the specific item by more than ten per cent (10%). If no other Location carries the item, the Concessionaire shall therefore charge a reasonable price; in which case, the Department reserves the right to determine whether the price is reasonable.

2. **Same Store:** For any or all operations where a Concessionaire currently operates the same or similar store in the Miami-Dade County area, the Concessionaire may not charge more than ten percent (10%) higher charges at the Airport for like or similar merchandise. The Department has the right to survey prices at said store and to use these prices for same or similar merchandise as the primary basis for pricing in leased Locations in all Locations. If no other Location carries the item, the Concessionaire shall therefore charge a reasonable price; in which case, the Department reserves the right to determine whether the price is reasonable.

3. **Price Increases:** The Concessionaire must receive written approval from the Department to increase the price of any item sold or offered by the Concessionaire or its Sub-tenants, and any such request must be accompanied by a price survey. The Department reserves the right to visit said price survey and verify price prior to approval.

   Price Check Policy: Prices may be checked periodically to assure compliance with this policy. A selection of items, picked at random from any Location, is compared to similar items in the price survey. The Department may appoint professional shoppers to survey and shop Locations.

B. Marketing:

The Concessionaire may be responsible for developing and implementing a marketing and promotions program for their Locations. However, the Department will implement a Terminal Wide Marketing Program for the Airport concession program which will be funded by the Concessionaires through the payment of a marketing services fee of one-half of one percent of gross sales.

The Concessionaire shall prepare a marketing plan. The marketing plan shall be submitted to the Department on or before ninety (90) calendar days prior to the commencement of each lease year, and shall represent the upcoming fiscal year for the Department (October 1 – September 30). The Department shall have forty-five (45) calendar days after receipt of the foregoing plan to approve or disapprove the same in its reasonable discretion and if MDAD disapproves the Concessionaire shall operate in substantial conformity with all such plans, approved by the Department, as may be modified from time to time.

The Department reserves the right to request at any time any further submission of plans.

III. MANAGEMENT AND PERSONNEL:

A. Management:

1) Personnel: The Concessionaire shall maintain a full time professional staff during the term of this Agreement of sufficient size, expertise and experience to manage the operations and to serve as a liaison with the Department.

2) General Manager: The Concessionaire shall employ, at no cost to the Department, a full time, dedicated, on-site General Manager experienced in management and supervision who has sufficient authority and responsibility to administer and manage the retail program under this Agreement. The General Manager (or his/her authorized representative) shall be immediately available whenever any of the locations are open, the base of operations of the General Manager shall be at the Airport, and the General Manager shall spend substantially all of his working hours at the Airport. In those cases where the General Manager is scheduled to be absent from the post for a period greater than forty-eight (48) consecutive hours, a substitute General Manager must be appointed from the existing staff, and the Department notified in writing.

The Department reserves the right to require Concessionaire to remove and replace any General Manager or Assistant who, in the opinion of the Department, does not perform up to the standards consistent with the fulfillment of Concessionaire's obligations under this Agreement.

Management Responsibilities: In its capacity as the Concessionaire under this Agreement, and not as an agent of the Department, Concessionaire shall manage the locations in accordance with this Agreement, in furtherance of which Concessionaire shall, among other things, (i) visit each Sub-tenants locations daily to monitor compliance with this Agreement; (ii) use reasonable efforts to remedy problems and issues raised by Airport patrons with respect to the operation of the locations, (iii) answer in writing all written customer complaints within ten (10) calendar days after receipt thereof and furnish a copy of the complaint and said answer to the Department within said ten (10) calendar day period; and (iv) promptly furnish the Department with copies of all written notices received by Concessionaire from any governmental authority or any Sub-tenant with respect to the locations or any Subcontract.

4) Concessionaire shall cause each sub-lease to include provisions requiring the sub-tenants to maintain an adequate sales and work force at all times, including without limitations, sales, cashiers, management and supervisory personnel on-site to fully meet customer needs at all times and use skill and diligence in the conduct of the business. Concessionaire and the sub-tenants shall cause their respective employees to be courteous and helpful to the public at all times.

B. Administrative Functions:

1) The Concessionaire shall provide or cause its Sub-tenants to provide quality control audits and reports covering compliance with contract requirements, cleanliness of the facility, timeliness of service and quality of the product. (MDAD will establish its own rules and regulations that are subject to its unilateral revision and implementation)

2) The Concessionaire shall generate monthly reports to MDAD, including sales by unit, concept and space. Developing annual revenue projections by month, by sub-tenant, concession type, concept, and by space to be updated on a regular basis.

3) Generate monthly airport revenue reports, DBE Monthly Utilization Reports and such other financial and management reports as are usual and customary in sophisticated airport newsstand and specialty retail concession management programs. Prepare other reports and analyses as may be requested periodically by MDAD including number of transactions per period, average transaction value and sales per product category.

4) Maintain total permanent leasable area records on an actual and leased basis and record changes for either total as they occur.

5) Maintain computerized records on a commercially available property management software program acceptable to MDAD. Programs and all

data collected should be available to the Department on-line (digital and electronic).

6) Respond to customer/passenger complaints on behalf of MDAD.

7) Implement any new policies and procedures as directed by MDAD.

8) Ensure payment of rent to MDAD to include all required rental reports. The Concessionaire is prohibited from waiving any right to receive rents, fees, charges, or other revenues that may be paid or payable by any Sub-tenant, user, or occupant under its sub-lease, without the prior written consent of MDAD, and will similarly be prohibited from granting any rent abatements, extensions, or other modifications without such prior written consent.

9) Coordinate and maintain general oversight of deliveries of goods and products from designated on or off-airport storage areas for the locations depicted in Section 1.03 "Locations" and Section 1.04 "Administrative Support Space".

10) Develop, maintain and make available if requested, sub-tenant files to include copies of licenses, permits, insurance certificates, letters of credit, annual DBE certification and correspondence.

11) Develop, manage, and monitor a program to identify and include Local/Small/DBE businesses in the concession programs.

12) Develop a DBE community outreach program for concession opportunities, subject to MDAD approval, and coordinate its implementation with MDAD.

C. Training:

The Concessionaire shall submit a copy of its employee Customer Service Training Program within thirty (30) calendar days of the Effective Date of this Agreement or cause it's Sub-tenants to submit their employee Customer Service Training Program within thirty (30) calendar days of the Effective Date of the Sub-lease Agreement. In addition, the Concessionaire shall annually hereafter establish a training program for its employees and the employees of its Sub-tenants and shall submit a summary report of the training areas covered and the number of participants in the following areas:

I. Retailing in an airport environment
   a. Fluctuations in customer activity
   b. Shipping/handling issues
   c. Early morning/late evening activity
   d. Storage/inventory issues

II. Customer service
   a. Greeting/approaching customers

b. Answering questions
c. Shipping/handling
d. Complaints resolution
e. Establishing priorities
f. Handling emergencies

III. Product knowledge
a. Prices
b. Selection
c. Warranties/guarantees
d. Sizes/types/colors available
e. Shipping/handling

IV. Store operations
a. Hours of operations
b. Inventory
c. Conducting and reporting transactions
d. Management structure
e. Hierarchy of decision-making
f. Attire/appearance standards

D. Staffing:

The Concessionaire and/or its Sub-tenants shall ensure that passengers are provided the highest level of customer service. Adequate staffing levels must be maintained at all times. Peak passenger activity, the nature of the retail operation, and customers' needs shall be taken into account in determining these staffing levels. The level of staffing shall encompass sales employees, as well as store managers and stock or support staff, as appropriate to the operation.

Employee uniforms and nametags will be required in MIA retail operations. All employees are required to wear a uniform in the course of business, the uniform's design, color and overall appearance should be tasteful and in keeping with the theme of the particular type of operation.

E. Meetings:

The Concessionaire shall meet regularly with the Department to discuss matters relating to this Agreement. In addition, at the Department's request, the Concessionaire shall attend other meetings with the County, airlines and any other parties designated by the Department.

APPENDIX C

VOLUNTARY AIRPORT CONCESSION DISADVANTAGED BUSINESS ENTERPRISE PARTICIPATION

APPENDIX C

VOLUNTARY AIRPORT CONCESSION DISADVANTAGED BUSINESS ENTERPRISE PARTICIPATION

I. DEFINITION:

Airport Concession Disadvantaged Business Enterprise (ACDBE): *means a concession that is a for-profit small business concern –*

(1) That is at least 51 percent owned by one or more individuals who are both socially and economically disadvantaged or, in the case of a corporation, in which 51 percent of the stock is owned by one or more such individuals; and
(2) Whose management and daily business operations are controlled by one or more of the socially and economically disadvantaged individuals who own it.

Small business concern: *means a for- profit business that does not exceed the size standards of 49 CFR Part 23 Section 23.33 for airport concession.*

Socially and economically disadvantaged individual: *means any individual who is a citizen (or lawfully admitted permanent resident) of the United States who is –*

(1) Any individual determined by Miami-Dade County to be a socially and economically disadvantaged individual on a case-by-case basis.
(2) Any individual in the following groups, members of which are rebuttably presumed to be socially and economically disadvantaged:

(i) "Black Americans," which includes persons having origins in any of the Black racial groups of Africa;
(ii) "Hispanic Americans," which includes persons of Mexican, Puerto Rican, Cuban, Dominican, Central or South American, or other Spanish or Portuguese culture or origin, regardless of race;
(iii) "Native Americans," which includes persons who are American Indians, Eskimos, Aleuts, or Native Hawaiians;
(iv) "Asian-Pacific Americans," which includes persons whose origins are from Japan, China, Taiwan, Korea, Burma (Myanmar), Vietnam, Laos, Cambodia (Kampuchea), Thailand, Malaysia, Indonesia, the Philippines, Brunei, Samoa, Guam, The U.S. Trust Territories of the Pacific Islands (Republic of Palau), the Commonwealth of the Northern Marianas Islands, Macao, Fiji, Tonga, Kirbati, Juvalu, Nauru, Federated States of Micronesia, or Hong Kong;
(v) "Subcontinent Asian Americas," which includes persons whose origins are from India, Pakistan, Bangladesh, Bhutan, the Maldives Islands, Nepal or Sri Lanka;
(vi) Women;
(vii) Any additional groups whose members are designated as socially and economically disadvantaged by the Small Business Administration, at such time as the Small Business Administration designation becomes effective.
Tribally-owned concern means any concern at least 51 percent owned by an Indian tribe as defined in this section.

APPENDIX C

VOLUNTARY AIRPORT CONCESSION DISADVANTAGED BUSINESS ENTERPRISE PARTICIPATION

II. ACDBE PARTICIPATION

ACDBE participation to be submitted with the proposal by each Bidder/Proposer must contain at least the following:

Signed Schedule of Participation (ACDBE APPENDIX 2) and Signed Letter of Intent (ACDBE APPENDIX 3) by the Bidder/Proposer of the percentage of participation by an ACDBE Firm the Bidder/Proposer intends to have in this Agreement and how the Bidder/Proposer intends to achieve such stated participation.

Below is the documentation for ACDBE Participation for any one or combination of the following:

(a) If Bidder/Proposer intends to meet the ACDBE Participation as an ACDBE itself the Bidder/Proposer shall submit: A Schedule of Participation (ACDBE APPENDIX 2); Letter of Intent (ACDBE APPENDIX 3); ACDBE Certification or applied for ACDBE Certification to the Miami-Dade County, Department of Small Business Development (SBD) (Phone: (305) 375-3111 or the Florida Uniform Certification Program (FLUCP) at (850) 414-4747 or their web address **http. /www.bipincwebapps.com/biznetflorida/.** Explanation of participation by the ACDBE firm in management and day-to-day operation; and Financial participation by the ACDBE Firm Proposer in gross revenues from this agreement.

(b) If Bidder/Proposer intends to meet the ACDBE participation as a partnership or joint venture, the Bidder/Proposer must submit: A Schedule of Participation (ACDBE APPENDIX 2); Letter of Intent (ACDBE APPENDIX 3); Partnership or joint venture agreement; An explanation of participation by the ACDBE participation in the management and day-to-day operations; Financial participation by the ACDBE Firm to meet the ACDBE participation in gross revenues; ACDBE Certification or applied for ACDBE Certification to the Miami-Dade County, Department of Small Business Development (SBD) (Phone: (305) 375-3111 or the Florida Uniform Certification Program (FLUCP) at (850) 414-4747 or their web address http.//www.bipincwebapps.com/biznetflorida/; of the ACDBE Joint Venturer or partner; and Experience of ACDBE joint venturer or partner must be listed on the experience sheet. (ACDBE APPENDIX 4).

(c) If the Bidder/Proposer intends to meet the ACDBE Participation through subcontracting, the Bidder/Proposer must submit: A Schedule of Participation (ACDBE APPENDIX 2); Letter of Intent (ACDBE APPENDIX 3); A listing of those activities which the Proposer intends to subcontract and the estimated percentage of gross revenues such subcontracted services will represent of the gross revenues from all activities under the agreement that will be subcontracted; ACDBE Certification or applied for ACDBE Certification to the Miami-Dade County, Department of Small Business Development (SBD) (Phone: (305) 375-3111 or the Florida Uniform Certification Program (FLUCP) at (850) 414-4747 or their web address http.//www.bipincwebapps.com/biznetflorida/; and Experience of ACDBE subcontractors must be listed on the experience sheet. (ACDBE APPENDIX 4)

MDAD may request any other information as may be required to determine the listed ACDBE Firm's Qualifications. Agreements between a Bidder/Proposer and an ACDBE Firm in which the ACDBE firm promises not to provide quotations to other bidder/proposers is prohibited. The listing of an ACDBE Firm by a Bidder/Proposer as part of its Airport Concession Disadvantaged Business Enterprise Participation Plan shall constitute a representation by the Bidder/Proposer that such ACDBE Firm is

Qualified and not Unavailable, and a commitment by Bidder/Proposer that if it is awarded this agreement, it will utilize such ACDBE firms listed for the portion of the contract and at the percentage of gross revenues set forth in its submission, subject to the terms of these Provisions.

III. SUBSTITUTION OF ACDBE FIRMS FOR THOSE LISTED ON THE AIRPORT CONCESSION DISADVANTAGED BUSINESS ENTERPRISE PARTICIPATION DOCUMENTS PRIOR TO CONTRACT AWARD

A Bidder/Proposer may not change information required by these Provisions from that provided in its Disadvantaged Business Enterprise Participation unless authorized to do so by the Director, or his designee, in writing. Such written authorization may be given upon a receipt of written request from the Proposer outlining the reason the request for change is being submitted specific details of the requested change and impact of the requested change on the ACDBE Participation as originally submitted. Failure on the part of the Bidder/Proposer to comply with all of the requirement of these Provisions shall be grounds for the recommendation of the Director to the Board of County Commissioners that the Contract not be awarded to the Bidder/Proposer.

IV. REQUIREMENTS AND PROCEDURES SUBSEQUENT TO CONTRACT AWARD

A. Airport Concession Disadvantaged Business Enterprise Participation: The Proposer shall contract with those ACDBE firms listed on the Bidder/Proposer's Airport Concession Disadvantaged Business Enterprise Participation Documents, and shall thereafter neither terminate such ACDBE Firms nor reduce the scope of the work to be performed by, or decrease the percentage of participation by the ACDBE Firm(s) there under without the prior written authorization of the Director.

B. Substitution of ACDBE Firms:

1. Excuse from entering in agreements with ACDBE Firms. If prior to execution of an agreement required by these Provisions, the Bidder/Proposer submits a written request to the Director and demonstrates to the satisfaction of the Director that, as a result of a change in circumstances beyond its control of which it was not aware and could not reasonably have been aware until subsequent to the date of award of the Contract, an ACDBE Firm which is to enter into such agreement has become not qualified, or that the ACDBE Firm has unreasonable refused to execute the agreement, the successful Bidder/Proposer shall be excused from executing such agreement.

2. Rightful Termination of agreements entered into with ACDBE firms. If after execution of an agreement required by these Provisions, the Bidder/Proposer submits a written request to the Director and demonstrates to the satisfaction of the Director that, as a result of a change in circumstance beyond its control of which it was not aware and could not reasonably have been aware until subsequent to the date of execution of such agreement, an ACDBE Firm which entered into such agreement has become not qualified or has committed and failed to remedy a material breach of the agreement, the Bidder/Proposer shall be entitled to exercise such rights as may be available to it to terminate the agreement.

3. Determination of Excuse of Rightful Termination. If the Bidder/Proposer at any time submits a written request under these Provisions to the Director, as soon as practicable, shall determine whether the Bidder/Proposer has made the requisite demonstration, and shall not determine that such a demonstration has not been made without first providing the Bidder/Proposer an opportunity to present pertinent information and arguments.

4. Alternative ACDBE Firm Participation Agreements. If the Bidder/Proposer is excused from entering or rightfully terminates an agreement with an ACDBE firm listed as part of the Bidder/Proposer's ACDBE Participation, the Bidder/Proposer shall make every reasonable effort to enter into an alternative agreement for at least ACDBE Participation percentage as originally submitted as part of their proposal for this contract with another certified ACDBE firm. The Bidder/Proposer shall be deemed to have satisfied the requirements of this section if:

   a. It shall enter each such alternative agreement(s) for at least the ACDBE participation as originally proposed.

   b. It demonstrates to the satisfaction of the Director that it has made every reasonable efforts to negotiate with an ACDBE Firm in an attempt to enter into an agreement, but that it was unable to enter into such agreement because the ACDBE Firms were (i) not qualified; (ii) Unavailable; or (iii) although Qualified and not Unavailable, was unwilling or unable to reach an agreement.

   c. Any situation covered by this section arises; the ACDBELO shall promptly meet with the Bidder/Proposer and provide him an opportunity to demonstrate compliance with these Provisions.

V. **Continued Compliance** - MDAD shall monitor the compliance of the Bidder/Proposer with the requirements during the term of the contract. MDAD shall have access to the necessary records to examine such information as may be appropriate for the purpose of investigating and determining compliance with these. Provisions including, but not limited to, manpower tables, records for expenditures, observations at the job site, and contracts between the Bidder/Proposer and his subcontractors, suppliers, etc., entered into during the life of the Contract.

VI. **Sanctions for Violations** - If at any time MDAD has reason to believe that the Bidder/Proposer is in violation of is obligation under these Provisions, or has otherwise failed to comply with these Provisions, MDAD may, in addition to pursuing any other available legal remedy, commence proceeding to impose sanctions which may include, but are not limited to, one or more of the following:

1. The suspension of any payment or part thereof due the ACDBE Subtenant, Joint Venture Partner or Subcontractor from the Bidder/Proposer until such time as the issues concerning the Proposers Compliance are resolved.

2. The termination or cancellation of the Contract in whole or in part, unless the Bidder/Proposer demonstrates within a reasonable time its compliance with the terms of these Provisions.

3. The denial to the Bidder/Proposer of the right to participate in any further contracts awarded by MDAD for a period of not longer than three years. No such sanction shall be imposed by MDAD upon the Bidder/Proposer except pursuant to a hearing conducted by the ACDBELO and/or Director.

ACDBE Reporting Requirements – The Bidder/Proposer shall submit a Notarized Miami-Dade Aviation Department Concession Monthly Utilization Report (**Appendix 6**) for Contracts with ACDBE Participation. In addition, each Joint Venture partner must submit a Notarized Monthly Report of ACDBE Joint Venture Activity (**Appendix 7**) providing documentation on the achievement of the ACDBE Joint Venture partner to the Minority Affairs Division.

DEMONSTRATION OF GOOD FAITH EFFORTS
ACDBE UTILIZATION FORM

[Forms ACDBE Utilization Form, Schedule of Participation and Letter of Intent are provided as part of the solicitation documents.]

The undersigned bidder/offeror has satisfied the requirements of the bid specification in the following manner (please check the appropriate space).

_____ The bidder/offeror is committed to a minimum of _____% ACDBE utilization in this Contract.

_____ The bidder/offeror (if unable to meet the ACDBE goal of _____%) is committed to a minimum of _____% ACDBE utilization on this contract and submits documentation demonstrating good faith efforts.

Name of bidder/offeror's firm: _____

State Registration No. _____

By: _____ Title: _____
(Signature)

_____ Date: _____
(Print Name)

SCHEDULE OF PARTICIPATION BY ACDBE FIRMS

Listed below is the information pertaining to "certified" ACDBE firms who will be participating in this contract.

NAME OF ACDBE FIRMS	DESCRIPTION OF SERVICES	% OF BID/PROPOSAL

Form to be completed and signed by the Bidder/Proposer. I certify that the representation contained in this Schedule of Participation are to the best of my knowledge true and accurate.

Signature of Proposer **Date**

Print Name **Title** **Company Name**

LETTER OF INTENT
AIRPORT CONCESSION DISADVANTAGED BUSINESS ENTERPRISE PARTICIPATION

To:_____

Project:_____

Contract Number:_____ **Total % of Bidder/Proposal:**_____

The undersigned holds ACDBD Certificate No._____ **expiring on,**_____ **20**_____.

The undersigned intends to perform the following work in connection with the above Bid/ Proposal (Describe):_____

Description of Services	**% of Bid/Proposal**

Total%_____

Signature of ACDBE_____ **Date**_____

Print Name_____ **Title**_____

ACDBE Firm_____

CONCESSION MONTHLY UTILIZATION REPORT

Reporting Period: ◦ Name of Prime Concessionaire: _____ YTD ACDBE Goal:

From: _____ To:_____ Lease Number: _____ Required_____

Actual _____

Name and Address	Date of Award	Terms of Agreement	Agreement Amount	Modification Amount
		Starting: _____ Expiration: _____ Options: _____		

Amount of Revenues this Period $ _____ ACDBE Revenues for this Period $ _____

Operational Expenses this Period $ _____ ACDBE Operational Expenses this Period $ _____

Total Revenues to Date $ _____ Total ACDBE Revenues to Date $ _____

Total Operational Expenses to Date $_____ Total ACDBE Operational Expenses to Date $ _____

AIRPOR T CONCESSION DISADVANTAGED BUSINESS ENTERPRISES (ACDBE) OPPORTUNITIES

Name of ACDBE Firm	ACDBE Goal	Revenue This Period	Revenues to Date	Operational Expenses This Period	Operational Expenses to Date	Concession Opening Date	Actual Opening Date

I attest that the above information is accurate and complete.

_____ _____ _____ _____ (___)_____

Authorized Signature Print Name Title Date Telephone

Sworn before me: This_____ day of _____ 20___

Notary Public: _____

Additional page (s) may be used if needed.

Monthly Report Of ACDBE Joint Venture Activity

Joint Venture Partner: _____

Reporting Month: _____

Function	Date Performed	Location	# of Hours Per Employee	# of Hours Extended	Attach Support Documentation	JV Partner Signature
		Total				

I attest that the above information is accurate and complete.

_____ _____

For Joint Venture Partner (ACDBE), Please Print and Sign Date

_____ _____

For Joint Venture (Prime), Please Print and Sign Date

Sworn before me: This _____ day of _____ 20 _____

Notary Public: _____

Additional page (s) may be used if needed.

Revised 11/22/06

AIRPORT CONCESSION DISADVANTAGED BUSINESS ENTERPRISE (ACDBE)
EXPERIENCE SHEET

ACDBE NAME _____

ADDRESS _____

_____

_____

NAME OF CLIENT COMPANY NAME AND ADDRESS	DESCRIPTION OF SERVICES PROVIDED TO CLIENT	GROSS REVENUES	CALENDAR YEAR
(A)			
(B)			
(C)			

NOTES:
USE A SEPARATE SHEET FOR EACH DBE COMPANY.
ADDITIONAL PAGES MAY BE ATTACHED AS NECESSARY

MIAMI-DADE COUNTY

Business Development
111 NW 1st Street • 19th Floor
Miami, Florida 33128-1906
T 305-375-3111 F 305-375-3160

miamidade.gov

ADA Coordination
Agenda Coordination
Animal Services
Art in Public Places
Audit and Management Services
Aviation
Building
Building Code Compliance
Business Development
Capital Improvements
Citizens' Independent Transportation Trust
Commission on Ethics and Public Trust
Communications
Community Action Agency
Community & Economic Development
Community Relations
Consumer Services
Corrections & Rehabilitation
Cultural Affairs
Elections
Emergency Management
Employee Relations
Empowerment Trust
Enterprise Technology Services
Environmental Resources Management
Fair Employment Practices
Finance
Fire Rescue
General Services Administration
Historic Preservation
Homeless Trust
Housing Agency
Housing Finance Authority
Human Services
Independent Review Panel
International Trade Consortium
Juvenile Assessment Center
Medical Examiner
Metro-Miami Action Plan
Metropolitan Planning Organization
Park and Recreation
Planning and Zoning
Police
Procurement Management
Property Appraisal
Public Library System
Public Works
Safe Neighborhood Parks
Seaport
Solid Waste Management
Strategic Business Management
Team Metro
Transit
Urban Economic Revitalization
Vizcaya Museum And Gardens
Water & Sewer

April 12, 2006

CERT. NO: 11586
APPROVAL DATE(s): 04/07/2006 - DBE
EXPIRATION DATE: 03/31/2009

Sirilak Briggs
TAXCO STERLING CO., INC.
10282 John Hollow Rd .
Vienna, VA 22182-0000

Dear Sirilak Briggs:

The Department of Business Development has completed its review of your application and attachments submitted for certification as a Disadvantaged Business Enterprise (DBE) and hereby approves your firm as a DBE in the categories listed below. Your DBE certification is valid for three (3) years, expiring as noted above and your firm will be included in our registry of certified businesses.

While DBE certification qualifies your firm to bid and participate on projects with DBE participation requirements, please note that this certification does not allow you to participate on projects with Community Small Business Enterprise and/or Community Business Enterprise (CSBE/CBE) program requirements unless you are specifically certified in these programs. Please note that certification as a small business enterprise continues to be valid for one (1) year.

If any changes occur within your company during the certification period (such as ownership, address, telephone number, trade category, licensing, technical certification, bonding capacity, or if the business ceases to exist) you must notify this office in writing immediately. It is imperative that we maintain current information on your company at all times. All inquiries or changes related to this certification should be directed to the Certification Unit between the hours of 8:00 a.m. and 5:00 p.m. Monday through Friday. This department will forward to you an application for re-certification (a much shorter process) within four (4) weeks of the above expiration date.

We look forward to your participation in Miami-Dade County's small and/or disadvantaged business programs.

Sincerely,

Marsha E. Jackman
Director, DBD

CATEGORIES: (Your firm may bid or participate on contracts only under these categories)
Gift, Novelty, And Souvenir Stores (DBE)

DBDAP0020

SCHEDULE OF PARTICIPATION BY ACDBE FIRMS

Listed below is the information pertaining to "certified" ACDBE firms who will be participating in this contract.

NAME OF ACDBE FIRMS	DESCRIPTION OF SERVICES	% OF BID/PROPOSAL
Taxco Sterling Co., Inc.	high end jewelry, watches, accessories	100%

Form to be completed and signed by the Bidder/Proposer. I certify that the representation contained in this Schedule of Participation are to the best of my knowledge true and accurate.

Signature of Proposer		Date
Sirilak Briggs	President	Taxco Sterling Co., Inc.
Print Name	**Title**	**Company Name**

LETTER OF INTENT
AIRPORT CONCESSION DISADVANTAGED BUSINESS ENTERPRISE PARTICIPATION

To: Miami Dade Aviation Department

Project: MDAD-01-08

Contract Number: Package Two **Total % of Bidder/Proposal:** 100%

The undersigned holds ACDBD Certificate No. 11586 **expiring on,** 3/31 20 09 .

The undersigned intends to perform the following work in connection with the above Bid/ Proposal (Describe): Proposer itself is 100% ACDBE so we will perform all work.

Description of Services	% of Bid/Proposal
High end jewelry, watches, accessories	100%

Total% 100%

Signature of ACDBE _____ **Date** 9-9-08

Print Name Sirilak Briggs **Title** President

ACDBE Firm Taxco Sterling Company, Inc.

MIAMI-DADE COUNTY
BOARD OF COUNTY COMMISSIONERS
OFFICE OF THE COMMISSION AUDITOR

Legislative Notes

Agenda Item: 8(A)1(F)

File Number: 090872

Committee(s) of Reference: Board of County Commissioners

Date of Analysis: April 20, 2009

Type of Item: Award Recommendation

Summary

This resolution awards and authorizes the Mayor or his designee to execute a Lease and Concession Agreement to Taxco Sterling Co. (Taxco) for Package 2 of the 2008 Retail, Food and Beverage Concessions Program RFP MDAD-01-08.

The RFP MDAD 01-08 for the Retail, Food and Beverage Concessions Program consists of three (3) packages for a term of eight (8) years with one two (2) year renewal option.

Package one consists of a retail location for Fashion Accessories- Sunglasses located in the North Terminal with a minimum acceptable Minimum Annual Guarantee (MAG) of $47,489 or 14% of gross revenues. **Package two consists of a retail location for High End Jewelry located in the North Terminal with a minimum acceptable MAG of $65,148 or 17% of gross revenues.** Package three consists of a retail location for a Walkaway-Coffee Shop located on the third floor of the South Terminal with a minimum acceptable MAG of $46,298 or 15% of gross revenues.

All three packages have voluntary Airport Concession Disadvantaged Business Enterprise (ACDBE) contract measures.

Taxco is an ACDBE and will perform at one hundred percent (100%). According to the Small Business Development Certified Firms report dated April 13, 2009, Taxco is not listed as an ACDBE firm.

Taxco principals are Sirilak Briggs and Joshua A. Briggs, the address is 10282 Johns Hollow Road, Vienna, VA and it was filed with the Florida Department of State Division of Corporations on July 22, 2008.

Background and Relevant Legislation

This package was originally part of RFP MDAD-04-07 to select firms to finance, design, develop, furnish, maintain and operate retail concessions at Miami International Airport consisting of five (5) packages. However, at the March 13, 2008, Airport and Tourism Committee meeting, a substitute item was

presented, R-328-08, removing three of the five packages and issuing RFP MDAD-04-07 for only two packages. Both packages had an ACDBE goal of 30% of gross revenues.
The three remaining packages were removed from the original RFP to encourage more local participation and to provide MDAD with additional time to properly craft the evaluation process.
On June 3, 2008, the Board of County Commissioners adopted R-611-08 authorizing the issuance of the new RFP MDAD-01-08, participation in the ACDBE program was voluntary in the new RFP.

Policy Change and Implication

None

Budgetary Impact

The MAG submitted by Taxco is $216,000.

Prepared by: Bia Marsellos