Memorandum

MIAMI-DADE COUNTY

(Public Hearing 5-19-09)

Date:	April 21, 2009
To:	Honorable Chairman Dennis C. Moss and Members, Board of County Commissioners
From:	George M. Burgess County Manager
Subject:	Downtown Doral Multipurpose Maintenance and Street Lighting Special Taxing District

Agenda Item No. 5(A)

Recommendation

It is recommended that the Board of County Commissioners (BCC) approve a petition submitted in accordance with Article 1, Chapter 18 of the Code for creation of the Downtown Doral Multipurpose Maintenance and Street Lighting Special Taxing District. The creation of this District is a requirement of the City of Doral and Public Works Department policy. The multipurpose maintenance program will remain dormant until such time as any Homeowners Association or the Downtown Doral Community Development District (CDD) fails to provide the required maintenance services.

Scope

This proposed special taxing district lies within Commission District Twelve (12) and will provide street lighting services and other multipurpose maintenance services, if and when necessary.

Fiscal Impact/Funding Source

Creation of this District will result in no economic impact on the County's budget. The developer will fund the costs to install, maintain and operate the District's street lighting system until the Downtown Doral development is completed at which time, on a fiscal year basis, the District will assume operation and maintenance of the street lights. Maintenance services which cannot be equitably or conveniently provided by the property owners shall be provided by the District upon the failure of any Homeowners Association or the CDD to provide the required maintenance services and such services will be funded by special assessments against benefited property.

Upon completion of the Downtown Doral project, the economic impact on the private sector will be a perpetual annual special assessment for the cost of street lighting to all property owners within the District, and when necessary, a special assessment for other district maintenance services. The Florida Power and Light Company will become the owner of the street lighting system at that time and therefore will derive revenues from it.

At this time there will be no increase or decrease in County staffing due to this District. The private sector may increase its staffing levels to provide the service requirements created by this special taxing district.

Track Record/Monitoring

Contingent upon BCC approval of this District and Downtown Doral's donation of the street lighting system to the Florida Power and Light Company, the Public Works Department's Special Taxing Districts Division will monitor the Florida Power and Light Company's agreement and billing process. In the event any Homeowners Association or the CDD fail to provide maintenance services, the Miami-Dade County Park and Recreation and Public Works Departments will provide the District's required maintenance services and cause implementation of special assessments for the costs of such services against benefited property, as well as contract monitoring, compliance and enforcement.

Background

Boundaries:	On the North, NW 54th Street; On the East, NW 79th Avenue and theo. NW 84th Avenue; On the South, theo. NW 52nd Street and theo. NW 48th Street; On the West, NW 87th Avenue.
Number of Parcels:	30
Number of Owners:	2
Number of Owners With Homestead Exemption Signing Petition:	None - The petition was submitted by Koala Miami Realty Holding Company, Inc., and 7950 Professional Center Phase LLC, property owners and developers.
Preliminary Public Meeting:	None necessary.
Required Referendum:	The creation of the District will be subject only to BCC approval; no election will be necessary as 100 percent of the property owners signed the petition.
Preliminary Assessment Roll:	The street lighting assessment roll is submitted on the same agenda as a separate agenda item for consideration and adoption by the BCC and contingent upon the Board's approval of this District's creation ordinance. In the event any Homeowners Association or the CDD fails to provide the maintenance services below, a hearing to adopt the multi-purpose maintenance assessment roll will be conducted. The implementation of the assessment rolls will be in accordance with the procedures defined in Chapter 18 of the Code.

Proposed Service and Improvements

Multipurpose Maintenance Services:	The creation of this District is requested to maintain medians and swale areas adjacent to public rights-of-way within the District boundaries should any Homeowners Association or the CDD fail to provide these services. Failure to provide maintenance within the private road area is defined in a non-exclusive easement granted to Miami-Dade County and recorded in the Public Records.
Street Lighting Improvements:	The installation, operation and maintenance of one hundred and fifty-six (156) 175 watt metal halide Acorn style post-top streetlights mounted on Washington style concrete poles.
Estimated Initial Billing:	Assessment billed annually as an itemized portion of the annual tax bill.

Initial Start of Service

Multipurpose Maintenance Services: October 1st following cessation of maintenance services by the developer and failure of any Homeowners Association or the CDD to provide services.

Street Lighting Service: October 1st following build out of the Downtown Doral development and the acceptance of the lighting system within the public rights-of-way by the Florida Power and Light Company.

Method of Apportionment

Maintenance Services:	Square Footage
Street Lighting Service:	Front Footage

Estimated Annual Total Cost	**First Year**	**Second Year**
Maintenance Services:	No Service	$184,405
Street Lighting Service:	$58,540	$51,435

Estimated Annual Rates	**First Year**	**Second Year**
Maintenance Services:	No Service	$0.0552
Street Lighting Service:	$3.750	$3.295

Estimated Annual Assessments	**First Year**	**Second Year**
Maintenance Services:		
For A 94,220 Sq. Ft. Tract:	No Services	$5,201
For A 120,328 Sq. Ft. Tract:		$6,642
For A 143,249 Sq. Ft. Tract:		$7,907
Street Lighting Service:	**First Year**	**Second Year**
For A 94,220 Sq. Ft. Tract:	$971	$853
For A 120,328 Sq. Ft. Tract:	$3,266	$2,870
For A 143,249 Sq. Ft. Tract:	$2,044	$1,796

The annual assessments shown above are representative of costs for property within this District.

State or Federal grants are not applicable to this special taxing district.

Each special taxing district is unique due to its geographical boundaries, affected property owners, and level of services to be provided. Creation of a new special taxing district to provide these services is the best and most cost-effective method to achieve this benefit.

In compliance with the provisions of Section 18-3 (c) of the Code, I have reviewed the facts submitted by the Public Works Director and concur with her recommendation that this District be created pursuant to Section 18-22.1 of the Code.

Assistant County Manager

MEMORANDUM
(Revised)

TO: Honorable Chairman Dennis C. Moss and Members, Board of County Commissioners

DATE: May 19, 2009

FROM: R. A. Cuevas, Jr. County Attorney

SUBJECT: Agenda Item No. 5(A)

Please note any items checked.

_____ **"4-Day Rule" ("3-Day Rule" for committees) applicable if raised**

_____ **6 weeks required between first reading and public hearing**

_____ **4 weeks notification to municipal officials required prior to public hearing**

_____ **Decreases revenues or increases expenditures without balancing budget**

_____ **Budget required**

_____ **Statement of fiscal impact required**

_____ **Bid waiver requiring County Mayor's written recommendation**

_____ **Ordinance creating a new board requires detailed County Manager's report for public hearing**

_____ **Housekeeping item (no policy decision required)**

✓ **No committee review**

Approved _____ Mayor

Veto _____

Override _____

Agenda Item No.5 (A)
5-19-09

ORDINANCE NO. _____

ORDINANCE CREATING AND ESTABLISHING A SPECIAL TAXING DISTRICT IN MIAMI-DADE COUNTY, FLORIDA, KNOWN AND DESCRIBED AS DOWNTOWN DORAL MULTIPURPOSE MAINTENANCE AND STREET LIGHTING SPECIAL TAXING DISTRICT IN ACCORDANCE WITH THE PROVISIONS OF CHAPTER 18 OF THE CODE OF MIAMI-DADE COUNTY, FLORIDA; AND PROVIDING AN EFFECTIVE DATE

WHEREAS, the Miami-Dade County Home Rule Amendment to the Florida Constitution (Article VIII, Section 6) grants to the electors of Miami-Dade County power to adopt a home rule charter of government for Miami-Dade County, Florida, and provides that such charter may provide a method for establishing special taxing districts and other governmental units in Miami-Dade County from time to time; and

WHEREAS, the Home Rule Charter adopted by the electors of Miami-Dade County on May 21, 1957, provides that the Board of County Commissioners, as the legislative and governing body of Miami-Dade County, shall have the power to establish special purpose districts within which may be provided essential facilities and services, including landscape improvement and maintenance programs and street lighting, and that all funds for such districts shall be provided by service charges, special assessments, or general tax levies within such districts only, and that the County Commission shall be the governing body of all such districts; and

WHEREAS, pursuant to such provisions of the Florida Constitution and the Home Rule Charter, the Board of County Commissioners duly enacted Chapter 18 of the Code of Miami-Dade County, Florida, providing for the creation and establishment of special taxing districts and prescribing the procedures therefore; and

WHEREAS, in accordance with the provisions of Chapter 18 of the Code of Miami-Dade County, Florida, a petition for the creation of a special taxing district to be known as the DOWNTOWN DORAL MULTIPURPOSE MAINTENANCE AND STREET LIGHTING SPECIAL TAXING DISTRICT duly signed by 100% of the owners (developer/petitioner) of property within the proposed district, was filed with the Clerk of the County Commission. Such petition prayed for the creation and establishment of a special taxing district for the purpose of providing maintenance of median and swale areas and street lighting services located within the public domain to be financed solely by means of special assessments levied and collected within the area therein and hereinafter described; and

WHEREAS, upon receipt of such petition the Clerk of the County Commission transmitted a copy thereof to the County Manager who examined it and filed a written report with the Clerk certifying that such petition was sufficient in form and substance and signed and properly presented in accordance with the requirements of Chapter 18 of the Code of Miami-Dade County, Florida; and

WHEREAS, the County Manager, after making appropriate investigations, surveys, plans and specifications, compiled and filed with the Board of County Commissioners his written report and recommendations setting forth the boundaries of the proposed special taxing district, the location, nature and character of the multipurpose maintenance programs and street lighting services to be provided within the proposed district, an estimate of the cost of maintaining and

operating such improvements and/or services, his certification that the proposed district improvements and multipurpose maintenance programs and/or services conform to the master plan of development for the County, and setting forth his recommendations concerning the need for and desirability of the requested district, the ability of the affected property to bear special assessments to fund the cost of maintaining and operating such improvements and multipurpose maintenance programs and/or services, and an estimate of the amount to be assessed against each square foot for landscape and other maintenance programs and each front foot for street lighting services of the benefited property within the proposed district, and expressing his opinion that the property to be specially assessed will be benefited in excess of the special assessments to be levied, and the County Manager attached to such report and recommendations a map or sketch showing the boundaries and location of the proposed district. Such "Report and Recommendations" of the County Manager was filed with the Clerk and transmitted to the Chairman; and

WHEREAS, it appearing to the Board of County Commissioners from such report of the County Manager and other investigations that the district petitioned for would be of special benefit to all property within the proposed boundaries and that the total amount of the special assessments to be levied would not be in excess of such special benefit; the Clerk of the Board certified the place, date and hour for a public hearing on the petition of the owner/developer/petitioner and the report and recommendations of the County Manager -- said hearing was held on Tuesday, . Copies of the public notice were duly published in a newspaper of general circulation published in Miami-Dade County, Florida, and copies thereof were posted in not less than five (5) public places within the proposed district, and copies thereof were mailed to all owners of taxable real property within the boundaries of the

proposed district as their names and addresses appear on the latest Miami-Dade County Real Property Tax Roll; and

WHEREAS, pursuant to said notice, the Board of County Commissioners on Tuesday, , held a public hearing, at which all interested persons were afforded the opportunity to present their objections, if any, to the creation and establishment of the proposed special taxing district; and

WHEREAS, the Board of County Commissioners, upon review and consideration of the report and recommendations of the County Manager and the views expressed by the property owners within the proposed special taxing district, has determined to create and establish such special taxing district in accordance with the report and recommendations of the County Manager, and the provisions of Chapter 18 of the Miami-Dade County Code ,

NOW, THEREFORE, BE IT ORDAINED BY THE BOARD OF COUNTY COMMISSIONERS OF MIAMI-DADE COUNTY, FLORIDA:

Section 1. In accordance with the provisions of Chapter 18 of the Code of Miami-Dade County, Florida, a special taxing district to be known and designated as the DOWNTOWN DORAL MULTIPURPOSE MAINTENANCE AND STREET LIGHTING SPECIAL TAXING DISTRICT is hereby created and established within the municipal limits of the City of Doral, Florida. Pursuant to Chapter 18 of the Code, Miami-Dade County has received approval from the City of Doral to create this special taxing district.

Section 2. The area or boundaries of this proposed special taxing district are as follows:

> A portion of Section 22, Township 53 South, Range 40 East, Miami-Dade County, Florida; being more particularly described as follows:
>
> All of the S ½ of the NW ¼, the N ½ of the NW ¼ of the SW ¼, and the N ½ of the SW ¼ of the NE ¼, all of said Section 22;
>
> Less and excepting the following parcels:

The platted lands, including tracts and roadways within the limits of "The Koger Center" as recorded in Plat Book 132, Page 73 of the Public Records of Miami-Dade County, Florida;

The 40.00 foot platted right-of-way for NW 87th Avenue, the 35.00 foot platted right-of-way for NW 54th Street,

That portion of the platted right-of-way lying northwesterly of the 25.00 foot radius arc and south of the south right-of-way line of NW 54th Street and east of the east right-of-way line of NW 79th Avenue,

The 35.00 foot platted right-of-way for NW 79th Avenue,

That portion of the platted right-of-way lying northeasterly of the 25.00 foot radius arc and south of the south right-of-way line of NW 54th Street and west of the west right-of-way line of NW 79th Avenue,

and less also:

The east 29.50 feet of the north 40.00 feet of Tract 34 and the west 50.50 feet of the north 40.00 feet of Tract 35, "Koger Executive Center", according to the plat thereof as recorded in Plat Book 91, Page 38 of the Public Records of Miami-Dade County, Florida (a.k.a. Downtown Doral).

The area and location of this proposed special taxing district are shown on the map or sketch which is made a part hereof by reference.

Section 3. The service to be provided within this proposed special taxing district will initially consist of the following:

A) Maintenance of median and swale areas adjacent to public rights-of-way within the District boundaries should any Homeowners Association or the CDD fail to provide these services. Failure to provide maintenance within the private road area is defined in a non-exclusive easement granted to Miami-Dade County and recorded in the Public Records.

B) Installation, operation and maintenance of one hundred and fifty-six (156) 175 watt metal halide Acorn style post-top streetlights mounted on Washington style concrete poles.

Section 4. A) Multipurpose Maintenance – The combined costs of the multipurpose maintenance project and operation of the district's improvements including services,

engineering, administration, billing, collecting and processing for the first year is provided by petitioner, and $184,405 for the second year. It is estimated that the cost per assessable square foot of real property within the proposed district for the initial multipurpose maintenance program shall be provided by petitioners for the first year, and $0.0552 for the second year. The second and succeeding years' assessments will be adjusted from actual experience.

B) Street Lighting Services – The installation of the street lighting project will be accomplished by the Downtown Doral Community Development District, and upon acceptance of the project by Miami-Dade County, ongoing funding will be pursuant to an agreement between Miami-Dade County and the Florida Power and Light Company. The combined costs of the street lighting project and operation of the district's improvements including service, maintenance, electricity, engineering, administration, billing, collection and processing for the first year following acceptance of the project by Miami-Dade County are estimated to be $58,540. The combined costs of the street lighting project and operation of the district's improvements including service, maintenance, electricity, engineering, administration, billing, collection and processing for the second year are estimated to be $51,435. The estimated cost per assessable front foot of real property within the proposed district for the first year following acceptance of the project is $3.750. The estimated cost per assessable front foot of real property within the proposed district for the second year is $3.295. The second and succeeding years' assessments will be adjusted from actual experience.

Section 5. A) Multipurpose Maintenance – Miami-Dade County, as administrator of this district's maintenance program, is directed to provide service by the most effective and efficient means available on a yearly basis, as detailed in the County Manager's report which is made a part hereof by reference. If there is a proposed significant change to the level of services to be

provided, the Park and Recreation Department shall conduct a meeting in the community, inviting all affected district property owners for the purpose of reviewing the district's budget and level of services.

B) Street Lighting Service – The proposed Street Lighting agreement between Miami-Dade County and Florida Power and Light Company is hereby approved and made a part hereof by reference, and the County Manager or designee and the Clerk or Deputy Clerk of the County Commission are hereby authorized and directed to execute said agreement for and on behalf of Miami-Dade County.

Section 6. A) Multipurpose Maintenance – The County Manager is authorized and directed to cause to be made the maintenance and operation of various public improvements to be installed within the district in accordance with the provisions of this Ordinance. However, multipurpose maintenance services will be provided by the taxing district in accordance with the provisions of this ordinance only if a Homeowners Association and, if applicable, a community development district, have failed to provide these maintenance services and the County has adopted this district's multipurpose maintenance assessment roll.

B) Street Lighting Service – The County Manager is authorized and directed to cause the installation of the required street lights to be accomplished within the district in accordance with the provisions of said agreement and with the terms of this Ordinance.

Section 7. The County Manager is further directed to cause to be prepared and filed with the Clerk of the County Commission two (2) Preliminary Assessment Rolls in accordance with the provisions of Section 18-14 of the Code of Miami-Dade County, Florida. As authorized by Section 197.363, Florida Statutes, all special assessments levied and imposed under the provisions of this Ordinance shall be collected, subject to the provisions of Chapter 197, Florida

Statutes, in the same manner and at the same time as ad valorem taxes. In accordance with utilization of the ad valorem tax collection method, if such special assessments are not paid, when due, the potential for loss of title to the property exists. Furthermore, it is hereby declared that said improvements and/or services will be a special benefit to all property within the proposed special taxing district and the total amount of special assessments to be levied as aforesaid will not be in excess of such special benefit.

Section 8. A duly certified copy of this Ordinance shall be filed in the Office of the Clerk of the Circuit Court of Miami-Dade County, Florida, and recorded in the appropriate book of records.

Section 9. The provisions of this Ordinance shall become effective ten (10) days after the date of its enactment, unless vetoed by the Mayor, and if vetoed, shall become effective only upon an override by this Board.

PASSED AND ADOPTED:

Approved by County Attorney as
to form and legal sufficiency. APW for RAC

Prepared by:

James K. Kracht

REPORT AND RECOMMENDATIONS ON THE CREATION OF DOWNTOWN DORAL MULTIPURPOSE MAINTENANCE AND STREET LIGHTING SPECIAL TAXING DISTRICT MIAMI-DADE COUNTY, FLORIDA

Pursuant to Chapter 18 of the Code, and as a result of a detailed investigation of a duly petitioned for special taxing district, the following facts are submitted by the Public Works Department Director concerning the creation of Downtown Doral Multipurpose Maintenance and Street Lighting Special Taxing District.

1. BOUNDARIES OF THIS DISTRICT

The proposed District is located entirely within the municipal limits of the City of Doral, Florida. Pursuant to Chapter 18 of the Code, Miami-Dade County has received approval from the City of Doral to create this special district per Resolution No. 03-40, a copy of which is attached, and the boundaries, as set forth in the petition, are as follows:

> A portion of Section 22, Township 53 South, Range 40 East, Miami-Dade County, Florida; being more particularly described as follows:
>
> All of the S ½ of the NW ¼, the N ½ of the NW ¼ of the SW ¼, and the N ½ of the SW ¼ of the NE ¼, all of said Section 22;
>
> Less and excepting the following parcels:
>
> The platted lands, including tracts and roadways within the limits of "The Koger Center" as recorded in Plat Book 132, Page 73 of the Public Records of Miami-Dade County, Florida;
>
> The 40.00 foot platted right-of-way for NW 87th Avenue, the 35.00 foot platted right-of-way for NW 54th Street,
>
> That portion of the platted right-of-way lying northwesterly of the 25.00 foot radius arc and south of the south right-of-way line of NW 54th Street and east of the east right-of-way line of NW 79th Avenue,
>
> The 35.00 foot platted right-of-way for NW 79th Avenue,
>
> That portion of the platted right-of-way lying northeasterly of the 25.00 foot radius arc and south of the south right-of-way line of NW 54th Street and west of the west right-of-way line of NW 79th Avenue,
>
> and less also:
>
> The east 29.50 feet of the north 40.00 feet of Tract 34 and the west 50.50 feet of the north 40.00 feet of Tract 35, "Koger Executive Center", according to the plat thereof as recorded in Plat Book 91, Page 38 of the Public Records of Miami-Dade County, Florida (a.k.a. Downtown Doral).

The boundaries are shown on the attached plan entitled Downtown Doral Multipurpose Maintenance and Street Lighting Special Taxing District and hereinafter referred to as Exhibit A.

2. LOCATION AND DESCRIPTION OF THE SERVICES AND IMPROVEMENTS TO BE PROVIDED

The services and improvements to be provided by this District will initially consist of the maintenance and operation of the following:

A) Multipurpose Maintenance Services - The maintenance of medians and swale areas adjacent to public rights-of-way within the District boundaries should any Homeowners Association or the Downtown Doral Community Development District (CDD) fail to provide these services. Failure to provide maintenance within the private road area is defined in a non-exclusive easement granted to Miami-Dade County and recorded in the Public Records. Service will commence following failure of any Homeowners Association or the CDD to provide these services, and upon adoption of this District's multipurpose maintenance assessment roll. Other maintenance services may be provided in the future as specified in the District's ordinance and amendments thereto.

B) Street Lighting Service - The street lighting to be provided and maintained by the District will consist of metal halide post-top streetlights mounted on Washington style concrete poles. The spacing of the streetlights will be approximately 65-75 feet apart. The streetlights will be located within the public street right-of-way in accordance with the applicable standard details of the Public Works Department Manual.

3. ESTIMATE OF THE ANNUAL EXPENSE FOR MAINTENANCE, REPAIR AND OPERATION OF THIS DISTRICT

A) Multipurpose Maintenance Services	**First Year**	**Second Year**
Initial Annual Maintenance		$133,500
Parks Administration	No Services	26,700
Billing, Collecting and Processing Costs		150*
Contingencies		24,055*
Total Annual Maintenance Services Cost		$184,405*

B) Street Lighting Service	**First Year**	**Second Year**
156 - 175 Watt Metal Halide Luminaries	$20,330	$20,330
156 - Concrete Poles	11,645	11,645
15,600 Ft. - Underground Wiring	4,220	4,220

B) Street Lighting Service (Continued)	**First Year**	**Second Year**
Annual Fuel Adjustments (Based on 112,320 KWH at $0.07292 Per KWH)	$8,190	$8,190
Franchise Cost (Based on 5.91 % of $44,385)	2,620	2,620
SUB-TOTAL STREET LIGHTING SERVICES COSTS	$47,005	$47,005
ENGINEERING & ADMINISTRATIVE COSTS	6,135	935*
BILLING, COLLECTING & PROCESSING COSTS	2,610	1,045*
CONTINGENCIES	2,790	2,450*
TOTAL FIRST YEAR ANNUAL STREET LIGHTING COST	$58,540	
TOTAL SECOND YEAR ANNUAL STREET LIGHTING COST		$51,435*

*To be adjusted from actual experience.

4. PROCEDURE

A) Multipurpose Maintenance Services - Upon assumption of maintenance services by the District as described in Item 2(A) above, the costs of which are estimated in Item 3(A) above, any increase in future multipurpose maintenance facilities or functions within the scope of the District may be provided upon recommendation by a majority of the property owners for consideration by Miami-Dade County as administrator, provided that any expansion of the scope of services of the District may require adoption of an amending ordinance. The deletion of services is subject to maintaining a minimum level of services as determined by the Miami-Dade County Public Works Department. The expense of the multipurpose maintenance program will be continuous. However, because cost and/or level of maintenance may increase, the estimated annual expense, as indicated herein, can only be based on the initial maintenance program. The cost of the multipurpose maintenance program will therefore require adjustment annually through the budget process performed by the Park and Recreation Department or the Public Works Department as administrator of the District. This initial cost estimate has been developed by the Public Works Department based on estimates previously provided by the Park and Recreation Department for similar maintenance taxing districts.

Prior to assumption of maintenance services by Miami-Dade County, all areas and facilities to be maintained by the District must be inspected and accepted by Miami-Dade County, and all instruments that convey title to, or provide ingress/egress over, any real property to be maintained by Miami-Dade County shall be submitted to the Special Taxing Districts Division of the Miami-Dade County Public Works Department. Maintenance of any lake, natural preservation area, archeological site and mitigation area within the District boundary to be maintained by the District will commence upon notice from the Department of Environmental Resources Management (DERM) that the developer has complied with any and all maintenance requirements imposed by DERM.

However, implementation of maintenance services may begin no later than October 1st, the beginning of the County's fiscal year, provided sufficient time to initiate the process of assessment and notice of collection to all property owners within the District and that any applicable access provisions expressed in the preceding paragraph are met.

Once District services begin, if there is a proposed significant change to the level of service to be provided, the Park and Recreation Department will conduct a meeting in the community, inviting all directly affected property owners for the purpose of reviewing the District's budget and level of services. This will enable Miami-Dade County, as administrator, to secure input from affected community representatives, association and property owners to improve delivery and lower costs of the services provided within the scope of the District's authorized functions as specified in Item 2 above, and to determine the following:

1. Level of service;
2. Areas to be maintained;
3. Approximate effect on cost and rate of assessment for any changes.

Miami-Dade County shall determine the minimum service level. Maintenance services may not be entirely eliminated unless the District is abolished.

B) Street Lighting Services – Upon completion of the Downtown Doral development and donation of the street lighting system to the Florida Power and Light Company, they will maintain and operate the lights, poles and service lines at their expense, with annual service/rental costs to be borne by District property

owners. The Florida Power and Light Company will be responsible for the maintenance of the light standards, fixtures, lamps, and all connecting service lines. The cost of streetlights in this District will be continual and is based on a preliminary estimate prepared by the Florida Power and Light Company and approved by the Florida Public Service Commission. The District will pay the Florida Power and Light Company a monthly rental fee on each installation.

Miami-Dade County may enter into an agreement with the Florida Power and Light Company, form attached, wherein Miami-Dade County will pay to the Florida Power and Light Company monthly payments for the annual cost of providing the streetlight service.

5. CONFORMITY TO THE MASTER PLAN OF MIAMI-DADE COUNTY

The proposed District conforms to and in no way conflicts with the Comprehensive Development Master Plan of Miami-Dade County (see attached memorandum from the Department of Planning and Zoning).

6. RECOMMENDATION CONCERNING THE DESIRABILITY OF THIS DISTRICT

The need for multipurpose maintenance programs and street lighting in Miami-Dade County is apparent. Residents and property owners of Miami-Dade County continue to demonstrate their desire for the services which will be provided by this District through numerous petitions and personal requests.

In my opinion, the proposed multipurpose maintenance and streetlight program will provide special benefits to property within the District exceeding the amount of special assessments to be levied.

7. ESTIMATE OF ASSESSMENT AGAINST BENEFITED PROPERTY

A) Multipurpose Maintenance Services – This District will be held dormant until such time as stated above. Shown below is an estimate of costs if services were to commence in 2009. These costs are included for report purposes only; actual costs to provide services will be determined and presented to the Board of County Commissioners (BCC) at the assessment roll hearing. The combined cost of the multipurpose maintenance program, processing and administrative expenses as shown in Item 3(A) above is to be paid for by special assessments levied against all benefited properties following District implementation and is to be

apportioned to individual properties within the District on the basis of lot or parcel square footage. The cost per assessable square foot to be assessed for this service is estimated as follows:

Estimated Annual Assessments	**First Year**	**Second Year**
Estimated Total Multipurpose Maintenance Cost:	No Services	$184,405
Estimated Total Assessable Property Square Footage:		3,342,364
Estimated Cost Per Square Foot of Real Property:		$0.0552
Sample Assessments	**First Year**	**Second Year**
For A 94,220 Sq. Ft. Tract:	No Services	$5,201
For A 120,328 Sq. Ft. Tract:		$6,642
For A 143,249 Sq. Ft. Tract:		$7,907

B) Street Lighting Services – As was determined in Item 3(B) above, each property owner along the lighted roadway will pay the County, through a special assessment, a proportionate share of the total annual cost the second year and each succeeding year based on front footage. The cost per assessable front foot to be assessed for this service is estimated as follows:

Estimated Annual Assessments	**First Year**	**Second Year**
Estimated Total Street Lighting Cost:	$58,540	$51,435
Estimated Total Assessable Front Footage:	15,610	15,610
Estimated Cost Per Front Foot of Real Property:	$3.750	$3.295
Sample Assessments	**First Year**	**Second Year**
For A 94,220 Sq. Ft. Tract:	$971	$853
For A 120,328 Sq. Ft. Tract:	$3,266	$2,870
For A 143,249 Sq. Ft. Tract:	$2,044	$1,796

C) Estimated Combined Annual Assessments – The annual assessments shown below are representative of costs for property within this District and will be adjusted from actual experience based on costs of services provided at the time of District implementation.

Sample Assessments	**First Year**	**Second Year**
For A 94,220 Sq. Ft. Tract:	$971	$6,054
For A 120,328 Sq. Ft. Tract:	$3,266	$9,512
For A 143,249 Sq. Ft. Tract:	$2,044	$9,703

8. RECOMMENDATION

I recommend that Downtown Doral Multipurpose Maintenance and Street Lighting Special Taxing District be created pursuant to Section 18-22.1 of the Code, as 100% of the property owners have signed the petition and no referendum is required. I also recommend that the County Attorney cause to be prepared an ordinance authorizing the creation of Downtown Doral Multipurpose Maintenance and Street Lighting Special Taxing District. Pursuant to Section 18.22.1 of the Code, the BCC shall receive and hear, at a public hearing, remarks by interested persons on this District, and thereafter adopt such ordinance. Upon adoption of the District's creation ordinance, the street lighting assessment roll will be submitted on the same agenda as a separate agenda item for BCC consideration and approval. Following failure of any homeowners association or the CDD to provide multipurpose maintenance services, the BCC shall adopt the District's multipurpose maintenance assessment roll to fund these services at Public Hearing. Adoption of these resolutions will enable the Miami-Dade County Tax Collector to collect the funds necessary to reimburse affected County agencies involved in the creation and establishment of this District as well as operate and maintain this District. In the event actual costs are lower than the costs estimated, the Director of the Public Works Department or her designee shall adjust and decrease the rate of assessment. In the event actual second year costs are higher than the costs estimated; the County Manager may cause to be prepared revised preliminary assessment roll(s) and file the same with the Clerk of the Board for a scheduled public hearing to adopt the revised assessment roll(s). The ordinance creating the District shall take effect ten (10) days after the date of its adoption unless vetoed by the Mayor, and if vetoed, it shall become effective only upon an override by the BCC. My office will also be available to answer any questions from the public or your office in regard to the financial and/or engineering facts of this project. We further recommend that the County Manager forward this attached report to the BCC after he has reviewed it and concurred with our findings.

Attachments:
(1) Copy of Petition and Attachments
(2) Copy of Resolution from City of Doral
(3) Copy of FP&L Street Lighting Agreement Form
(4) Copy of Memo from Department of Planning and Zoning
(5) District Boundary Map (Exhibit A)

Memorandum

MIAMI-DADE COUNTY

Date: February 24, 2009

To: Kay M. Sullivan
Office of the Clerk of the Board
Attn: Felicia Hurst

From: Donald L. Tock, Jr., Chief
Special Taxing Districts Division

Subject: Downtown Doral Multipurpose Maintenance and Street Lighting Special Taxing District (Revised)

In reference to the subject petition, we hereby certify that, in compliance with Section 18-22.1 of the Miami-Dade County Code, this Department has verified the attached names against the records of the Property Appraisal Department, and has concluded that said petition relates to real property in a new subdivision and the signators are owners and/or individuals signing in their official capacity as representatives of the owners of the property in question. We are therefore submitting the following information:

1.	Total number of parcels of land within district boundaries	30
2.	Total number of owners of property within district boundaries	2
3.	Total number of resident owners within district boundaries (this is a new subdivision area)	0
4.	Total number of signatures on the petition	2
5.	Total number of owners or representatives signing the petition in an official capacity	2
6.	Percentage of owners or representatives signing the petition in their official capacity	100%

Pursuant to Section 18-22.1 of the Code, this is a valid petition.

By copy of this memorandum, I am forwarding this petition for review by the County Attorney for legal sufficiency.

Attachment

cc: James Kracht

MIAMI-DADE COUNTY ATTORNEY'S OFFICE
MEMORANDUM

TO: Don Tock
Chief, Special Taxing

FROM: James K. Kracht
Assistant County Attorney

DATE: February 27, 2009

RE: Downtown Doral Multipurpose Maintenance and Street Lighting Special Taxing District

---

Please be advised that I have reviewed the above referenced petition and find it to be legally sufficient, under Section 18-22.1.

JKK/cg

MIAMI-DADE COUNTY

PUBLIC WORKS DEPARTMENT
SPECIAL TAXING DISTRICTS DIVISION

, 2008
Document Preparation Date

Departmental Acceptance Date
(Government Use Only)

PETITION FOR MULTIPURPOSE SPECIAL TAXING DISTRICT

To the Board of County Commissioners of Miami-Dade County, Florida:

We, the undersigned property owners, do hereby petition Miami-Dade County, Florida, for the creation of the Special Taxing District(s) required by the community development district under the Code of Miami-Dade County, Florida, for any or all of the following: landscaping in the public roads installed by the CDD and entrance features (requested landscaping and entrance feature maintenance services shall be more fully described on the attached Exhibit B). The petitioned for district lies within that portion of the City of Doral more fully described on the attached Exhibit A.

Name(s) Downtown Doral CDD

It is understood and agreed that the boundaries of this district and the type and level of services to be provided by this district will be reviewed by the appropriate County authorities. It is also understood that the street lights and other improvements to be provided shall be in accordance with minimum standards and requirements set forth by the Miami-Dade County Public Works Department.

OWNER'S NAME	OWNER'S ADDRESS	LEGAL DESCRIPTION OF PROPERTY	TAX FOLIO NUMBER
Koala Miami Realty Holding Company, Inc.	8350 NW 52 Terr., #102, Doral, FL 33166-7706	Koala Miami Realty Holding Co., Inc. property – more fully described on Exhibit "A1"	See attached Exhibit "C"
By:			
Joseph B. Dobronyi, Jr. Vice President			
7950 Professional Center Phase LLC	2855 LeJeune Road, 4th Floor Coral Gables, FL 33134	7950 Professional Center Phase LLC property – more fully described on Exhibit "A2"	See attached Exhibit "C"
By:			
Christian M. Cobb Vice President			
		Overall property is more fully described on attached Exhibit "A"	

PLACE NOTARY STATEMENT AND STAMP HERE:

The foregoing instrument was acknowledged before me this 15 day of ~~April, 2008~~ July, by **Joseph B. Dobronyi**, Jr. Vice President of Koala Miami Realty Holding Co., Inc., a Delaware corporation, who is personally known to me or has produced _____ as identification.

ESTHER MARY KRIVDA
NOTARY PUBLIC, STATE OF NEW YORK
NO. 01KR6051251
QUALIFIED IN BRONX COUNTY
MY COMMISSION EXPIRES NOV. 20, 2010

Notary Public - State of ~~Florida~~ New York

The foregoing instrument was acknowledged before me this 21st day of ~~April~~ July, 2008, by **Christian M. Cobb**, Vice President of 7950 Professional Center Phase LLC, a Delaware limited liability company, who is personally known to me or has produced _____ as identification.

CHANTALE BAYARD
MY COMMISSION #DD649896
EXPIRES: MAR 12, 2011
~~Bonded by 1st State Insurance~~

Notary Public - State of Florida

EXHIBIT "A"

EXHIBIT "A" TO THE PETITION FOR THE CREATION OF A SPECIAL TAXING DISTRICT DATED APRIL 17, 2008 PER DOWNTOWN DORAL COMMUNITY DEVELOPMENT DISTRICT

LEGAL DESCRIPTION

Tract 2, less the West 0.37 feet thereof, Tract 34 less the East 29.50 feet of the North 40 feet thereof, Tract 35 less the West 50.50 feet of the North 40 feet thereof, and all of Tracts 3, 4, 5, 6, 7, 8, 9, 10, 11, 12, 13, 14, 15, 16, 17, 18, 19, 20, 33, 36, 37, 38 and 39, of KOGER EXECUTIVE CENTER, according to the Plat thereof, as recorded in Plat Book 91, Page 38, of the Public Records of Miami-Dade County, Florida.

TOGETHER WITH:

All of Tracts C, D and E, of KOGER CENTER PARK, according to the Plat thereof, as recorded in Plat Book 106, Page 15, of the Public Records of Miami-Dade County, Florida, together with a portion of Tract A, of KOGER CENTER PARK, according to the Plat thereof, as recorded in Plat Book 106, Page 15, of the Public Records of Miami-Dade County, Florida, more particularly described as follows:

Beginning at the southwest corner of Tract A, KOGER CENTER PARK, recorded in Plat Book 106, at Page 15, of the Public Records of Miami-Dade County, Florida, same being the southwest corner of the southeast 1/4 of the northwest 1/4 of Section 22, Township 53 South, Range 40 East; thence north 0°01'26" west along the west line of said Tract A, a distance of 421.18 feet to a point on the southeasterly right-of-way line of N.W. 53rd Street (80' R/W); thence along the southeasterly right-of-way line of N.W. 53rd Street along a circular curve to the left having a radius of 676.62 feet, a central angle of 2°42'57" an arc distance of 32.07 feet to a point; thence south 39°42'19", east a distance of 61.75 feet to a point; thence south 1°22'10" west a distance of 395.00 feet to a point on the south line of said tract A; thence north 88°37'50" west along the south line of said tract A a distance of 55.00 feet to the point of beginning.

TOGETHER WITH:

All of Tracts A, C and D, of THE KOGER CENTER, according to the Plat thereof, as recorded in Plat Book 132, at Page 73, of the Public Records of Miami-Dade County, Florida.

Said Lands also described as follows:

(See Schedule "A" Lands Parcels 3.1, 3.2, 3.3, 3.4, 3.5, 3.6, 3.7, 3.8, 3.9, 3.10, 3.11, 3.12, 3.13, 3.14, 3.15, 3.16, 3.17, 3.18, 3.19, 3.22, 3.23, 3.24, 3.25, 3.26, 3.27 and 3.28 attached hereto.)

TOGETHER WITH:

PARENT TRACT-DUTCHER : Tract 1, and the West 0.37 feet, of Tract 2, "THE KOGER EXECUTIVE CENTER", as recorded in Plat Book 91, Page 38, of the Public Records of Dade County, Florida.

CUT-OUT PARCEL 1: The East 200.00 feet of Tract 1, The West 0.37 feet of Tract 2. "KOGER EXECUTIVE CENTER", as recorded in Plat Book 91, Page 38, of the Public Records of Dade County, Florida.

CUT-OUT PARCEL 2: Tract 1 and The West 0.37 feet of Tract 2, "KOGER EXECUTIVE CENTER", as recorded in Plat Book 91, Page 38, of the Public Records of Dade County, Florida, less the East 200.00 feet thereof.

PARCEL 3.1 - AUGUSTA

Tract 18, less the easterly 127.72 feet, of KOGER EXECUTIVE CENTER, according to the Plat thereof, recorded in Plat Book 91, Page 38, of the Public Records of Miami-Dade County, Florida, and being more particularly described as follows:

Commence at the northwest corner of the South 1/2 of the Northwest 1/4 of Section 22, Township 53 South, Range 40 East, Miami-Dade County, Florida, said point being the intersection of the centerlines of N.W. 87th Avenue and N.W. 54th Street, all as shown on said plat; thence along the northerly line of the South 1/2 of the Northwest 1/4 of Section 22 and the centerline of N.W. 54th Street South 88°35'49" East 66.46 feet to a point; thence South 01°24'11" West 35.00 feet to the POINT OF BEGINNING, on the southerly right-of-way line of N.W. 54th Street; thence along the southerly right-of-way line of N.W. 54th Street South 88°35'49" East 323.26 feet to a point; thence along a line parallel with and 127.72 feet west of, when measured at right angles, to the easterly line of Tract 18, South 01°22'10" West 306.37 feet to a point on the northerly right-of-way line of N.W. 53rd Terrace; thence along the northerly right-of-way line of N.W. 53rd Terrace the following two (2) courses and distances: 1) North 88°37'50" West 317.28 feet and 2) with a curve to the right having a radius of 25.00 feet, a central angle of 88°39'43" and a chord bearing North 44°17'58" West 34.94 feet, an arc distance of 38.69 feet to a point on the easterly right-of-way line of N.W. 87th Avenue; thence along the easterly right-of-way line of N.W. 87th Avenue North 00°01'53" East 256.63 feet to a point on the southerly right-of-way line of N.W. 54th Street; thence along the southerly right-of-way line of N.W. 54th Street with a curve to the right having a radius of 25.00 feet, a central angle of 91°22'18" and a chord bearing North 45°43'02" East 35.78 feet, an arc distance of 39.87 feet to the Point of Beginning.

PARCEL 3.2 - CHARLESTON

Tract 14, less the south 33.79 feet; the west 94.34 feet of the north 175.00 feet of Tract 15 and the north 71.21 feet of the south 105.00 feet of the west 62.34 feet of Tract 15, of KOGER EXECUTIVE CENTER, according to the plat thereof, as recorded in Plat Book 91, Page 38, of the Public

Records of Miami-Dade County, Florida and being more particularly described as follows:

BEGINNING at the northwest corner of Tract 15, said point being on the southerly right-of-way line of N.W. 53rd Terrace and also being the northeast corner of Tract 14, all as shown on said plat; thence along the southerly right-of-way line of N.W. 53rd Terrace South 88°37'50" East 94.34 feet to a point; thence South 01°22'10" West 175.00 feet to a point; thence North 88°37'50" West 32.00 feet to a point; thence South 01°22'10" West 71.21 feet to a point; thence North 88°37'50" West 407.84 feet to a point on the easterly right-of-way line of N.W. 87th Avenue; thence along the easterly right-of-way line of N.W. 87th Avenue North 00°01'53" East 220.69 feet to a point on the southerly right-of-way line of N.W. 53rd Terrace; thence along the southerly right-of-way line of N.W. 53rd Terrace the following two (2) courses and distances: 1) with a curve to the right having a radius of 25.00 feet, a central angle of 91°20'17" and a chord which bears North 45°42'01" East 35.77 feet, an arc distance of 39.85 feet, and 2) South 88°37'50" East 325.66 feet to the Point of Beginning.

PARCEL 3.3 - AUSTIN

All of Tract 10; and the West 116.87 feet of Tract 11; and the South 33.79 feet of Tract 14; and the South 33.79 feet of the West 116.87 feet of Tract 15, all according to KOGER EXECUTIVE CENTER, according to the plat thereof, as recorded in Plat Book 91, Page 38, of the Public Records of Miami-Dade County, Florida.

Being the same as that property described by metes and bound as:

Tract 10 and portions of Tracts 11, 14 and 15, KOGER EXECUTIVE CENTER, according to the Plat thereof, recorded in Plat Book 91, Page 38, of the Public Records of Miami-Dade County, Florida, and being more particularly described as: Beginning at the Southeast corner of said Tract 10, thence North 88°37'50" West 313.87 feet to the point of curvature of a circular curve to the right having a radius of 25 feet; thence Westerly and Northerly along the arc of said curve 38.69 feet through a central angle of 88°39'43" to the point of tangency of said curve; thence North 0°01'53" East 284.45 feet to a point; thence South 88°37'50" East 462.37 feet to a point; thence South 01°22'10" West 308.79 feet to a point; thence North 88°37'50" West 116.87 feet to the Point of Beginning.

PARCEL 3.4 - PALM COAST

Tracts 4 and 7, and the West 156.72 feet of Tracts 5 and 8; all according to the KOGER EXECUTIVE CENTER, according to Plat Book 91, at Page 38, of the Public Records of Miami-Dade County, Florida.

Being the same as that property described by metes and bounds as:

Tracts 4 and 7, and portion of Tracts 5 and 8, KOGER EXECUTIVE CENTER, Plat Book 91, Page 38, of the Public Records of Miami-Dade County, Florida; being more particularly described as; BEGINNING at the Southwest corner of said Tract 5, thence North 88°37'50" West 298.84 feet to the

point of curvature of a circular curve to the right having a radius of 25 feet; thence westerly and northerly along the arc of said curve an arc distance of 38.71 feet through a central angle of 88°42'22" to the point of tangency of said curve; thence North 0°04'32" East 274.09 feet to a point; thence North 0°01'53" East 248.57 feet to the point of curvature of a circular curve to the right having a radius of 25 feet; thence northerly and easterly along the arc of said curve an arc distance of 39.85 feet through a central angle of 91°20'17" to the point of tangency of said curve; thence South 88°31'50" East 467.55 feet to a point; thence South 1°22'10" West 572.54 feet to a point; thence North 88°37'50" West 156.72 feet to the Point of Beginning.

PARCEL 3.5 - SAVANNAH

The East 127.72 feet of Tract 18 and all of Tract 19, of KOGER EXECUTIVE CENTER, according to the plat thereof, as recorded in Plat Book 91, Page 38, of the Public Records of Miami-Dade County, Florida, being more particularly described as follows:

BEGINNING at the southeast corner of said Tract 19, said point being on the north right-of-way line of N.W. 53rd Terrace, all as shown on said plat; thence along the north right-of-way line of said N.W. 53rd Terrace, North 88°37'50" West 462.72 feet to a point; thence along a line parallel to and 127.72 feet west of the east line of said Tract 18, North 01°22'10" East 306.37 feet to a point on the south right-of-way line of N.W. 54th Street; thence along the south right-of-way line of said N.W. 54th Street, South 88°35'49" East 462.72 feet to the northeast corner of said Tract 19; thence along the east line of said Tract 19, South 01°22'10" West 306.10 feet to the Point of Beginning.

PARCEL 3.6 - MACON BUILDING

Portions of Tract 17, 20 and 33, KOGER EXECUTIVE CENTER, according to the plat thereof, as recorded in Plat Book 91, Page 38, of the Public Records of Miami-Dade County, Florida, more particularly described as follows:

BEGIN at the Southwest corner of said Tract 20; thence run South 88°37'50" East, along the South line of said Tract 20 and along the North right-of-way line of N.W. 53rd Terrace, for a distance of 128.46 feet to the point of curvature of a circular curve to the right having a radius of 95.00 feet, said point also being the Westerly most corner of said Tract 17; thence run Southeasterly, Southerly and Southwesterly along the arc of said curve to the right, and along the Southwesterly line of said Tract 17, and along the Northeasterly right-of-way line of N.W. 53rd Terrace and N.W. 84th Avenue, through a central angle of 90° for an arc distance of 149.23 feet to a point; thence run South 88°37'50" East, along a line radial to the last described curve for a distance of 35.00 feet to a point; thence run North 1°22'10" East for a distance of 95.00 feet to the point of intersection with the North line of said Tract 17; thence continue North 1°22'10" East for a distance of 53.00 feet to a point; thence run South 88°37'50" East, along a line parallel with and 53.00 feet North of as measured at right angles to the South line of said Tract 20, for a distance of 148.96 feet to a point; thence run South 1°22'10" West

for a distance of 53.00 feet to the point of intersection with the South line of said Tract 20, said point being 69.98 feet west of the Southeast corner of said Tract 20 as measured along the South line of said Tract 20; thence continue South 1°22'10" West for a distance of 9.00 feet to a point; thence run South 88°37'50" East, along a line parallel with and 9.00 feet South of as measured at right angles to the North line of said Tract 17, for a distance of 70.20 feet to the point of intersection with the East line of said Tract 17, said point being 9.00 feet South of the Northeast corner of said Tract 17 as measured along the East line of said Tract 17; thence run South 88°34'40" East, along a line parallel with and 314.82 feet South of as measured at right angles to the North line of said Tract 33, for a distance of 105.40 feet to a point; thence run North 1°21'30" East, along a line parallel with and 297.00 feet West of as measured at right angles to the East line of said Tract 33, for a distance of 314.82 feet to a point; thence run North 88°34'40" West, along the South right-of-way line of N.W. 54th Street and along the North line of said Tract 33, for a distance of 113.00 feet to the Northwest corner of said Tract 33; thence run North 88°35'49" West, along the South right-of-way line of N.W. 54th Street and along the North line of said Tract 20, for a distance of 469.97 feet to the Northwest corner of said Tract 20; thence run South 1°22'10" West, along the West line of said Tract 20, for a distance of 306.10 feet to the Point of Beginning.

PARCEL 3.7 - MONTEREY

The North 175.00 feet of the east 210.66 feet of Tract 15 and Tract 16, less the south 65.00 feet, of KOGER EXECUTIVE CENTER, according to the plat thereof, as recorded in Plat Book 91, Page 38, of the Public Records of Miami-Dade County, Florida, and being more particularly described as follows:

Commence at the southeast corner of Tract 16, said point being on the westerly right-of-way line of N.W. 84th Avenue (70' R/W), all as shown on said plat; thence North 01°22'10" East along said Westerly right-of-way line of N.W. 84th Avenue a distance of 65.00 feet to the POINT OF BEGINNING; thence North 88°37'50" West 510.66 feet to a point; thence North 01°22'10" East 175.00 feet to a point on the southerly right-of-way line of N.W. 53rd Terrace (70' R/W); thence along the southerly right-of-way line of N.W. 53rd Terrace and curving and becoming the westerly right-of-way line of N.W. 84th Avenue (70' R/W) the following three (3) courses and distances: 1) South 88°37'50" East 485.66 feet; 2) with a curve to the right having a radius of 25.00 feet, a central angle of 90°00'00" and a chord bearing South 43°37'00" East 35.36 feet an arc distance of 39.27 feet, and 3) South 01°22'10" West 150.00 feet to the Point of Beginning.

PARCEL 3.8 - ATHENS

Tract 11 less the West 116.87 feet thereof; Tract 12; Tract 15, less the following: the South 33.79 feet of the West 116.87 feet, the North 246.21 feet of the West 62.34 feet and the North 175.00 feet of the East 242.66 feet; and the South 65.00 feet of Tract 16, all according to KOGER EXECUTIVE CENTER, according to Plat Book 91, Page 38, of the Public Records of Miami-Dade County, Florida.

Being the same as that property described by metes and bounds as:

Tract 12 and portions of Tracts 11, 15 and 16, KOGER EXECUTIVE CENTER, Plat Book 91, Page 38, of the Public Records of Miami-Dade County, Florida; being more particularly described as: Beginning at the Southwest corner of said Tract 12, then go South 88°37'50" East 217.63 feet to the point of curvature of a circular curve to the left having a radius of 596.62 feet; then go easterly and northerly along the arc of said curve 59.98 feet through a central angle of 5°45'36" to the point of a compound circular curve to the left having a radius of 25 feet; thence go easterly and northerly along the arc of said curve 36.76 feet through a central angle of 84°14'24" to the point of tangency: then proceed thru the following courses:

North 1°22'10" East 352.11 feet;
North 88°37'50" West 542.66 feet;
South 1°22'10" West 71.21 feet;
South 88°37'50" East 54.53 feet;
South 1°22'10" West 308.79 feet;
South 88°37'50" East 188.13 feet to the Point of Beginning.

PARCEL 3.9 - PHOENIX

A portion of Tracts 5 and 8, of KOGER EXECUTIVE CENTER, according to the Plat thereof, as recorded in Plat Book 91, Page 38, of the Public Records of Miami-Dade County, Florida, more particularly described as follows:

BEGINNING at the northeast corner of Tract 5, said point being on the westerly right-of-way line of N.W. 84th Avenue, all as shown on said plat; thence along the westerly right-of-way line of N.W. 84th Avenue South 01°22'10" West 39.27 feet to a point; thence North 88°37'50" West 247.28 feet to a point; thence North 01°22'10" East 28.00 feet to a point; thence North 88°37'50" West 201.00 feet to a point that is 156.72 feet easterly of the westerly boundary of Tract 5; thence along a line that is 156.72 feet easterly of and parallel to the westerly boundary of Tracts 5 and 8 North 01°22'10" East 286.27 feet to a point on the southerly right-of-way line of N.W. 53rd Street; thence along the southerly right-of-way line of N.W. 53rd Street the following two (2) courses and distances: 1) South 88°37'50" East 365.91 feet, and 2) with a curve to the left having a radius of 676.62 feet, a central angle of 04°41'24" and a chord which bears North 89°01'28" East 55.37 feet, an arc distance of 55.39 feet to a point on the westerly right-of-way line of N.W. 84th Avenue; thence along the westerly right-of-way line of N.W. 84th Avenue the following two (2) courses and distances: 1) with a curve to the right having a radius of 25.00 feet, a central angle of 94°41'24" and a chord which bears South 45°58'32" East 36.77 feet, an arc distance of 41.32 feet, and 2) South 01°22'10" West 252.35 feet to the Point of Beginning.

PARCEL 3.10 - PORTLAND

The East 448.28 feet of the South 286.27 feet of Tract 5, of KOGER EXECUTIVE CENTER, according to the plat thereof, as recorded in Plat Book

91, Page 38, of the Public Records of Miami-Dade County, Florida, less the East 247.28 feet of the North 28.00 feet thereof, more particularly described as follows:

Commence at the Northeast corner of Tract 5, said point being on the westerly right of way line of N.W. 84th Avenue (70' R/W), all as shown on said plat; thence along the Westerly right of way line of N.W. 84th Avenue South 1°22'10" West 39.27 feet to the POINT OF BEGINNING; thence continue along the westerly right of way line of N.W. 84th Avenue South 1°22'10" West 233.27 feet to the point; thence continue along the westerly right of way line of N.W. 84th Avenue, curving and becoming the northerly right of way line of N.W. 52nd Street (70' R/W), with a curve to the right, having a radius of 25.00 feet and a central angle of 90°00'00", an arc distance of 39.27 feet to a point; thence along the northerly right of way line of N.W. 52nd Street North 88°37'50" West 423.28 feet to a point; thence North 1°22'10" East 286.27 feet to a point; thence South 88°37'50" East 201.00 feet to a point; thence South 1°22'10" West 28.00 feet to a point; thence South 88°37'50" East 247.28 feet to the Point of Beginning.

PARCEL 3.11 - RICHMOND

All of Tract 2, less the West 0.37' thereof and the West 6.04' of Tract 3, KOGER EXECUTIVE CENTER, of Section 22, Township 53 South, Range 40 East, according to the Plat thereof, recorded in Plat Book 91, at Page 38, of the Public Records of Miami-Dade County, Florida.

Being the same as that property described by metes and bounds as:

Portions of Tracts 2 and 3, KOGER EXECUTIVE CENTER, Plat Book 91, Page 38, of the Public Records of Miami-Dade County, Florida, being more particularly described as: BEGINNING at the Northeast corner of said Tract 2, then go South 88°37'50" East 6.04 feet to a point; thence South 01°22'10" West 294.54 feet to a point; thence North 88°30'43" West 415.67 feet to a point; thence North 01°22'10" East 293.68 feet to a point; thence South 88°37'50" East 409.63 feet to the Point of Beginning.

PARCEL 3.12 - FLINT

A portion of Tracts 13, 17 and 20, of KOGER EXECUTIVE CENTER, according to the Plat thereof, as recorded in Plat Book 91, Page 38, of the Public Records of Miami-Dade County, Florida, more particularly described as follows:

BEGINNING at the northwest corner of said Tract 13, said point being on the easterly right-of-way of N.W. 84th Avenue, as shown on said plat; thence along said right-of-way, North 01°22'10" East 174.92 feet to a point; thence South 88°37'50" East 35.00 feet to a point; thence North 01°22'10" East 148.00 feet to a point; thence South 88°37'50" East 148.96 feet to a point; thence South 01°22'10" West 574.17 feet to a point on the northerly right-of-way of N.W. 53rd Street; thence southwesterly along said right-of-way, with a curve to the right, having a radius of 596.62 feet and a central angle of 16°14'13", an arc distance of 169.08 feet to a point; thence along another curve to the right, having a radius of 25.00

feet and a central angle of 108°04'36", an arc distance of 47.16 feet to a point on the easterly right-of-way of N.W. 84th Avenue; thence along said right-of-way, North 01°22'10" East 301.87 feet to the Point of Beginning.

PARCEL 3.13 - ROCHESTER

Tract 9 and the North 15.00 feet of Tract 6, of KOGER EXECUTIVE CENTER, according to the plat thereof, as recorded in Plat Book 91, Page 38, of the Public Records of Miami-Dade County, Florida, and a portion of Tract "A" of KOGER CENTER PARK, according to the plat thereof, as recorded in Plat Book 106, Page 15, of the Public Records of Miami-Dade County, Florida, being more particularly described as follows:

BEGINNING at the Southwest corner of said Tract 9, said point being on the Easterly right-of-way of Northwest 84th Avenue and also being the Northwest corner of said Tract 6; thence North 01°22'10" East along said Easterly right-of-way and the west line of said Tract 9, 272.79 feet to a point; thence continue with said right-of-way with a curve to the right, having a radius of 25 feet, a central angle of 75°21'24", an arc distance of 32.88 feet to a point on the Southerly right-of-way of Northwest 53rd Street and the Northerly line of said Tract 9; thence with said right-of-way and the Northerly line of said Tracts 9 and "A" with a curve to the left, having a radius of 676.62 feet, a central angle of 26°25'53", an arc distance of 312.13 feet to a point; thence South 39°42'19" East 61.75 feet to a point; thence South 01°22'10" West 395.00 feet to a point on the Southerly line of said Tract "A"; thence North 88°37'50" West along the Southerly line of said Tract "A" 55.00 feet to a point, said point being the Southwest corner of said Tract "A", the Southeast corner of said Tract 9 and the Northeast corner of said Tract 6; thence with the Easterly line of said Tract 6 South 00°03'00" West 15.00 feet to a point; thence North 88°37'50" West along a line that is parallel with and 15.00 feet South of the North line of said Tract 6, 278.11 feet to a point on the Easterly right-of-way of Northwest 84th Avenue and the West line of said Tract 6; thence North 01°22'10" East along said right-of-way and the West line of said Tract 6, 15.00 feet to the Point of Beginning.

PARCEL 3.14 - COLUMBUS

The North 30.44 feet of the East 313.31 feet of Tract 3; Tract 6 less a portion thereof lying Southwest of the following described line: Begin at a point on the South line of said Tract 6 lying 313.31 feet West of the Southeast corner of said Tract 6, thence proceed North 28°47'10" West, 21.91 feet to a point on the Westerly boundary line of said Tract 6; less the North 15 feet of Tract 6, KOGER EXECUTIVE CENTER, according to the Plat thereof, as recorded in Plat Book 91, Page 38, of the Public Records of Miami-Dade County, Florida. Being the same as that property described by metes and bound as:

Portions of Tracts 3 and 6, KOGER EXECUTIVE CENTER, according to the plat thereof, as recorded in Plat Book 91, Page 38, of the Public Records of Miami-Dade County, Florida, being more particularly described as Beginning at a point on the East line of said Tract 3, 30.45 feet South of the Northeast corner of said Tract 3, then go North 88°37'50" West 313.31

feet; then go North 00°03'00" East, 30.45 feet; thence go North 28°47'10" West 21.91 feet to a point on the Southeasterly right-of-way line of the junction of N.W. 52nd Street and 84th Avenue, said point being on a circular curve concave to the Northwest and having a radius of 95 feet, then go easterly and northerly along the arc of said curve 88.19 feet through a central angle of 53°11'29" to the point of tangency of said curve, then go North 01°22'10" East 257.54 feet; then go South 88°37'50" East 278.12 feet; then go South 0°03'00" West 383.08 feet to the Point of Beginning.

PARCEL 3.15 - ALBANY

A portion of Tracts 3 and 6, KOGER EXECUTIVE CENTER Plat of Section 22, Township 53 South, Range 40 East, according to the Plat thereof, recorded in Plat Book 91, at Page 38, of the Public Records of Miami-Dade County, Florida, being more particularly described as follows:

Commencing at the Northwest corner of Tract 3, of the said plat of Koger Executive Center; thence run South 88°37'50" East along the North boundary line of said Tract 3 a distance of 6.04 feet to the point of beginning of the parcel of land hereinafter described; thence South 88°37'50" East along the North boundary line of said Tract 3, a distance of 13.96 feet to the point of curvature of a circular curve concave to the Northwest and having for its elements a radius of 95.00 feet and a central angle of 36°48'51"; thence run Northeasterly along the arc of said curve a distance of 61.04 feet to a point; the last two (2) described courses being coincident with the South and Easterly right-of-way line of N.W. 52nd Street, thence run South 28°47'10" East along a line that is 11.02 feet Northeast of and parallel to the Northeasterly boundary of said Tract 3 a distance of 21.91 feet to a point on the North boundary of said Tract 3; thence run South 00°03'00" West a distance of 30.45 feet to a point; thence run South 88°37'50" East along a line that is 30.44 feet South of and parallel to the North boundary line of said Tract 3 a distance of 313.31 feet to a point on the East boundary line of said Tract 3; thence run South 00°03'00" West along said east boundary line a distance of 265.00 feet to the southeast corner of said Tract 3; thence run North 88°30'43" West along the South boundary line of said Tract 3, a distance of 402.00 feet a point; thence run North 01°22'10" East along a line that is 6.04 feet East of and parallel to the West boundary line of said Tract 3 a distance of 294.54 feet to the Point of Beginning.

Also described as follows:

All of Tract 3, less the West 6.04 feet thereof; and Also less the North 30.44 feet of the East 313.31 feet of said Tract 3, Koger Executive Center, according to the Plat thereof, recorded in Plat Book 91, Page 38, of the Public Records of Miami-Dade County, Florida.

and

That portion of Tract 6, lying Southwest of the following described line: Begin at a point on the South line of said Tract 6, lying 313.31 feet West of the Southeast corner of Tract 6, thence run North 28°47'10" West and

21.91 feet to a point on the Westerly boundary line of said Tract 6.

PARCEL 3.16 - BILLINGS

Portions of Tracts 13, 17 and 33, "KOGER EXECUTIVE CENTER", according to the Plat thereof, as recorded in Plat Book 91 at Page 38, of the Public Records of Miami-Dade County, Florida;

All that Portion of said Tract 13 lying East of a line 183.96 feet East of and parallel with the West line of said Tract 13;

AND

All that Portion of said Tract 17 lying East of a line 183.96 feet East of and parallel with the West line of said Tract 17 and South of a line 9.00 feet South of and parallel with the North line of said Tract 17;

AND

All that portion of said Tract 33 lying South of a line 314.82 feet South of and parallel with the North line of said Tract 33 and West of a line 210.86 feet East of and parallel with the West line of said Tract 33.

All the foregoing being more particularly described as follows:

Portions of Tracts 13, 17 and 33, "KOGER EXECUTIVE CENTER", according to the Plat thereof, as recorded in Plat Book 91, at Page 38, of the Public Records of Miami-Dade County, Florida, being more particularly described as follows:

Commence at the Northwest corner of said Tract 13; thence run South 88°37'50" East, along the North line of said Tract 13; for a distance of 183.96 feet to a point; thence run South 01°22'10" West, along a line parallel with and 183.96 feet East of as measured at right angles to the West line of said Tract 13, for a distance of 251.25 feet to the POINT OF BEGINNING of the following described parcel of land, said point lying and being on the Northerly right-of-way line of N.W. 53rd Street (Executive Center Drive), and on the arc of a 596.62 foot radius curve concave to the Northwest, and having a radial bearing of South 32°56'40" East from the center point of said curve; thence run North 01°22'10" East, along a line parallel with and 183.96 feet East of as measured at right angles to the Easterly right-of-way line of N.W. 84th Avenue, for a distance of 512.17 feet to a point; thence run South 88°37'50" East, along a line parallel with and 9.00 feet South of as measured at right angles to the North line of said Tract 17, for a distance of 70.20 feet to a point on the West line of said Tract 33; thence run South 88°34'40" East, along a line parallel with and 314.82 feet South of as measured at right angles to the Southerly right-of-way line of N.W. 54th Street, for a distance of 210.93 feet to a point; thence run South 00°01'26" East, along a line parallel with and 210.86 feet Easterly of as measured at right angles to the West line of said Tract 33, for a distance of 228.52 feet to a point on the Northerly right-of-way line of N.W. 53rd Street (Executive Center Drive); thence run South 44°44'02" West, along the previously described right-of-way line for

a distance of 275.64 feet to the point of curvature of a circular curve to the right having a radius of 596.62 feet; thence run Southwesterly, along the arc of said curve to the right through a central angle of 12°19'18", for an arc distance of 128.31 feet and a chord bearing South 50°53'41" West 128.06 feet to the POINT OF BEGINNING.

PARCEL 3.17 - MANCHESTER

A portion of Tract 33, KOGER EXECUTIVE CENTER, according to the Plat thereof, as recorded in Plat Book 91, Page 38, of the Public Records of Miami-Dade County, Florida, and described as follows:

Commence at the Northwest corner of said Tract 33; thence proceed South 88°34'40" East, along the North line of said Tract 33 for 113 feet to the Point of Beginning of the parcel to be described herein; thence continue South 88°34'40" East along said North line 270.50 feet; thence proceed South 1°21'30" West 320 feet; thence proceed South 30°11'28" East 62.75 feet to a point on the Southerly line of said Tract 33, said line being a circular curve concave to the Northwest and having a radius of 676.62 feet; thence proceed Westerly and Southerly along said circular curve thru a central angle of 15°04'32" for an arc distance of 178.03 feet to the Point of Tangency of said curve; thence proceed South 44°44'02" West and tangent to the last described curve 79.38 feet; thence proceed North 0°01'26" West 228.53 feet; thence proceed North 88°34'40" West 105.52 feet; thence proceed North 1°21'30" East 314.82 feet to the Point of Beginning.

PARCEL 3.18 - SEATTLE

A portion of Tracts 33, 34 and 35, KOGER EXECUTIVE CENTER, according to a plat thereof, as recorded in Plat Book 91, Page 38, of the Public Records of Miami-Dade County, Florida and being described as:

Beginning at the Northwest corner of said Tract 34, thence proceed South 88°34'40" East along the North line of said Tract 34 205.50 feet; thence proceed South 01°21'30" West 40 feet; thence proceed South 88°34'40" East 35.50 feet; thence proceed South 01°21'30" West 243.78 feet to the South line of said Tract 35 and a circular curve concave to the Northwest; thence proceed along the Southerly line of said Tracts 33, 34 and 35 Westerly and Southerly along said circular curve, having a radius of 676.62 feet, thru a central angle of 21°23'17" for an arc distance of 252.58 feet; thence proceed North 30°11'28" West 62.75 feet; thence proceed North 01°21'30" East 320 feet to the North line of said Tract 33; thence proceed South 88°34'40" East along said North line 26.50 feet to the Point of Beginning.

PARCEL 3.19 - DAYTON

A portion of Tract 35, of KOGER EXECUTIVE CENTER, according to the plat thereof, as recorded in Plat Book 91, at Page 38, of the Public Records of Miami-Dade County, Florida, and being more particularly described as follows:

Commence at the southeast corner of said Tract 35, said point being on the northerly right-of-way line of N.W. 53rd Street (Executive Center Drive) (80' R/W), all as shown on said plat; thence along said right-of-way line North 88°38'30" West 34.88 feet to the POINT OF BEGINNING; thence continue along said right-of-way line the following two (2) courses and distances: 1) North 88°38'30" West 204.76 feet, and 2) with a curve to the left, having a radius of 676.62 feet, and a central angle of 10°09'39", an arc distance of 119.99 feet to a point; thence North 01°21'30" East 243.78 feet to a point; thence South 88°34'40" East 44.50 feet to a point; thence North 01°21'30" East 40.00 feet to a point on the southerly right-of-way line of N.W. 54th Street; thence along said right-of-way line South 88°34'40" East 279.62 feet to a point; thence South 01°21'30" West 272.81 feet to the Point of Beginning.

PARCEL 3.22 - CLEVELAND

The East 34.88 feet of Tract 35, all of Tract 36, and the West 15.00 feet of Tract 37, of KOGER EXECUTIVE CENTER, according to the Plat thereof, recorded in Plat Book 91, Page 38, of the Public Records of Miami-Dade County, Florida, and being more particularly described as follows:

Beginning at the northwest corner of Tract 37, said point being on southerly right-of-way line of N.W. 54th Street and also being the northeast corner of Tract 36, all as shown on said plat; thence along the southerly right-of-way line of N.W. 54th Street South 88°37'34" East 15.00 feet to a point; thence along a line that is parallel with and 15.00 feet East of the West line of Tract 37 South 01°21'30" West 272.41 feet to a point on the northerly right-of-way line of N.W. 53rd Street (80' R/W); thence along the northerly right-of-way line of N.W. 53rd Street North 88°38'30" West 362.50 feet to a point; thence along a line that is parallel with and 34.88 feet west of the easterly line of Tract 35 North 01°21'30" East 272.80 feet to a point on the southerly right-of-way line of N.W. 54th Street; thence along the southerly right-of-way line of N.W. 54th Street South 88°34'40" East 347.50 feet to the Point of Beginning.

PARCEL 3.23 - CONCORD

Tract C, less the east 20.02 feet, of KOGER CENTER PARK, according to the Plat thereof, recorded in Plat Book 106, Page 15, of the Public Records of Miami-Dade County, Florida, and being more particularly described as follows:

BEGINNING at the northwest corner of Tract C, said point being on the southerly right-of-way line of N.W. 53rd Street (80' R/W), all as shown on said plat; thence along the southerly right-of-way line of N.W. 53rd Street South 88°38'30" East 349.20 feet to a point that is 20.02 feet westerly of the northeast corner of Tract C; thence along a line that is parallel with and 20.02 feet west of, when measured at right angles, to the easterly boundary of Tract C South 01°21'30" West 272.32 feet to a point on the southerly boundary of Tract C; thence along the southerly boundary of Tract C North 88°39'27" West 342.72 feet to the southwest corner of Tract C; thence along the westerly boundary of Tract C North 00°00'17" West 272.49 feet to the Point of Beginning.

PARCEL 3.24 - COVINGTON

The east 20.02 feet of Tract C and Tract D, less the east 34.02 feet, of KOGER CENTER PARK, according to the plat thereof, as recorded in Plat Book 106, Page 15, of the Public Records of Miami-Dade County, Florida, being more particularly described as follows:

Commence at the northeast corner of Tract D, said point being on the southerly right-of-way of N.W. 53rd Street (Executive Center Drive) (80' R/W), all as shown on said plat; thence along southerly right-of-way line of N.W. 53rd Street North 88°38'30" West 34.02 feet to the POINT OF BEGINNING; thence along a line parallel to and 34.02 feet west of the easterly boundary of Tract D South 01°21'30" West 272.22 feet to a point on the southerly boundary of Tract D; thence along the southerly boundary of Tracts D and C North 88°39'27" West 371.00 feet to a point; thence along a line parallel to and 20.02 feet west of the westerly boundary of Tract D North 01°21'30" East 272.32 feet to a point on the southerly right-of-way line of N.W. 53rd Street; thence along southerly right-of-way line of N.W. 53rd Street 88°38'30" East 371.00 feet to the Point of Beginning.

PARCEL 3.25 - SPRINGFIELD

A portion of Tract 37, of KOGER EXECUTIVE CENTER, according to the Plat thereof, as recorded in Plat Book 91, Page 38, of the Public Records of Miami-Dade County, Florida, more particularly described as follows:

COMMENCE at the northwest corner of said Tract 37, as shown on said plat, said point being on the southerly right-of-way line of Northwest 54th Street; thence along said right-of-way line, South 88°37'34" East 15.00 feet to the POINT OF BEGINNING; thence continue along said right-of-way line, South 88°37'34" East 342.00 feet to a point 6.12 feet west of the northeast corner of said Tract 37; thence along a line parallel with and 6.12 feet west of, when measured at right angles to, the easterly line of said Tract 37, South 01°21'30" West 272.32 feet to a point on the northerly right-of-way line of Northwest 53rd Street; thence along said right-of-way line, North 88°38'30" West 342.00 feet a point 15.00 feet east of the southwest corner of said Tract 37; thence along a line parallel with and 15.00 feet east of, when measured at right angles to, the westerly line of said Tract 37, North 01°21'30" East 272.41 feet to the Point of Beginning.

PARCEL 3.26 - SCRANTON

Tract 38, and the easterly 6.12 feet of Tract 37, of KOGER EXECUTIVE CENTER, according to the Plat thereof, recorded in Plat Book 91, Page 38, of the Public Records of Miami-Dade County, Florida, more particularly described as follows:

BEGINNING at the northeast corner of said Tract 38, as shown on said plat, said point being on the southerly right-of-way of Northwest 54th Street; thence along the easterly line of said Tract 38, South 01°21'30" West

272.21 feet to the southeast corner of said Tract 38, said point being on the northerly right-of-way line of Northwest 53rd Street; thence along the northerly right-of-way line of said Northwest 53rd Street; North 88°38'30" West 391.12 feet to a point 6.12 feet west of the southwest corner of said Tract 38; thence along a line parallel with and 6.12 feet west of, when measured at right angles to, the westerly line of said Tract 38, North 01°21'30" East 272.32 feet to a point on the southerly right-of-way line of Northwest 54th Street; thence along the southerly right-of-way line of said Northwest 54th Street, South 88°37'34" East 391.12 feet to the Point of Beginning.

PARCEL 3.27 - PLAZA

Tract 39, KOGER EXECUTIVE CENTER, according to the plat thereof, as recorded in Plat Book 91, Page 38, of the Public Records of Miami-Dade County, Florida.

TOGETHER WITH a non-exclusive easement for ingress, egress and parking of motor vehicles, over, upon, and across a portion of Tract 38 of KOGER EXECUTIVE CENTER, according to plat thereof, as recorded in Plat Book 91, Page 38, of the Public Records of Miami-Dade County, Florida, more particularly described as follows:

BEGINNING, at the northeast corner of said Tract 38, as shown on said plat, said point being on the southerly right-of-way line of N.W. 54th Street; thence along the easterly line of said Tract 38, South 01°21'30" West 272.21 feet to the southeast corner of said Tract 38, said point being on the northerly right-of-way line of N.W. 53rd Street (Executive Center Drive); thence along the northerly right-of-way line of said N.W. 53rd Street, North 88°38'30" West 45.00 feet to a point; thence North 01°21'30" East 228.00 feet to a point; thence North 88°37'34" West 32.00 feet to a point; thence North 01°21'30" East 44.19 feet to a point on the southerly right-of-way line of N.W. 54th Street; thence along the southerly right-of-way line of said N.W. 54th Street, South 88°37'34" East 77.00 feet to the Point of Beginning.

PARCEL 3.28 - DENVER

The East 34.02 feet of Tract D and all of Tract E, of KOGER CENTER PARK, according to the Plat thereof, as recorded in Plat Book 106, page 15, of the Public Records of Miami-Dade County, Florida, being more particularly described as follows:

Beginning at the Southeast corner of Tract E, said point being on the Westerly right-of-way line of N.W. 79th Avenue (Variable R/W), all as shown on said plat; thence along the Southerly boundary of Tracts E and D North 88° 39' 27" West 574.02 feet to a point; thence along a line parallel to and 34.02 feet West of the Easterly boundary of Tract D North 01° 21' 30" East 272.22 feet to a point on the Southerly right-of-way line of N.W. 53rd Street (80° R/W); thence along the Southerly right-of-way line of N.W. 53rd Street the following two (2) courses and distances: 1) South 88° 38' 30" East 543.03 feet; and 2) with a curve to the right having a radius of 25.00 feet, a central angle of 88° 36' 47" and a chord

which bears South 44° 20' 06" East 34.92 feet, an arc distance of 38.66 feet to a point on the Westerly right-of-way line of N.W. 79th Avenue; thence along the Westerly right-of-way line of N.W. 79th Avenue South 00° 01' 43" East 247.74 feet to the Point of Beginning.

Which property is now described as follows:

Tract E, KOGER CENTER PARK, according to the Plat thereof, as recorded in Plat Book 106, page 15, of the Public Records of Miami-Dade County, Florida.

Together with:

The East 34.02 feet of Tract D, KOGER CENTER PARK, according to the Plat thereof, as recorded in Plat Book 106, page 15, of the Public Records of Miami-Dade County, Florida.

EXHIBIT "A1"

LEGAL DESCRIPTION OF PROPERTY OWNED BY KOALA MIAMI REALTY HOLDING CO., INC.

LEGAL DESCRIPTION (PROPERTY WITHOUT DENVER)

Tract 2, less the West 0.37 feet thereof, Tract 34 less the East 29.50 feet of the North 40 feet thereof, Tract 35 less the West 50.50 feet of the North 40 feet thereof, and all of Tracts 3, 4, 5, 6, 7, 8, 9, 10, 11, 12, 13, 14, 15, 16, 17, 18, 19, 20, 33, 36, 37, 38 and 39, of KOGER EXECUTIVE CENTER, according to the Plat thereof, as recorded in Plat Book 91, Page 38, of the Public Records of Miami-Dade County, Florida.

TOGETHER WITH:

All of Tracts C, D and E, of KOGER CENTER PARK, according to the Plat thereof, as recorded in Plat Book 106, Page 15, of the Public Records of Miami-Dade County, Florida, together with a portion of Tract A, of KOGER CENTER PARK, according to the Plat thereof, as recorded in Plat Book 106, Page 15, of the Public Records of Miami-Dade County, Florida, more particularly described as follows:

Beginning at the southwest corner of Tract A, KOGER CENTER PARK, recorded in Plat Book 106, at Page 15, of the Public Records of Miami-Dade County, Florida, same being the southwest corner of the southeast 1/4 of the northwest 1/4 of Section 22, Township 53 South, Range 40 East; thence north 0°01'26" west along the west line of said Tract A, a distance of 421.18 feet to a point on the southeasterly right-of-way line of N.W. 53rd Street (80' R/W); thence along the southeasterly right-of-way line of N.W. 53rd Street along a circular curve to the left having a radius of 676.62 feet, a central angle of 2°42'57" an arc distance of 32.07 feet to a point; thence south 39°42'19", east a distance of 61.75 feet to a point; thence south 1°22'10" west a distance of 395.00 feet to a point on the south line of said tract A; thence north 88°37'50" west along the south line of said tract A a distance of 55.00 feet to the point of beginning.

TOGETHER WITH:

All of Tracts A, C and D, of THE KOGER CENTER, according to the Plat thereof, as recorded in Plat Book 132, at Page 73, of the Public Records of Miami-Dade County, Florida.

Said Lands also described as follows:

(See Schedule "A" Lands Parcels 3.1, 3.2, 3.3, 3.4, 3.5, 3.6, 3.7, 3.8, 3.9, 3.10, 3.11, 3.12, 3.13, 3.14, 3.15, 3.16, 3.17, 3.18, 3.19, 3.22, 3.23, 3.24, 3.25, 3.26, 3.27 and 3.28 attached hereto.)

TOGETHER WITH:

PARENT TRACT-DUTCHER : Tract 1, and the West 0.37 feet, of Tract 2, "THE KOGER EXECUTIVE CENTER", as recorded in Plat Book 91, Page 38, of the Public Records of Dade County, Florida.

CUT-OUT PARCEL 1: The East 200.00 feet of Tract 1, The West 0.37 feet of Tract 2. "KOGER EXECUTIVE CENTER", as recorded in Plat Book 91, Page 38, of the Public Records of Dade County, Florida.

CUT-OUT PARCEL 2: Tract 1 and The West 0.37 feet of Tract 2, "KOGER EXECUTIVE CENTER", as recorded in Plat Book 91, Page 38, of the Public Records of Dade County, Florida, less the East 200.00 feet thereof.

PARCEL 3.1 - AUGUSTA

Tract 18, less the easterly 127.72 feet, of KOGER EXECUTIVE CENTER, according to the Plat thereof, recorded in Plat Book 91, Page 38, of the Public Records of Miami-Dade County, Florida, and being more particularly described as follows:

Commence at the northwest corner of the South 1/2 of the Northwest 1/4 of Section 22, Township 53 South, Range 40 East, Miami-Dade County, Florida, said point being the intersection of the centerlines of N.W. 87th Avenue and N.W. 54th Street, all as shown on said plat; thence along the northerly line of the South 1/2 of the Northwest 1/4 of Section 22 and the centerline of N.W. 54th Street South 88°35'49" East 66.46 feet to a point; thence South 01°24'11" West 35.00 feet to the POINT OF BEGINNING, on the southerly right-of-way line of N.W. 54th Street; thence along the southerly right-of-way line of N.W. 54th Street South 88°35'49" East 323.26 feet to a point; thence along a line parallel with and 127.72 feet west of, when measured at right angles, to the easterly line of Tract 18, South 01°22'10" West 306.37 feet to a point on the northerly right-of-way line of N.W. 53rd Terrace; thence along the northerly right-of-way line of N.W. 53rd Terrace the following two (2) courses and distances: 1) North 88°37'50" West 317.28 feet and 2) with a curve to the right having a radius of 25.00 feet, a central angle of 88°39'43" and a chord bearing North 44°17'58" West 34.94 feet, an arc distance of 38.69 feet to a point on the easterly right-of-way line of N.W. 87th Avenue; thence along the easterly right-of-way line of N.W. 87th Avenue North 00°01'53" East 256.63 feet to a point on the southerly right-of-way line of N.W. 54th Street; thence along the southerly right-of-way line of N.W. 54th Street with a curve to the right having a radius of 25.00 feet, a central angle of 91°22'18" and a chord bearing North 45°43'02" East 35.78 feet, an arc distance of 39.87 feet to the Point of Beginning.

PARCEL 3.2 - CHARLESTON

Tract 14, less the south 33.79 feet; the west 94.34 feet of the north 175.00 feet of Tract 15 and the north 71.21 feet of the south 105.00 feet of the west 62.34 feet of Tract 15, of KOGER EXECUTIVE CENTER, according to the plat thereof, as recorded in Plat Book 91, Page 38, of the Public Records of Miami-Dade County, Florida and being more particularly

described as follows:

BEGINNING at the northwest corner of Tract 15, said point being on the southerly right-of-way line of N.W. 53rd Terrace and also being the northeast corner of Tract 14, all as shown on said plat; thence along the southerly right-of-way line of N.W. 53rd Terrace South 88°37'50" East 94.34 feet to a point; thence South 01°22'10" West 175.00 feet to a point; thence North 88°37'50" West 32.00 feet to a point; thence South 01°22'10" West 71.21 feet to a point; thence North 88°37'50" West 407.84 feet to a point on the easterly right-of-way line of N.W. 87th Avenue; thence along the easterly right-of-way line of N.W. 87th Avenue North 00°01'53" East 220.69 feet to a point on the southerly right-of-way line of N.W. 53rd Terrace; thence along the southerly right-of-way line of N.W. 53rd Terrace the following two (2) courses and distances: 1) with a curve to the right having a radius of 25.00 feet, a central angle of 91°20'17" and a chord which bears North 45°42'01" East 35.77 feet, an arc distance of 39.85 feet, and 2) South 88°37'50" East 325.66 feet to the Point of Beginning.

PARCEL 3.3 - AUSTIN

All of Tract 10; and the West 116.87 feet of Tract 11; and the South 33.79 feet of Tract 14; and the South 33.79 feet of the West 116.87 feet of Tract 15, all according to KOGER EXECUTIVE CENTER, according to the plat thereof, as recorded in Plat Book 91, Page 38, of the Public Records of Miami-Dade County, Florida.

Being the same as that property described by metes and bound as:

Tract 10 and portions of Tracts 11, 14 and 15, KOGER EXECUTIVE CENTER, according to the Plat thereof, recorded in Plat Book 91, Page 38, of the Public Records of Miami-Dade County, Florida, and being more particularly described as: Beginning at the Southeast corner of said Tract 10, thence North 88°37'50" West 313.87 feet to the point of curvature of a circular curve to the right having a radius of 25 feet; thence Westerly and Northerly along the arc of said curve 38.69 feet through a central angle of 88°39'43" to the point of tangency of said curve; thence North 0°01'53" East 284.45 feet to a point; thence South 88°37'50" East 462.37 feet to a point; thence South 01°22'10" West 308.79 feet to a point; thence North 88°37'50" West 116.87 feet to the Point of Beginning.

PARCEL 3.4 - PALM COAST

Tracts 4 and 7, and the West 156.72 feet of Tracts 5 and 8; all according to the KOGER EXECUTIVE CENTER, according to Plat Book 91, at Page 38, of the Public Records of Miami-Dade County, Florida.

Being the same as that property described by metes and bounds as:

Tracts 4 and 7, and portion of Tracts 5 and 8, KOGER EXECUTIVE CENTER, Plat Book 91, Page 38, of the Public Records of Miami-Dade County, Florida; being more particularly described as; BEGINNING at the Southwest corner of said Tract 5, thence North 88°37'50" West 298.84 feet to the point of curvature of a circular curve to the right having a radius of 25

feet; thence westerly and northerly along the arc of said curve an arc distance of 38.71 feet through a central angle of 88°42'22" to the point of tangency of said curve; thence North 0°04'32" East 274.09 feet to a point; thence North 0°01'53" East 248.57 feet to the point of curvature of a circular curve to the right having a radius of 25 feet; thence northerly and easterly along the arc of said curve an arc distance of 39.85 feet through a central angle of 91°20'17" to the point of tangency of said curve; thence South 88°31'50" East 467.55 feet to a point; thence South 1°22'10" West 572.54 feet to a point; thence North 88°37'50" West 156.72 feet to the Point of Beginning.

PARCEL 3.5 - SAVANNAH

The East 127.72 feet of Tract 18 and all of Tract 19, of KOGER EXECUTIVE CENTER, according to the plat thereof, as recorded in Plat Book 91, Page 38, of the Public Records of Miami-Dade County, Florida, being more particularly described as follows:

BEGINNING at the southeast corner of said Tract 19, said point being on the north right-of-way line of N.W. 53rd Terrace, all as shown on said plat; thence along the north right-of-way line of said N.W. 53rd Terrace, North 88°37'50" West 462.72 feet to a point; thence along a line parallel to and 127.72 feet west of the east line of said Tract 18, North 01°22'10" East 306.37 feet to a point on the south right-of-way line of N.W. 54th Street; thence along the south right-of-way line of said N.W. 54th Street, South 88°35'49" East 462.72 feet to the northeast corner of said Tract 19; thence along the east line of said Tract 19, South 01°22'10" West 306.10 feet to the Point of Beginning.

PARCEL 3.6 - MACON BUILDING

Portions of Tract 17, 20 and 33, KOGER EXECUTIVE CENTER, according to the plat thereof, as recorded in Plat Book 91, Page 38, of the Public Records of Miami-Dade County, Florida, more particularly described as follows:

BEGIN at the Southwest corner of said Tract 20; thence run South 88°37'50" East, along the South line of said Tract 20 and along the North right-of-way line of N.W. 53rd Terrace, for a distance of 128.46 feet to the point of curvature of a circular curve to the right having a radius of 95.00 feet, said point also being the Westerly most corner of said Tract 17; thence run Southeasterly, Southerly and Southwesterly along the arc of said curve to the right, and along the Southwesterly line of said Tract 17, and along the Northeasterly right-of-way line of N.W. 53rd Terrace and N.W. 84th Avenue, through a central angle of 90° for an arc distance of 149.23 feet to a point; thence run South 88°37'50" East, along a line radial to the last described curve for a distance of 35.00 feet to a point; thence run North 1°22'10" East for a distance of 95.00 feet to the point of intersection with the North line of said Tract 17; thence continue North 1°22'10" East for a distance of 53.00 feet to a point; thence run South 88°37'50" East, along a line parallel with and 53.00 feet North of as measured at right angles to the South line of said Tract 20, for a distance of 148.96 feet to a point; thence run South 1°22'10" West for a distance of 53.00 feet to the point of intersection with the South

line of said Tract 20, said point being 69.98 feet west of the Southeast corner of said Tract 20 as measured along the South line of said Tract 20; thence continue South 1°22'10" West for a distance of 9.00 feet to a point; thence run South 88°37'50" East, along a line parallel with and 9.00 feet South of as measured at right angles to the North line of said Tract 17, for a distance of 70.20 feet to the point of intersection with the East line of said Tract 17, said point being 9.00 feet South of the Northeast corner of said Tract 17 as measured along the East line of said Tract 17; thence run South 88°34'40" East, along a line parallel with and 314.82 feet South of as measured at right angles to the North line of said Tract 33, for a distance of 105.40 feet to a point; thence run North 1°21'30" East, along a line parallel with and 297.00 feet West of as measured at right angles to the East line of said Tract 33, for a distance of 314.82 feet to a point; thence run North 88°34'40" West, along the South right-of-way line of N.W. 54th Street and along the North line of said Tract 33, for a distance of 113.00 feet to the Northwest corner of said Tract 33; thence run North 88°35'49" West, along the South right-of-way line of N.W. 54th Street and along the North line of said Tract 20, for a distance of 469.97 feet to the Northwest corner of said Tract 20; thence run South 1°22'10" West, along the West line of said Tract 20, for a distance of 306.10 feet to the Point of Beginning.

PARCEL 3.7 - MONTEREY

The North 175.00 feet of the east 210.66 feet of Tract 15 and Tract 16, less the south 65.00 feet, of KOGER EXECUTIVE CENTER, according to the plat thereof, as recorded in Plat Book 91, Page 38, of the Public Records of Miami-Dade County, Florida, and being more particularly described as follows:

Commence at the southeast corner of Tract 16, said point being on the westerly right-of-way line of N.W. 84th Avenue (70' R/W), all as shown on said plat; thence North 01°22'10" East along said Westerly right-of-way line of N.W. 84th Avenue a distance of 65.00 feet to the POINT OF BEGINNING; thence North 88°37'50" West 510.66 feet to a point; thence North 01°22'10" East 175.00 feet to a point on the southerly right-of-way line of N.W. 53rd Terrace (70' R/W); thence along the southerly right-of-way line of N.W. 53rd Terrace and curving and becoming the westerly right-of-way line of N.W. 84th Avenue (70' R/W) the following three (3) courses and distances: 1) South 88°37'50" East 485.66 feet; 2) with a curve to the right having a radius of 25.00 feet, a central angle of 90°00'00" and a chord bearing South 43°37'00" East 35.36 feet an arc distance of 39.27 feet, and 3) South 01°22'10" West 150.00 feet to the Point of Beginning.

PARCEL 3.8 - ATHENS

Tract 11 less the West 116.87 feet thereof; Tract 12; Tract 15, less the following: the South 33.79 feet of the West 116.87 feet, the North 246.21 feet of the West 62.34 feet and the North 175.00 feet of the East 242.66 feet; and the South 65.00 feet of Tract 16, all according to KOGER EXECUTIVE CENTER, according to Plat Book 91, Page 38, of the Public Records of Miami-Dade County, Florida.

Being the same as that property described by metes and bounds as:

Tract 12 and portions of Tracts 11, 15 and 16, KOGER EXECUTIVE CENTER, Plat Book 91, Page 38, of the Public Records of Miami-Dade County, Florida; being more particularly described as: Beginning at the Southwest corner of said Tract 12, then go South 88°37'50" East 217.63 feet to the point of curvature of a circular curve to the left having a radius of 596.62 feet; then go easterly and northerly along the arc of said curve 59.98 feet through a central angle of 5°45'36" to the point of a compound circular curve to the left having a radius of 25 feet; thence go easterly and northerly along the arc of said curve 36.76 feet through a central angle of 84°14'24" to the point of tangency: then proceed thru the following courses:

North 1°22'10" East 352.11 feet;
North 88°37'50" West 542.66 feet;
South 1°22'10" West 71.21 feet;
South 88°37'50" East 54.53 feet;
South 1°22'10" West 308.79 feet;
South 88°37'50" East 188.13 feet to the Point of Beginning.

PARCEL 3.9 - PHOENIX

A portion of Tracts 5 and 8, of KOGER EXECUTIVE CENTER, according to the Plat thereof, as recorded in Plat Book 91, Page 38, of the Public Records of Miami-Dade County, Florida, more particularly described as follows:

BEGINNING at the northeast corner of Tract 5, said point being on the westerly right-of-way line of N.W. 84th Avenue, all as shown on said plat; thence along the westerly right-of-way line of N.W. 84th Avenue South 01°22'10" West 39.27 feet to a point; thence North 88°37'50" West 247.28 feet to a point; thence North 01°22'10" East 28.00 feet to a point; thence North 88°37'50" West 201.00 feet to a point that is 156.72 feet easterly of the westerly boundary of Tract 5; thence along a line that is 156.72 feet easterly of and parallel to the westerly boundary of Tracts 5 and 8 North 01°22'10" East 286.27 feet to a point on the southerly right-of-way line of N.W. 53rd Street; thence along the southerly right-of-way line of N.W. 53rd Street the following two (2) courses and distances: 1) South 88°37'50" East 365.91 feet, and 2) with a curve to the left having a radius of 676.62 feet, a central angle of 04°41'24" and a chord which bears North 89°01'28" East 55.37 feet, an arc distance of 55.39 feet to a point on the westerly right-of-way line of N.W. 84th Avenue; thence along the westerly right-of-way line of N.W. 84th Avenue the following two (2) courses and distances: 1) with a curve to the right having a radius of 25.00 feet, a central angle of 94°41'24" and a chord which bears South 45°58'32" East 36.77 feet, an arc distance of 41.32 feet, and 2) South 01°22'10" West 252.35 feet to the Point of Beginning.

PARCEL 3.10 - PORTLAND

The East 448.28 feet of the South 286.27 feet of Tract 5, of KOGER EXECUTIVE CENTER, according to the plat thereof, as recorded in Plat Book 91, Page 38, of the Public Records of Miami-Dade County, Florida, less the

East 247.28 feet of the North 28.00 feet thereof, more particularly described as follows:

Commence at the Northeast corner of Tract 5, said point being on the westerly right of way line of N.W. 84th Avenue (70' R/W), all as shown on said plat; thence along the Westerly right of way line of N.W. 84th Avenue South 1°22'10" West 39.27 feet to the POINT OF BEGINNING; thence continue along the westerly right of way line of N.W. 84th Avenue South 1°22'10" West 233.27 feet to the point; thence continue along the westerly right of way line of N.W. 84th Avenue, curving and becoming the northerly right of way line of N.W. 52nd Street (70' R/W), with a curve to the right, having a radius of 25.00 feet and a central angle of 90°00'00", an arc distance of 39.27 feet to a point; thence along the northerly right of way line of N.W. 52nd Street North 88°37'50" West 423.28 feet to a point; thence North 1°22'10" East 286.27 feet to a point; thence South 88°37'50" East 201.00 feet to a point; thence South 1°22'10" West 28.00 feet to a point; thence South 88°37'50" East 247.28 feet to the Point of Beginning.

PARCEL 3.11 - RICHMOND

All of Tract 2, less the West 0.37' thereof and the West 6.04' of Tract 3, KOGER EXECUTIVE CENTER, of Section 22, Township 53 South, Range 40 East, according to the Plat thereof, recorded in Plat Book 91, at Page 38, of the Public Records of Miami-Dade County, Florida.

Being the same as that property described by metes and bounds as:

Portions of Tracts 2 and 3, KOGER EXECUTIVE CENTER, Plat Book 91, Page 38, of the Public Records of Miami-Dade County, Florida, being more particularly described as: BEGINNING at the Northeast corner of said Tract 2, then go South 88°37'50" East 6.04 feet to a point; thence South 01°22'10" West 294.54 feet to a point; thence North 88°30'43" West 415.67 feet to a point; thence North 01°22'10" East 293.68 feet to a point; thence South 88°37'50" East 409.63 feet to the Point of Beginning.

PARCEL 3.12 - FLINT

A portion of Tracts 13, 17 and 20, of KOGER EXECUTIVE CENTER, according to the Plat thereof, as recorded in Plat Book 91, Page 38, of the Public Records of Miami-Dade County, Florida, more particularly described as follows:

BEGINNING at the northwest corner of said Tract 13, said point being on the easterly right-of-way of N.W. 84th Avenue, as shown on said plat; thence along said right-of-way, North 01°22'10" East 174.92 feet to a point; thence South 88°37'50" East 35.00 feet to a point; thence North 01°22'10" East 148.00 feet to a point; thence South 88°37'50" East 148.96 feet to a point; thence South 01°22'10" West 574.17 feet to a point on the northerly right-of-way of N.W. 53rd Street; thence southwesterly along said right-of-way, with a curve to the right, having a radius of 596.62 feet and a central angle of 16°14'13", an arc distance of 169.08 feet to a point; thence along another curve to the right, having a radius of 25.00 feet and a central angle of 108°04'36", an arc distance of 47.16 feet to a

point on the easterly right-of-way of N.W. 84th Avenue; thence along said right-of-way, North 01°22'10" East 301.87 feet to the Point of Beginning.

PARCEL 3.13 - ROCHESTER

Tract 9 and the North 15.00 feet of Tract 6, of KOGER EXECUTIVE CENTER, according to the plat thereof, as recorded in Plat Book 91, Page 38, of the Public Records of Miami-Dade County, Florida, and a portion of Tract "A" of KOGER CENTER PARK, according to the plat thereof, as recorded in Plat Book 106, Page 15, of the Public Records of Miami-Dade County, Florida, being more particularly described as follows:

BEGINNING at the Southwest corner of said Tract 9, said point being on the Easterly right-of-way of Northwest 84th Avenue and also being the Northwest corner of said Tract 6; thence North 01°22'10" East along said Easterly right-of-way and the west line of said Tract 9, 272.79 feet to a point; thence continue with said right-of-way with a curve to the right, having a radius of 25 feet, a central angle of 75°21'24", an arc distance of 32.88 feet to a point on the Southerly right-of-way of Northwest 53rd Street and the Northerly line of said Tract 9; thence with said right-of-way and the Northerly line of said Tracts 9 and "A" with a curve to the left, having a radius of 676.62 feet, a central angle of 26°25'53", an arc distance of 312.13 feet to a point; thence South 39°42'19" East 61.75 feet to a point; thence South 01°22'10" West 395.00 feet to a point on the Southerly line of said Tract "A"; thence North 88°37'50" West along the Southerly line of said Tract "A" 55.00 feet to a point, said point being the Southwest corner of said Tract "A", the Southeast corner of said Tract 9 and the Northeast corner of said Tract 6; thence with the Easterly line of said Tract 6 South 00°03'00" West 15.00 feet to a point; thence North 88°37'50" West along a line that is parallel with and 15.00 feet South of the North line of said Tract 6, 278.11 feet to a point on the Easterly right-of-way of Northwest 84th Avenue and the West line of said Tract 6; thence North 01°22'10" East along said right-of-way and the West line of said Tract 6, 15.00 feet to the Point of Beginning.

PARCEL 3.14 - COLUMBUS

The North 30.44 feet of the East 313.31 feet of Tract 3; Tract 6 less a portion thereof lying Southwest of the following described line: Begin at a point on the South line of said Tract 6 lying 313.31 feet West of the Southeast corner of said Tract 6, thence proceed North 28°47'10" West, 21.91 feet to a point on the Westerly boundary line of said Tract 6; less the North 15 feet of Tract 6, KOGER EXECUTIVE CENTER, according to the Plat thereof, as recorded in Plat Book 91, Page 38, of the Public Records of Miami-Dade County, Florida. Being the same as that property described by metes and bound as:

Portions of Tracts 3 and 6, KOGER EXECUTIVE CENTER, according to the plat thereof, as recorded in Plat Book 91, Page 38, of the Public Records of Miami-Dade County, Florida, being more particularly described as Beginning at a point on the East line of said Tract 3, 30.45 feet South of the Northeast corner of said Tract 3, then go North 88°37'50" West 313.31 feet; then go North 00°03'00" East, 30.45 feet; thence go North 28°47'10"

West 21.91 feet to a point on the Southeasterly right-of-way line of the junction of N.W. 52nd Street and 84th Avenue, said point being on a circular curve concave to the Northwest and having a radius of 95 feet, then go easterly and northerly along the arc of said curve 88.19 feet through a central angle of 53°11'29" to the point of tangency of said curve, then go North 01°22'10" East 257.54 feet; then go South 88°37'50" East 278.12 feet; then go South 0°03'00" West 383.08 feet to the Point of Beginning.

PARCEL 3.15 - ALBANY

A portion of Tracts 3 and 6, KOGER EXECUTIVE CENTER Plat of Section 22, Township 53 South, Range 40 East, according to the Plat thereof, recorded in Plat Book 91, at Page 38, of the Public Records of Miami-Dade County, Florida, being more particularly described as follows:

Commencing at the Northwest corner of Tract 3, of the said plat of Koger Executive Center; thence run South 88°37'50" East along the North boundary line of said Tract 3 a distance of 6.04 feet to the point of beginning of the parcel of land hereinafter described; thence South 88°37'50" East along the North boundary line of said Tract 3, a distance of 13.96 feet to the point of curvature of a circular curve concave to the Northwest and having for its elements a radius of 95.00 feet and a central angle of 36°48'51"; thence run Northeasterly along the arc of said curve a distance of 61.04 feet to a point; the last two (2) described courses being coincident with the South and Easterly right-of-way line of N.W. 52nd Street, thence run South 28°47'10" East along a line that is 11.02 feet Northeast of and parallel to the Northeasterly boundary of said Tract 3 a distance of 21.91 feet to a point on the North boundary of said Tract 3; thence run South 00°03'00" West a distance of 30.45 feet to a point; thence run South 88°37'50" East along a line that is 30.44 feet South of and parallel to the North boundary line of said Tract 3 a distance of 313.31 feet to a point on the East boundary line of said Tract 3; thence run South 00°03'00" West along said east boundary line a distance of 265.00 feet to the southeast corner of said Tract 3; thence run North 88°30'43" West along the South boundary line of said Tract 3, a distance of 402.00 feet a point; thence run North 01°22'10" East along a line that is 6.04 feet East of and parallel to the West boundary line of said Tract 3 a distance of 294.54 feet to the Point of Beginning.

Also described as follows:

All of Tract 3, less the West 6.04 feet thereof; and Also less the North 30.44 feet of the East 313.31 feet of said Tract 3, Koger Executive Center, according to the Plat thereof, recorded in Plat Book 91, Page 38, of the Public Records of Miami-Dade County, Florida.

and

That portion of Tract 6, lying Southwest of the following described line: Begin at a point on the South line of said Tract 6, lying 313.31 feet West of the Southeast corner of Tract 6, thence run North 28°47'10" West and 21.91 feet to a point on the Westerly boundary line of said Tract 6.

PARCEL 3.16 - BILLINGS

Portions of Tracts 13, 17 and 33, "KOGER EXECUTIVE CENTER", according to the Plat thereof, as recorded in Plat Book 91 at Page 38, of the Public Records of Miami-Dade County, Florida;

All that Portion of said Tract 13 lying East of a line 183.96 feet East of and parallel with the West line of said Tract 13;

AND

All that Portion of said Tract 17 lying East of a line 183.96 feet East of and parallel with the West line of said Tract 17 and South of a line 9.00 feet South of and parallel with the North line of said Tract 17;

AND

All that portion of said Tract 33 lying South of a line 314.82 feet South of and parallel with the North line of said Tract 33 and West of a line 210.86 feet East of and parallel with the West line of said Tract 33.

All the foregoing being more particularly described as follows:

Portions of Tracts 13, 17 and 33, "KOGER EXECUTIVE CENTER", according to the Plat thereof, as recorded in Plat Book 91, at Page 38, of the Public Records of Miami-Dade County, Florida, being more particularly described as follows:

Commence at the Northwest corner of said Tract 13; thence run South 88°37'50" East, along the North line of said Tract 13; for a distance of 183.96 feet to a point; thence run South 01°22'10" West, along a line parallel with and 183.96 feet East of as measured at right angles to the West line of said Tract 13, for a distance of 251.25 feet to the POINT OF BEGINNING of the following described parcel of land, said point lying and being on the Northerly right-of-way line of N.W. 53rd Street (Executive Center Drive), and on the arc of a 596.62 foot radius curve concave to the Northwest, and having a radial bearing of South 32°56'40" East from the center point of said curve; thence run North 01°22'10" East, along a line parallel with and 183.96 feet East of as measured at right angles to the Easterly right-of-way line of N.W. 84th Avenue, for a distance of 512.17 feet to a point; thence run South 88°37'50" East, along a line parallel with and 9.00 feet South of as measured at right angles to the North line of said Tract 17, for a distance of 70.20 feet to a point on the West line of said Tract 33; thence run South 88°34'40" East, along a line parallel with and 314.82 feet South of as measured at right angles to the Southerly right-of-way line of N.W. 54th Street, for a distance of 210.93 feet to a point; thence run South 00°01'26" East, along a line parallel with and 210.86 feet Easterly of as measured at right angles to the West line of said Tract 33, for a distance of 228.52 feet to a point on the Northerly right-of-way line of N.W. 53rd Street (Executive Center Drive); thence run South 44°44'02" West, along the previously described right-of-way line for

a distance of 275.64 feet to the point of curvature of a circular curve to the right having a radius of 596.62 feet; thence run Southwesterly, along the arc of said curve to the right through a central angle of 12°19'18", for an arc distance of 128.31 feet and a chord bearing South 50°53'41" West 128.06 feet to the POINT OF BEGINNING.

PARCEL 3.17 - MANCHESTER

A portion of Tract 33, KOGER EXECUTIVE CENTER, according to the Plat thereof, as recorded in Plat Book 91, Page 38, of the Public Records of Miami-Dade County, Florida, and described as follows:

Commence at the Northwest corner of said Tract 33; thence proceed South 88°34'40" East, along the North line of said Tract 33 for 113 feet to the Point of Beginning of the parcel to be described herein; thence continue South 88°34'40" East along said North line 270.50 feet; thence proceed South 1°21'30" West 320 feet; thence proceed South 30°11'28" East 62.75 feet to a point on the Southerly line of said Tract 33, said line being a circular curve concave to the Northwest and having a radius of 676.62 feet; thence proceed Westerly and Southerly along said circular curve thru a central angle of 15°04'32" for an arc distance of 178.03 feet to the Point of Tangency of said curve; thence proceed South 44°44'02" West and tangent to the last described curve 79.38 feet; thence proceed North 0°01'26" West 228.53 feet; thence proceed North 88°34'40" West 105.52 feet; thence proceed North 1°21'30" East 314.82 feet to the Point of Beginning.

PARCEL 3.18 - SEATTLE

A portion of Tracts 33, 34 and 35, KOGER EXECUTIVE CENTER, according to a plat thereof, as recorded in Plat Book 91, Page 38, of the Public Records of Miami-Dade County, Florida and being described as:

Beginning at the Northwest corner of said Tract 34, thence proceed South 88°34'40" East along the North line of said Tract 34 205.50 feet; thence proceed South 01°21'30" West 40 feet; thence proceed South 88°34'40" East 35.50 feet; thence proceed South 01°21'30" West 243.78 feet to the South line of said Tract 35 and a circular curve concave to the Northwest; thence proceed along the Southerly line of said Tracts 33, 34 and 35 Westerly and Southerly along said circular curve, having a radius of 676.62 feet, thru a central angle of 21°23'17" for an arc distance of 252.58 feet; thence proceed North 30°11'28" West 62.75 feet; thence proceed North 01°21'30" East 320 feet to the North line of said Tract 33; thence proceed South 88°34'40" East along said North line 26.50 feet to the Point of Beginning.

PARCEL 3.19 - DAYTON

A portion of Tract 35, of KOGER EXECUTIVE CENTER, according to the plat thereof, as recorded in Plat Book 91, at Page 38, of the Public Records of Miami-Dade County, Florida, and being more particularly described as follows:

Commence at the southeast corner of said Tract 35, said point being on the northerly right-of-way line of N.W. 53rd Street (Executive Center Drive) (80' R/W), all as shown on said plat; thence along said right-of-way line North 88°38'30" West 34.88 feet to the POINT OF BEGINNING; thence continue along said right-of-way line the following two (2) courses and distances: 1) North 88°38'30" West 204.76 feet, and 2) with a curve to the left, having a radius of 676.62 feet, and a central angle of 10°09'39", an arc distance of 119.99 feet to a point; thence North 01°21'30" East 243.78 feet to a point; thence South 88°34'40" East 44.50 feet to a point; thence North 01°21'30" East 40.00 feet to a point on the southerly right-of-way line of N.W. 54th Street; thence along said right-of-way line South 88°34'40" East 279.62 feet to a point; thence South 01°21'30" West 272.81 feet to the Point of Beginning.

PARCEL 3.22 - CLEVELAND

The East 34.88 feet of Tract 35, all of Tract 36, and the West 15.00 feet of Tract 37, of KOGER EXECUTIVE CENTER, according to the Plat thereof, recorded in Plat Book 91, Page 38, of the Public Records of Miami-Dade County, Florida, and being more particularly described as follows:

Beginning at the northwest corner of Tract 37, said point being on southerly right-of-way line of N.W. 54th Street and also being the northeast corner of Tract 36, all as shown on said plat; thence along the southerly right-of-way line of N.W. 54th Street South 88°37'34" East 15.00 feet to a point; thence along a line that is parallel with and 15.00 feet East of the West line of Tract 37 South 01°21'30" West 272.41 feet to a point on the northerly right-of-way line of N.W. 53rd Street (80' R/W); thence along the northerly right-of-way line of N.W. 53rd Street North 88°38'30" West 362.50 feet to a point; thence along a line that is parallel with and 34.88 feet west of the easterly line of Tract 35 North 01°21'30" East 272.80 feet to a point on the southerly right-of-way line of N.W. 54th Street; thence along the southerly right-of-way line of N.W. 54th Street South 88°34'40" East 347.50 feet to the Point of Beginning.

PARCEL 3.23 - CONCORD

Tract C, less the east 20.02 feet, of KOGER CENTER PARK, according to the Plat thereof, recorded in Plat Book 106, Page 15, of the Public Records of Miami-Dade County, Florida, and being more particularly described as follows:

BEGINNING at the northwest corner of Tract C, said point being on the southerly right-of-way line of N.W. 53rd Street (80' R/W), all as shown on said plat; thence along the southerly right-of-way line of N.W. 53rd Street South 88°38'30" East 349.20 feet to a point that is 20.02 feet westerly of the northeast corner of Tract C; thence along a line that is parallel with and 20.02 feet west of, when measured at right angles, to the easterly boundary of Tract C South 01°21'30" West 272.32 feet to a point on the southerly boundary of Tract C; thence along the southerly boundary of Tract C North 88°39'27" West 342.72 feet to the southwest corner of Tract C; thence along the westerly boundary of Tract C North 00°00'17" West 272.49 feet to the Point of Beginning.

52

PARCEL 3.24 - COVINGTON

The east 20.02 feet of Tract C and Tract D, less the east 34.02 feet, of KOGER CENTER PARK, according to the plat thereof, as recorded in Plat Book 106, Page 15, of the Public Records of Miami-Dade County, Florida, being more particularly described as follows:

Commence at the northeast corner of Tract D, said point being on the southerly right-of-way of N.W. 53rd Street (Executive Center Drive) (80' R/W), all as shown on said plat; thence along southerly right-of-way line of N.W. 53rd Street North 88°38'30" West 34.02 feet to the POINT OF BEGINNING; thence along a line parallel to and 34.02 feet west of the easterly boundary of Tract D South 01°21'30" West 272.22 feet to a point on the southerly boundary of Tract D; thence along the southerly boundary of Tracts D and C North 88°39'27" West 371.00 feet to a point; thence along a line parallel to and 20.02 feet west of the westerly boundary of Tract D North 01°21'30" East 272.32 feet to a point on the southerly right-of-way line of N.W. 53rd Street; thence along southerly right-of-way line of N.W. 53rd Street 88°38'30" East 371.00 feet to the Point of Beginning.

PARCEL 3.25 - SPRINGFIELD

A portion of Tract 37, of KOGER EXECUTIVE CENTER, according to the Plat thereof, as recorded in Plat Book 91, Page 38, of the Public Records of Miami-Dade County, Florida, more particularly described as follows:

COMMENCE at the northwest corner of said Tract 37, as shown on said plat, said point being on the southerly right-of-way line of Northwest 54th Street; thence along said right-of-way line, South 88°37'34" East 15.00 feet to the POINT OF BEGINNING; thence continue along said right-of-way line, South 88°37'34" East 342.00 feet to a point 6.12 feet west of the northeast corner of said Tract 37; thence along a line parallel with and 6.12 feet west of, when measured at right angles to, the easterly line of said Tract 37, South 01°21'30" West 272.32 feet to a point on the northerly right-of-way line of Northwest 53rd Street; thence along said right-of-way line, North 88°38'30" West 342.00 feet a point 15.00 feet east of the southwest corner of said Tract 37; thence along a line parallel with and 15.00 feet east of, when measured at right angles to, the westerly line of said Tract 37, North 01°21'30" East 272.41 feet to the Point of Beginning.

PARCEL 3.26 - SCRANTON

Tract 38, and the easterly 6.12 feet of Tract 37, of KOGER EXECUTIVE CENTER, according to the Plat thereof, recorded in Plat Book 91, Page 38, of the Public Records of Miami-Dade County, Florida, more particularly described as follows:

BEGINNING at the northeast corner of said Tract 38, as shown on said plat, said point being on the southerly right-of-way of Northwest 54th Street; thence along the easterly line of said Tract 38, South 01°21'30" West

272.21 feet to the southeast corner of said Tract 38, said point being on the northerly right-of-way line of Northwest 53rd Street; thence along the northerly right-of-way line of said Northwest 53rd Street; North 88°38'30" West 391.12 feet to a point 6.12 feet west of the southwest corner of said Tract 38; thence along a line parallel with and 6.12 feet west of, when measured at right angles to, the westerly line of said Tract 38, North 01°21'30" East 272.32 feet to a point on the southerly right-of-way line of Northwest 54th Street; thence along the southerly right-of-way line of said Northwest 54th Street, South 88°37'34" East 391.12 feet to the Point of Beginning.

PARCEL 3.27 - PLAZA

Tract 39, KOGER EXECUTIVE CENTER, according to the plat thereof, as recorded in Plat Book 91, Page 38, of the Public Records of Miami-Dade County, Florida.

TOGETHER WITH a non-exclusive easement for ingress, egress and parking of motor vehicles, over, upon, and across a portion of Tract 38 of KOGER EXECUTIVE CENTER, according to plat thereof, as recorded in Plat Book 91, Page 38, of the Public Records of Miami-Dade County, Florida, more particularly described as follows:

BEGINNING, at the northeast corner of said Tract 38, as shown on said plat, said point being on the southerly right-of-way line of N.W. 54th Street; thence along the easterly line of said Tract 38, South 01°21'30" West 272.21 feet to the southeast corner of said Tract 38, said point being on the northerly right-of-way line of N.W. 53rd Street (Executive Center Drive); thence along the northerly right-of-way line of said N.W. 53rd Street, North 88°38'30" West 45.00 feet to a point; thence North 01°21'30" East 228.00 feet to a point; thence North 88°37'34" West 32.00 feet to a point; thence North 01°21'30" East 44.19 feet to a point on the southerly right-of-way line of N.W. 54th Street; thence along the southerly right-of-way line of said N.W. 54th Street, South 88°37'34" East 77.00 feet to the Point of Beginning.

EXHIBIT "A2"

LEGAL DESCRIPTION OF PROPERTY OWNED BY 7950 PROFESSIONAL CENTER PHASE LLC

PARCEL 3.28 - DENVER

The East 34.02 feet of Tract D and all of Tract E, of KOGER CENTER PARK, according to the Plat thereof, as recorded in Plat Book 106, page 15, of the Public Records of Miami-Dade County, Florida, being more particularly described as follows:

Beginning at the Southeast corner of Tract E, said point being on the Westerly right-of-way line of N.W. 79th Avenue (Variable R/W), all as shown on said plat; thence along the Southerly boundary of Tracts E and D North 88° 39' 27" West 574.02 feet to a point; thence along a line parallel to and 34.02 feet West of the Easterly boundary of Tract D North 01° 21' 30" East 272.22 feet to a point on the Southerly right-of-way line of N.W. 53rd Street (80° R/W); thence along the Southerly right-of-way line of N.W. 53rd Street the following two (2) courses and distances: 1) South 88° 38' 30" East 543.03 feet; and 2) with a curve to the right having a radius of 25.00 feet, a central angle of 88° 36' 47" and a chord which bears South 44° 20' 06" East 34.92 feet, an arc distance of 38.66 feet to a point on the Westerly right-of-way line of N.W. 79th Avenue; thence along the Westerly right-of-way line of N.W. 79th Avenue South 00° 01' 43" East 247.74 feet to the Point of Beginning.

Which property is now described as follows:

Tract E, KOGER CENTER PARK, according to the Plat thereof, as recorded in Plat Book 106, page 15, of the Public Records of Miami-Dade County, Florida.

Together with:

The East 34.02 feet of Tract D, KOGER CENTER PARK, according to the Plat thereof, as recorded in Plat Book 106, page 15, of the Public Records of Miami-Dade County, Florida.

EXHIBIT "B"

EXHIBIT B TO THE PETITION FOR THE CREATION OF A DORMANT MULTI-PURPOSE SPECIAL TAXING DISTRICT FOR LANDSCAPE AND/OR ROADWAY MAINTENANCE.

AREAS TO BE MAINTAINED:

MULTI-PURPOSE MAINTENANCE (DORMANT) FOR PUBLIC ROADS AND/OR TURF, GRASS, TREES, AND SHRUBS WITHIN SUCH ROADWAYS WITHIN BOUNDARIES OF THE CDD.

MAINTENANCE SCHEDULE:

MULTI-PURPOSE MAINTENANCE – DORMANT UNLESS CDD, COMMUNITY ASSOCIATION OR PROPERTY OWNER'S ASSOCIATION DOES NOT PERFORM

NOTE: THIS SPECIAL TAXING DISTRICT ENCOMPASSES A COMMUNITY THAT INCLUDES PRIVATE DRIVES AND PUBLIC ROADS, IT SHALL BE **DORMANT**; AND SERVICE WILL ONLY COMMENCE FOLLOWING FAILURE (AS DEFINED IN A "GRANT OF PERPETUAL NON-EXCLUSIVE EASEMENT") OF ANY PROPERTY OWNER'S ASSOCIATION, COMMUNITY ASSOCIATION AND/OR COMMUNITY DEVELOPMENT DISTRICT TO PROVIDE THE REQUIRED SERVICES. ASSUMPTION OF MAINTENANCE SERVICES SHALL COMMENCE FOLLOWING ADOPTION OF THIS DISTRICT'S MULTIPURPOSE MAINTENANCE ASSESSMENT ROLL BY THE BOARD OF COUNTY COMMISSIONERS AT A PUBLIC HEARING. OTHER MAINTENANCE SERVICES MAY BE PROVIDED IN THE FUTURE AS SPECIFIED IN THE DISTRICT'S ORDINANCE AND AMENDMENTS THERETO. IN THE EVENT THIS DISTRICT IS ACTIVATED, THE FOLLOWING AREAS MAY BE MAINTAINED:

PRIVATE DRIVES AND/OR TURF, GRASS, TREES, AND SHRUBS WITHIN INFRASTRUCTURAL PARCELS LYING WITHIN THE BOUNDARIES OF THE CDD THAT ARE OWNED AND/OR MAINTAINED BY THE CDD, COMMUNITY ASSOCIATION, OR PROPERTY OWNER'S ASSOCIATION.

THE LEGAL DESCRIPTION OF THE SPECIAL TAXING DISTRICT CONSISTS OF DESCRIPTIONS OF INDIVIDUAL PROJECT PARCELS; IN THE EVENT THIS DISTRICT IS ACTIVATED TO PROVIDE MAINTENANCE SERVICES WITHIN PRIVATE DRIVES OR INFRASTRUCTURAL PARCELS WITHIN A SPECIFIC PROJECT PARCEL.

EXHIBIT "C"

LIST OF FOLIO NUMBERS

KOALA MIAMI REALTY HOLDING CO., INC.:

Parcel / Building Name	Address	PARCEL FOLIO NUMBER
Dutcher - vacant	Vacant	35-3022-007-0010
Dutcher - vacant	Vacant	35-3022-007-0015
Richmond	8420 NW 52th St	35-3022-007-0020
Albany	8400 NW 52th St	35-3022-007-0030
Palm Coast I	5225 NW 87th Ave	35-3022-007-0040
Palm Coast II	5255 NW 87th Ave	35-3022-007-0070
Portland	5200 NW 84th Ave	35-3022-007-0050
Phoenix	8400 NW 53th St	35-3022-007-0080
Columbus	5205 NW 84th Ave	35-3022-007-0060
Rochester	8390 NW 53rd St	35-3022-007-0090
Austin	8675 NW 53rd St	35-3022-007-0100
Athens	8405 NW 53rd St	35-3022-007-0120
Charleston	8600 NW 53rd Terr	35-3022-007-0140
Monterey	8410 NW 53rd Terr	35-3022-007-0160
Augusta	8685 NW 53rd Terr	35-3022-007-0180
Savannah	8525 NW 53rd Terr	35-3022-007-0190
Savannah		35-3022-007-0181
Macon	8401 NW 53rd Terr	35-3022-007-0131
Flint	8395 NW 53rd St	35-3022-007-0130
Billings	8375 NW 53rd St	35-3022-007-0331
Manchester	8355 NW 53rd St	35-3022-007-0330
Seattle	8325 NW 53rd St	35-3022-007-0340
Dayton	8301 NW 53rd St	35-3022-007-0350
Cleveland	8245 NW 53rd St	35-3022-007-0360
Springfield	8125 NW 53rd St	35-3022-007-0370
Scranton	8075 NW 53rd St	35-3022-007-0380
Plaza	7905-55 NW 53rd St	35-3022-007-0390
Covington	8070 NW 53rd St	35-3022-011-0040
Concord	8120 NW 53rd St	35-3022-011-0030

7950 PROFESSIONAL CENTER PHASE LLC:

Denver	7950 NW 53rd St	35-3022-011-0050

RESOLUTION NO. 03-40

A RESOLUTION OF THE MAYOR AND CITY COUNCIL OF THE CITY OF DORAL, FLORIDA, AUTHORIZING MIAMI-DADE COUNTY TO CONTINUE THE PROCESS OF CREATING SPECIAL TAXING DISTRICTS WITHIN THE CITY OF DORAL FOR THE FUNDING OF SPEICAL SERVICES; AUTHORIZING TRANSMITTAL; AND PROVIDING FOR AN EFFECTIVE DATE.

WHEREAS, Section 18-2 of the Code of Miami-Dade County allows for the creation and establishment of special taxing districts within incorporated areas for the purpose of public improvements as set forth in that section; and

WHEREAS, Section 18-2 requires the approval of the City of Doral (the "City") when the special taxing district falls within the City's boundaries; and

WHEREAS, Section 18-2 provides for the procedure for creating special taxing districts for the purpose of providing street lights in new subdivision; and

WHEREAS, the City wishes to allow Miami-Dade County to continue creating special taxing districts for street light, landscape maintenance, and any other applicable improvements on new subdivisions within the City.

NOW, THEREFORE, BE IT RESOLVED BY THE MAYOR AND CITY COUNCIL OF THE CITY OF DORAL, FLORIDA, AS FOLLOWS:

Section 1. **Recitals.** The above recitals are true and correct and are incorporated herein by this reference.

Section 2. **Approval.** In accordance with Section 18-2 of the Code of Miami-Dade County, the City hereby approves and authorizes Miami-Dade County to

continue establishing special taxing districts for the purpose of providing street lights, landscape maintenance, and any other applicable improvements in all new subdivisions within the City's boundaries.

Section 3. **Transmittal.** The City Clerk is hereby authorized to transmit to a certified copy of this Resolution to Miami-Dade County.

Section 4. **Effective Date.** This resolution shall take effect immediately on its adoption.

The foregoing Resolution was offered by Councilmember Van Name, who moved its adoption. The motion was seconded by Vice Mayor Cabrera and upon being put to a vote, the vote was as follows:

Mayor Juan Carlos Bermudez	yes
Vice Mayor Peter Cabrera	yes
Councilmember Michael DiPietro	yes
Councilmember Sandra Ruiz	yes
Councilmember Robert Van Name	yes

PASSED and ADOPTED this 12th day of November, 2003.

JUAN CARLOS BERMUDEZ, MAYOR

ATTEST:

CITY CLERK

APPROVED AS TO FORM AND
LEGAL SUFFICIENCY FOR THE
SOLE USE OF THE CITY OF DORAL:

CITY ATTORNEY

STREET LIGHTING AGREEMENT

(a) Installation and/or removal of FPL-owned facilities described as follows:

Lights Installed		
Fixture Rating (in Lumens)	Fixture Type	# Installed

Lights Removed		
Fixture Rating (in Lumens)	Fixture Type	# Removed

Poles Installed	
Pole Type	# Installed

Poles Removed	
Pole Type	# Removed

Conductors Installed	Conductors Removed
_____ Feet not Under Paving	_____ Feet not Under Paving
_____ Feet Under Paving	_____ Feet Under Paving

(b) Modification to existing facilities other than described above (explain fully):

That, for and in consideration of the covenants set forth herein, the parties hereto covenant and agree as follows:

FPL AGREES:

1. To install or modify the street lighting facilities described and identified above (hereinafter called the Street Lighting System), furnish to the Customer the electric energy necessary for the operation of the Street Lighting System, and furnish such other services as are specified in this Agreement, all in accordance with the terms of FPL's currently effective street lighting rate schedule on file at the Florida Public Service Commission (FPSC) or any successive street lighting rate schedule approved by the FPSC.

THE CUSTOMER AGREES:

2. To pay a contribution in the amount of $_____ prior to FPL's initiating the requested installation or modification.

3. To purchase from FPL all of the electric energy used for the operation of the Street Lighting System.

4. To be responsible for paying, when due, all bills rendered by FPL pursuant to FPL's currently effective street lighting rate schedule on file at the FPSC or any successive street lighting rate schedule approved by the FPSC, for facilities and service provided in accordance with this agreement.

5. To provide access, final grading and, when requested, good and sufficient easements, suitable construction drawings showing the location of existing and proposed structures, identification of all non-FPL underground facilities within or near pole or trench locations, and appropriate plats necessary for planning the design and completing the construction of FPL facilities associated with the Street Lighting System.
6. To perform any clearing, compacting, removal of stumps or other obstructions that conflict with construction, and drainage of rights-of-way or easements required by FPL to accommodate the street lighting facilities.

IT IS MUTUALLY AGREED THAT:

7. Modifications to the facilities provided by FPL under this agreement, other than for maintenance, may only be made through the execution of an additional street lighting agreement delineating the modifications to be accomplished. Modification of FPL street lighting facilities is defined as the following:

   a. the addition of street lighting facilities:
   b. the removal of street lighting facilities; and
   c. the removal of street lighting facilities and the replacement of such facilities with new facilities and/or additional facilities.

60

Modifications will be subject to the costs identified in FPL's currently effective street lighting rate schedule on file at the FPSC, or any successive schedule approved by the FPSC.

8. FPL will, at the request of the Customer, relocate the street lighting facilities covered by this agreement, if provided sufficient right-of-ways or easements to do so. The Customer shall be responsible for the payment of all costs associated with any such Customer-requested relocation of FPL street lighting facilities. Payment shall be made by the Customer in advance of any relocation.

9. FPL may, at any time, substitute for any luminaire/lamp installed hereunder another luminaire/lamp which shall be of at least equal illuminating capacity and efficiency.

10. This Agreement shall be for a term of ten (10) years from the date of initiation of service, and, except as provided below, shall extend thereafter for further successive periods of five (5) years from the expiration of the initial ten (10) year term or from the expiration of any extension thereof. The date of initiation of service shall be defined as the date the first lights are energized and billing begins, not the date of this Agreement. This Agreement shall be extended automatically beyond the initial the (10) year term or any extension thereof, unless either party shall have given written notice to the other of its desire to terminate this Agreement. The written notice shall be by certified mail and shall be given not less than ninety (90) days before the expiration of the initial ten (10) year term, or any extension thereof.

11. In the event street lighting facilities covered by this agreement are removed, either at the request of the Customer or through termination or breach of this Agreement, the Customer shall be responsible for paying to FPL an amount equal to the original installed cost of the facilities provided by FPL under this agreement less any salvage value and any depreciation (based on current depreciation rates as approved by the FPSC) plus removal cost.

12. Should the Customer fail to pay any bills due and rendered pursuant to this agreement of otherwise fail to perform the obligations contained in this Agreement, said obligations being material and going to the essence of this Agreement, FPL may cease to supply electric energy or service until the Customer has paid the bills due and rendered or has fully cured such other breach of this Agreement. Any failure of FPL to exercise its rights hereunder shall not be a waiver of its rights. It is understood, however, that such discontinuance of the supplying of electric energy or service shall not constitute a breach of this Agreement by FPL, nor shall it relieve the Customer of the obligation to perform any of the terms and conditions of this Agreement.

13. The obligation to furnish or purchase service shall be excused at any time that either party is prevented from complying with this Agreement by strikes, lockouts, fires, riots, acts of God, the public enemy, or by cause or causes not under the control of the party thus prevented from compliance and FPL shall not have the obligation to furnish service if it is prevented from complying with this Agreement by reason of any partial, temporary or entire shut-down of service which, in the sole opinion of FPL, is reasonably necessary for the purpose of repairing or making more efficient all or any part of its generating or other electrical equipment.

14. This Agreement supersedes all previous Agreements or representations, either written, oral or otherwise between the Customer and FPL, with respect to the facilities referenced herein and constitutes the entire Agreement between the parties. This Agreement does not create any rights or provide any remedies to third parties or create any additional duty, obligation or undertakings by FPL to third parties.

15. This Agreement shall inure to the benefit of, and be binding upon the successors and assigns of the Customer and FPL.

16. This Agreement is subject to FPL's Electric Tariff, including, but not limited to, the General Rules and Regulations for Electric Service and the Rules of the FPSC, as they are written, or as they may be hereafter revised, amended or supplemented. In the event of any conflict between the terms of this Agreement and the provisions of the FPL Electric Tariff or the FPSC Rules, the provisions of the Electric Tariff and FPSC Rules shall control, as they are now written, or as they may be hereafter revised, amended or supplemented.

IN WITNESS WHEREOF, (The parties hereby caused this Agreement to be executed in triplicate by their duly authorized representative to be effective as of the day and year first written above.

Changes and Terms Accepted:
Miami-Dade County SLID ( ), _____
Customer (Print or type Organization)

By: _____
Signature (Authorized Representative)

_____
(Print or type name)

Tile: _____

FLORIDA POWER & LIGHT COMPANY

By: _____
(Signature)

_____
(Print or type name)

Title: _____

MEMORANDUM

To: Aristides Rivera, P.E., P.L.S., Director
Public Works Department

Date: January 15, 2002

From: Diane O'Quinn Williams, Director
Department of Planning and Zoning

Subject: Street Lighting, Maintenance of Landscape, Walls Adjacent to Double-Frontage Lots and Lakes Special Taxing Districts

Section: As Required
District: As Required
Council: As Required

Effective September 5, 2001, all tentative plats in the unincorporated area of Miami-Dade County submitted to the Land Development Division of the Public Works Department, must be accompanied by a properly executed petition for all applicable special taxing districts including, but not limited to street lights, maintenance of landscape, walls adjacent to double frontage lots, entrance features and lakes. Final Plats will not be presented to the Board of County Commissioners for consideration until the applicable special taxing districts are created, and all fees have been paid. In that regard, to ensure expeditious processing, this Memorandum may serve as approval for certain future special taxing district application requests as being consistent with the intent and purpose of the adopted 2005-2015 Comprehensive Development Master Plan (CDMP). Policy 4A – Capital Improvement Element states: Appropriate funding mechanisms will be adopted and applied by Miami-Dade County in order to assure the fiscal resources to maintain acceptable levels of service. Such funding mechanisms include special tax districts, municipal taxing service units, local option taxes, user fees, local gas tax, general obligation bond, impact fees, and special purpose authorities, or others as appropriate and feasible (Adopted Components as Amended through April 2001, page IX-10). The provision for services over and above minimum for neighborhoods and communities may be accomplished through the special taxing district as may be prescribed by the code.

The Department of Planning and Zoning (DP&Z) has no objection to a blanket approval with condition to establish future special taxing districts as limited to requests for street lighting, landscape maintenance, walls adjacent to double-frontage lots and lake maintenance districts. The previously noted special taxing districts may be established on the condition that the DP&Z review all landscape maintenance districts for compliance with plantings in public rights-of-way and lake maintenance districts for consistency with Landscape Code (Chapter 18A) Section 18A-6(L) Storm Water Retention/Detention Areas.

DO'QW: GA: TBS

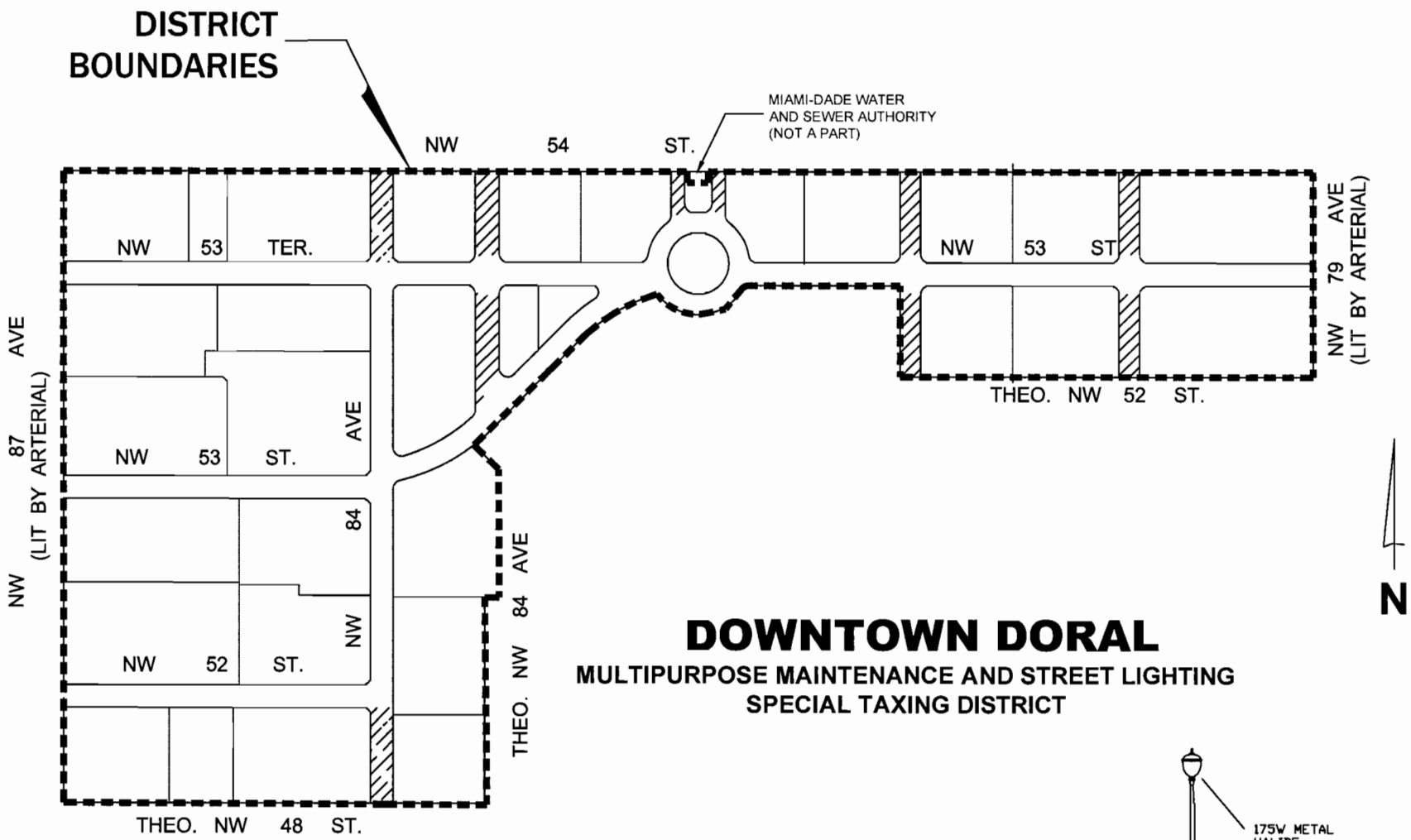

DOWNTOWN DORAL

MULTIPURPOSE MAINTENANCE AND STREET LIGHTING SPECIAL TAXING DISTRICT

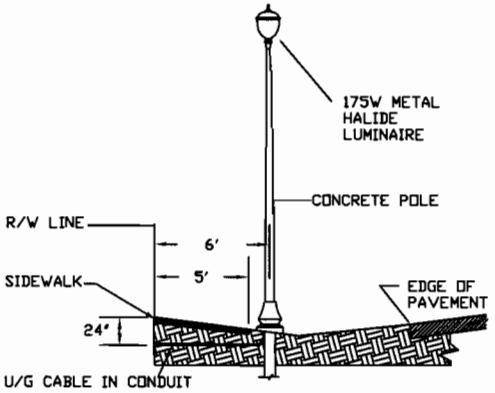

TYPICAL UNDERGROUND INSTALLATION N.T.S.

156- 175 WATT METAL HALIDE ACORN STYLE POST-TOP STREETLIGHTS MOUNTED ON WASHINGTON STYLE CONCRETE POLES INSTALLED APPROXIMATELY 65 TO 75 FEET APART.

SEE ATTACHED SHEET FOR SERVICE DESCRIPTIONS AND LOCATIONS

L- /M- (COM. 0012)
SECTION: 22 - 53 - 40

PRIVATE ROAD

EXHIBIT "A"

ATTACHMENT TO EXHIBIT "A"

DOWNTOWN DORAL
MULTIPURPOSE MAINTENANCE AND STREET LIGHTING
SPECIAL TAXING DISTRICT

AREAS TO BE MAINTAINED:

SWALE AREAS ADJACENT TO PUBLIC RIGHTS-OF-WAY AND MEDIANS.

MAINTENANCE SCHEDULE:

A.) LAWN / GRASS
1) CUT BIMONTHLY AS REQUIRED
2) FERTILIZE AND WEED CONTROL AS NEEDED
3) TREAT FOR PESTS/DISEASES AS NEEDED
4) IRRIGATE WITH AUTOMATIC SYSTEM AND ELECTRICAL SERVICE FOR SAME.

B.) TREES / SHRUBS
1) TRIM, FERTILIZE AND TREAT FOR PESTS AS NEEDED
2) REPLACE AS REQUIRED

NOTE: THIS SPECIAL TAXING DISTRICT ENCOMPASSES A PRIVATE DRIVE COMMUNITY, IT SHALL BE **DORMANT**; AND SERVICE WILL ONLY COMMENCE FOLLOWING FAILURE (AS DEFINED IN A "GRANT OF PERPETUAL NON-EXCLUSIVE EASEMENT" SUBMITTED AT THE SAME TIME AS THIS PETITION) OF ANY HOME-OWNER'S ASSOCIATION AND/OR THE DOWNTOWN DORAL COMMUNITY DEVELOPMENT DISTRICT TO PROVIDE THE REQUIRED SERVICES. ASSUMPTION OF MAINTENANCE SERVICES SHALL COMMENCE FOLLOWING ADOPTION OF THIS DISTRICT'S MULTIPURPOSE MAINTENANCE ASSESSMENT ROLL BY THE BOARD OF COUNTY COMMISSIONERS AT A PUBLIC HEARING. OTHER MAINTENANCE SERVICES MAY BE PROVIDED IN THE FUTURE AS SPECIFIED IN THE DISTRICT'S ORDINANCE AND AMENDMENTS THERETO. IN THE EVENT THIS DISTRICT IS ACTIVATED, THE FOLLOWING AREAS NEED TO BE MAINTAINED:

FUTURE COMMON AREAS LYING WITHIN THE DISTRICT BOUNDARIES THAT ARE OWNED AND/OR MAINTAINED BY ANY HOMEOWNER'S ASSOCIATION AND/OR THE DOWNTOWN DORAL CDD.