Memorandum

MIAMI-DADE COUNTY

Date: January 21, 2010

To: Honorable Chairman Dennis Moss and Members, Board of County Commissioners

Agenda Item No. 5(G)

From: George M. Burgess
County Manager

Subject: Resolution Relating to an Application by Inn on North Bay, Ltd for a Class I Permit to Reconstruct a Non-Water Dependant Concrete Deck for a Dining Area over Tidal Waters that is Associated with an Upland Restaurant, and Replace an Existing Docking Facility on Biscayne Bay at 1855 79th Street Causeway in North Bay Village

---

Attached, please find for your consideration an application by Inn on North Bay, Ltd for a Class I permit. Also attached is the recommendation of the Director of the Department of Environmental Resources Management and a resolution seeking the Board's approval of the aforesaid Class I permit.

Assistant County Manager

/

Memorandum

MIAMI-DADE COUNTY

Date: January 7, 2010

To: George M. Burgess
County Manager

From: Carlos Espinosa, P.E., Director
Environmental Resources Management

Subject: Resolution Relating to an Application by Inn on North Bay, Ltd for a Class I Permit to Reconstruct a Non-Water Dependant Concrete Deck for a Dining Area over Tidal Waters that is Associated with an Upland Restaurant, and Replace an Existing Docking Facility on Biscayne Bay at 1855 79th Street Causeway in North Bay Village

---

Recommendation
I have reviewed the attached Class I permit application by Inn on North Bay, Ltd. Based upon the applicable evaluation factors set forth in Chapter 24-48.3 of the Code of Miami-Dade County, Florida, I recommend that the Board of County Commissioners (Board) approve the issuance of a Class I permit for the reasons set forth below.

Scope
The project site is located at 1855 79th Street Causeway, North Bay Village, Miami-Dade County, in Commission District 4.

Fiscal Impact/Funding Source
Not applicable.

Track Record/Monitor
Not applicable.

Background
The subject Class I permit application involves the reconstruction of an existing non-water dependant concrete deck used as a dining area associated with the upland restaurant and the replacement of a docking facility located at 1855 79th Street Causeway in North Bay Village, Miami-Dade County, Florida. The facilities need rebuilding due to their deteriorating condition. The proposed project is required to be reviewed and approved by the Board at a public hearing because the scope of work is not specifically referenced in Section 24-48.2 of the Code of Miami-Dade County (Code) as work that can be processed administratively with a short form application, and therefore requires a standard form application.

The project site consists of a waterfront commercial property with a docking facility and an upland five-story hotel owned by the Inn on North Bay, Ltd, in North Bay Village. The docking facility, for use by restaurant and hotel patrons, is comprised of an L-shaped dock with a finger pier. The applicant also operates a restaurant at the property that uses the over water marginal concrete deck as a dining area with associated tables, chairs, and umbrellas. Because the deck is utilized as a dining area, it is considered a non-water dependant structure. Although Section 24-48.24 of the Code contains a general prohibition against the installation of non-water dependant structures, it also states that this prohibition shall not apply to fixed structures that were fully permitted before October 1985 or to their repair, provided permits are obtained. A review of historical documents revealed that the subject concrete deck structure was permitted by North Bay Village on September 29, 1967 and has operated as a dining facility since the early 1970s.

The proposed work will occur on sovereign submerged lands within an area that has been leased to the applicant by the Board of Trustees of the Internal Improvement Trust Fund of the State of Florida (Attachment E). The area of the proposed work contains some sparse seagrasses and macro algae. However, the reconstruction project has been designed to remain in the existing footprint to avoid new impacts to resources and to stay within the sovereign submerged lands lease boundaries.

DERM recommends that approval for the proposed work be granted, as the structures are not expected to adversely affect surface water quality with the exception of temporary impacts during their demolition and reconstruction. The replacement of the docking facility will result in minor water quality impacts typically associated with this type of work. The applicant has agreed to provide a contribution to the Biscayne Bay Environmental Enhancement Trust Fund in the amount of $6,840 to compensate for the impacts associated with the reconstruction and operation of the docking facility.

The proposed project has been designed in accordance with all relevant Miami-Dade County coastal construction criteria and is consistent with all other Miami-Dade County coastal protection provisions. Please find attached a DERM Project Report which sets forth the reasons the proposed project is recommended for approval by DERM pursuant to the applicable evaluation factors set forth in Section 24-48.3 of the Code. The conditions, limitations, and restrictions set forth in the Project Report attached hereto are incorporated herein by references hereto.

Attachments

Attachment A: Class I Permit Application
Attachment B: Permit Applicant/Authorized Agent Statement, Engineer Letter of Certification, and Project Sketches
Attachment C: Zoning Memorandum
Attachment D: Names and Addresses of Owners of All Riparian Property within Three Hundred (300) Feet of the Proposed Work
Attachment E: Florida Department of Environmental Protection Submerged Land Lease
Attachment F: DERM Project Report

NOTICE OF PUBLIC HEARING ON AN APPLICATION BY INN ON NORTH BAY, LTD FOR A CLASS 1 PERMIT TO RECONSTRUCT A NON-WATER DEPENDANT CONCRETE DECK FOR A DINING AREA OVER TIDAL WATERS THAT IS ASSOCIATED WITH AN UPLAND RESTAURANT, AND REPLACE AN EXISTING DOCKING FACILITY ON BISCAYNE BAY AT 1855 79TH STREET CAUSEWAY IN NORTH BAY VILLAGE, MIAMI-DADE COUNTY, FLORIDA

BOARD OF COUNTY COMMISSIONERS
MIAMI-DADE COUNTY, FLORIDA

NOTICE IS HEREBY GIVEN pursuant to Article IV, Division 1 of Chapter 24 of the Code of Miami-Dade County that the Board of County Commissioners of Miami-Dade County will hold and conduct a public hearing on a request by Inn on North Bay, Ltd for a Class I permit to reconstruct a non-water dependant concrete deck for a dining area over tidal waters that is associated with an upland restaurant, and replace an existing docking facility at 1855 79th Street Causeway, North Bay Village, Miami-Dade County. Such public hearing will be held on the 21st day of January, 2010, at 9:30 AM, in the County Commission Chambers on the 2nd Floor of the Stephen P. Clark Center in Miami, Florida.

Plans and details concerning the work requested in the application may be reviewed by interested persons at the office of the Miami-Dade County Department of Environmental Resources Management, 4th Floor, 701 NW 1st Court, Miami, FL 33136.

Oral statements will be heard and appropriate records made. For accuracy of records, all important facts and arguments should be prepared in writing in triplicate, with two copies being submitted to the Deputy Clerk of the County Commission at the hearing or mailed to her beforehand (Diane Collins, Deputy Clerk), 111 NW 1st Street, Stephen P. Clark Center, Suite 17-202, Miami, Florida 33128; and with one copy being submitted beforehand to the Miami-Dade County Department of Environmental Resources Management, 4th Floor, 701 NW 1st Court, Miami, FL 33136.

A person who decides to appeal any decision made by any Board, Agency, or Commission with respect to any matter considered at its meeting or hearing, will need a record of proceedings. Such person may need to ensure that a verbatim record of the proceedings is made, including the testimony and evidence upon which the appeal is to be based.

BOARD OF COUNTY
COMMISSIONERS
MIAMI-DADE COUNTY, FLORIDA

HARVEY RUVIN, CLERK

BY: _____
Diane Collins, Deputy Clerk

MEMORANDUM

(Revised)

TO: Honorable Chairman Dennis C. Moss and Members, Board of County Commissioners

DATE: January 21, 2010

FROM: R. A. Cuevas, Jr. County Attorney

SUBJECT: Agenda Item No. 5(G)

Please note any items checked.

_____	**"3-Day Rule" for committees applicable if raised**
_____	**6 weeks required between first reading and public hearing**
_____	**4 weeks notification to municipal officials required prior to public hearing**
_____	**Decreases revenues or increases expenditures without balancing budget**
_____	**Budget required**
_____	**Statement of fiscal impact required**
_____	**Ordinance creating a new board requires detailed County Manager's report for public hearing**
✓	**No committee review**
_____	**Applicable legislation requires more than a majority vote (i.e., 2/3's ____, 3/5's ____, unanimous _____) to approve**
_____	**Current information regarding funding source, index code and available balance, and available capacity (if debt is contemplated) required**

5

Approved _____ Mayor
Veto _____
Override _____

Agenda Item No. 5(G)
1-21-10

RESOLUTION NO. _____

RESOLUTION RELATING TO AN APPLICATION BY INN ON NORTH BAY, LTD FOR A CLASS I PERMIT TO RECONSTRUCT A NON-WATER DEPENDANT CONCRETE DECK FOR A DINING AREA OVER TIDAL WATERS THAT IS ASSOCIATED WITH AN UPLAND RESTAURANT, AND REPLACE AN EXISTING DOCKING FACILITY ON BISCAYNE BAY AT 1855 79TH STREET CAUSEWAY IN NORTH BAY VILLAGE, MIAMI-DADE COUNTY, FLORIDA

WHEREAS, this Board desires to accomplish the purposes outlined in the accompanying memorandum, a copy of which is incorporated herein by reference,

NOW, THEREFORE, BE IT RESOLVED BY THE BOARD OF COUNTY COMMISSIONERS OF MIAMI-DADE COUNTY, FLORIDA, that this Board having considered all the applicable factors contained within Section 24-48.3 of the Code of Miami-Dade County, hereby approves the application by Inn on North Bay, Ltd for a Class I permit to reconstruct a non-water dependant concrete deck for a dining area over tidal waters that is associated with an upland restaurant, and replace an existing docking facility on Biscayne Bay at 1855 79th Street Causeway, North Bay Village, Miami-Dade County, Florida, subject to the conditions set forth in the memorandum from the Director of the Miami-Dade County Department of Environmental Resources Management, a copy of which is attached hereto and made a part hereof. The issuance of this approval does not relieve the applicant from obtaining all applicable Federal, State, and local permits.

The foregoing resolution was offered by Commissioner , who moved its adoption. The motion was seconded by Commissioner and upon being put to a vote, the vote was as follows:

Dennis C. Moss, Chairman
Jose "Pepe" Diaz, Vice-Chairman

Bruno A. Barreiro	Audrey M. Edmonson
Carlos A. Gimenez	Sally A. Heyman
Barbara J. Jordan	Joe A. Martinez
Dorrin D. Rolle	Natacha Seijas
Katy Sorenson	Rebeca Sosa
Sen. Javier D. Souto	

The Chairperson thereupon declared the resolution duly passed and adopted this 21st day of January, 2010. This resolution shall become effective ten (10) days after the date of its adoption unless vetoed by the Mayor, and if vetoed, shall become effective only upon an override by this Board.

MIAMI-DADE COUNTY, FLORIDA
BY ITS BOARD OF COUNTY COMMISSIONERS

HARVEY RUVIN, CLERK

Approved by County Attorney as to form and legal sufficiency.

Peter S. Tell

By:_____
Deputy Clerk

Attachment A

Class I Permit Application

MIAMI-DADE COUNTY

Class I Permit Application

FOR DEPARTMENTAL USE ONLY

Date Received:

Application Number: 2008-CLIPER-00322

Application Fee: $2,350.00

Application must be filled out in its entirety. Please indicate N/A for non-applicable fields.

1. Applicant Information:

Name: Inn on North Bay, Ltd.

Address: 1819 79th Street Causeway

North Bay Village, FL Zip Code: 33141

Phone #: (305) 865-7100 Fax#: (305) 868-3483

Email: Charlie.Grentner@gmail.com

* This should be the applicant's information for contact purposes.

2. Applicant's Authorized Permit Agent:

Agent is allowed to process the application, furnish supplemental information relating to the application and bind the applicant to all requirements of the application.

Name: Mr. Kirk Lofgren, Managing Member, Ocean Consulting, LLC

Address: 340 Minorca Ave, Suite 5

Coral Gables, FL Zip Code: 33134

Phone #: 305-921-9344 Fax #: 305-677-3254

Email: kirk@oceanconsultingfl.com

3. Location where proposed activity exists or will occur (latitude and longitude are only necessary for properties without address or folio #):

Folio #(s): 23-3209-0001-20 Latitude: 25°50'58.27"N Longitude: 80° 8'55.12"W

Street Address: 1855 79th St. Causeway Section: 09 Township: 53 Range: 42

In City or Town: North Bay Village Near City or Town:

Name of waterway at location of the activity: Biscayne Bay

4. Describe the proposed activity (check all that apply):

☐ Seawall
☐ New/Replacement Seawall
☐ Seawall Cap
☐ Batter Piles
☐ King Piles
☐ Footer/Toe Wall
☐ Riprap

☐ Dock(s)
☐ Pier(s)
☐ Viewing Platform

☐ Boatlift
☐ Mooring Piles
☐ Fender Piles
☐ Davits

☐ Dredging
☐ Maintenance
☐ New
☐ Filling

☐ Mangrove Trimming
☐ Mangrove Removal

Class I Permit Application by Inn on North Bay, Ltd to Reconstruct a Non-Water Dependant Concrete Deck for a Dining Area over Tidal Waters that is Associated with an Upland Restaurant, and Replace an Existing Docking Facility on Biscayne Bay

RECEIVED
DEC 23 2009
DERM
ENVIRONMENTAL RESOURCES REGULATION DIVISION

☐ Other:

Estimated project cost = $ 100,000

Are you seeking an after-the-fact approval (ATF)? ☐Yes ☑No If "Yes", describe the ATF work:

5. Proposed Use (check all that apply):

☐ Single Family
☐ Multi-Family
☑ Private
☐ Public
☐ Commercial
☐ Industrial
☐ Utility

6. If the proposed work relates to the mooring of vessels provide the following information (please also indicate if the applicant does not have a vessel):

Proposed Vessel Type (s):

Vessel Make/Model (If known):

Draft (s)(range in inches.): Length (s)(range in feet.):

Total Number of Slips: 6

7. List all permits or certifications that have been applied for or obtained for the above referenced work:

Issuing Agency	Type of Approval	Identification Number	Application Date	Approval Date
DERM	Class I	2008-CLIPER-00322		Pending
ACOE	GP/NWP			Pending
FDEP	ERP			Pending

8. Contractor Information (If known):

Name: Southeast Marine Construction License # (County/State): CGC 060467

Address: 404 NE 38th Street Zip Code: 33334

Phone #: 954-630-2300 Fax #: 954-630-2381 E-mail: semarine@bellsouth.net

9. IMPORTANT NOTICE TO APPLICANTS: The written consent of the property owner is required for all applications to be considered complete. Your application WILL NOT BE PROCESSED unless the Applicant **and** Owner Consent portion of the application is completed below. You have the obligation to apprise the Department of any changes to information provided in this application.

Application is hereby made for a Miami-Dade County Class I permit to authorize the activities described herein. I agree to or affirm the following:

- I possess the authority to authorize the proposed activities at the subject property, and
- I am familiar with the information, data and plans contained in this application, and
- To the best of my knowledge and belief, the information, data and plans submitted are true, complete and accurate, and
- I will provide any additional information, evidence or data necessary to provide reasonable assurance that the proposed project will comply with the applicable State and County water quality standards both during construction and after the project is completed, and
- I am authorizing the permit agent listed in Section 2 of this application to process the application, furnish supplemental information relating to this application and bind the applicant to all requirements of this application, and
- I agree to provide access and allow entry to the project site to inspectors and authorized representatives of Miami-Dade County for the purpose of making the preliminary analyses of the site and to monitor permitted activities and adherence to all permit conditions.

RECEIVED
DEC 23 2009
DERM
ENVIRONMENTAL RESOURCES
MANAGEMENT DIVISION

A. IF APPLICANT IS AN INDIVIDUAL

Signature of Applicant | Print Applicant's Name | Date

B. IF APPLICANT IS OTHER THAN AN INDIVIDUAL OR NATURAL PERSON
(Examples: Corporation, Partnership, Trust, LLC, LLP, etc.)

Charles Grentner, President, 1819, Inc, General Partner, Inn on North Bay, Ltd. | Ltd. | Florida

Print Name of Applicant (Enter the complete name as registered) | Type (Corp, LLC, LLP, etc.) | State of Registration/Incorporation

Under the penalty of perjury, I certify that I have the authority to sign this application on behalf of the Applicant, to bind the Applicant, and if so required to authorize the issuance of a bond on behalf of the Applicant. (If asked, you must provide proof of such authority to the Department). ***Please Note: If additional signatures are required, pursuant to your governing documents, operating agreements, or other applicable agreements or laws, you must attach additional signature pages. ***

Signature of Authorized Representative | Charles G. Grentner | President | 12/23/09

Signature of Authorized Representative | Print Authorized Representative's Name | Title | Date

C. IF APPLICANT IS A JOINT VENTURE Each party must sign below(If more than two members, list on attached page)

Print Name of Applicant (Enter the complete name as registered) | Type (Corp, LLC, LLP, etc.) | State of Registration/Incorporation

Print Name of Applicant (Enter the complete name as registered) | Type (Corp, LLC, LLP, etc.) | State of Registration/Incorporation

Under the penalty of perjury, I certify that I have the authority to sign this application on behalf of the Applicant, to bind the Applicant, and if so required to authorize the issuance of a bond on behalf of the Applicant. (If asked, you must provide proof of such authority to the Department). ***Please Note: If additional signatures are required, pursuant to your governing documents, operating agreements, or other applicable agreements or laws, you must attach additional signature pages. ***

Signature of Authorized Representative | Print Authorized Representative's Name | Title | Date

Signature of Authorized Representative | Print Authorized Representative's Name | Title | Date

10

10. WRITTEN CONSENT OF THE PROPERTY OWNER OF THE AREA OF THE PROPOSED WORK

I/We are the fee simple owner(s) of the real property located at 1855 79th Street Causeway, NBV 33141 Miami-Dade County, Florida, otherwise identified in the public records of Miami-Dade County as Folio No. 23-3209-0001-20. I am aware and familiar with the contents of this application for a Miami-Dade County Class I Permit to perform the work on or adjacent to the subject property, as described in Section 4 of this application. I possess the riparian rights to the area of the proposed work (if applicable) and hereby consent to the work identified in this Class I Permit application.

A. IF THE OWNER(S) IS AN INDIVIDUAL

Signature of Owner	Print Owner's Name	Date
Signature of Owner	Print Owner's Name	Date

B. IF THE OWNER IS OTHER THAN AN INDIVIDUAL OR NATURAL PERSON

(Examples: Corporation, Partnership, Joint Venture, Trust, LLC, LLP, etc.)

Print Name of Owner (Enter the complete name as registered)	Type (Corp, LLC, LLP, etc.)	State of Registration/Incorporation
Charles Grentner, President, 1819, Inc, General Partner, Inn on North Bay, Ltd.	Ltd.	Florida

1819 79th Street Causeway, North Bay Village, Florida 33141
Address of Owner

Under the penalty of perjury, I certify that I have the authority to sign this application on behalf of the Owner, to bind the Owner, and if so required to authorize the issuance of a bond on behalf of the Owner. (If asked, you must provide proof of such authority to the Department). ***Please Note: If additional signatures are required, pursuant to your governing documents, operating agreements, or other applicable agreements or laws, you must attach additional signature pages. ***

Signature of Authorized Representative	Print Authorized Representative's Name	Title	Date
[signature]	Charles G. Grentner	President	12/23/09
Signature of Authorized Representative	Print Authorized Representative's Name	Title	Date

Please Review Above

Appropriate signature(s) must be included in:

Box 9: either A, B **or** C

AND

Box 10: either A **or** B

RECEIVED
DEC 23 2009
DERM
ENVIRONMENTAL RESOURCES
REGULATION DIVISION

11

Attachment B

Permit Applicant/Authorized Agent Statement, Engineer Letter of Certification, and Project Sketches

OCEAN CONSULTING, LLC · 340 Minorca Avenue, Suite 5 · Coral Gables, FL 33134
Tel: 305-921-9344 · Fax: 305-677-3254
www.oceanconsultingfl.com

PERMIT APPLICANT/AUTHORIZED AGENT STATEMENT

Date: December 7, 2009

RECEIVED
DEC 23 2009
DERM
ENVIRONMENTAL RESOURCES
REGULATION DIVISION

To:
Miami Dade County DERM
Class I Permitting Program
701 NW 1st Court
Miami FL, 33136

Re: Class I Standard Form Permit Application Number (2008-CLI-PER-00322) by Inn on North Bay, Ltd to Reconstruct a Non-Water Dependant Concrete Deck for a Dining Area over Tidal Water that is Associated with an Upland Restaurant, and Replace an Existing Docking Facility on Biscayne Bay

By the attached Class I Standard Form permit application with supporting documents, I, Kirk Lofgren, am the permit applicant/applicant's authorized agent and hereby request permission to perform the following: Class I Standard Form Permit Application Number by Inn on North Bay, Ltd to Reconstruct a Non-Water Dependant Concrete Deck for a Dining Area over Tidal Water that is Associated with an Upland Restaurant, and Replace an Existing Docking Facility on Biscayne Bay. I understand that a Miami-Dade County Class I Standard Form Permit is required to perform this work.

If approval is granted for the proposed work by the Board of County Commissioners, complete and detailed plans and calculations of the proposed work shall be prepared by an engineer registered/licensed in the State of Florida in accordance with the minimum requirements of Chapter 24 of the Code of Miami-Dade County, Florida. Said plans and calculations shall be subject to the review and approval of the Department of Environmental Resources Management. The permit applicant will secure the services of an engineer registered/licensed in the State of Florida to conduct inspections throughout the construction period, and said engineer shall prepare all required drawings of record. In the event that the proposed work which is the subject of this Class I Permit application involves the cutting or trimming of a mangrove tree(s), a detailed plan of the proposed cutting or trimming shall be prepared by a licensed landscape architect and submitted to the Department for review and approval, and the permit applicant will secure the services of a licensed landscape architect to supervise the trimming or cutting.

Respectfully submitted,

Kirk J. Lofgren, Managing Member, Ocean Consulting, LLC

OCEAN CONSULTING, LLC · 340 Minorca Avenue, Suite 5 · Coral Gables, FL 33134
Tel: 305-921-9344 · Fax: 305-677-3254
www.oceanconsultingfl.com

ENGINEER LETTER OF CERTIFICATION

December 7, 2009

Miami-Dade County DERM
Class I Permitting Program
701 NW 1st Court
Miami FL, 33136

Re: Class I Standard Form Permit Application Number (2008-CLI-PER-00322) by Inn on North Bay, Ltd to Reconstruct a Non-Water Dependant Concrete Deck for a Dining Area over Tidal Water that is Associated with an Upland Restaurant, and Replace an Existing Docking Facility on Biscayne Bay

Ladies and Gentlemen:

This letter will certify that I am an engineer registered/licensed in the State of Florida, qualified by education and experience in the area of construction, and that to the best of my knowledge and belief, the proposed work does not violate any laws of the State of Florida or any provision of the Code of Miami Dade County which may be applicable, that diligence and recognized standard practices of the engineering profession have been exercised in the engineer's design process for the proposed work, and in my opinion based upon my knowledge and belief, the following will not occur:

a. Harmful obstruction or undesirable alteration of the natural flow of the water within the area of the proposed work.
b. Harmful or increased erosion, shoaling of channels or stagnant areas of water. (not applicable to class IV permits)
c. Material injury to adjacent property.
d. Adverse environmental impacts from changes in water quality or quantity. (applicable to Class IV permits only)

Further, I have been retained by the applicant to provide inspections throughout the construction period and to prepare a set of reproducible record prints of drawings showing changes made during the construction process based upon the marked-up prints, drawings, and other data furnished by the contractor to me.

Sincerely,

[Print Name. PE]
P.E. # 57555

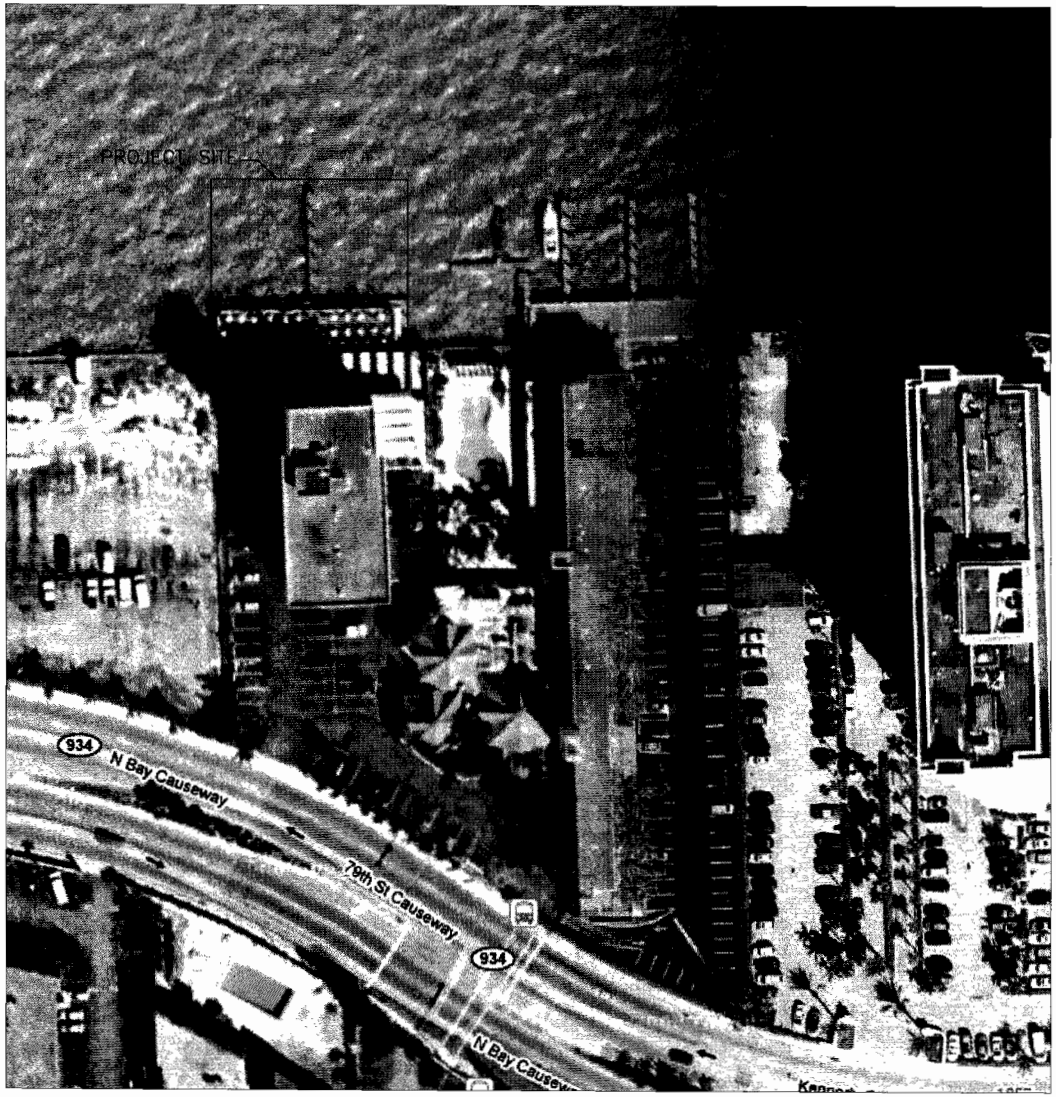

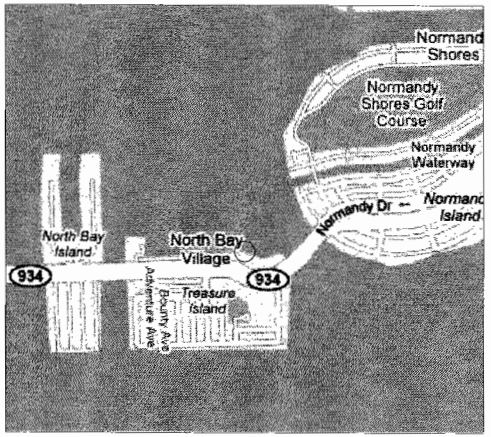

SHUCKER'S RESTAURANT
CONCRETE PLATFORM REPLACEMENT

CLIENT:

INN ON NORTH BAY, LTD

ENVIRONMENTAL CONSULTANT:

Ocean Consulting, LLC

PROJECT ENGINEER:

DYNAMIC ENGINEERING SOLUTIONS, INC.

KEY PLAN

SEAL / SIGNATURE / DATE

JOHN H. OMELAER, PE52733, EDS8829

CONSTRUCTION DRAWINGS

Issue #	Issue Date / Set
1	

Project No.: 8-345

LOCATION MAP

SCALE:

SHEET NO.

S-1

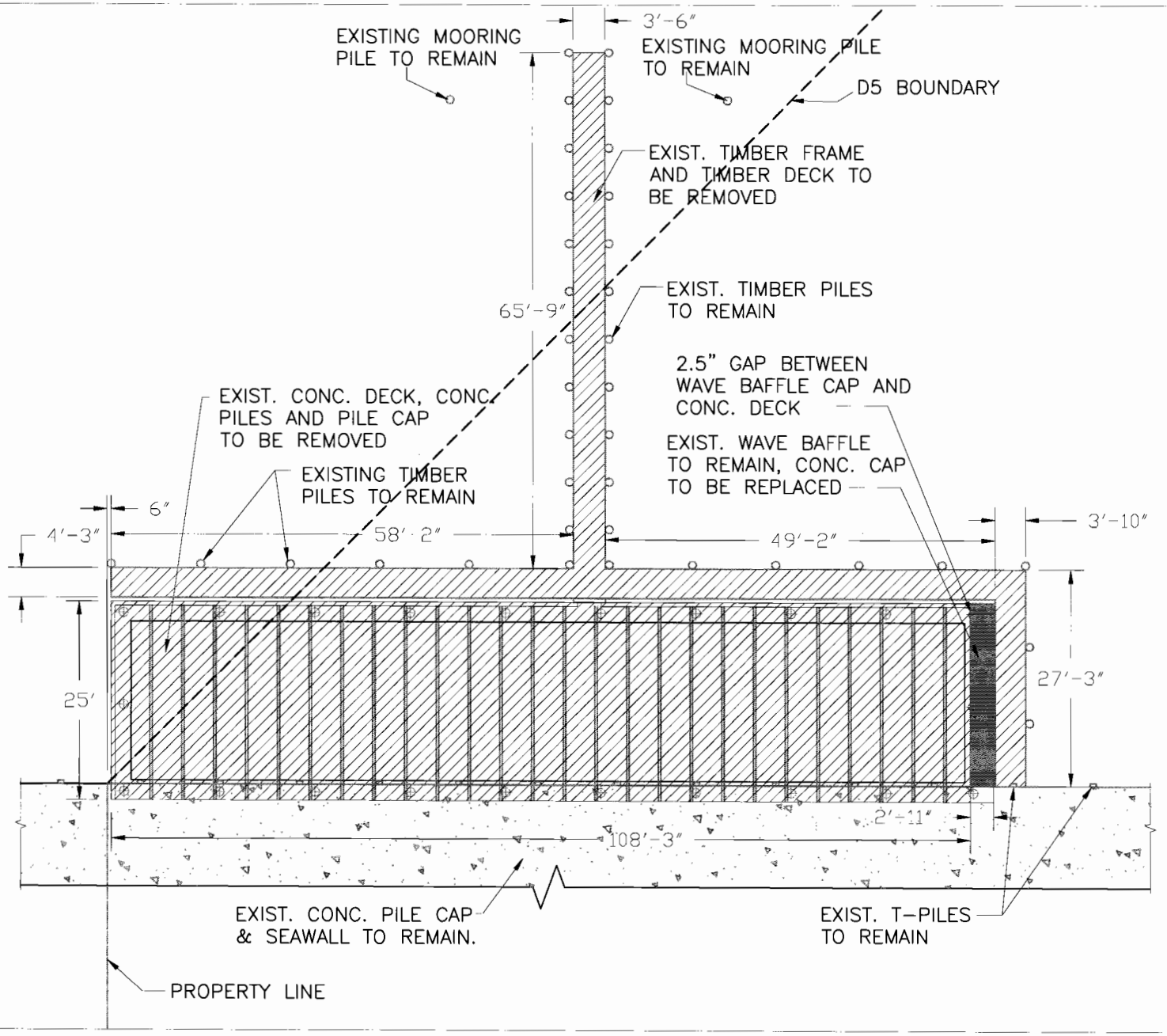

SEACREST RESTAURANT
CONCRETE PLATFORM REPLACEMENT

CLIENT:
INN ON NORTH BAY, LTD

ENVIRONMENTAL CONSULTANT:
Ocean Consulting, LLC

PROJECT CONSULTANTS:
DYNAMIC ENGINEERING SOLUTIONS, INC.

KEY PLAN

SEAL / SIGNATURE / DATE

JOHN H. OMELASKI, PE53731, EB26829

CONSTRUCTION DRAWINGS

Issue #	Issue Date / Set
1	

Project No.: 8-345

EXISTING CONDITION & DEMO PLAN

SCALE: AS SHOWN

SHEET NO.

S-2

16

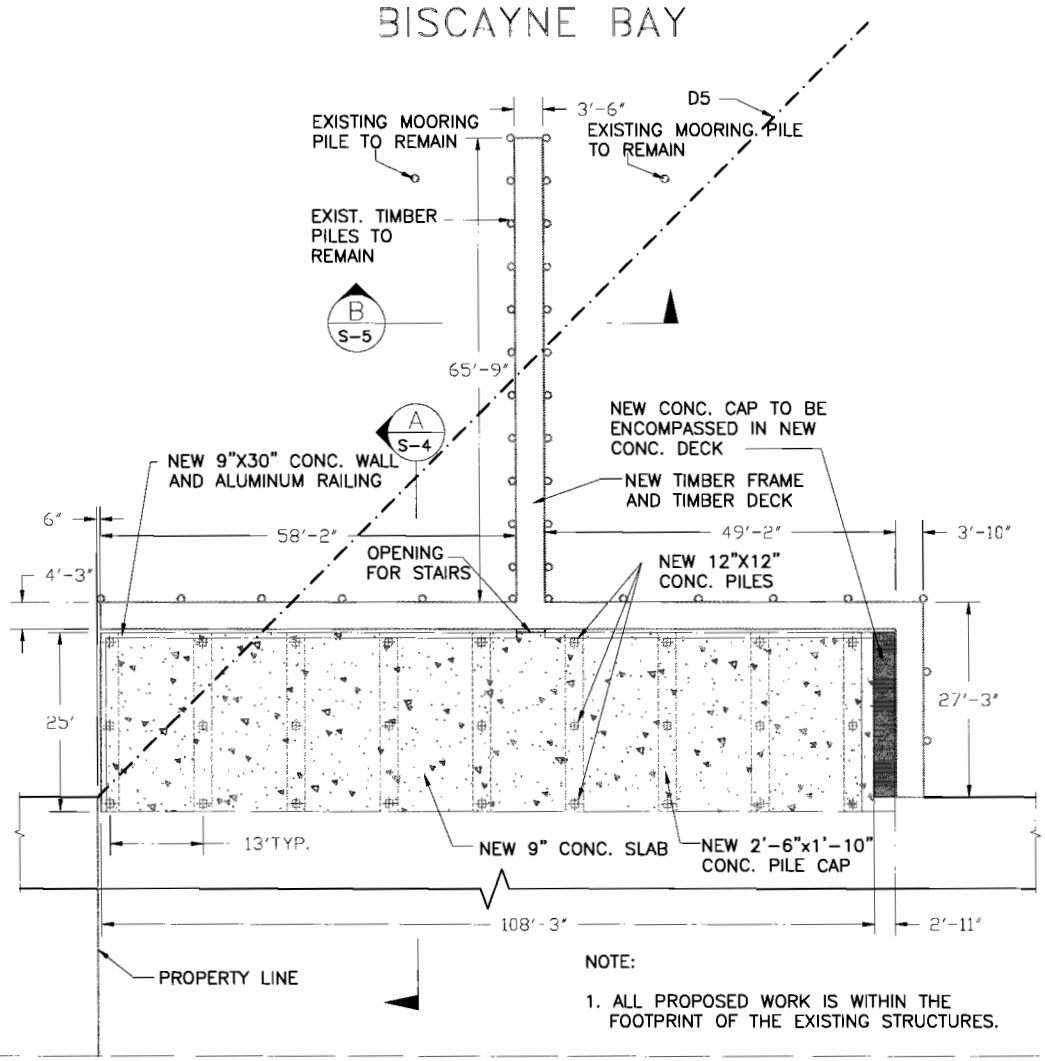

NOTE:

1. ALL PROPOSED WORK IS WITHIN THE FOOTPRINT OF THE EXISTING STRUCTURES.

SHUCKER'S RESTAURANT
CONCRETE PLATFORM REPLACEMENT

CLIENT:
INN ON NORTH BAY, LTD

ENVIRONMENTAL CONSULTANT:
Ocean Consulting, LLC

PROJECT ENGINEER:
DYNAMIC ENGINEERING SOLUTIONS, INC.

KEY PLAN

SEAL / SIGNATURE / DATE

JOHN H. OMSLAHR, PE52733, EB26829

CONSTRUCTION DRAWINGS

Issue # Issue Date / Set
1

Project No.: 8-345

PROPOSED PLAN

SCALE: AS SHOWN

SHEET NO

S-3

17

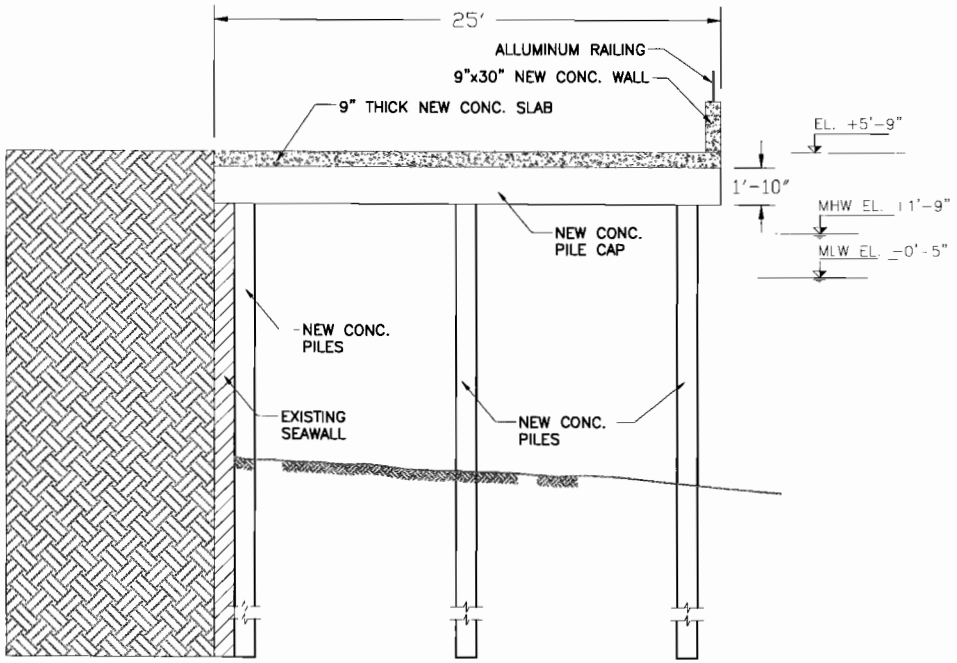

SECTION A / S-3
1"=6'-0"

NOTE:
1. ALL ELEVATIONS REFERENCE TO NGVD29.
2. ALL PROPOSED WORK ARE WITHIN THE FOOTPRINT OF THE EXISTING STRUCTURES.

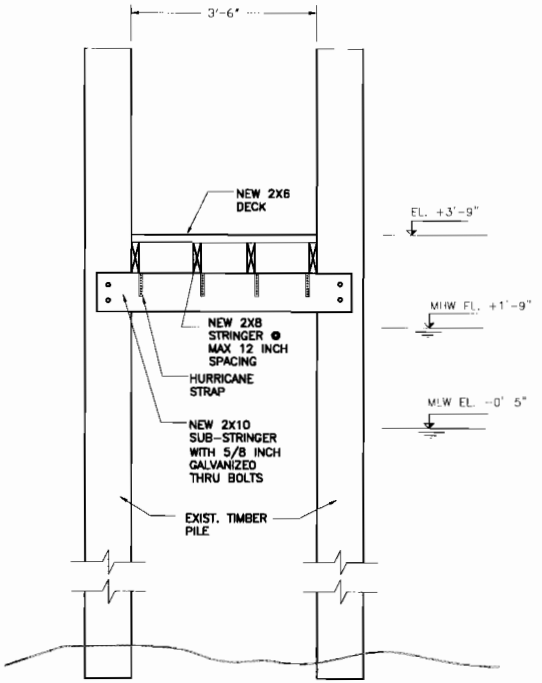

SECTION B / S-3
1"=2'-0"

NOTE:
1. ALL ELEVATIONS REFERENCE TO NGVD29.
2. ALL PROPOSED WORK ARE WITHIN THE FOOTPRINT OF THE EXISTING STRUCTURES.

ocean

SHUCKER'S RESTAURANT
CONCRETE PLATFORM REPLACEMENT

CLIENT:
INN ON NORTH BAY, LTD
1519 NETH Sunset Causeway
Miami, Florida 33141

ENVIRONMENTAL CONSULTANT:
Ocean Consulting, LLC
540 Minorca Avenue, Suite 1
Coral Gables, Florida 33134
Tel: (305) 921-0344
Fax: (305) 877-3334

PROJECT ENGINEER:
DYNAMIC ENGINEERING SOLUTIONS, INC.
2001 N. Federal Highway, Suite 212
Pompano Beach, FL 33060
Tel: (954) 545-1740
Fax: (954) 545-1721

KEY PLAN

SEAL / SIGNATURE / DATE

JOHN H. OMSLAER, PE32733, EN26829

CONSTRUCTION DRAWINGS

Issue # Issue Date / Set
①

Project No.: 8-345

CONCRETE DECK & DOCK SECTION

SCALE: AS SHOWN

SHEET NO.
S-4

18

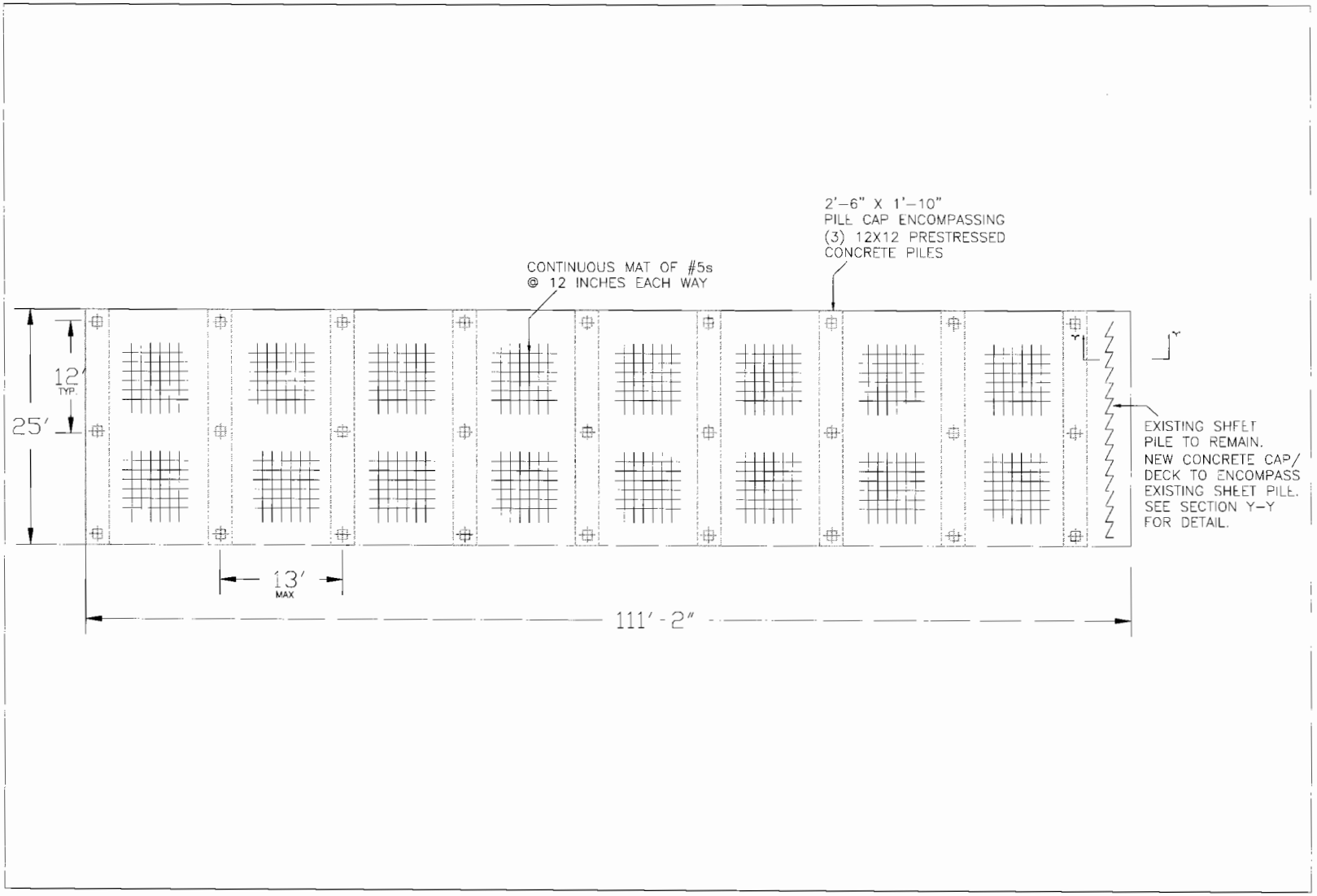

ocean

KRUCKER'S RESTAURANT
CONCRETE PLATFORM REPLACEMENT

CLIENT:
INN ON NORTH BAY, LTD

ENVIRONMENTAL CONSULTANT:
Ocean Consulting, LLC

PROJECT ENGINEER:
DYNAMIC ENGINEERING SOLUTIONS, INC.

KEY PLAN

SEAL / SIGNATURE / DATE

JOHN M. OMSLAER, PE52733, ENG029

CONSTRUCTION DRAWINGS

Issue # Issue Date / Set
①

Project No.: S-345

PROPOSED CONCRETE DECK STEEL PLAN

SCALE: AS SHOWN

SHEET NO.

S-4A

19

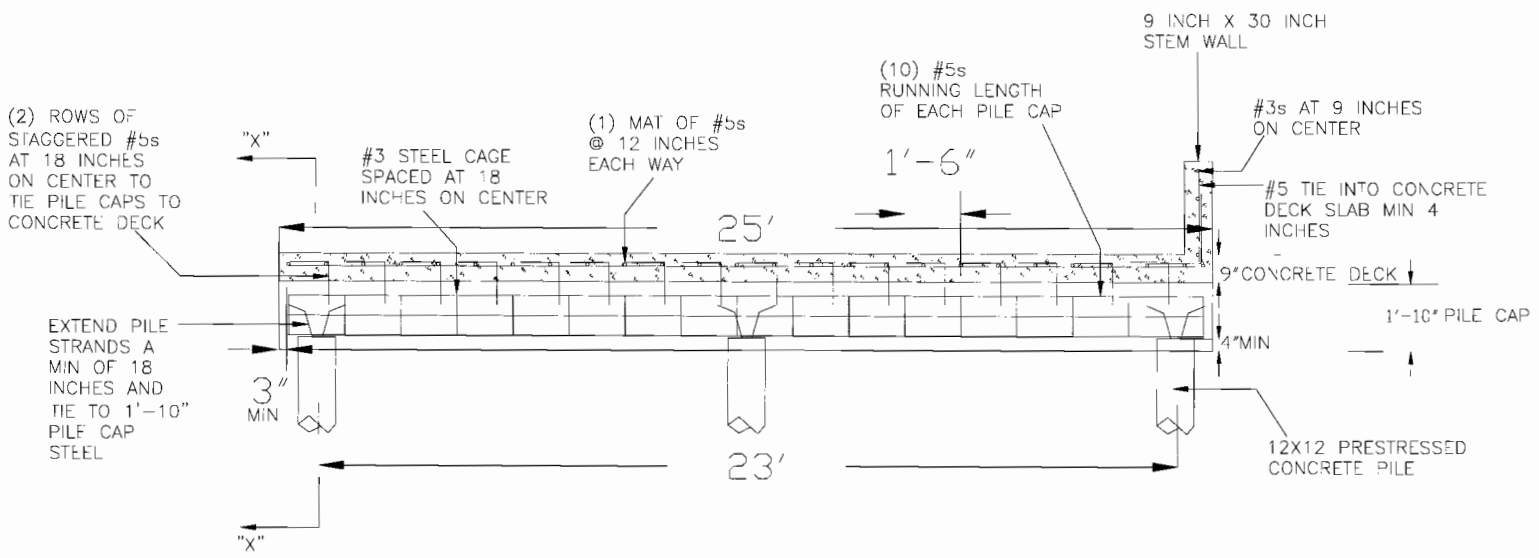

PILE CAP TIE-IN DETAIL

ocean

KRUCKER'S RESTAURANT
CONCRETE PLATFORM REPLACEMENT

CLIENT:
INN ON NORTH BAY, LTD

ENVIRONMENTAL CONSULTANT:
Ocean Consulting, LLC

PROJECT ENGINEER:
DYNAMIC ENGINEERING SOLUTIONS, INC.

KEY PLAN

SEAL / SIGNATURE / DATE

JOHN H. OMSLAHR, PE52733, 8/8/2020

CONSTRUCTION DRAWINGS

Issue # Issue Date / Set
①

Project No.: 8-345

PROPOSED PILE CAP AND DECK STEEL DETAILS

SCALE: AS SHOWN

SHEET NO.

S-4B

20

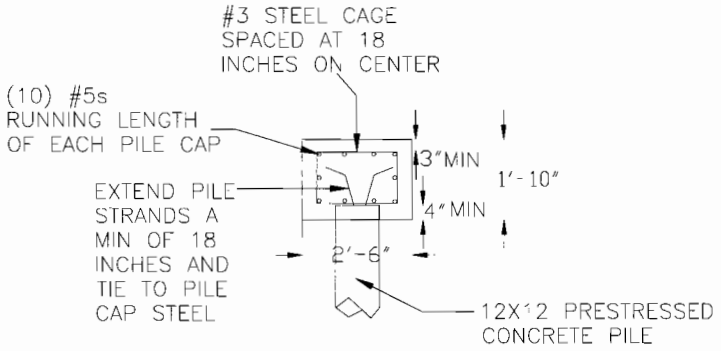

PILE CAP SECTION DETAIL ('X-X')

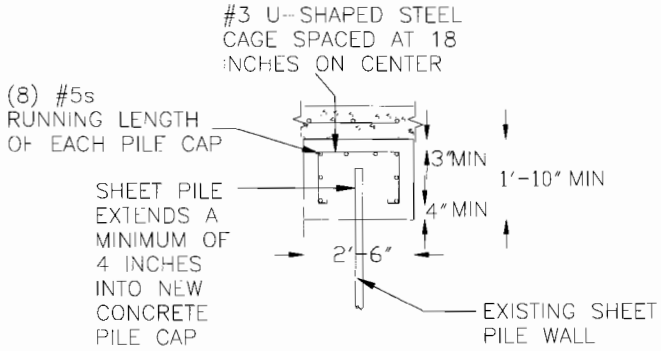

SHEET PILE AND CAP CONNECTION DETAIL ('Y-Y')

SHUCKER'S RESTAURANT
CONCRETE PLATFORM REPLACEMENT

CLIENT:
INN ON NORTH BAY, LTD

ENVIRONMENTAL CONSULTANT:
Ocean Consulting, LLC

PROJECT ENGINEER:
DYNAMIC ENGINEERING SOLUTIONS, INC.

KEY PLAN

SEAL / SIGNATURE / DATE

JOHN H. OMSLAER, PE52753, SEC6829

CONSTRUCTION DRAWINGS

Issue # Issue Date / Set
1

Project No.: S-345

PROPOSED PILE CAP DETAILS

SCALE: AS SHOWN

SHEET NO.
S-4C

21

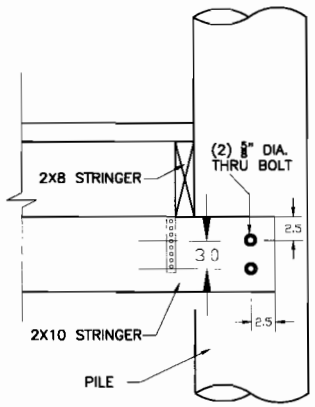

PILE CONNECTION DETAIL

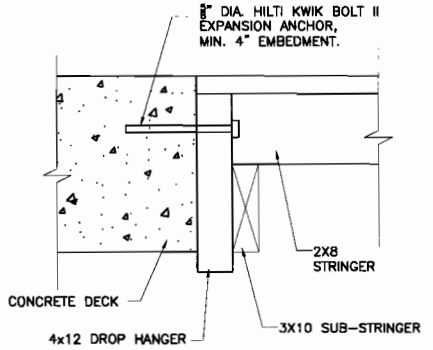

CONCRETE PLATFORM CONNECTION DETAIL

GENERAL NOTES:

1. Construction to follow Florida Building Code 2004 edition and amendments as applicable and all Local, State, and Federal Laws.

2. Licensed Contractor shall verify the existing conditions prior to commencement of the work. Any conflicts or omissions between existing conditions or the various elements of the working drawings shall be brought to the attention of the Engineer prior to the commencement of the work. The Licensed Contractor and all subcontractors are responsible for all lines, elevations, and measurements in connection with their work.

3. Do not scale drawings for dimensions.

4. Any deviation and/or substitution from the information provided herein shall be submitted to the Engineer for their approval prior to commencement of work.

5. All unanticipated or unforeseen demolition and/or new construction conditions which require deviation from the plans and notes herein shall be reported to the Engineer prior to commencement of work.

6. All new work and/or materials shall conform to all requirements of each administrative body having jurisdiction in each pertaining circumstance.

7. All new materials and/or patchwork shall be provided to match existing materials and/or adjoining work where practical except as specifically noted herein.

8. Licensed Contractor to shall use all possible care to protect all existing materials, surfaces, and furnishings from damage during all phases of construction.

9. Licensed Contractor to verify location of existing utilities prior to commencing work.

10. The Licensed contractor to install and remove all shoring and bracing as required for the proper execution of the work.

11. Licensed Contractor to obtain all permits as necessary from all Local, State, and Federal agencies.

ADDITIONAL CONSTRUCTION NOTES:

REMOVAL

1. Demolish and dispose of existing 115' x 25' concrete deck and concrete beams around perimeter of deck.
2.Extract and dispose of approximately 24 concrete support piles under deck.

CONCRETE PILE CAPS & DECK

1. Provide and drive 27, new, 12" x 12", prestressed, concrete, dock piles to support 12, new, concrete pile caps for concrete deck (115' x 25').
2. Construct and form 9, 25' long x 2' 6" wide x 1' 10" thick, reinforced, concrete pile caps, per engineer specifications.
3. Tie in reinforcing steel, connecting to new concrete dock piles, per engineer specifications, to be placed into formwork for pile caps.
4. Place 5,000 psi concrete into formwork by means of tremie hose from concrete pump truck. Provide chamfered edges, light broom finish and fibermesh additive to retard cracking and corrosion. Note: After concrete has cured, formwork will be removed for preparation of slab work to be done on top of new pile caps.
5. Construct formwork for new, 115' x 25' x 9", reinforced, concrete slab, connecting to new, concrete pile caps, per engineer specifications.
6. Place 5,000 psi concrete into formwork by means of tremie hose from concrete pump truck. Provide chamfered edges, light broom finish and fibermesh additive to retard cracking and corrosion.

WOOD PIERS

Rebuild 2 piers (25' x 4' & 115' x 4'), next to concrete deck, connecting to existing piles, as follows:

1. Framing to be .40, ACQ, marine treated, #2, pressure treated lumber secured with hot dipped galvanized hardware, using double thru bolts and double stringer framing system.
2. Decking to be Ultra Tropical, 2" x 6", decking boards secured with stainless steel decking screws.

ocean

SHUCKER'S RESTAURANT
CONCRETE PLATFORM REPLACEMENT

CLIENT:
INN ON NORTH BAY, LTD

ENVIRONMENTAL CONSULTANT:
Ocean Consulting, LLC

PROJECT ENGINEER:
DYNAMIC ENGINEERING SOLUTIONS, INC.

KEY PLAN

SEAL / SIGNATURE / DATE

JOHN H. OMSLAHR, PE53733, EB26829

CONSTRUCTION DRAWINGS

Issue # Issue Date / Set
①

Project No.: 8-345

DETAIL & NOTES

SCALE: AS SHOWN

SHEET NO.
S-5

22

Attachment C

Zoning Memorandum

Memorandum

MIAMI-DADE COUNTY

Date:

To: Lisa Spadafina, Manager
Coastal Resources
Environmental Resources Management

From: Allison Hill, Biologist I
Coastal Resources
Environmental Resources Management

Subject: Class I Permit Application by Inn on North Bay, Ltd to Reconstruct a Non-Water Dependant Deck for a Dining Area Over Tidal Waters that is Associated with an Upland Restaurant, and Replacement of an Existing Docking Facility on Biscayne Bay

---

Pursuant to Section 24-48.2(II)(A)(7), Code of Miami-Dade County, Florida, a substantiating letter shall be submitted by the applicant stating that the proposed project does not violate any zoning laws. Said letter will be submitted after approval by the Miami-Dade County Board of County Commissioners and prior to issuance of the Class I Permit.

Attachment D

Names and Addresses of Owners of All Riparian Property within Three Hundred (300) Feet of the Proposed Work

2332090000100

CONCORD DEVELOPMENT GROUP LLC
719 MERIDIAN AVE APT 2
MIAMI BEACH, FL 33139-6103

2332090000110

NORTH BAY VLGE INVEST TRU LLC
150 W FLAGLER ST STE 1525
MIAMI, FL 33130-1557

2332090000120

THE INN ON THE BAY LTD
1819 79TH STREET CSWY
MIAMI BEACH, FL 33141-4215

2332090000131

THE INN ON THE BAY LTD
1819 79TH STREET CSWY
MIAMI BEACH, FL 33141-4215

2332090000180

FLORIDA REAL EST CO LLC
100 SECOND AVE STE 901S
ST PETERSBURG, FL 33701

2332090000230

SHOPPES OF NO BAY VILLAGE II LLC
1320 S DIXIE HWY STE 781
MIAMI, FL 33146-2953

2332090000251

THE ATKINSON TRUST LLC
1855 NW 124 ST
MIAMI, FL 33181

2332090000253

THE ATKINSON TRUST LLC
1855 NW 124 ST
MIAMI, FL 33181

2332090000260

THE ATKINSON TRUST LLC
1855 NW 124 ST
MIAMI, FL 33181

2332090170001

REFERENCE ONLY
NO BAY WHITE HOUSE CONDO NO 1

2332090170010

CELSA MARTINEZ
1800 79TH STREET CSWY APT A
MIAMI BEACH, FL 33141-4236

2332090170020

GRETEL MACIAS
1800 79TH STREET CSWY APT A102
MIAMI BEACH, FL 33141-4207

2332090170030

ILEANA A PEREZ
1800 79 ST CSWY A 103
N BAY VILLAGE, FL 33141-4207

2332090170040

MIGUEL S RIOS
1800 79TH STREET CSWY APT A104
MIAMI BEACH, FL 33141-4207

2332090170050

MIGUEL RIOS
1800 79TH STREET CSWY APT A105
MIAMI BEACH, FL 33141-4207

2332090170060

MIRTA D RIOS
1800 79TH STREET CSWY APT A106
MIAMI BEACH, FL 33141-4207

2332090170070

ANNA E & LORENA MORRISON
1510 S TREASURE DR
MIAMI BEACH, FL 33141-4127

2332090170080

HOPE INVEST AT KENDALL INC
14996 SW 59TH ST
MIAMI, FL 33193-2057

2332090170090

OSCAR JIMENEZ
1800 79TH STREET CSWY APT A109
MIAMI BEACH, FL 33141-4208

2332090170100

MARTHA BOYLE
1800 79TH STREET CSWY APT A110
MIAMI BEACH, FL 33141-4208

2332090170110

YULAK M VALDES
1800 79TH STREET CSWY APT A111
MIAMI BEACH, FL 33141-4208

2332090170120

CHARLES COLBERT LE &W
LOUISE COLBERT LE
REM GISELE LOUISE COLBERT
1800 79TH STREET CSWY APT A112
MIAMI BEACH, FL 33141-4208

2332090170130

JOAN STEIGER
1800 79TH STREET CSWY APT A201
MIAMI BEACH, FL 33141-4251

2332090170140

ROGER FERRER
1800 79TH STREET CSWY APT A202
MIAMI BEACH, FL 33141-4251

2332090170150

MAYLIN MARTINEZ
1800 79TH STREET CSWY APT A203
MIAMI BEACH, FL 33141-4226

2332090170160

ALEX SCHRODER RIVERA
133 NE 2ND AVE APT 1901
MIAMI, FL 33132-2914

2332090170170

BLANCA E PAZ
1800 79TH STREET CSWY APT A205
MIAMI BEACH, FL 33141-4226

2332090170180

CARLOS S OLIVA
ENRIQUE J GARCIA
11112 GRIFFING BLVD
MIAMI, FL 33161-7250

2332090170190

ANDRES MONTALVO
1800 79TH STREET CSWY APT A207
MIAMI BEACH, FL 33141-4226

2332090170200

MARILYN TORRES
1800 79TH STREET CSWY APT A208
MIAMI BEACH, FL 33141-4226

2332090170210

EMILY TORRES
1800 79TH STREET CSWY APT A209
MIAMI BEACH, FL 33141-4226

2332090170220

ALEX SCHRODER RIVERA
133 NE 2ND AVE APT 1901
MIAMI, FL 33132-2914

2332090170230

GUILLERMO GARCIA &W MARICELA
1710 S THEASURE DR
NORTH BAY VILLAGE, FL 33141-4335

2332090170240

AURA D SOCORRO DAVILA &
MARIA DAVILA JTRS
1800 79TH STREET CSWY # A
MIAMI BEACH, FL 33141-4236

2332090170250

PATRICK GREEN &W MARIA
1800 79TH STREET CSWY APT A301
MIAMI BEACH, FL 33141-4228

2332090170260

GLORIA C RESTREPO &
ARILIA MARTORELL
1800 79TH STREET CSWY APT A302
MIAMI BEACH, FL 33141-4266

2332090170270

BERNARD SKOLNICK &
ELEANOR CASPER
130 W 86TH ST
NEW YORK, NY 10024-4040

2332090170280

MANUEL S BORRAJO &
AUGUSTO M PENA
2351 SW 37TH AVE PH 3
MIAMI, FL 33145-3072

2332090170290

SALVATORE SCRIVO
1800 79TH STREET CSWY APT A305
MIAMI BEACH, FL 33141-4229

2332090170300

MARIA DEL CARMEN ROZZO
1800 79TH STREET CSWY APT A306
MIAMI BEACH, FL 33141-4229

2332090170310

SANTIAGO E GONZALEZ
1800 79TH STREET CSWY APT A307
MIAMI BEACH, FL 33141-4229

2332090170320

GLORIA LITTMAN
% NATASHA A BRIGHTMAN
40 E 9TH ST APT 5J
NEW YORK, NY 10003-6423

2332090170330

ERNESTO ZAMORA
1800 79TH STREET CSWY APT A309
MIAMI BEACH, FL 33141-4246

2332090170340

ROGER CORN SR &W PAULA
1800 79TH STREET CSWY APT A310
MIAMI BEACH, FL 33141-4246

2332090170350

FEDERICO ZAMORA
1800 79TH STREET CSWY APT A311
MIAMI BEACH, FL 33141-4246

2332090170360

CHRISTIAN R FLORES &H
PAOLA A VALENZUELA
1800 79TH STREET CSWY APT A312
MIAMI BEACH, FL 33141-4246

2332090180001

REFERENCE ONLY
NO BAY WHITE HOUSE CONDO NO 2

2332090180010

MIRELYS MARTINEZ
1790 79TH STREET CSWY APT B102
MIAMI BEACH, FL 33141-4205

2332090180020

YEMFER SOTOLONGO &W LUISA
1790 79 CAUSEWAY #B103
NORTH BAY VILLAGE, FL 33141-4205

2332090180030

BLANCA E PAZ &
NIDIA E REYES JTRS
1790 79TH STREET CSWY APT B104
MIAMI BEACH, FL 33141-4205

2332090180040

MARIA F & LILY GAITAN JTRS
1790 79TH STREET CSWY APT B105
MIAMI BEACH, FL 33141-4205

2332090180050

ROSA M & NIEVES C &
MARTI RODRIQUEZ
1790 79TH STREET CSWY # B
MIAMI BEACH, FL 33141-4200

2332090180060

SANDRA LOPEZ
JAVIER MORERA
1790 79TH STREET CSWY APT B107
MIAMI BEACH, FL 33141-4205

2332090180070

JAVIER MORERA
3801 NE 170TH ST # A
NORTH MIAMI BEACH, FL 33160-3169

2332090180080

JORGE J PORTO
1790 79TH STREET CSWY APT B109
MIAMI BEACH, FL 33141-4206

2332090180090

STACY GERMAIN
1790 79TH STREET CSWY APT B110
MIAMI BEACH, FL 33141-4206

2332090180100

KEVIN BALBOA
1790 79TH STREET CSWY APT B111
MIAMI BEACH, FL 33141-4206

2332090180110

NOLVIA F HOWARD
1790 79TH STREET CSWY APT B112
MIAMI BEACH, FL 33141-4206

2332090180120

BARRY & WALTER FRIEDOPFER
1790 79TH STREET CSWY STE B
MIAMI BEACH, FL 33141-4200

2332090180130

J DAVIS MORRISON (JR)
1510 S TREASURE DR
MIAMI BEACH, FL 33141-4127

2332090180140

JOSE R PINTO
1790 79TH STREET CSWY APT B203
MIAMI BEACH, FL 33141-4243

2332090180150

SASO GEGOVSKI
1790 79TH STREET CSWY APT B204
MIAMI BEACH, FL 33141-4243

2332090180160

SHULIKA ALONZO
1790 KENNEDY CAUSEWAY #B205
NORTH BAY VILLAGE, FL 33141-0000

2332090180170

PABLO EGGLE
1790 79TH STREET CSWY APT B206
MIAMI BEACH, FL 33141-4243

2332090180180

IRENE PINO
1790 79TH STREET CSWY APT B207
MIAMI BEACH, FL 33141-4243

2332090180190

CLAUDIA L SASTRE
1790 79TH STREET CSWY APT B208
MIAMI BEACH, FL 33141-4244

2332090180200

JUANA PEREZ
1790 79TH STREET CSWY APT B209
MIAMI BEACH, FL 33141-4244

2332090180210

CARLOS G TERAN
1790 79TH STREET CSWY APT B210
MIAMI BEACH, FL 33141-4244

2332090180220

DIANA M MENDEZ
1790 79TH STREET CSWY APT B211
MIAMI BEACH, FL 33141-4268

2332090180230

OSVALDO RIVERON
1790 79TH STREET CSWY APT B212
MIAMI BEACH, FL 33141-4244

2332090180240

ALEJANDRA COSSIO
10401 SW 32ND ST
MIAMI, FL 33165-2756

2332090180250

ANGELA HERNANDEZ
1790 79TH STREET CSWY UNIT B
MIAMI BEACH, FL 33141-4200

2332090180260

ELINOR HARRIS
1790 79TH STREET CSWY APT B303
MIAMI BEACH, FL 33141-4227

2332090180270

MAGALYS AMORES
1790 79TH STREET CSWY APT B304
MIAMI BEACH, FL 33141-4227

2332090180280

MODESTO PEREZ
GISELA PEREZ
1790 79TH STREET CSWY APT B305
MIAMI BEACH, FL 33141-4227

2332090180290

MARIA E OCAMPO
1790 79TH STREET CSWY APT B306
MIAMI BEACH, FL 33141-4227

2332090180300

CARMEN ALICIA PINTO
1790 79TH STREET CSWY APT B307
MIAMI BEACH, FL 33141-4227

2332090180310

MATTHEW G DYMOND &W ANASTASIYA
1790 79TH STREET CSWY APT B308
MIAMI BEACH, FL 33141-4245

2332090180320

LOIS I KEENE EST OF
1790 79TH STREET CSWY # B
MIAMI BEACH, FL 33141-4200

2332090180330

ARTILIA MARTORELL
1790 79TH STREET CSWY # B
MIAMI BEACH, FL 33141-4200

2332090180340

DORA C PEREZ
15606 SW 63RD TER
MIAMI, FL 33193-2802

2332090180350

OSCAR J PEREZ &W
YADIRA DEL S ESPINOZA
1790 79TH STREET CSWY APT B312
MIAMI BEACH, FL 33141-4245

2332090190001

REFERENCE ONLY
NO BAY WHITE HOUSE NO 3 CONDO

2332090190010

MARIA PATRICIA OLIVARES
1780 79TH STREET CSWY # C101
MIAMI BEACH, FL 33141-4241

2332090190020

MARIA PATRICIA OLIVARES
1780 79 ST CSWAY APT C102
NO BAY VILLAGE, FL 33141

2332090190030

JUAN C PEREZ
1568 NORMANDY DR
MIAMI BEACH, FL 33141-4702

2332090190040

LUIS TAPANES
1833 S OCEAN DR APT 405
HALLANDALE, FL 33009-4904

2332090190050

MARIA E BENAGLIA
1780 79TH STREET CSWY # C105
MIAMI BEACH, FL 33141-4241

2332090190060

JOSEPH GRECO
1780 79TH STREET CSWY # C106
MIAMI BEACH, FL 33141-4241

2332090190070

CHRISTIAN GO
8806 SW 221ST TER
MIAMI, FL 33190-1297

2332090190080

EUGENIO S LOPEZ
1780 79TH STREET CSWY # C108
MIAMI BEACH, FL 33141-4241

2332090190090

MARTIN BIANCOTTI
1780 79TH STREET CSWY # C109
MIAMI BEACH, FL 33141-4241

2332090190100

SCHUNKIN MA
1780 79TH STREET CSWY # C110
MIAMI BEACH, FL 33141-4241

2332090190110

VINCENT GARGIULO
1780 79TH STREET CSWY # C111
MIAMI BEACH, FL 33141-4241

2332090190120

GERARDO ALVAREZ &W PAULA &
RAFAEL ALVAREZ
2930 POINT EAST DR APT E505
NORTH MIAMI BEACH, FL 33160-2685

2332090190130

SIDNEY J & BARBARA L FELLMAN
5875 DOUGLAS ST
PITTSBURGH, PA 15217-2101

2332090190140

RAFAEL CISNEROS
1780 79TH STREET CSWY # C201
MIAMI BEACH, FL 33141-4241

2332090190150

JENNY CISNEROS
1770 79TH STREET CSWY # D
MIAMI BEACH, FL 33141-4240

2332090190160

ANNE BREGMAN TRUST
ANNE BREGMAN (BEN)
1780 79TH STREET CSWY # C
MIAMI BEACH, FL 33141-4241

2332090190170

ARNALDO GALLARDO &W MYRIAM N
11032 SW 143RD CT
MIAMI, FL 33186-7005

2332090190180

JOAQUIN VIRUE &W ROSA M
428 NE 90TH ST
MIAMI, FL 33138-3147

2332090190190

ANDRES TERAN
1780 79TH STREET CSWY # C206
MIAMI BEACH, FL 33141-4241

2332090190200

JOSEPH M GRECO
1780 79 CSWY #C 207
MIAMI BEACH, FL 33144-4241

2332090190210

EVANGELINA BALMORI
120 CONFEDERATE AVE
DANVILLE, VA 24541-3202

2332090190220

MARTHA BOLIVAR
1780 79TH STREET CSWY # C209
MIAMI BEACH, FL 33141-4241

2332090190230

MAELS RODRIGUEZ CORRALES &W
MAGELA MONTOYA
1780 79TH STREET CSWY # C210
MIAMI BEACH, FL 33141-4241

2332090190240

JUAN M MARTINEZ &W ANA E
1037 WINTER SPRINGS BLVD
WINTER SPRINGS, FL 32708-4042

2332090190250

ALEX SCHRODER
133 NE 2ND AVE APT 1901
MIAMI, FL 33132-2914

2332090190260

WILLIAM GARCIA
LUZ M TORRES
1780 79TH STREET CSWY # C214
MIAMI BEACH, FL 33141-4241

2332090190270

STEPHAN NANDELSTADT &W DEUSELENA
1780 79TH STREET CSWY APT C
MIAMI BEACH, FL 33141-4241

2332090190280

FABIO E TORES
1780 79TH STREET CSWY # C302
MIAMI BEACH, FL 33141-4241

2332090190290

PEDRO FINALES &W LUZ E
1815 OPA LOCKA BLVD
OPA LOCKA, FL 33054-4223

2332090190300

ROSENDO & AIDA ALVAREZ
1780 79TH STREET CSWY # C304
MIAMI BEACH, FL 33141-4241

2332090190310

GERARDO ALVAREZ &W PAULA LE
REM RAFAEL ALVAREZ
2930 POINT EAST DR APT E505
NORTH MIAMI BEACH, FL 33160-2685

2332090190320

CARLOS A RIVERO
1780 79TH STREET CSWY # C306
MIAMI BEACH, FL 33141-4241

2332090190330

PABLO F VARELA
1780 79TH STREET CSWY # C
MIAMI BEACH, FL 33141-4241

2332090190340

CONCEPCION CUESTA 1
655 E 45TH ST
HIALEAH, FL 33013-1921

2332090190350

OSCAR PALOMO
1880 S TREASURE DR APT 1P
MIAMI BEACH, FL 33141-4312

2332090190360

KENNETH PEREZ
35 EDGEWATER DR APT 103
MIAMI, FL 33133-6927

2332090190370

MERCEDES GONZALEZ
PO BOX 4105
WEST NEW YORK, NJ 07093-8105

2332090190380

MERCEDES OCTAVIANA FUENTES
1780 79TH STREET CSWY # C312
MIAMI BEACH, FL 33141-4241

2332090190390

CELIA MARGOLIS LE
REM JOEL BARRY MARGOLIS
1780 79TH STREET CSWY BLDG C # 314
MIAMI BEACH, FL 33141-4241

2332090200001

REFERENCE ONLY
NO BAY WHITE HOUSE NO 4 CONDO

.

2332090200010

IVAN MORALES &W DAYAMI
1770 79 ST CSWAY APT D101
MIAMI, FL 33141

2332090200020

ANA TEJEIRO
NELSON TEJEIRO
1770 79TH STREET CSWY # D
MIAMI BEACH, FL 33141-4240

2332090200030

JEFFREY A KATZ
21500 HALBURTON RD
BEACHWOOD, OH 44122-3919

2332090200040

MINNIE M KAPLAN TR &
CHARLES KAPLAN
1770 79TH STREET CSWY # D104
MIAMI BEACH, FL 33141-4240

2332090200050

FABIO PINEDA
MARTHA BOLIVAR
1770 79TH STREET CSWY UNIT D105
MIAMI BEACH, FL 33141-4240

2332090200060

EDWARD PALACIOS &W ZOILA
415 NE 2ND ST APT 220
HALLANDALE, FL 33009-4365

2332090200070

SONIA SOLANO
1770 79TH STREET CSWY UNIT D
MIAMI BEACH, FL 33141-4240

2332090200080

DANIEL BASTACKY
3607 HERSHEY LN
TUCKER, GA 30084-2308

2332090200090

MANUEL LOPEZ &W
MARIA I LEACH
1770 79TH STREET CSWY # D109
MIAMI BEACH, FL 33141-4240

2332090200100

RITA C KALIL
8225 NW 13TH ST
FORT LAUDERDALE, FL 33322-4612

2332090200110

FRANCISCO J ALTUNA
1770 79TH STREET CSWY # D111
MIAMI BEACH, FL 33141-4240

.

2332090200120

AGUSTIN S CEBALLOS
717 W 36TH ST
HIALEAH, FL 33012-5137

2332090200130

ANA C ELIZONDO
1770 79TH STREET CSWY # D114
MIAMI BEACH, FL 33141-4240

2332090200140

ROSA CAMACHO
MARILYN CAMACHO
1770 79TH STREET CSWY # D115
MIAMI BEACH, FL 33141-4240

2332090200150

CARMEN A NARANJO LE
REM LUIS NARANJO
1770 79TH STREET CSWY # D201
MIAMI BEACH, FL 33141-4240

2332090200160

GLENN S & VIOLET SAMBERG
1770 79TH STREET CSWY # D202
MIAMI BEACH, FL 33141-4240

2332090200170

ESTHER COLON
CHRISTOPHER CRESPO
6855 CASSIA PL
HIALEAH, FL 33014-2615

2332090200180

TANIA M ROMERO
1770 79TH STREET CSWY # D204
MIAMI BEACH, FL 33141-4240

2332090200190

THE JOHN DANILOSKY TRUST
1770 79TH STREET CSWY # D205
MIAMI BEACH, FL 33141-4240

2332090200200

ARMAND ABECASSIS
7508 W TREASURE DR
MIAMI BEACH, FL 33141-4118

.

2332090200210

ALLSTATE MTG SOLUTIONS INC
8000 EAST DR APT 304
MIAMI BEACH, FL 33141-4162

2332090200220

MAXIMO VALDES &W MAYRA J
1770 79TH STREET CSWY # D208
MIAMI BEACH, FL 33141-4240

2332090200230

REBECA DIAZ
1770 79TH STREET CSWY # D209
MIAMI BEACH, FL 33141-4240

2332090200240

ROBLES FAMILY MGMT CO LLC
15575 NW 12TH PL
HOLLYWOOD, FL 33028-1617

2332090200250

GERARDO ALVAREZ &W PAULA LE
REM RAFAEL ALVAREZ
2930 POINT EAST DR APT E505
NORTH MIAMI BEACH, FL 33160-2685

2332090200260

YAMINA JORRIN
1770 79TH STREET CSWY # D212
MIAMI BEACH, FL 33141-4240

2332090200270

ROXANA VARELA
1770 79TH STREET CSWY # D214
MIAMI BEACH, FL 33141-4240

.

2332090200280

AMPARITO VARGAS &
JULIO C PERALTA JTRS
1770 79TH STREET CSWY # D215
MIAMI BEACH, FL 33141-4240

2332090200290

PEDRO GIL &
MARGARITA M PEREZ
1770 79TH STREET CSWY # D301
MIAMI BEACH, FL 33141-4240

2332090200300

ANNIA DE JESUS COBO
PO BOX 414924
MIAMI BEACH, FL 33141-0924

2332090200310

EDILENE SILLER
1770 79TH STREET CSWY # D303
MIAMI BEACH, FL 33141-4240

2332090200320

HESSIE M PITTERS
1770 79TH STREET CSWY UNIT D304
MIAMI BEACH, FL 33141-4240

2332090200330

JENNY RONDON
1770 79TH STREET CSWY # D305
MIAMI BEACH, FL 33141-4240

2332090200340

SHELDON SCHAEFFER
IRIS GREENE
THE IRIS GREENE REVOC LIV TR
1770 79 CAUSEWAY D306
NORTH BAY VILLAGE, FL 33141

2332090200350

MILAGROS M ROCA
1770 79TH STREET CSWY # D307
MIAMI BEACH, FL 33141-4240

2332090200360

HECTOR R ORMENO
1519 40TH ST
NORTH BERGEN, NJ 07047-2524

2332090200370

JULIO CESAR PEREZ
1770 79TH STREET CSWY # D309
MIAMI BEACH, FL 33141-4240

2332090200380

ARMAND ABECASSIS
7508 W TREASURE DR
MIAMI BEACH, FL 33141-4118

2332090200390

LEONARDO DAVID SCHIAFFINO
1770 79TH STREET CSWY # D311
MIAMI BEACH, FL 33141-4240

2332090200400

LUCIA ALVAREZ LE
REM ARNALDO & GERARDO ALVAREZ JR
1770 79 ST CSWAY APT D312
NO BAY VILLAGE, FL 33141

2332090200410

GERTRUDE ROMM TRS
GERTRUDE ROMM (BEN)
1770 79TH STREET CSWY # D314
MIAMI BEACH, FL 33141-4240

2332090200420

VANIA PEREZ
1770 79TH STREET CSWY # D315
MIAMI BEACH, FL 33141-4240

2332090250001

REFERENCE ONLY
KENNEDY HOUSE CONDO

2332090250020

VANESSA GRAULICH &H PETER
2750 OCEAN SHORE BLVD APT 50
ORMOND BEACH, FL 32176-2369

2332090250030

MARTHA MADERAL
738 CAMILO AVE
MIAMI, FL 33134-7008

2332090250040

CHARLES COTTER
KIMBERLEY COTTER
1865 79TH STREET CSWY # LI
MIAMI BEACH, FL 33141-4238

2332090250050

MIKE RUIZ &W ESPERANZA
1865 79TH STREET CSWY APT 1L
MIAMI BEACH, FL 33141-4209

2332090250060

LUNMEY REYES
1865 79TH STREET CSWY APT 1N
MIAMI BEACH, FL 33141-4209

2332090250070

DESMOND GORMAN
342 W 56TH ST APT 2A
NEW YORK, NY 10019-4263

2332090250080

RAFAELL F CABRERA
1865 79TH STREET CSWY APT 2B
MIAMI BEACH, FL 33141-4209

2332090250090

NELLY S & JENNY CORTES
12600 COUNTRY CLUB LN
MIAMI, FL 33167-1817

2332090250100

INGRID CAICEDO
21682 CYPRESS RD APT 11F
BOCA RATON, FL 33433-3233

2332090250110

NEVI A DE GONZALEZ
801 BRICKELL KEY BLVD APT 3110
MIAMI, FL 33131-3723

2332090250120

MARIO AVERHOFF
1865 79TH STREET CSWY APT 2F
MIAMI BEACH, FL 33141-4209

2332090250130

MARIO AVERHOFF &W
SANDRA SIMIONI
741 NE 71ST ST
MIAMI, FL 33138-5717

2332090250140

SIGRID NILSSEN
1865 79TH STREET CSWY APT 2H
MIAMI BEACH, FL 33141-4209

2332090250150

EVELYN TIEDEMANN
369 MAHOGANY DR
KEY LARGO, FL 33037-4562

2332090250160

KEVIN ARN
1865 79TH STREET CSWY APT 2J
MIAMI BEACH, FL 33141-4209

2332090250170

CELIA GONZALEZ &
SHARON WAKULICH
1865 KENNEDY CSWAY APT 2K
NO BAY VILLAGE, FL 33141

2332090250180

CLAUDIO MAGANI
RAQUEL C TEMPO DEMAGANI
1865 79TH STREET CSWY APT 2L
MIAMI BEACH, FL 33141-4209

2332090250190

ISRAEL & ESTER SANTA MARIA
1865 79TH STREET CSWY APT 2M
MIAMI BEACH, FL 33141-4209

2332090250200

GAIL M SOLIS
110 SEAVER CIR
BRIDGEPORT, CT 06606-1224

2332090250210

ALBERTO TAICH &W EDITH
1865 79TH STREET CSWY # 2
MIAMI BEACH, FL 33141-4238

2332090250220

VICTOR M VARGAS
1865 79TH STREET CSWY APT 3A
MIAMI BEACH, FL 33141-4209

2332090250230

STEVEN JEFFREY GISH
1245 HAWTHORNE DR E
WANTAGH, NY 11793-2658

2332090250240

ERNESTO FERNANDEZ &W TERESA
17012 NW 19TH ST
HOLLYWOOD, FL 33028-2034

2332090250250

ALEXEY SEMIBRATOV
1865 79TH STREET CSWY APT 3D
MIAMI BEACH, FL 33141-4259

2332090250260

DEUTSCHE BNK TR CO
AMERICAS TRS
1270 NORTHLAND DR STE 200
SAINT PAUL, MN 55120-1176

2332090250270

MARIA E HOYOS
11276 SW 160TH CT
MIAMI, FL 33196-4265

2332090250280

MIGUEL VALDEZ &
IDA E ACANDA
1865 79TH STREET CSWY APT 3G
MIAMI BEACH, FL 33141-4209

2332090250290

MELISSA DEVOLENTINE
1865 KENNEDY CSWY APT 3H
MIAMI BEACH, FL 33141-4209

2332090250300

ESTELLA PUENTES
1865 79TH STREET CSWY APT 3I
MIAMI BEACH, FL 33141-4209

2332090250310

DEMETRIO L AVILA &W URSULA
% COLONIAL BANK
PO BOX 310367
MIAMI, FL 33231-0367

2332090250320

PAUL ALFONSO &W MONIQUE
1321 DAYTONIA RD
MIAMI BEACH, FL 33141-1726

2332090250330

DEMETRIO AVILA &W URSULA
% COLONIAL BANK
PO BOX 310367
MIAMI, FL 33231-0367

2332090250340

SILVANA X MONTI
1865 79TH STREET CSWY APT 3M
MIAMI BEACH, FL 33141-4212

2332090250350

PATRICIA TANNHAUSER
1865 79TH STREET CSWY APT 3N
MIAMI BEACH, FL 33141-4212

2332090250360

KENNEDY ON THE BAY LLC
1865 79 STREET CAUSEWAY UNIIT 3 0
NORTH BAY VILLAGE, FL 33141

2332090250370

FRANZ P TARAFA
1865 79TH STREET CSWY APT 4A
MIAMI BEACH, FL 33141-4212

2332090250380

THAIS CROSARA
1865 79TH STREET CSWY APT 4B
MIAMI BEACH, FL 33141-4212

2332090250390

MIGUEL FORNELLA
1865 79TH STREET CSWY APT 4C
MIAMI BEACH, FL 33141-4212

2332090250400

OLGA & RICARDO ARCETTI JTRS
1865 79TH STREET CSWY APT 4D
MIAMI BEACH, FL 33141-4212

2332090250410

SAMUEL GONZALEZ
PO BOX 830304
MIAMI, FL 33283-0304

2332090250420

JOSELY BARRIAL
1865 79TH STREET CSWY APT 4F
MIAMI BEACH, FL 33141-4212

2332090250430

CARLOS VAZQUEZ &
OSMEL PANDO
780 N SHORE DR
MIAMI BEACH, FL 33141-2436

2332090250440

FRANCISCO ALMEIDA &W
MARIA F ALMEIDA
1865 79TH STREET CSWY APT 4H
MIAMI BEACH, FL 33141-4212

2332090250450

JOSEPH MINORE
9072 CARLYLE AVE
MIAMI BEACH, FL 33154-3240

2332090250460

FLAVIO LAURENT &
DIANA HOYOS
1865 79TH STREET CSWY APT 4J
MIAMI BEACH, FL 33141-4212

2332090250470

LISA YOUNG &H
STEPHEN SEECHARAN
1865 79TH STREET CSWY APT 4K
MIAMI BEACH, FL 33141-4212

2332090250480

ROSA WUGEN (LE)
REM SILVIA CAYRUS
1865 79TH STREET CSWY APT 4L
MIAMI BEACH, FL 33141-4212

2332090250490

JOSE VALVERDE &W
MYRA ALEIDA GREGORIO
1865 79TH STREET CSWY APT 4M
MIAMI BEACH, FL 33141-4212

2332090250500

NICOLAS QUIJANO
1865 79TH STREET CSWY APT 5L
MIAMI BEACH, FL 33141-4210

2332090250510

LUCIA CASTRO
1865 79TH STREET CSWY # 4
MIAMI BEACH, FL 33141-4238

2332090250520

JULIO LLONA &
MARIA E BENAGLIA
1865 79TH STREET CSWY APT 5A
MIAMI BEACH, FL 33141-4212

2332090250530

JORGE L BRITO
1865 79TH STREET CSWY APT 5B
MIAMI BEACH, FL 33141-4262

2332090250540

HECTOR TORRES
1865 79TH STREET CSWY APT 5C
MIAMI BEACH, FL 33141-4262

2332090250550

MARION & MONICA WOOD
PO BOX 128
MENDHAM, NJ 07945-0128

2332090250560

SONIA KITAIGOROD
1865 79TH STREET CSWY # 5
MIAMI BEACH, FL 33141-4238

2332090250570

ROGER ROJAS
644 ENFIELD CT
DELRAY BEACH, FL 33444-1749

2332090250580

KATHLEEN M PERESMAN
9044 HARGIS ST
LOS ANGELES, CA 90034-1927

2332090250590

IGNACIO DIAZ &W
THERESA DIAZ
1865 79TH STREET CSWY
MIAMI BEACH, FL 33141-4238

2332090250600

KENNEDY HOUSE CONDO HOLDINGS LLC
5121 SW 87TH AVE
MIAMI, FL 33165-6732

2332090250610

GLADYS LOPEZ TRIGO
1865 79TH STREET CSWY APT 8G
MIAMI BEACH, FL 33141-4211

2332090250620

DIANA FRANCO
1865 79TH STREET CSWY APT 5K
MIAMI BEACH, FL 33141-4210

2332090250630

MICHEL CARO
1865 79TH STREET CSWY APT 5L
MIAMI BEACH, FL 33141-4210

2332090250640

ULISES CASTILLO
1865 KENNEDY CSWY APT 5M
MIAMI BEACH, FL 33141-4210

2332090250650

JOHANNY FERRIERA &
RUBEN RABINO
1865 79TH STREET CSWY APT 5N
MIAMI BEACH, FL 33141-4210

2332090250660

MARY C STUART &
BRENDA R DIAZ
1865 79TH STREET CSWY APT 5O
MIAMI BEACH, FL 33141-4210

2332090250670

JOEL HOLTZMAN
1865 79TH STREET CSWY APT 6A
MIAMI BEACH, FL 33141-4210

2332090250680

MARTHA R FIGUEREDO &
CHRISTINA M BARRETT
1650 NE 115TH ST APT 202
MIAMI, FL 33181-3100

2332090250690

KATIE B KLEIN LE
REM JEFFREY HIMMELSTEIN
REM SHARON WEINER
1865 79TH STREET CSWY APT 6C
MIAMI BEACH, FL 33141-4210

2332090250700

ADRIAN COSTAS
1865 79TH STREET CSWY APT 6D
MIAMI BEACH, FL 33141-4210

2332090250710

MARGARITA C BURSTEIN &
BERNARDO & EVA MARIA BURSTEIN
1865 79TH STREET CSWY APT 6E
MIAMI BEACH, FL 33141-4210

2332090250720

JOSEPH KRAUS &W MARIA V
1865 79TH STREET CSWY APT 6F
MIAMI BEACH, FL 33141-4210

2332090250730

ÈRIN MOHRES
1865 79TH STREET CSWY APT 6G
MIAMI BEACH, FL 33141-4210

2332090250740

MARIA ROBBINS
1865 79TH STREET CSWY APT 6H
MIAMI BEACH, FL 33141-4210

2332090250750

EVELIO HORTA JR
1865 79TH STREET CSWY APT 6I
MIAMI BEACH, FL 33141-4210

2332090250760

MICHAEL HOWELLS
1865 79TH STREET CSWY APT 6J
MIAMI BEACH, FL 33141-4210

2332090250770

EDMUND SWEENEY
746 S ORLANDO AVE APT 608
COCOA BEACH, FL 32931-4427

2332090250780

ALEJANDRO SOSA
11271 SW 157TH CT
MIAMI, FL 33196-3126

2332090250790

YEHOSHUA GAHFI &H HADAR
1865 79TH STREET CSWY APT 6M
MIAMI BEACH, FL 33141-4210

2332090250800

MARIA EUGENIA SUMTER
1865 79TH STREET CSWY APT 6N
MIAMI BEACH, FL 33141-4210

2332090250810

LETICIA IBARRA
1865 79TH STREET CSWY APT 6O
MIAMI BEACH, FL 33141-4210

2332090250820

DENNIS KATSOULIS
3301 NE 1ST AVE # H2615
MIAMI, FL 33137-4106

2332090250830

MARIA C VAZQUEZ
1742 SW 102ND PL
MIAMI, FL 33165-7432

2332090250840

RACHEL E CHAVEZ
1865 79TH STREET CSWY APT 7C
MIAMI BEACH, FL 33141-4260

2332090250850

ANNA BAKST
1865 79 ST CSWAY UNIT 7D
NO BAY VILLAGE, FL 33141-4210

2332090250860

MERCEDES OTEIZA
1865 79TH STREET CSWY APT 7E
MIAMI BEACH, FL 33141-4260

2332090250870

RUSSELL WARREN
13 HIGHWOOD RIDGE TRL
ORMOND BEACH, FL 32174-2412

2332090250880

CECILIA PINEL
1865 79TH STREET CSWY APT 7G
MIAMI BEACH, FL 33141-4211

2332090250890

DAVID PANIAGUA &W ELIZABETH
1865 79TH STREET CSWY APT 7H
MIAMI BEACH, FL 33141-4211

2332090250900

SHAYNE TESCONI
1865 79TH STREET CSWY # 7
MIAMI BEACH, FL 33141-4238

2332090250910

SILVIA DUARTE
1865 79TH STREET CSWY APT 7J
MIAMI BEACH, FL 33141-4211

2332090250920

MARTHA L VELEZ &
JUDY MARTINEZ JTRS
1865 79TH STREET CSWY APT 7K
MIAMI BEACH, FL 33141-4211

2332090250930

ADRIANA M HURTADO &
OLGA LAMERAN
1865 79TH STREET CSWY APT 7L
MIAMI BEACH, FL 33141-4211

2332090250940

EVA EXPOSITO
1865 79TH STREET CSWY APT 7M
MIAMI BEACH, FL 33141-4211

2332090250950

ROBERT B MCBRIDE IV &W ODETTE
1865 79TH STREET CSWY # 7
MIAMI BEACH, FL 33141-4238

2332090250960

ANTONIO FERNANDEZ
1865 79TH STREET CSWY APT 7O
MIAMI BEACH, FL 33141-4211

2332090250970

MAISIE MARGUILES LE
REM DAVID DARCEY &W JANICE
12619 SHOAL CREEK TER
BELTSVILLE, MD 20705-1080

2332090250980

VIRGINIA CASTILLO
1865 79TH STREET CSWY APT 8B
MIAMI BEACH, FL 33141-4211

2332090250990

GISELA MARGOLIS &
MARCO SIERVO JTRS
1865 79TH STREET CSWY APT 8C
MIAMI BEACH, FL 33141-4211

2332090251000

LOURDES Z MENESES
YOLANDA MENESES
105 SW 96TH CT # A
MIAMI, FL 33174-2000

2332090251010

RUSSEL WARREN &W LUCIENE
13 HIGHWOOD RIDGE TRL
ORMOND BEACH, FL 32174-2412

2332090251020

LILIANA ILLESCAS
14900 SW 43RD ST
MIAMI, FL 33185-4381

2332090251030

ZAKI TAMIR &W
AVIGAIL MEREL
1553 UNION ST APT 4
BROOKLYN, NY 11213-4578

2332090251040

ANA C CHAVEZ
JORGE L BRITO
1865 79TH STREET CSWY APT 8H
MIAMI BEACH, FL 33141-4211

2332090251050

NANCY RIVERO
1865 79TH STREET CSWY
MIAMI BEACH, FL 33141-4238

2332090251060

FRANK DIAZ
1865 79TH STREET CSWY APT 8J
MIAMI BEACH, FL 33141-4211

2332090251070

MARIA C BUTLER
20100 W COUNTRY CLUB DR APT PH1
MIAMI, FL 33180-1672

2332090251080

SOUTH FORK DEV LLC
8927 HAWTHORNE AVE
MIAMI BEACH, FL 33154-3331

2332090251090

JOHANE S JEAN
1865 79TH STREET CSWY APT 8M
MIAMI BEACH, FL 33141-4211

2332090251100

JUDITH BISHOP TR
7330 OCEAN TER APT 502
MIAMI BEACH, FL 33141-2723

2332090251110

WELLS FARGO BANK NA TRS
1610 E SAINT ANDREW PL # B150
SANTA ANA, CA 92705-4931

2332090251120

JUAN R HERNANDEZ
10015 NW 6TH TER
MIAMI, FL 33172-4028

2332090251130

RENATO JIMENEZ
1865 79TH STREET CSWY APT 9B
MIAMI BEACH, FL 33141-4261

2332090251140

MILADY SARRIA
1865 79TH STREET CSWY APT 9C
MIAMI BEACH, FL 33141-4261

2332090251150

CELIA BLEVIT TR
1865 79TH STREET CSWY APT 9D
MIAMI BEACH, FL 33141-4261

2332090251160

CLARA R DE LA FE
1865 79TH STREET CSWY APT 9E
MIAMI BEACH, FL 33141-4223

2332090251170

DORA CHRISTINA IZQUIERDO &
LIDIA R SANCHEZ JTRS
1865 79TH STREET CSWY APT 9F
MIAMI BEACH, FL 33141-4223

2332090251180

MIHRAN R NALBANDIAN &W
NATALIE LEVKOVICH
228 LOMBARD ST
PHILADELPHIA, PA 19147-1605

2332090251190

ENRIQUE DAPIAGGI
1865 79TH STREET CSWY APT 9H
MIAMI BEACH, FL 33141-4223

2332090251200

IRENE PINES
1865 79TH STREET CSWY APT 9I
MIAMI BEACH, FL 33141-4223

2332090251210

ERNESTO FERNANDEZ
TERESA S FERNANDEZ
1865 79TH STREET CSWY APT 9J
MIAMI BEACH, FL 33141-4223

2332090251220

SANDY HARK &W BRENDA K
1640 BAY DR
MIAMI BEACH, FL 33141-4718

2332090251230

PATRICIA J FIGUEREDO
1865 79TH STREET CSWY APT 9L
MIAMI BEACH, FL 33141-4223

2332090251240

GILBERTO SANCHEZ &W BEATRIZ
1865 79TH STREET CSWY APT 9M
MIAMI BEACH, FL 33141-4223

2332090251250

HANIKA GARCIA
1865 79TH STREET CSWY APT 9N
MIAMI BEACH, FL 33141-4223

2332090251260

ROXANNE R AWANG
1865 79TH CSWY #9 O
NORTH BAY VILLAGE, FL 33141

2332090251270

BAILA ARONOVSKI
1865 79TH STREET CSWY APT 10A
MIAMI BEACH, FL 33141-4223

2332090251280

ALTAGRACIA MUNOZ &H ORLANDO
1865 79TH STREET CSWY APT 10B
MIAMI BEACH, FL 33141-4223

2332090251290

SANDY HARK &W BRENDA
% SANDY HARK BOILER SALES
1640 BAY DR
MIAMI BEACH, FL 33141-4718

2332090251300

JUDITH A LANDIS
1875 KENNEDY CAUSEWAY #10 D
N BAY VILLAGE, FL 33141

2332090251310

CARLOS OMES
1865 79 ST CSWAY #10 E
NORTH BAY VILLAGE, FL 33141

2332090251320

MARIA C REYES &
TOMAS DELGADO
1865 79TH STREET CSWY APT 10F
MIAMI BEACH, FL 33141-4223

2332090251330

ULISES CASTILLO
1865 79TH STREET CSWY APT 10G
MIAMI BEACH, FL 33141-4223

2332090251340

ORHAN K SENGUN &W KAMILE
1865 79TH STREET CSWY APT 10H
MIAMI BEACH, FL 33141-4223

2332090251350

ANDREA ASSANTES &
ROBERT S ASSANTES &W MARY C
1865 79TH STREET CSWY APT 10I
MIAMI BEACH, FL 33141-4223

2332090251360

MARIA GABRIELA VECCO
5750 COLLINS AVE APT 4B
MIAMI BEACH, FL 33140-2316

2332090251370

MARTHA & ALBERTO BABOT
1865 79TH STREET CSWY APT 10K
MIAMI BEACH, FL 33141-4223

2332090251380

ANA E DIAZ
1865 79TH STREET CSWY APT 10L
MIAMI BEACH, FL 33141-4223

2332090251390

NATHALIE F DEMESMIN
1865 79TH STREET CSWY APT 10M
MIAMI BEACH, FL 33141-4223

2332090251400

MONICA WOOD
1865 79TH STREET CSWY APT 10N
MIAMI BEACH, FL 33141-4223

2332090251410

EDDIE S LEAVE &W MASHA
1865 79 ST CAUSEWAY U 10 O
MIAMI BEACH, FL 33141-4238

2332090251420

GERMANA MANZOTTI
1865 79TH STREET CSWY APT 11A
MIAMI BEACH, FL 33141-4264

2332090251430

HECTOR H GIOVANNA
11111 BISCAYNE BLVD # 6B
MIAMI, FL 33181-3404

2332090251440

SERGIO ANDRICAIN &
ANTONIO RODRIGUEZ
2612 SW 120TH AVE
MIAMI, FL 33175-2306

2332090251450

EULALIA ESCORCIA
1865 79TH STREET CSWY APT 11D
MIAMI BEACH, FL 33141-4224

2332090251460

OMAR GUTIERREZ
1865 79TH STREET CSWY APT 11E
MIAMI BEACH, FL 33141-4224

2332090251470

SHORES HEALTH CARE LLC
8900 NE 1ST AVE
MIAMI, FL 33138-3026

2332090251480

MICHAEL RYAN &W
KAREN RUMBERG
10 W 15TH ST APT 1114
NEW YORK, NY 10011-6825

2332090251490

ROBERTO LASERIA
1865 79TH STREET CSWY APT 11H
MIAMI BEACH, FL 33141-4224

2332090251500

DELIA ABASCAL &
MERCEDES QUIROGA
1865 79TH STREET CSWY APT 11I
MIAMI BEACH, FL 33141-4224

2332090251510

VINCENT DEFAUWES
1865 79TH STREET CSWY APT 11J
MIAMI BEACH, FL 33141-4224

2332090251520

SERGIO GONZALEZ
ANASTASIA BAUDONE
1865 79TH STREET CSWY APT 11K
MIAMI BEACH, FL 33141-4224

2332090251530

DIANA ABUJASEN
1865 79TH STREET CSWY APT 11L
MIAMI BEACH, FL 33141-4224

2332090251540

ROMERO CARDINALE &W CARMEN AIDA
1865 79TH STREET CSWY APT 11M
MIAMI BEACH, FL 33141-4224

2332090251550

JASMIN A HOSSAIN
6355 ALLISON RD
MIAMI BEACH, FL 33141-4505

2332090251560

LOUIS TRACH
MARK TRACH
JEAN TRACH
1865 79TH STREET CSWY APT 11O
MIAMI BEACH, FL 33141-4224

2332090251570

RAQUEL RESTREPO
1865 79TH STREET CSWY APT 12A
MIAMI BEACH, FL 33141-4224

2332090251580

DODANIM IRIARTE
1865 79TH STREET CSWY APT 12B
MIAMI BEACH, FL 33141-4224

2332090251590

JNC RLTY 79TH ST CAUSEWAY LLC
4931 CYPRESS WAY
POMPANO BEACH, FL 33073-4907

2332090251600

TIMOTHY W MORRIS
1865 79TH STREET CSWY APT 12D
MIAMI BEACH, FL 33141-4224

2332090251610

DEAN THOMAS BUSH
1865 KENNEDY CSWY # 12
MIAMI BEACH, FL 33141-4238

2332090251620

JAY ASHKANOZY
1865 79TH STREET CSWY APT 12F
MIAMI BEACH, FL 33141-4224

2332090251630

VILMA T OTAZO
1865 79TH STREET CSWY APT 12G
MIAMI BEACH, FL 33141-4224

2332090251640

RAFAEL COMESANA &
LEYLA GOMEZ
1865 79TH STREET CSWY APT 12H
MIAMI BEACH, FL 33141-4224

2332090251650

SONIA ANDINO
1865 79TH STREET CSWY APT 12I
MIAMI BEACH, FL 33141-4224

2332090251660

LISETTE ABREU
1865 79TH STREET CSWY APT 12J
MIAMI BEACH, FL 33141-4224

2332090251670

TOM HUGHES
1865 79TH STREET CSWY APT 12K
MIAMI BEACH, FL 33141-4224

2332090251680

DEBORAH NEWCOMB
1536 HILTON DR
AKRON, OH 44313-5230

2332090251690

GISELE BEAUVOIR
1865 79TH STREET CSWY APT 12M
MIAMI BEACH, FL 33141-4224

2332090251700

PEDRO MARTINEZ &W MARIA
% MANUEL H CUERVO
12330 SW 22ND LN
MIAMI, FL 33175-7705

2332090251710

NADER ZEHTAB &W DAHLIA B
1865 79TH STREET CSWY APT 12O
MIAMI BEACH, FL 33141-4225

2332090251720

TERENCE MCKINNON
1865 79TH STREET CSWY APT 14A
MIAMI BEACH, FL 33141-4225

2332090251730

JUAN C FREIRE &W
ERIKA BOZZO
1865 79TH STREET CSWY APT 14B
MIAMI BEACH, FL 33141-4225

2332090251740

LAURA ELAINE PUTLEK
1865 KENNEDY CSWY APT 14C
MIAMI BEACH, FL 33141-4225

2332090251750

ESTMO LLC
1865 79TH STREET CSWY APT 14D
MIAMI BEACH, FL 33141-4225

2332090251760

LILLIAN SUM
1865 79TH STREET CSWY UNIT 14
MIAMI BEACH, FL 33141-4238

2332090251770

NIBIA F RODRIGUEZ
1865 79TH STREET CSWY APT 14F
MIAMI BEACH, FL 33141-4225

2332090251780

SUSAN P RYAN
1865 79TH STREET CSWY APT 14G
MIAMI BEACH, FL 33141-4225

2332090251790

CONFIDENTIAL
1865 79TH STREET CSWY UNIT 15H
MIAMI BEACH, FL 33141

2332090251800

ALBA S GARCIA
1865 79TH STREET CSWY APT 14I
MIAMI BEACH, FL 33141-4225

2332090251810

RONALD A COLEMAN
1865 79TH STREET CSWY APT 14J
MIAMI BEACH, FL 33141-4225

2332090251820

ANNIE LAURIE CAMPBELL
1865 79TH STREET CSWY APT 14K
MIAMI BEACH, FL 33141-4225

2332090251830

RAFAEL COMESANA
1865 79TH STREET CSWY APT 14L
MIAMI BEACH, FL 33141-4225

2332090251840

MARIA TANNHAUSER
1865 79TH STREET CSWY APT 14M
MIAMI BEACH, FL 33141-4225

2332090251850

JOHN R PARDI
1865 79TH STREET CSWY UNIT 14
MIAMI BEACH, FL 33141-4238

2332090251860

RAMIRO P SCHEJTMAN
1865 79TH STREET CSWY APT 14O
MIAMI BEACH, FL 33141-4225

2332090251870

JESUS WILCHES &W ADRIANA P
1865 79TH STREET CSWY APT 15A
MIAMI BEACH, FL 33141-4225

2332090251880

ELOINA LYMAN
1865 79TH STREET CSWY APT 15B
MIAMI BEACH, FL 33141-4225

2332090251890

ALLIVEL M CHETTY
1865 79TH STREET CSWY APT 15C
MIAMI BEACH, FL 33141-4225

2332090251900

LISA HEFTEL
1865 79TH STREET CSWY APT 15D
MIAMI BEACH, FL 33141-4225

2332090251910

IVAN BURGUENO
1865 79TH STREET CSWY APT 15E
MIAMI BEACH, FL 33141-4225

2332090251920

BONNIE RODRIGUEZ
900 BAY DR APT 202
MIAMI BEACH, FL 33141-5630

2332090251930

ALEENA G RAMRATTAN
1865 79TH STREET CSWY APT 15G
MIAMI BEACH, FL 33141-4225

2332090251940

ESTHER J CARDONA
1865 79TH STREET CSWY APT 15H
MIAMI BEACH, FL 33141-4225

2332090251950

JACK R REITER
5820 SW 97TH ST
MIAMI, FL 33156-2060

2332090251960

RUDOLF KOHN
1865 79TH STREET CSWY APT 15J
MIAMI BEACH, FL 33141-4225

2332090251970

FIDA CHOUDHURY
1865 79TH STREET CSWY APT 15K
MIAMI BEACH, FL 33141-4225

2332090251980

MARCUS R BENTINE
1865 79TH STREET CSWY APT 15L
MIAMI BEACH, FL 33141-4213

2332090251990

JOSE A SANTANA
1865 79TH STREET CSWY APT 15M
MIAMI BEACH, FL 33141-4213

2332090252000

JESUS DIAZ
1865 79 CSWY #15N
N BAY VILLAGE, FL 33141-4213

2332090252010

GIGI LAND INC
3 FAIRLAWN DR
DEER PARK, NY 11729-5407

2332090252020

MARTA HERNANDEZ
% RAUL CARRERAS JR
7200 MIAMI LAKEWAY S
HIALEAH, FL 33014-2604

2332090252030

CARLOS ALVAREZ
1865 79TH STREET CSWY APT 16B
MIAMI BEACH, FL 33141-4213

2332090252040

CARLOS MAIKEL MACIAS
1865 79TH STREET CSWY APT 16C
MIAMI BEACH, FL 33141-4213

2332090252050

HIROKAZU ASANO
YUKI SHIMADA
1865 79TH STREET CSWY APT 16D
MIAMI BEACH, FL 33141-4213

2332090252060

ABRAHAM TAMIR &W ORA
1865 79TH STREET CSWY APT 16E
MIAMI BEACH, FL 33141-4213

2332090252070

RODOLFO A PORRO
1865 79TH STREET CSWY APT 16F
MIAMI BEACH, FL 33141-4213

2332090252080

TOYOKO KONNO
12029 NW 13TH ST
HOLLYWOOD, FL 33026-3877

2332090252090

FLORA L HEREU
1865 79TH STREET CSWY APT 16H
MIAMI BEACH, FL 33141-4213

2332090252100

IRENE GAVIRIA
ELVIRA SALGADO
1865 79TH STREET CSWY APT 16I
MIAMI BEACH, FL 33141-4213

2332090252110

SHARON GUILES
1865 79TH STREET CSWY APT 16J
MIAMI BEACH, FL 33141-4213

2332090252120

KID LEITAO
1865 KENNEDY CSWY APT 16K
MIAMI BEACH, FL 33141-4213

2332090252130

LINDA PAYDAR
1865 79TH STREET CSWY APT 16L
MIAMI BEACH, FL 33141-4213

2332090252140

HSBC BANK USA N A TRS
C/O DOUGLAS C AHM
18830 US HIGHWAY 19 N STE 300
CLEARWATER, FL 33764-5123

2332090252150

EDWARD BARLETTA
1865 79TH STREET CSWY APT 16N
MIAMI BEACH, FL 33141-4213

2332090252160

IRIS MARKS LE
REM RANDOLPH MARKS
1865 79TH STREET CSWY # 160
MIAMI BEACH, FL 33141-4238

2332090252170

JULIO E MENDEZ
1865 79TH STREET CSWY # PHA
MIAMI BEACH, FL 33141-4238

2332090252180

DANIEL O OTOYA &W ANDREA L
45 51 217 ST
BAYSIDE, NY 11361

2332090252190

JOAQUIN CAMPOS
1865 79TH STREET CSWY # PHC
MIAMI BEACH, FL 33141-4238

2332090252200

MILLICENT MCFADDEN
1865 79TH STREET CSWY # PHD
MIAMI BEACH, FL 33141-4238

2332090252210

HARRIET STOCK
1865 79 ST CSWY UNIT PH E
MIAMI BEACH, FL 33141-4213

2332090252220

JOHN L HERLIHY
1865 79 ST CSWY UNIT PH F
MIAMI BCH, FL 33141-4238

2332090252230

MARIA J FRIEDOPFER
1865 79TH STREET CSWY # PHG
MIAMI BEACH, FL 33141-4238

2332090252240

EILEEN CHEA HARAN
% CHEA HARAN A R N P
PO BOX 901747
HOMESTEAD, FL 33090-1747

2332090252250

FRANCISCO MEIS &W LUZ
1865 79TH STREET CSWY # PHI
MIAMI BEACH, FL 33141-4238

2332090252260

MOHAMAD J AKHTER
1865 79TH STREET CSWY # PHJ
MIAMI BEACH, FL 33141-4238

2332090252270

JENNIFER KLAASSENS
1865 79TH STREET CSWY # PHK
MIAMI BEACH, FL 33141-4238

2332090252280

ROGER ROJAS
644 ENFIELD CT
DELRAY BEACH, FL 33444-1749

2332090252290

EDWARD BARLETTA
MARIA R BARLETTA
1865 79TH STREET CSWY # 16
MIAMI BEACH, FL 33141-4238

2332090252300

WAYNE GORDON
1865 79TH STREET CSWY PH N
MIAMI BEACH, FL 33141-4213

2332090252310

MARIA ESTER VILATOBA-TARRES
247 SW 8TH ST # 335
MIAMI, FL 33130-3529

2332090510001

REFERENCE ONLY
THE LEXI CONDO

2332090510010

MIGUEL SANCHEZ &
CESAR YOUKHADAR
7668 NW 116TH AVE
MIAMI, FL 33178-1395

2332090510020

LEXI DEVELOPMENT CO INC
7301 SW 57TH CT STE 565
MIAMI, FL 33143-5334

2332090510030

LEXI DEVELOPMENT CO INC
7301 SW 57TH CT STE 565
MIAMI, FL 33143-5334

2332090510040

AMADOR PERALTA &W
CAROLINA CONTRERAS
526 SILTSTONE PL
CARY, NC 27519-1828

2332090510050

JILL SINATRA
130 CIRCLE RD
SYOSSET, NY 11791-2304

2332090510060

PAT GIGANTI
3193 RIDGEWAY RD
MANCHESTER TOWNSHIP, NJ 08759-4804

2332090510070

LEXI DEVELOPMENT CO INC
7301 SW 57TH CT STE 565
MIAMI, FL 33143-5334

2332090510080

TODD ALDERTON &W
JAMES MILANA
27 STONE FENCE RD
ALLENDALE, NJ 07401-1852

2332090510090

ARLENE R COHEN & MENACHEM COHEN &
RACHEL AMAR TRS
PO BOX 488
HEWLETT, NY 11557-0488

2332090510100

LEXI DEVELOPMENT CO INC
7301 SW 57TH CT STE 565
MIAMI, FL 33143-5334

2332090510110

LEXI DEVELOPMENT CO INC
7301 SW 57TH CT STE 565
MIAMI, FL 33143-5334

2332090510120

LEXI DEVELOPMENT CO INC
7301 SW 57TH CT STE 565
MIAMI, FL 33143-5334

2332090510130

LEXI DEVELOPMENT CO INC
7301 SW 57TH CT STE 565
MIAMI, FL 33143-5334

2332090510140

LEXI DEVELOPMENT CO INC
7301 SW 57TH CT STE 565
MIAMI, FL 33143-5334

2332090510150

LEROY GOLDSTEIN
17621 SW 61ST CT
FORT LAUDERDALE, FL 33331-1719

2332090510160

LEXI DEVELOPMENT CO INC
7301 SW 57TH CT STE 565
MIAMI, FL 33143-5334

2332090510170

ARLENE ROCK
8325 SW 72ND AVE # 313
MIAMI, FL 33143-7695

2332090510180

ALL GLOBE TRADING INC
7901 HISPANOLA AVE APT 902
MIAMI BEACH, FL 33141-4154

2332090510190

GIANPAOLO MORSELLI
1700 KENNEDY CSWY #1002
N BAY VILLAGE, FL 33141

2332090510200

FRANCISCO JOSE ANGULO
1700 KENNEDY CSWY 1102
MIAMI, FL 33141

2332090510210

MICHEL GOURVENNEC
1700 KENNEDY CSWY #1202
NO BAY VILLAGE, FL 33141

2332090510220

LEXI DEVELOPMENT CO INC
7301 SW 57TH CT STE 565
MIAMI, FL 33143-5334

2332090510230

DAMARCUS BEASLEY
C/O EQUIS GROUP LLC
17603 GARDEN RIDGE CIR
GLENCOE, MO 63038-2605

2332090510240

LEXI DEVELOPMENT CO INC
7301 SW 57TH CT STE 565
MIAMI, FL 33143-5334

2332090510250

ROBERT C ROGERS JR TRS &
MARTIN SANCHEZ
2910 21 AVE
SAN FRANCISCO, CA 94132

2332090510260

CLAUDIO GOTTARDO
1700 KENNEDY CSWY #1802
N BAY VILLAGE, FL 33141

2332090510270

CHERBER HOLDINGS INC
2775 NE 187TH ST APT 124
MIAMI, FL 33180-2917

2332090510280

STEVEN A COHEN & JTRS
C/O BRUCIA & S
366 MADISON AVE
NEW YORK, NY 10017-3122

2332090510290

HOWARD LAWSON &W CHARLENE
4 HOTHER LN
BAY SHORE, NY 11706-7623

2332090510300

PATRICK HASLETT &W
OLUWATOYIN SHONUKAN
32 COOL CREEK CT
CARMEL, IN 46033-1984

2332090510310

ROBERTO CASTRO &W IRMA P
1700 KENNEDY CSWY #803
N BAY VILLAGE, FL 33141

2332090510320

LEXI DEVELOPMENT CO INC
7301 SW 57TH CT STE 565
MIAMI, FL 33143-5334

2332090510330

LEXI DEVELOPMENT CO INC
7301 SW 57TH CT STE 565
MIAMI, FL 33143-5334

2332090510340

LEXI DEVELOPMENT CO INC
7301 SW 57TH CT STE 565
MIAMI, FL 33143-5334

2332090510350

LEXI DEVELOPMENT CO INC
7301 SW 57TH CT STE 565
MIAMI, FL 33143-5334

2332090510360

MICHAEL LUKOVSKY &W LUDMILA
4568 BEDFORD AVE
BROOKLYN, NY 11235-2527

2332090510370

JUAN PAROLE
JIMENEZ CAVIEDES
1700 KENNEDY CSWY #1503
N BAY VILLAGE, FL 33141

2332090510380

GUSTAVO RODRIGUEZ &W KATHLEEN
11028 HAWKINS HOME BLVD
FORT WORTH, TX 76126-4745

2332090510390

LUIS EDUARDO PROTA
JORGE JUAN 15
MADRID 28001 SPAIN

2332090510400

RONALDO RODAN
1700 KENNEDY CSWY #1803
N BAY VILLAGE, FL 33141

2332090510410

MIGUEL ALBERTO SUSMAN
AVDA DEL LIBERTADOR 2374 3ER PISO
BUENOS AIRES, ARGENTINA

2332090510420

LEXI DEVELOPMENT CO INC
7301 SW 57TH CT STE 565
MIAMI, FL 33143-5334

2332090510430

LEXI DEVELOPMENT CO INC
7301 SW 57TH CT STE 565
MIAMI, FL 33143-5334

2332090510440

RICHARD M PAUWELS &W JILLIAN B
16213 GILMORE ST
VAN NUYS, CA 91406-5803

2332090510450

RADOMIR MLADENOVIC
700 NE 25 ST STON LOFT #1504
MIAMI, FL 33137

2332090510460

MARILU SUAREZ
1450 BRICKELL BAY DR APT 503
MIAMI, FL 33131-3624

2332090510470

LEXI DEVELOPMENT CO INC
7301 SW 57TH CT STE 565
MIAMI, FL 33143-5334

2332090510480

LEXI DEVELOPMENT CO INC
7301 SW 57TH CT STE 565
MIAMI, FL 33143-5334

2332090510490

LEXI DEVELOPMENT CO INC
7301 SW 57TH CT STE 565
MIAMI, FL 33143-5334

2332090510500

LEXI MIA INVEST 1710 LLC
701 BRICKELL AVE STE 1460
MIAMI, FL 33131-2800

2332090510510

LEXI DEVELOPMENT CO INC
7301 SW 57TH CT STE 565
MIAMI, FL 33143-5334

2332090510520

ANDREW S LEVY
69 PARK AVE
MORRISTOWN, NJ 07960-4780

2332090510530

LEXI MIAMI INVESTMENT LLC
701 BRICKELL AVE STE 1460
MIAMI, FL 33131-2800

2332090510540

MARIA DOLORES GARCIA
17021 N BAY RD APT 312
NORTH MIAMI BEACH, FL 33160-4204

2332090510550

MASSIMILIANO ZAMBELLI
1700 KENNEDY CAUSEWAY #1904
N BAY VILLAGE, FL 33141

2332090510560

LENNY KRUGLYAK
112 CHEYENNE WAY
WAYNE, NJ 07470-4905

2332090510570

BIJAN BAHMANYAR
3809 JONES BRIDGE RD
CHEVY CHASE, MD 20815-5724

2332090510580

LILLA HARTAI
33 GOLD ST APT 327
NEW YORK, NY 10038-2828

2332090510590

LEXI DEVELOPMENT CO INC
7301 SW 57TH CT STE 565
MIAMI, FL 33143-5334

2332090510600

LEXI DEVELOPMENT CO INC
7301 SW 57TH CT STE 565
MIAMI, FL 33143-5334

2332090510610

JUDY SOFER
1630 45TH ST
BROOKLYN, NY 11204-1112

2332090510620

KJB VILLAGE PROPERTY LLC
2100 S HIBISCUS DR
MIAMI, FL 33181-2342

2332090510630

JOSEPH STEINMATZ
1700 KENNEDY CSWY #1205
NORTH BAY VILLAGE, FL 33141

2332090510640

ELIA KOHN
82 S 8TH ST APT 1L
BROOKLYN, NY 11211-6093

2332090510650

LEXI DEVELOPMENT CO INC
7301 SW 57TH CT STE 565
MIAMI, FL 33143-5334

2332090510660

LEXI DEVELOPMENT CO INC
7301 SW 57TH CT STE 565
MIAMI, FL 33143-5334

2332090510670

EMANUEL EFRONI
2013 SW 31ST AVE
HALLANDALE, FL 33009-2031

2332090510680

LEXI DEVELOPMENT CO INC
7301 SW 57TH CT STE 565
MIAMI, FL 33143-5334

2332090510690

LEXI DEVELOPMENT CO INC
7301 SW 57TH CT STE 565
MIAMI, FL 33143-5334

2332090510700

LEXI DEVELOPMENT CO INC
7301 SW 57TH CT STE 565
MIAMI, FL 33143-5334

2332090510710

LEXI DEVELOPMENT CO INC
7301 SW 57TH CT STE 565
MIAMI, FL 33143-5334

2332090510720

LEXI DVELOPMENT CO INC
7301 SW 57TH CT STE 565
MIAMI, FL 33143-5334

2332090510730

LEXI DVELOPMENT CO INC
7301 SW 57TH CT STE 565
MIAMI, FL 33143-5334

2332090510740

VICTOR KONG &W
SILVINA GONZALEZ
1700 KENNEDY CSWY #906
N BAY VILLAGE, FL 33141

2332090510750

MANUEL ANTUNA &W
SUZANNE BELL ANTUNA
7901 HISPANOLA AVE APT 1006
MIAMI BEACH, FL 33141-4154

2332090510760

MAURA DAUSEY
166 E 61ST ST APT 16H
NEW YORK, NY 10065-8515

2332090510770

LEXI DVELOPMENT CO INC
7301 SW 57TH CT STE 565
MIAMI, FL 33143-5334

2332090510780

LUIS A AGUDELO &W MONICA
6770 INDIAN CREEK DR APT 9K
MIAMI BEACH, FL 33141-5751

2332090510790

MARK HERBERT COLEMAN
10 CHRIS ELIOT CT
COCKEYSVILLE, MD 21030-1525

2332090510800

DAYSE CONCEICAO
1700 KENNEDY CSWY #1606
N BAY VILLAGE, FL 33141

2332090510810

LEXI DVELOPMENT CO INC
7301 SW 57TH CT STE 565
MIAMI, FL 33143-5334

2332090510820

LEXI 1806 LLC
57 ROUND A BEND RD
TARRYTOWN, NY 10591-6517

2332090510830

HAROLD FLEISHER
175 W 87TH ST APT 21H
NEW YORK, NY 10024-2909

2332090510840

LEXI DVELOPMENT CO INC
7301 SW 57TH CT STE 565
MIAMI, FL 33143-5334

2332090510850

CESAR IZTURIS
7901 HISPANOLA AVE APT 607
MIAMI BEACH, FL 33141-4153

2332090510860

LEXI DVELOPMENT CO INC
7301 SW 57TH CT STE 565
MIAMI, FL 33143-5334

2332090510870

SOLOMON GLUCK
10 GETZEL BERGER BLVD UNIT 205
MONROE, NY 10950-6319

2332090510880

ARNOBIO FREIRE & MARCOS FREIRE &
MARCELO FREIRE
1700 KENNEDY CSWY #907
N BAY VILLAGE, FL 33141

2332090510890

LEXI DVELOPMENT CO INC
7301 SW 57TH CT STE 565
MIAMI, FL 33143-5334

2332090510900

LEXI DVELOPMENT CO INC
7301 SW 57TH CT STE 565
MIAMI, FL 33143-5334

2332090510910

LEXI DVELOPMENT CO INC
7301 SW 57TH CT STE 565
MIAMI, FL 33143-5334

2332090510920

LEXI DVELOPMENT CO INC
7301 SW 57TH CT STE 565
MIAMI, FL 33143-5334

2332090510930

LEXI DVELOPMENT CO INC
7301 SW 57TH CT STE 565
MIAMI, FL 33143-5334

2332090510940

LEXI DVELOPMENT CO INC
7301 SW 57TH CT STE 565
MIAMI, FL 33143-5334

2332090510950

LEXI DVELOPMENT CO INC
7301 SW 57TH CT STE 565
MIAMI, FL 33143-5334

2332090510960

LEXI DVELOPMENT CO INC
7301 SW 57TH CT STE 565
MIAMI, FL 33143-5334

2332090510970

LEXI DVELOPMENT CO INC
7301 SW 57TH CT STE 565
MIAMI, FL 33143-5334

2332090510980

LEXI DVELOPMENT CO INC
7301 SW 57TH CT STE 565
MIAMI, FL 33143-5334

2332090510990

NESTOR MORILLO
2828 NW 17TH AVE
MIAMI, FL 33142-6630

2332090511000

CARLOS GAVIDIA &W LAURA K
1700 KENNEDY CSWY #708
N BAY VILLAGE, FL 33141

2332090511010

LEXI DVELOPMENT CO INC
7301 SW 57TH CT STE 565
MIAMI, FL 33143-5334

2332090511020

MICHAEL LAVACHIA &W
LAURA HENDRICKSON
1619 3RD AVE APT 2C
NEW YORK, NY 10128-3460

2332090511030

LEXI DVELOPMENT CO INC
7301 SW 57TH CT STE 565
MIAMI, FL 33143-5334

2332090511040

JOEL WEITZMAN
166 42 22ND
WHITESTONE, NY 11357

2332090511050

CHECK C ENG &W ONEIDA B
8704 RAYBURN RD
BETHESDA, MD 20817-3632

2332090511060

LEXI DVELOPMENT CO INC
7301 SW 57TH CT STE 565
MIAMI, FL 33143-5334

2332090511070

LEXI DVELOPMENT CO INC
7301 SW 57TH CT STE 565
MIAMI, FL 33143-5334

2332090511080

PAUL KEMPINSKI
4867 ROTHSCHILD DR
POMPANO BEACH, FL 33067-4139

2332090511090

LEXI DVELOPMENT CO INC
7301 SW 57TH CT STE 565
MIAMI, FL 33143-5334

2332090511100

LEXI 1808 LLC
10 BARNEY PARK
IRVINGTON, NY 10533-1601

2332090511110

LEXI DVELOPMENT CO INC
7301 SW 57TH CT STE 565
MIAMI, FL 33143-5334

2332090511120

LEXI DVELOPMENT CO INC
7301 SW 57TH CT STE 565
MIAMI, FL 33143-5334

2332090511130

STEVEN HSUN &W ROSA E
1561 NW 168TH AVE
HOLLYWOOD, FL 33028-1374

2332090511140

DANIEL MAX AZICRI &W HELEN
54 EAST PARK AVE
LONG BEACH, NY 11561

2332090511150

LEXI DVELOPMENT CO INC
7301 SW 57TH CT STE 565
MIAMI, FL 33143-5334

2332090511160

SPYRIDON SKORDILIS &W CLEOPATRA
9533 BYRON AVE
MIAMI BEACH, FL 33154-2441

2332090511170

JUDITH LYNN ROTH
1700 KENNEDY CSWY #1109
N BAY VILLAGE, FL 33141-0000

2332090511180

ARMAN J RIVARD &W MICHELE A
13 FREEWAY DR
ATTLEBORO, MA 02703-1074

2332090511190

LONNIE D GADDY III &W PAMELA D
1700 KENNEDY CSWY #1409
N BAY VILLAGE, FL 33141

2332090511200

LEXI DVELOPMENT CO INC
7301 SW 57TH CT STE 565
MIAMI, FL 33143-5334

2332090511210

MAYER ROSENBERG
PO BOX 34
WOODRIDGE, NY 12789-0034

2332090511220

LEXI MIAMI INVEST LLC
701 BRICKELL AVE STE 1460
MIAMI, FL 33131-2800

2332090511230

ANABELLA CABELLO
18445 NE 30TH PL
NORTH MIAMI BEACH, FL 33160-5216

2332090511240

LEXI DVELOPMENT CO INC
7301 SW 57TH CT STE 565
MIAMI, FL 33143-5334

2332090511250

LEXI DVELOPMENT CO INC
7301 SW 57TH CT STE 565
MIAMI, FL 33143-5334

2332090511260

RICHARD M PAUWELS &W JILLIAN B
16213 GILMORE ST
VAN NUYS, CA 91406-5803

2332090511270

LEXI DVELOPMENT CO INC
7301 SW 57TH CT STE 565
MIAMI, FL 33143-5334

2332090511280

LEXI DVELOPMENT CO INC
7301 SW 57TH CT STE 565
MIAMI, FL 33143-5334

2332090511290

LEXI DVELOPMENT CO INC
7301 SW 57TH CT STE 565
MIAMI, FL 33143-5334

2332090511300

LEXI DVELOPMENT CO INC
7301 SW 57TH CT STE 565
MIAMI, FL 33143-5334

2332090511310

GREY HOLDINGS INC
2775 NE 187TH ST APT 124
MIAMI, FL 33180-2917

2332090511320

LEXI DVELOPMENT CO INC
7301 SW 57TH CT STE 565
MIAMI, FL 33143-5334

2332090511330

LEXI MIAMI INVEST LLC
701 BRICKELL AVE STE 1460
MIAMI, FL 33131-2800

2332090511340

LEXI DVELOPMENT CO INC
7301 SW 57TH CT STE 565
MIAMI, FL 33143-5334

2332090511350

MANA CONSULTING LLC
701 BRICKELL AVE STE 1460
MIAMI, FL 33131-2800

2332090511360

LEXI MIA INVEST 1810 LLC
701 BRICKELL AVE STE 1460
MIAMI, FL 33131-2800

2332090511370

LEXI DVELOPMENT CO INC
7301 SW 57TH CT STE 565
MIAMI, FL 33143-5334

2332090511380

MARC EISENBERGER
12 GRACE RD
EAST BRUNSWICK, NJ 08816-2752

2332090511390

RENEE KAUFMAN
450 MONTICELLO LN
LAKEWOOD, NJ 08701-5790

2332090511400

NOCHOLAS D SIEGFRIED
1700 KENNEDY CSWY #811
N BAY VILLIAGE, FL 33141

2332090511410

ALLGLOBE TRADING INC
1700 KENNEDY CSWY #911
N BAY VILLAGE, FL 33141

2332090511420

JACQUES ABITBOL
1700 KENNEDY CSWY #1011
N BAY VILLAGE, FL 33141

2332090511430

LEXI DVELOPMENT CO INC
7301 SW 57TH CT STE 565
MIAMI, FL 33143-5334

2332090511440

GEORGE PRENDES &W BEATRIZ
7412 SW 53RD AVE
MIAMI, FL 33143-5906

2332090511450

LEXI DVELOPMENT CO INC
7301 SW 57TH CT STE 565
MIAMI, FL 33143-5334

2332090511460

URI SASSON DALY SOSA
1700 KENNEDY CSWY #1511
N BAY VILLAGE, FL 33141

2332090511470

LEXI DVELOPMENT CO INC
7301 SW 57TH CT STE 565
MIAMI, FL 33143-5334

2332090511480

LEXI DVELOPMENT CO INC
7301 SW 57TH CT STE 565
MIAMI, FL 33143-5334

2332090511490

LEXI DVELOPMENT CO INC
7301 SW 57TH CT STE 565
MIAMI, FL 33143-5334

2332090511500

LEXI DVELOPMENT CO INC
7301 SW 57TH CT STE 565
MIAMI, FL 33143-5334

2332090511510

JOHN CABANAS &W ADALJIZA
6767 COLLINS AVE APT 702
MIAMI BEACH, FL 33141-3264

2332090511520

LEXI DVELOPMENT CO INC
7301 SW 57TH CT STE 565
MIAMI, FL 33143-5334

2332090511530

GEORGE MCMILLIAN &W MARGARET
614 EASTERN PKWY
BROOKLYN, NY 11225-1604

2332090511540

JACQUELIN FERDINAND
PO BOX 530619
MIAMI, FL 33153-0619

2332090511550

JUSTIN FUHRMAN
9655 E BAY HARBOR DR # 7N
MIAMI BEACH, FL 33154-2126

2332090511560

LEXI DVELOPMENT CO INC
7301 SW 57TH CT STE 565
MIAMI, FL 33143-5334

2332090511570

LEXI DVELOPMENT CO INC
7301 SW 57TH CT STE 565
MIAMI, FL 33143-5334

2332090511580

CAROLINE E GAYNOR
960 NE 78TH ST
MIAMI, FL 33138-4708

2332090511590

AJIT BAINS
102 ASPEN DR
PRINCETON JUNCTION, NJ 08550-3256

2332090511600

MEI SIEW LING
177 E HARTSDALE AVE
HARTSDALE, NY 10530-3543

2332090511610

HENRY AHN &W RAYE DUBE
8 VELA WAY
EDGEWATER, NJ 07020-1564

2332090511620

RIZWAN KANJI
12 BELKNAP CT
HUNTINGTON, NY 11743-4897

2332090511630

MYRON LUBIN
BARBARA LUBIN
1700 KENNEDY CSWY #1912
NO BAY VILLAGE, FL 33141

2332090511640

JOHN CABANAS &W ADALJIZA
6767 COLLINS AVE APT 702
MIAMI BEACH, FL 33141-3264

2332090511650

LEXI DVELOPMENT CO INC
7301 SW 57TH CT STE 565
MIAMI, FL 33143-5334

2332090511660

LEXI DEVELOPMENT CO INC
7301 SW 57 CR STE 565
SOUTH MIAMI, FL 33143

Attachment E

Florida Department of Environmental Protection Submerged Land Lease

CFN 2009R0789382
OR Bk 27068 Pgs 1428 - 1444; (17pgs)
RECORDED 11/02/2009 11:30:23
HARVEY RUVIN, CLERK OF COURT
MIAMI-DADE COUNTY, FLORIDA

This Instrument Prepared By:
Taurean J. Lewis
Recurring Revenue Section
Bureau of Public Land Administration
3900 Commonwealth Boulevard
Mail Station No. 125
Tallahassee, Florida 32399

BOARD OF TRUSTEES OF THE INTERNAL IMPROVEMENT TRUST FUND
OF THE STATE OF FLORIDA

SOVEREIGNTY SUBMERGED LANDS LEASE RENEWAL
MODIFICATION TO INCREASE NUMBER OF SLIPS AND REFLECT CURRENT STRUCTURES

No. 130010996
PA No. 13-0142665-003

THIS LEASE is hereby issued by the Board of Trustees of the Internal Improvement Trust Fund of the State of Florida, hereinafter referred to as the Lessor.

WITNESSETH: That for and in consideration of payment of the annual lease fees hereinafter provided and the faithful and timely performance of and compliance with all terms and conditions stated herein, the Lessor does hereby lease to Inn on North Bay, Ltd., a Florida limited partnership, hereinafter referred to as the Lessee, the sovereignty lands described as follows:

> A parcel of sovereignty submerged land in Section 09, Township 53 South, Range 42 East, in Biscayne Bay, Miami-Dade County, containing 28,020 square feet, more or less, as is more particularly described and shown on Attachment A, dated April 30, 2009.

TO HAVE THE USE OF the hereinabove described premises from August 13, 2009, the effective date of this modified lease renewal, through April 25, 2012, the expiration date of this modified lease renewal. The terms and conditions on and for which this modified lease renewal is granted are as follows:

1. USE OF PROPERTY: The Lessee is hereby authorized to operate a 20-slip docking facility with a non-water dependent dining area exclusively to be used for mooring of recreational vessels in conjunction with an upland motel and restaurant, without fueling facilities, with a sewage pumpout facility if it meets the regulatory requirements of the State of Florida Department of Environmental Protection or local authority, whichever entity applies the more stringent criteria, and without liveaboards as defined in paragraph 29, as shown and conditioned in Attachment A, and the State of Florida Department of Environmental Protection, Environmental Resource Permit Exemption No. 13-0142665-003, dated February 19, 2007, incorporated herein and made a part of this lease by reference. All of the foregoing subject to the remaining conditions of this Lease.

2. LEASE FEES: The Lessee hereby agrees to pay to the Lessor an annual lease fee of $4,187.73, plus sales tax pursuant to Section 212.031, Florida Statutes, if applicable, within 30 days of the date of receipt of the invoice. The annual fee for the remaining years of this lease shall be adjusted pursuant to provisions of Rule 18-21.011, Florida Administrative Code. The State of Florida Department of Environmental Protection, Division of State Lands (the "Division") will notify the Lessee in writing of the amount and the due date of each subsequent annual lease payment during the remaining term of this lease. All lease fees due hereunder shall be remitted to the Division, as agent for the Lessor.

50

CIRCUIT AND COUNTY COURTS MIAMI-DADE COUNTY, FLORIDA

19

3. WET SLIP RENTAL CERTIFICATION/SUPPLEMENTAL PAYMENT: (A) The Lessee shall provide upon request by the Lessor any and all information in a certified form needed to calculate the lease fee specified in paragraph two (2) above, including the income, as defined in subsection 18-21.003(28), Florida Administrative Code, derived directly or indirectly from the use of sovereignty submerged lands on an annual basis. When six percent (6%) of said annual income exceeds the base fee or minimum annual fee established pursuant to Rule 18-21.011, Florida Administrative Code, for any lease year during the term of this lease, the Lessor shall send the Lessee a supplemental invoice for the difference in the amounts for that lease year. (B) The instrument or agreement used by the Lessee to transfer or assign the right to use a wet slip at the leased docking facility to a third party shall include a provision that clearly notifies the wet slip renter/user/holder that if the wet slip renter/user/holder subsequently transfers his right to use said wet slip to another party, the instrument or agreement used to transfer said wet slip shall contain a provision that requires six percent (6%) of the annual gross income derived from said instrument or agreement for the use of said wet slip be paid to the Lessee who, upon receipt, shall report and transmit said amount to the Lessor. The instrument or agreement used by the Lessee to transfer a wet slip shall also include a provision that clearly notifies the wet slip renter/user/holder that no interest in said wet slip may be further transferred unless a substantially similar provision to the one contained in the preceding sentence is placed in each succeeding instrument or agreement used to transfer said wet slip to each new wet slip renter/user/holder.

4. LATE FEE ASSESSMENTS: The Lessee shall pay a late payment assessment for lease fees or other charges due under this lease which are not paid within 30 days after the due date. This assessment shall be computed at the rate of twelve percent (12%) per annum, calculated on a daily basis for every day the payment is late.

5. EXAMINATION OF LESSEE'S RECORDS: For purposes of this lease, the Lessor is hereby specifically authorized and empowered to examine, for the term of this lease including any extensions thereto plus three (3) additional years, at all reasonable hours, the books, records, contracts, and other documents confirming and pertaining to the computation of annual lease payments as specified in paragraph two (2) above.

6. MAINTENANCE OF LESSEE'S RECORDS: The Lessee shall maintain separate accounting records for: (i) the gross revenue derived directly from the use of the leased premises, (ii) the gross revenue derived indirectly from the use of the leased premises, and (iii) all other gross revenue derived from the Lessee's operations on the riparian upland property. The Lessee shall secure, maintain and keep all records for the entire term of this lease plus three (3) additional years. This period shall be extended for an additional two (2) years upon request for examination of all records and accounts for lease verification purposes by the Lessor.

7. AGREEMENT TO EXTENT OF USE: This lease is given to the Lessee to use or occupy the leased premises only for those activities specified herein and as conditioned by the State of Florida Department of Environmental Protection, Environmental Resource Permit Exemption. The Lessee shall not change or add to the approved use of the leased premises as defined herein (e.g., from commercial to multi-family residential, from temporary mooring to rental of wet slips, from rental of wet slips to contractual agreement with third party for docking of cruise ships, from rental of recreational pleasure craft to rental or temporary mooring of charter/tour boats, from loading/offloading commercial to rental of wet slips, etc.), shall not change activities in any manner that may have an environmental impact that was not considered in the original authorization or regulatory permit, or shall not change the type of use of the riparian uplands without first obtaining a regulatory permit/modified permit, if applicable, and the Lessor's written authorization in the form of a modified lease, the payment of additional fees, if applicable, and, if applicable, the removal of any structures which may no longer qualify for authorization under the modified lease.

8. PROPERTY RIGHTS: The Lessee shall make no claim of title or interest to said lands hereinbefore described by reason of the occupancy or use thereof, and all title and interest to said land hereinbefore described is vested in the Lessor. The Lessee is prohibited from including, or making any claim that purports to include, said lands described or the Lessee's leasehold interest in said lands into any form of private ownership, including but not limited to any form of condominium or cooperative ownership. The Lessee is further prohibited from making any claim, including any advertisement, that said land, or the use thereof, may be purchased, sold, or re-sold.

9. INTEREST IN RIPARIAN UPLAND PROPERTY: During the term of this lease, the Lessee shall maintain a leasehold or fee simple title interest in the riparian upland property and if such interest is terminated, the lease may be terminated at the option of the Lessor. Prior to sale and/or termination of the Lessee's leasehold or fee simple title interest in the upland property, Lessee shall inform any potential buyer or transferee of the Lessee's upland property interest of the existence of this lease and all its terms and conditions and shall complete and execute any documents required by the Lessor to effect an assignment of this lease, if consented to by the Lessor. Failure to do so will not relieve the Lessee from responsibility for full compliance with the terms and conditions of this lease which include, but are not limited to, payment of all fees and/or penalty assessments incurred prior to such act.

10. ASSIGNMENT OF LEASE: This lease shall not be assigned or otherwise transferred without prior written consent of the Lessor or its duly authorized agent. Such assignment or other transfer shall be subject to the terms, conditions and provisions of this lease, current management standards and applicable laws, rules and regulations in effect at that time. Any assignment or other transfer without prior written consent of the Lessor shall be null and void and without legal effect.

11. INDEMNIFICATION/INVESTIGATION OF ALL CLAIMS: The Lessee shall investigate all claims of every nature arising out of this lease at its expense, and shall indemnify, defend and save and hold harmless the Lessor and the State of Florida from all claims, actions, lawsuits and demands arising out of this lease.

12. VENUE: Lessee waives venue as to any litigation arising from matters relating to this lease and any such litigation between Lessor and Lessee shall be initiated and maintained only in Leon County, Florida.

13. NOTICES/COMPLIANCE/TERMINATION: The Lessee binds itself, its successors and assigns, to abide by the provisions and conditions herein set forth, and said provisions and conditions shall be deemed covenants of the Lessee, its successors and assigns. In the event the Lessee fails or refuses to comply with the provisions and conditions herein set forth, or in the event the Lessee violates any of the provisions and conditions herein set forth, and the Lessee fails or refuses to comply with any of said provisions or conditions within twenty (20) days of receipt of the Lessor's notice to correct, this lease may be terminated by the Lessor upon thirty (30) days written notice to the Lessee. If canceled, all of the above-described parcel of land shall revert to the Lessor. All costs and attorneys' fees incurred by the Lessor to enforce the provisions of this lease shall be paid by the Lessee. All notices required to be given to the Lessee by this lease or applicable law or administrative rules shall be sufficient if sent by U.S. Mail to the following address:

INN ON NORTH BAY, LTD.
1819 79th Street Causeway
North Bay Village, FL 33141

The Lessee shall notify the Lessor by certified mail of any change to this address at least ten (10) days before the change is effective.

14. TAXES AND ASSESSMENTS: The Lessee shall assume all responsibility for liabilities that accrue to the subject property or to the improvements thereon, including any and all drainage or special assessments or taxes of every kind and description which are now or may be hereafter lawfully assessed and levied against the subject property during the effective period of this lease.

15. NUISANCES OR ILLEGAL OPERATIONS: The Lessee shall not permit the leased premises or any part thereof to be used or occupied for any purpose or business other than herein specified unless such proposed use and occupancy are consented to by the Lessor and the lease is modified accordingly, nor shall Lessee knowingly permit or suffer any nuisances or illegal operations of any kind on the leased premises.

16. MAINTENANCE OF FACILITY /RIGHT TO INSPECT: The Lessee shall maintain the leased premises in good condition, keeping the structures and equipment located thereon in a good state of repair in the interests of public health, safety and welfare. No dock or pier shall be constructed in any manner that would cause harm to wildlife. The leased premises shall be subject to inspection by the Lessor or its designated agent at any reasonable time.

17. NON-DISCRIMINATION: The Lessee shall not discriminate against any individual because of that individual's race, color, religion, sex, national origin, age, handicap, or marital status with respect to any activity occurring within the area subject to this lease or upon lands adjacent to and used as an adjunct of the leased area. During the lease term, the Lessee shall post and maintain the placard furnished to the Lessee by the Lessor in a prominent and visible location on the leased premises or adjacent business office of the Lessee. It shall be the responsibility of the Lessee to post the placard in a manner which will provide protection from the elements, and, in the event that said placard becomes illegible at any time during the term of this lease (including any extensions thereof), to notify the Lessor in writing, so that a replacement may be provided.

18. ENFORCEMENT OF PROVISIONS: No failure, or successive failures, on the part of the Lessor to enforce any provision, nor any waiver or successive waivers on its part of any provision herein, shall operate as a discharge thereof or render the same inoperative or impair the right of the Lessor to enforce the same upon any renewal thereof or in the event of subsequent breach or breaches.

S2

19. PERMISSION GRANTED: Upon expiration or cancellation of this lease all permission granted hereunder shall cease and terminate.

20. RENEWAL PROVISIONS: Renewal of this lease shall be at the sole option of the Lessor. Such renewal shall be subject to the terms, conditions and provisions of management standards and applicable laws, rules and regulations in effect at that time. In the event that Lessee is in full compliance with the terms of this lease, the Lessee may apply in writing for a renewal. Such application for renewal must be received by Lessor no sooner than 120 days and no later than 30 days prior to the expiration date of the original or current term hereof. The term of any renewal granted by the Lessor shall commence on the last day of the previous lease term. If the Lessee fails to timely apply for a renewal, or in the event the Lessor does not grant a renewal, the Lessee shall vacate the leased premises and remove all structures and equipment occupying and erected thereon at its expense. The obligation to remove all structures authorized herein upon termination of this lease shall constitute an affirmative covenant upon the riparian upland property more specifically described in Attachment B, which shall run with the title to said riparian upland property, and shall be binding upon Lessee and Lessee's successors in title or successors in interest.

21. REMOVAL OF STRUCTURES/ADMINISTRATIVE FINES: If the Lessee does not remove said structures and equipment occupying and erected upon the leased premises after expiration or cancellation of this lease, such structures and equipment will be deemed forfeited to the Lessor, and the Lessor may authorize removal and may sell such forfeited structures and equipment after ten (10) days written notice by certified mail addressed to the Lessee at the address specified in Paragraph 13 or at such address on record as provided to the Lessor by the Lessee. However, such remedy shall be in addition to all other remedies available to the Lessor under applicable laws, rules and regulations including the right to compel removal of all structures and the right to impose administrative fines.

22. REMOVAL COSTS/LIEN ON RIPARIAN UPLAND PROPERTY: Any costs incurred by the Lessor in removal of any structures and equipment constructed or maintained on state lands shall be paid by Lessee and any unpaid costs and expenses shall constitute a lien upon the interest of the Lessee in the riparian upland property enforceable in summary proceedings as provided by law.

23. RECORDATION OF LEASE. The Lessee, at its own expense, shall record this fully executed lease in its entirety in the public records of the county within which the lease site is located within fourteen (14) days after receipt, and shall provide to the Lessor within ten (10) days following the recordation a copy of the recorded lease in its entirety which contains the O.R. Book and pages at which the lease is recorded.

24. RIPARIAN RIGHTS/FINAL ADJUDICATION: In the event that any part of any structure authorized hereunder is determined by a final adjudication issued by a court of competent jurisdiction to encroach on or interfere with adjacent riparian rights, Lessee agrees to either obtain written consent for the offending structure from the affected riparian owner or to remove the interference or encroachment within 60 days from the date of the adjudication. Failure to comply with this paragraph shall constitute a material breach of this lease agreement and shall be grounds for immediate termination of this lease agreement at the option of the Lessor.

25. AMENDMENTS/MODIFICATIONS: This lease is the entire and only agreement between the parties. Its provisions are not severable. Any amendment or modification to this lease must be in writing, must be accepted, acknowledged and executed by the Lessee and Lessor, and must comply with the rules and statutes in existence at the time of the execution of the modification or amendment. Notwithstanding the provisions of this paragraph, if mooring is authorized by this lease, the Lessee may install boatlifts within the leased premises without formal modification of the lease provided that (a) the Lessee obtains any state or local regulatory permit that may be required; and (b) the location or size of the lift does not increase the mooring capacity of the docking facility.

26. ADVERTISEMENT/SIGNS/NON-WATER DEPENDENT ACTIVITIES/ADDITIONAL ACTIVITIES/MINOR STRUCTURAL REPAIRS: No permanent or temporary signs directed to the boating public advertising the sale of alcoholic beverages shall be erected or placed within the leased premises. No restaurant or dining activities except as authorized in this lease and conditioned by Special Lease Condition No. 31, are to occur within the leased premises. The Lessee shall ensure that no permanent, temporary or floating structures, fences, docks, pilings or any structures whose use is not water-dependent shall be erected or conducted over sovereignty submerged lands without prior written consent from the Lessor. No additional structures and/or activities including dredging, relocation/realignment or major repairs or renovations to authorized structures, shall be erected or conducted on or over sovereignty, submerged lands without prior written consent from the Lessor. Unless specifically authorized in writing by the Lessor, such activities or structures shall be considered unauthorized and a violation of Chapter 253, Florida Statutes, and shall subject the Lessee to administrative fines under Chapter 18-14, Florida Administrative Code. This condition does not apply to minor structural repairs required to maintain the authorized structures in a good state of repair in the interests of public health, safety or welfare; provided, however, that such activities shall not exceed the activities authorized by this lease.

27. ACOE AUTHORIZATION: Prior to commencement of construction and/or activities authorized herein, the Lessee shall obtain the U.S. Army Corps of Engineers (ACOE) permit if it is required by the ACOE. Any modifications to the construction and/or activities authorized herein that may be required by the ACOE shall require consideration by and the prior written approval of the Lessor prior to the commencement of construction and/or any activities on sovereign, submerged lands.

28. COMPLIANCE WITH FLORIDA LAWS: On or in conjunction with the use of the leased premises, the Lessee shall at all times comply with all Florida Statutes and all administrative rules promulgated thereunder. Any unlawful activity which occurs on the leased premises or in conjunction with the use of the leased premises shall be grounds for the termination of this lease by the Lessor.

29. LIVEABOARDS: The term "liveaboard" is defined as a vessel docked at the facility and inhabited by a person or persons for any five (5) consecutive days or a total of ten (10) days within a thirty (30) day period. If liveaboards are authorized by paragraph one (1) of this lease, in no event shall such "liveaboard" status exceed six (6) months within any twelve(12) month period, nor shall any such vessel constitute a legal or primary residence.

30. GAMBLING VESSELS: During the term of this lease and any renewals, extensions, modifications or assignments thereof, Lessee shall prohibit the operation of or entry onto the leased premises of gambling cruise ships, or vessels that are used principally for the purpose of gambling, when these vessels are engaged in "cruises to nowhere," where the ships leave and return to the state of Florida without an intervening stop within another state or foreign country or waters within the jurisdiction of another state or foreign country, and any watercraft used to carry passengers to and from such gambling cruise ships.

31. SPECIAL LEASE CONDITION: Unless authorized by the Lessor, the Lessee shall not rebuild or restore the non-water dependent structures included in this lease if 50 percent or more of the area encompassed by structure is destroyed or if use of structure has been discontinued and 50 percent or more of the structure must be replaced in order to restore structure to a safely useable condition. In addition, the use of the non-water dependent structures included in this lease shall not be converted to a new use except as authorized by the Lessor.

WITNESSES:

Theresa M. Brady
Original Signature

Theresa M. Brady
Print/Type Name of Witness

Kathy C. Griffin
Original Signature

Kathy C. Griffin
Print/Type Name of Witness

BOARD OF TRUSTEES OF THE INTERNAL IMPROVEMENT TRUST FUND OF THE STATE OF FLORIDA

(SEAL)

BY: Jeffery M. Gentry

Jeffery M. Gentry, Operations and Management Consultant Manager, Bureau of Public Land Administration, Division of State Lands, State of Florida Department of Environmental Protection, as agent for and on behalf of the Board of Trustees of the Internal Improvement Trust Fund of the State of Florida

"LESSOR"

STATE OF FLORIDA
COUNTY OF LEON

The foregoing instrument was acknowledged before me this 21st day of October, 2009 by Jeffery M. Gentry Operations and Management Consultant Manager, Bureau of Public Land Administration, Division of State Lands, State of Florida Department of Environmental Protection, as agent for and on behalf of the Board of Trustees of the Internal Improvement Trust Fund of the State of Florida. He is personally known to me.

APPROVED AS TO FORM AND LEGALITY:

DEP Attorney

Kathy C Griffin
Notary Public, State of Florida

Printed, Typed or Stamped Name

Notary Public State of Florida
Kathy C Griffin
My Commission DD727892
Expires 10/30/2011

My Commission Expires:

Commission/Serial No.

WITNESSES:

Original Signature

Oscar A. Linares
Typed/Printed Name of Witness

Original Signature

JoAnn Farnham
Typed/Printed Name of Witness

Inn on North Bay, Ltd., a Florida limited partnership (SEAL)

BY: 1819, Inc., a Florida corporation (SEAL)
its General Partner

BY:
Original Signature of Executing Authority

Charles G. Grentner
Typed/Printed Name of Executing Authority

President
Title of Executing Authority

"LESSEE"

STATE OF FLA

COUNTY OF DADE

The foregoing instrument was acknowledged before me this 7th day of October, 2009, by Charles G. Grentner, President of 1819, Inc., a Florida corporation, on behalf of the corporation which is the general partner of Inn on North Bay, Ltd., a Florida limited partnership, on behalf of the limited partnership. He is personally known to me or has produced _____, as identification.

My Commission Expires:

Notary Public State of Florida
Lina M Echevarria
My Commission DD874842
Expires 07/31/2011

Commission/Serial No.

Signature of Notary Public

Notary Public, State of Florida

Lina M Echevarria
Printed, Typed or Stamped Name

Section: 09 **Township:** 53 South **Range:** 42 East

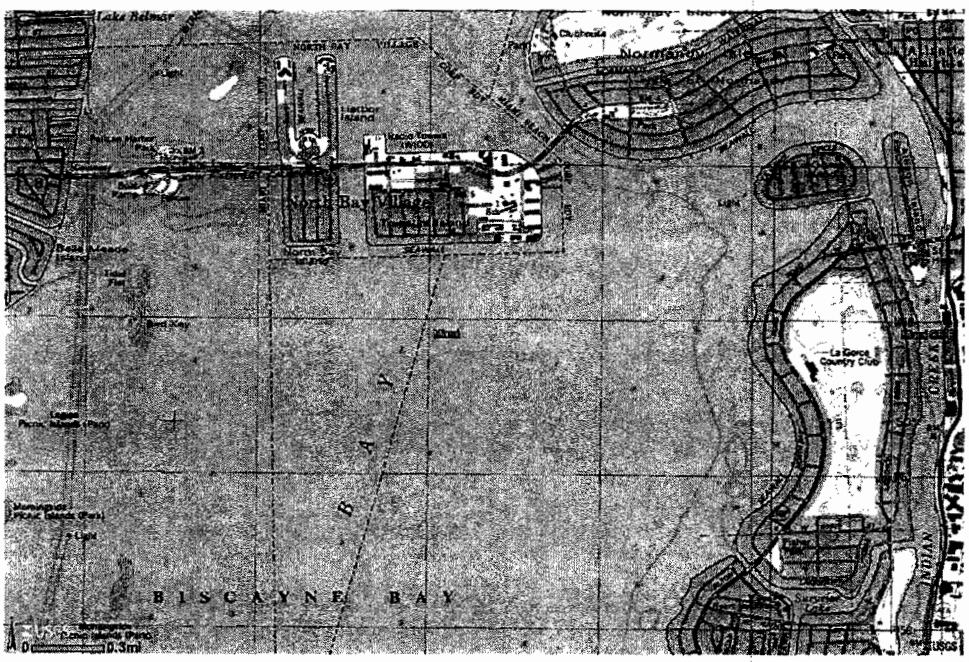

Facility Address: 1819 79th Street Cswy, North Bay Village, FL 33141

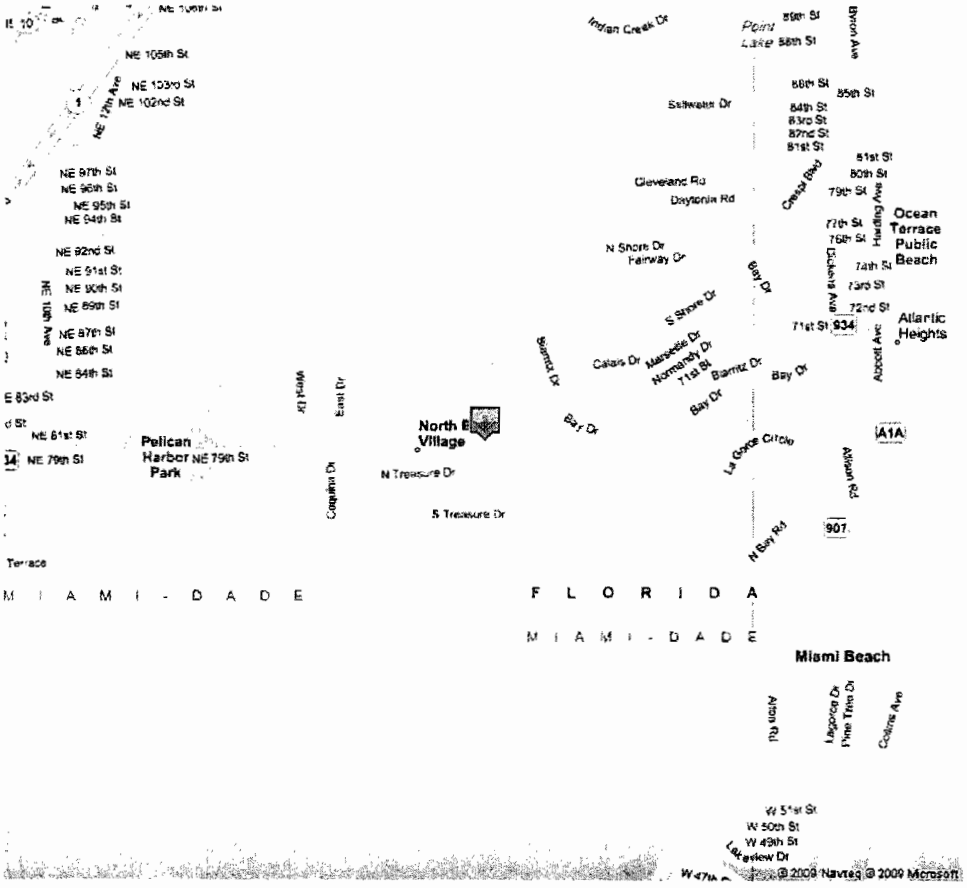

CERTIFIED TO:
THE BOARD OF TRUSTEES OF
THE STATE OF FLORIDA

SURVEYORS NOTE:

(11) DENOTES A TYPICAL BOAT SLIP NUMBER

SURVEYORS NOTES:

1. EXAMINATION OF THE ABSTRACT OF THE TITLE WILL HAVE TO BE MADE TO DETERMINE RECORD INSTRUMENTS IF ANY, AFFECTING THE PROPERTY.
2. LOCATION AND IDENTIFICATION OF UNDERGROUND UTILITIES ON AND/OR ADJACENT TO THE PROPERTY WERE NOT SEQUIRED AS SUCH INFORMATION WAS NOT REQUESTED.
3. NO SEARCH OF PUBLIC RECORDS HAS BEEN MADE (BY THIS OFFICE) FOR ACCURACY AND OR OMISSIONS.
4. THIS CERTIFICATION IS ONLY FOR THE LANDS AS DESCRIBED, IT IS NOT A CERTIFICATION OF TITLE, ZONING, EASEMENTS, OR FREEDOM FROM ENCUMBRANCES, "TITLE" ABSTRACT NOT REVIEWED.
5. THERE MAY BE ADDITIONAL RESTRICTIONS THAT ARE NOT SHOWN ON THIS SURVEY THAT MAY BE FOUND IN THE PUBLIC RECORDS OF THIS COUNTY.
6. THIS SURVEY HAS BEEN PREPARED FOR THE EXCLUSIVE USE OF ENTITIES NAMED HEREON AND THE CERTIFICATION DOES NOT EXTEND TO ANY UNNAMED PARTY.
7. BEARINGS SHOWN ARE BASED UPON THE DADE COUNTY BULKHEAD LINE AS PER PLAT BOOK 74 AT PAGE 1 SHEET 22.
8. DIMENTIONS, BEARINGS OR ANGLES INDICATED HEREIN ARE MEASURED AND ARE THE SAME AS PLAT VALUES UNLESS OTHERWISE INDICATED.
9. ALL RIGHTS OF WAYS SHOWN ARE PUBLIC UNLESS OTHERWISE NOTED.
10. UTILITY FACILITIES WITHIN UTILY EASEMENTS NOT NOTED AS VIOLATIONS, DRIVEWAYS OR PORTIONS THEREOF WITHIN ROADWAYS NOT NOTED AS VIOLATIONS OR ENCROACHMENTS.
11. THE LEGAL DESCRIPTION WAS FURNISHED BY THE CLIENT.
12. THIS DRAWING IS PROPERTY OF ZURWELLE-WHITTAKER, INC AND CANNOT BE REPRODUCED WITHOUT WRITTEN CONSENT.
13. THE ELEVATION INFORMATION SHOWN HEREON (IF ANY) IS RELATIVE TO THE NATIONAL GEODETIC VERTICAL DATUM, (N.G.V.D.), 1929.
14. BENCHMARK USED DOBM 4230 PG 150 EL=2.81
15. COORDINATES SHOWN ARE RELATIVE TO THE NORTH AMERICAN DATUM OF 1983/90.
16. COORDINATE CONVERSIONS (IF ANY) HAVE BEEN CONVERTED USING CORPSCAN V6.6.1, FROM U.S. ARMY CORPS OF ENGINEERS.

Surveyor's Certificate

I hereby certify that the attached "SPECIFIC PURPOSE SURVEY" was prepared under my direction and is true and correct to the best of my knowledge and belief, and that the survey meets Minimum Technical Standards set forth by the Florida Board Of Land Surveyors And Mappers pursuant to chapter 61G17-6, Florida Administrative code pursuant to section 472.027. Also that there are no visible encroachments other that shown hereon.

LEGAL DESCRIPTION:

THIS IS A SURVEY OF AN UPLAND PROPERTY DESCRIBED AS FOLLOWS:

TRACT "A" (PARENT TRACT)

The Easterly 310.00 feet of the Westerly 2110.00 feet of the following described tract of land, as measured along a line running at right angles to the Westerly line of said tract.

Commencing (P.O.C.) at the One-Half mile post on the West Line of Section 9, Township 53 South, Range 42 East, as shown on the Map of Highway, Right of way of proposed N.E. 79th Street Causeway, which is recorded in Plat Book 28, at page 70 of the public records of Miami-Dade County, Florida, thence run North 88° 41' 24" East, a distance of 1960.00 feet; thence run North 1° 37' 08" West, a distance of 50.00 feet to the Point or Place of Beginning (P.O.B.) of the hereinafter described Tract of Land; thence continue North 1° 37' 08" West, a distance of 129.730 feet to the Point of Curvature (P.C.) of a Curve to the right; thence run to the right along said Curve, having an interior angle of 90° 16' 32" and a Radius of 50.00 feet, for an Arc distance of 78.809 feet to a point of Tangency (P.T.); thence North 88°41' 24" East, a distance of 2169.370 feet to the Point of Curvature (P.C.) of a Curve to the right; thence to the right along said Curve, having an interior angle of 44° 32' 48" and a Radius of 800.00 feet, and Arc distance of 468.463 feet to the Point of Tangency (P.T.); thence South 46° 48' 51" East, a distance of 102.150 feet to the Point of Intersection with the Northerly line of the existing Right of way of said N.E. 79th Street Causeway; thence in a Southwesterly, Northwesterly, and Westerly direction along the Northerly line of said existing Right of way to the Point of Beginning (P.O.B.), lying and being in North Bay Village, Miami-Dade County, Florida.

METES AND BOUNDS DESCRIPTION OF THE EASTERLY 310 FEET OF THE WESTERLY 2110.00 FEET OF THE ABOVE DESCRIBED PARCEL "A", SAID LAND BEING IDENTICAL TO THE ABOVE DESCRIBED PARCEL.

Commencing at the One-Half Mile Post on the West Line of Section 9, Township 53 South, Range 42 East as shown on the Map of Highway, Right of way proposed N.E. 79th Street Causeway, recorded in Plat Book 28, page 70 of the public records of Miami-Dade County, Florida; thence run N. 88° 41' 24" E., a distance of 1960 feet; thence run North 1° 37' 08" W., a distance of 173.79 feet to the Point of Curvature (P.C.) of a Curve to the right; thence run to the right along said Curve having an Central Angle of 90° 16' 32", a Radius of 50.00 feet for an Arc distance of 78.809 feet to the Point of Tangency (P.T.); thence run N. 88° 41' 24" E., Tangent to the last mentioned Curve, a distance of 2059.73 feet to the Northeast corner of the East 310.00 feet of said Tract "A" and the Point of Beginning (P.O.B.); thence run S. 88° 41' 24" W., along the Northerly Line of Tract "A", a distance of 310.00 feet; thence run S. 1° 37' 08" E., a distance of 231.97 feet to the Northerly Line of the 79th Street Causeway on the Arc of a Circular Curve having a Radius of 687.82 feet; thence run Southerly along the Arc of said Curve along the Northerly Line of the 79th Street Causeway through a Central Angle of 15° 16' 25.6", an Arc distance of 173.36 feet, Chord Bearing being S. 83° 19' 04" E., and Chord being 174.843 feet to a Point of Reverse Curvature (P.R.C.) of a Circular Curve having a Radius of 560.48 feet; thence run Southeasterly through a Central Angle of 19° 07' 18.8", along the Northerly Line of the 79th Street Causeway, an Arc distance of 183.73 feet, Chord Bearing of said Arc being S. 80° 12' 48" E., Chord of 182.843 feet to a Point; thence run N. 1° 37' 08" E., a distance of 406.63 feet to the Point of Beginning (P.O.B.).

Tract "A" contains 98,872 square feet ±, or 2.268 acres ±

TRACT "B" (MARINA LEASE AREA)

THIS IS A "SPECIFIC PURPOSE SURVEY" OF THE MARINA AREA IN BISCAYNE BAY, THE SOUTHERLY LINE OF SAID MARINA AREA BEING CONTIGUOUS WITH THE NORTHERLY LINE OF THE ABOVE DESCRIBED PROPERTY SAID MARINA AREA BEING MORE PARTICULARLY DESCRIBED AS FOLLOWS:

BEGIN AT THE NORTHWEST CORNER OF THE NORTHEAST CORNER OF AFOREMENTIONED TRACT"A", THENCE RUN N 1°37'08" W 86.00', TO THE NORTHEAST CORNER OF THE MARINA LEASE AREA, SAID NORTHEAST CORNER BEING N 84°50'46" W 8,897.91' FROM DNR MON. R-45 HAVING FOR IT'S LOCATION A NAD 1983/90 VALUE OF N551090.91 AND E943706.55, SAID MON. R-45 BEING N 68°12'45" W 945.28' FROM DNR MON. R-46 HAVING FOR IT'S LOCATION A NAD 1983/90 VALUE OF N550155.02 AND E945841.58. THENCE CONTINUING FROM THE AFOREMENTIONED NORTHEAST CORNER OF THE MARDIA LEASE AREA S 88°41'24" W 225.00', THENCE RUN N 1°37'08" W 16.00', THENCE RUN S 88°41'24" W 85.00', THENCE RUN S 1°37'08" E 102.00', TO THE NORTH LINE OF THE UPLAND PARCEL KNOWN AS TRACT "A", THENCE RUN N88°41'24" E 310.00' TO THE POINT OF BEGINNING (POB)

ABOVE DESCRIBED PARCEL CONTAINS 31,620 SQUARE FEET MORE OR LESS, OR 0.843 ACRES MORE OR LESS.

/ALID WITHOUT THE
TACHED TO HEREON. SHEET 1 OF 03

ABBREVIATIONS:

LCE = LIMITED COMMON ELEMENT
RLS = REGISTERED LAND SURVEYOR
PRM = PERMANENT REFERENCE MONUMENT
PCP = PERMANENT CONTROL POINT
Δ = DELTA OR ANGLE OF FEET
BLK = BLOCK OR INCH
CB = CHORD
OHE = OVERHEAD ELECTRIC
CONC = CONCRETE
EAST = EAST
WEST = WEST
RAD. HEAD = RADIUS HEAD
CBS = CONCRETE BLOCK, STUCCO
COMP = COMPUTED
STORY = STORY
POWER = POWER
BUILDING = BUILDING
RADIUS = RADIUS
ARCH = ARCH
DELTA = DELTA
POB = POINT OF BEGINNING
POC = POINT OF COMMENCE
FIR = FIRE
FOUND = FOUND
ELEC = ELECTRIC
ELEVATION = ELEVATION
SEC = SECTION
TWP = TOWNSHIP
RGE = RANGE
MH = MANHOLE
CB = CATCH BASIN
M = MEASURED
BLK = BLOCK
PB = PLAT BOOK
PG = PAGE
DIP = DUCTILE IRON PIPE
RECORD = RECORD
STA = STATION
TOP = TOP OF PIPE
WLP = WOOD LIGHT POLE
MP = METAL POLE
CP = CONCRETE POST
ROW = RIGHT OF WAY
SWEET = SWEET
FPL = FLORIDA POWER AND LIGHT
RAD = RADIUS
MM, OSC = MM, OSC
HYDRANT = HYDRANT
PRC = POINT OF REVERSE CURVATURE
PCC = POINT OF COMPOUND CURVATURE
PC = POINT OF CURVATURE
PT = POINT OF TERMINUS
POI = POINT OF INTERSECTION
WV = WATER VALVE
WM = WATER METER
GV = GATE VALVE
CLF = CHAIN LINK FENCE
SWF = SHADOW WOOD FENCE
WF = WOOD FENCE
MF = METAL FENCE
CLF = CHAIN LINK FENCE
SW = SIDEWALK
CONC = CONCRETE
VF = VINYL FENCE
MEAS REC = MEASURED AND RECORD

FLOOD INFORMATION:

COMMUNITY NUMBER ... 125154
PANEL NUMBER ... 0182
SUFFIX ... J
DATE OF FIRM ... 9-11-09
FIRM ZONE ... AE, AE
BASE FLOOD ELEVATION ... 8.00', 9.00'

DATE FIELD WORK ... 11-16-2007
DATE DRAFTING ... 11-19-2007
DATE SIGNED AND SEALED ... 11-29-2007
REVISED FOR COMMENTS ... 04-30-2009

SYMBOL LEGEND:

- CENTER LINE
- CONC. POLE
- TREE
- LIGHT POLE
- ELECTRIC BOX
- TRAFFIC SIGNAL BOX
- FIRE HYDRANT
- STORM SEWER/CATCH BASIN
- WATER METER
- SIGN
- TELEPHONE BOX
- WATER VALVE
- PALM
- ELEVATIONS

ZURWELLE-WHITTAKER INC ESTAB. 1926
CONSULTING ENGINEERS AND SURVEYORS
95 N.E. 50TH TERRACE, MIAMI, FLORIDA, 33138 PH: (305) 534-4668 FAX (305) 531-4582
LICENSE BUSINESS NO. 0000106 WWW.ZURWELLE-WHITTAKER.COM

FRANK L. NUNEZ, JR.
PROFESSIONAL SURVEYOR AND MAPPER
REGISTERED NO. 4580
STATE OF FLORIDA

PROJECT: 1819 79TH Street. Causeway
MIAMI BEACH, FL 33141

SHEET: SITE PLAN

DRAWN: LAM
REVISED: EAM
SCALE: N/A
DATE: 30 APRIL 2009
FILE: Z:\LAND PROJECTS\1819_79St CAUSEWAY\DWG\1819_79St 10-07-2009.DWG

Attachment A
Page 8 of 17 Pages
SSLL No. 130010996

57

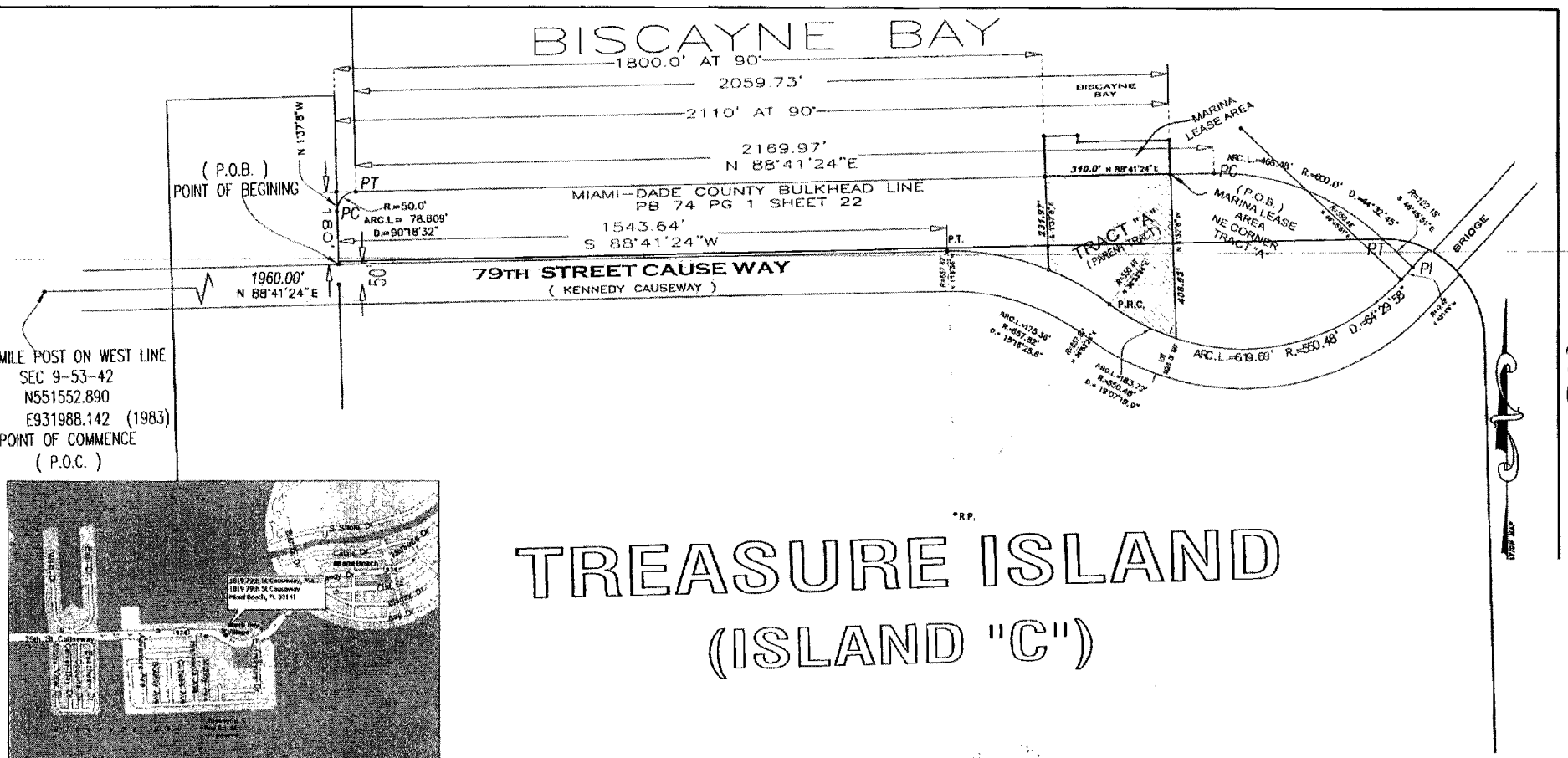

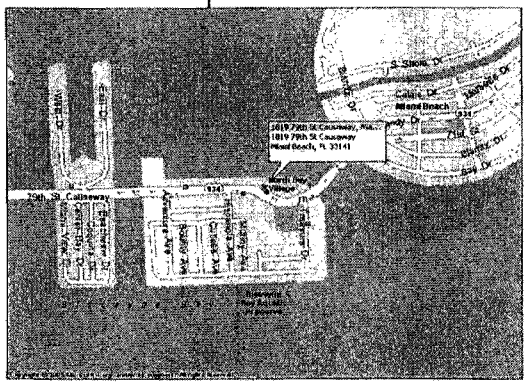

LOCATION MAP (N.T.S.)

NOTE: THIS DOCUMENT IS NOT VALID WITHOUT COMPLETE 03 PAGES ATTACHED TO HE SHEET 2 OF 03

SCALE: 1"=300'	DRAWN: LAM	SHEET: SITE PLAN	PROJECT: 1819 79TH Street. Causeway MIAMI BEACH, FL 33141
DATE: 30 APRIL 2009	REVISED: EAM		
FILE: Z:\LAND PROJECTS 3\1819_79ST_CAUSEWAY\DWG\1819_79ST 05072009.DWG			

STATE OF FLORIDA
FRANK L. NUNEZ JR.
PROFESSIONAL SURVEYOR AND MAPPER REG. NO. 5382
STATE OF FLORIDA

ZURWELLE-WHITTAKER INC ESTAB. 1926
CONSULTING ENGINEERS AND SURVEYORS
95 N.E. 80TH TERRACE, MIAMI, FLORIDA, 33138 PH: (305) 534-4668 FAX (305) 531-4589
LICENSE BUSINESS NO. 0000166 WWW.ZURWELLE-WHITTAKER.COM

Attachment A
Page 2 of 17 Pages
SSLL No. 1300106996

NOTE: THIS DOCUMENT IS NOT VALID WITHOUT THE COMPLETE 03 PAGES ATTACHED TO HEREON.
SHEET 3 OF 03

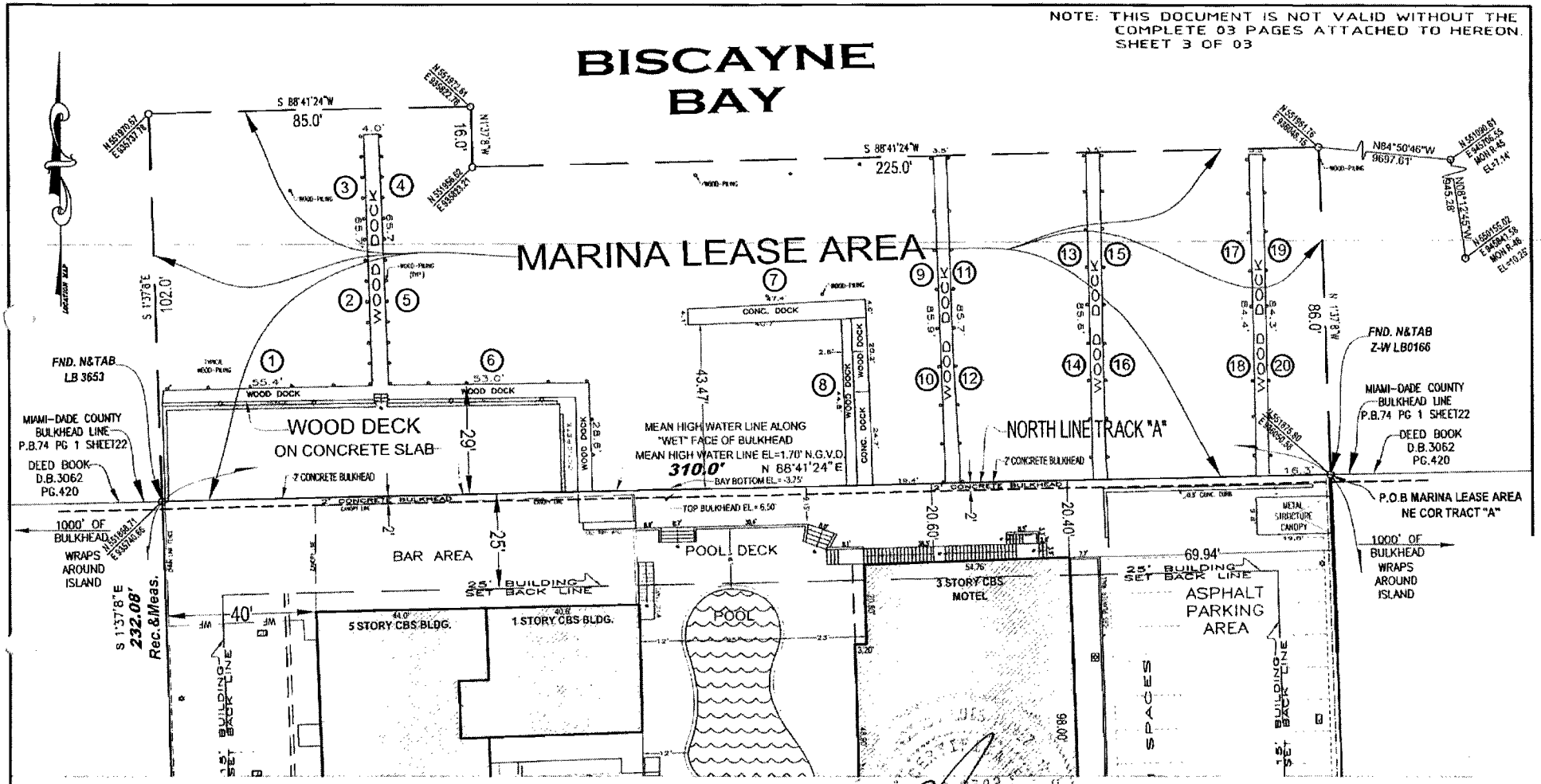

SCALE: 1"=30'	DRAWN: LAM	SHEET: SITE PLAN	PROJECT: 1819 79TH Street. Causeway MIAMI BEACH, FL 33141	STATE OF FRANK L. NUNEZ JR. PROFESSIONAL SURVEYOR AND MAPPER REG. NO. 6382 STATE OF FLORIDA	ZURWELLE-WHITTAKER INC. ESTAB. 1926 CONSULTING ENGINEERS AND SURVEYORS 95 N.E. 80TH TERRACE, MIAMI, FLORIDA, 33138 PH: (305) 534-4668 FAX (305) 534-4589 LICENSE BUSINESS NO. 0000166 WWW.ZURWELLE-WHITTAKER.COM
DATE: September 4, 2007	REVISED: EAM				
FILE: Z:\LAND PROJECTS 3\1819_79ST_CAUSEWAY\DWG\1819_79ST 05072009.DWG					

Attachment A
Page 10 of 17 Pages
SSLL No. 130010996

.50 OFF REC 131 PG 3851 IRA ZAGER ESQUIRE Second Floor, Coral G... 1541 SUN... CORAL GABLES, FLORIDA 331... .45

SPECIAL WARRANTY DEED RAMCO FORM 36

Warranty Deed

This Indenture, *Made the* 17 *day of* December *, A. D. 1986*,

BETWEEN The Inn On The Bay, a Florida General Partnership,

of the County of Dade *, and State of* Florida, party *, of the first part, and*

The Inn On The Bay, Ltd., a Florida Limited Partnership

whose permanent address is 4155 Northwest 24th Street, Miami *, of the County of* Dade *, and State of* Florida *, of the second part,*

Witnesseth, *That, the said party of the first part, for and in consideration of the sum of* Ten ($10.00)---------- *Dollars, lawful money of the United States of America, to* it *in hand paid by the said party of the second part, at or before the ensealing and delivery of these presents, the receipt whereof is hereby acknowledged,* has *granted, bargained, sold, aliened, remised, released, conveyed and confirmed, and by these presents* does *grant, bargain, sell alien, remise, release, convey and confirm unto the said party of the second part, and* its successors ~~heirs~~ *and assigns forever, all the following piece, parcel or tract of land, situate, lying and being in the County of* Dade *, State of* Florida *, and more particularly described as follows:*

SEE EXHIBIT "A" ATTACHED HERETO AND MADE A PART HEREOF FOR LEGAL DESCRIPTION.

SEE AFFIDAVIT OF CHARLES G. GRENTNER ATTACHED HERETO AND MADE A PART HEREOF.

SUBJECT TO: Restrictions, conditions, reservations, limitations, easements of record, if any, applicable zoning ordinances and taxes for the year 1986 and subsequent years.

SUBJECT TO: Existing First Mortgage in favor of Chase Federal Savings and Loan Association which mortgage was recorded on February 26, 1979 in Official Records Book 10311, Page 1425 of the Public Records of Dade County, Florida, which the party of the second part assumes and agrees to pay; also

SUBJECT TO: Existing Second and Third Mortgages.

This conveyance is to convert a General Partnership into a Limited Partnership and there is no shifting of economic burden; therefore, this conveyance is exempt from documentary stamps tax per the advise of Bill Hagen of the Department of Revenue,/*

Together *with all and singular the tenements, hereditaments and appurtenances thereunto belonging or in anywise appertaining, and the reversion and reversions, remainder and remainders, rents, issues and profits thereof, and also all the estate, right, title, interest, dower and right of dower, separate estate, property, possession, claim and demand whatsoever, as well as in equity, of the said party of the first part, of, in and to the same, and every part and parcel thereof, with the appurtenances.*

To Have and To Hold *the above granted, bargained and described premises, with the appurtenances, unto the said party of the second part,* its successors *and assigns, to own proper use, benefit and behoof forever.*

And the said party of the first part, for itself *and for* its/successors and assigns ~~heirs, executors and administrators~~, does *covenant, promise and agree to and with the said part of the second part,* its successors *and assigns, that the said party of the first part, at the time of the ensealing and delivery of these presents,* is *lawfully seized of and in all and singular the above granted, bargained and described premises, with the appurtenances, and* hs *good right, full power and lawful authority to grant, bargain, sell and convey the same in manner and form aforesaid. And the said party of the second part,* its successors ~~heirs~~ *and assigns, shall and may at all times hereafter peaceably and quietly have, hold, use, occupy, possess and enjoy the above granted premises and every part and parcel thereof, with the appurtenances, without any let, suit, trouble, molestation, eviction or disturbance of the said party of the first part,* its successors *or assigns, or of any other person or persons lawfully claiming or to claim the same, by, through and under the grantor herein.*

/*Tallahassee, Florida.

.45

Attachment B
Page 11 of 17 Pages
SSLL No. 130010996

60

W 4/12-18-86

.50

And the said party of the first part, for itself and for its successors and assigns, warrants the above described and hereby granted and released premises, and every part and parcel thereof, with the appurtenances, unto the said party of the second part, its successors and assigns, against the said party of the first part, its successors and against all and every person or persons whomsoever lawfully claiming or to claim the same, by, through and under the grantor herein, shall and will warrant and by these presents forever defend.

IN WITNESS WHEREOF, the said party of the first part has hereunto set his hand and seal the day and year first above written.

Signed, sealed and delivered in the presence of:

_____

_____

(CORPORATE SEAL)

The Inn On The Bay, a Florida General Partnership

BY: _____ (SEAL)
CHARLES G. GRENTNER, Partner

_____ (SEAL)
KATHERINE M. GRENTNER, Partner

_____ (SEAL)
LYNN GRENTNER, Partner

The Inn On The Bay, Inc., a Florida Corporation, Partner

BY: _____
CHARLES E. GRENTNER, President

SEE ATTACHED SIGNATURE PAGES FOR THE SIGNATURES OF WILLIAM P. LYNCH AND GAYE BEASLEY, WHICH ARE ATTACHED HERETO AND MADE A PART HEREOF.

STATE OF FLORIDA)
:S.S.
COUNTY OF DADE)

On this day personally appeared before me, Charles G. Grentner, Katherine M. Grentner and Lynn Grentner, to me well known and known to me to be the individuals described in and who executed the foregoing deed of conveyance, and acknowledged that they executed the same for the purpose therein expressed, whereupon it is prayed that the same may be recorded.

IN WITNESS WHEREOF, I have hereunto affixed my hand and official seal this 17 day of December, 1986.

_____
NOTARY PUBLIC, State of Florida at Large

My Commission Expires:

_____

STATE OF FLORIDA)
:S.S.
COUNTY OF DADE)

I HEREBY CERTIFY that on this day, before me, an officer duly authorized in the State and County aforesaid to take acknowledgments, personally appeared Charles E. Grentner well known to me to be the President of the corporation named as grantor in the foregoing deed, and that he severally acknowledged executing the same for the purposes therein expressed as the act and deed of said corporation and in the capacity therein stated.

Witness my hand and official seal in the County and State last aforesaid this 17 day of December, 1986.

_____
NOTARY PUBLIC, State of Florida at Large

My Commission Expires:

_____

OFF REC 3119 PG 3853

SIGNATURE PAGE FOR
SPECIAL WARRANTY DEED TO
THE INN ON THE BAY, LTD.
****

Executed this 18 day of December, 1986, at

Tampa (City), Florida (State).

WITNESS:

Barbara J. Morgis

Allen F. Agnew

William P. Lynch

WILLIAM P. LYNCH, Partner

This Signature Page is to be attached to and is made a part of the Special Warranty Deed to The Inn On The Bay, Ltd.

STATE OF FLORIDA)
: S.S.
COUNTY OF Hillsborough)

SWORN TO BEFORE ME, the undersigned authority, on this day personally appeared WILLIAM P. LYNCH, known to me to be the person described in and who executed the foregoing instrument and acknowledged before me that (s)he executed the same for the purposes stated therein.

WITNESS my hand and official seal in the County and State last aforesaid, this 18 day of December, 1986.

LAURITA C. SMALL NOTARY PUBLIC STATE OF FLORIDA

My Commission Expires:
Notary Public, State Of Florida At Large
My Commission Expires Nov. 1, 1988
Bonded By SAFECO Insurance Company of America

Laurita C. Small

NOTARY PUBLIC, State of FLORIDA at Large

OFF REC 13119 PG 3854

SIGNATURE PAGE FOR
SPECIAL WARRANTY DEED TO
THE INN ON THE BAY, LTD.
****

Executed this 17 day of December, 1986, at Washington, D.C., District of Columbia.

WITNESS:

Darris D. Plume

Julie R Stewart

Gaye Beasley
GAYE BEASLEY, Partner

This Signature Page is to be attached to and is made a part of the Special Warranty Deed to The Inn On The Bay, Ltd.

CITY OF WASHINGTON, D.C.)
: S.S.
DISTRICT OF COLUMBIA)

SWORN TO BEFORE ME, the undersigned authority, on this day personally appeared GAYE BEASLEY, known to me to be the person described in and who executed the foregoing instrument and acknowledged before me that (s)he executed the same for the purposes stated therein.

WITNESS my hand and official seal in the City and District last aforesaid, this 17 day of December, 1986.

My Commission Expires:
October 31, 1991

Kathleen M. Hughes
NOTARY PUBLIC

NOTARY PUBLIC DISTRICT OF COLUMBIA

EXHIBIT "A" TO SPECIAL WARRANTY DEED
TO THE INN ON THE BAY, LTD., A FLORIDA LIMITED PARTNERSHIP
****

LEGAL DESCRIPTION

The Easterly 310 feet of the Westerly 2110 feet of the following described tract of land, as measured along a line running at right angles to the Westerly line of said tract:

Commencing at the one-half mile post on the West line of Section 9, Township 53 South, Range 42 East, as shown on the map of Highway Right-of-Way of proposed N.E.79th Street Causeway, which same is recorded in Plat Book 25, at Page 70 of the Public Records of Dade County, Florida, run North 88 degrees 41 minutes 24 seconds East 1960.00 feet, then North 1 degree 37 minutes 08 seconds West 50.00 feet to the Point or place of beginning of the hereinafter described tract of land: thence continue North 1 degree 37 minutes 08 seconds West 129.730 feet to the point of curve of a curve to the right; thence to the right along said curve, having an interior angle of 90 degrees 18 minutes 32 seconds and a radius of 50.00 feet for an arc distance of 78.809 feet to a point of tangency; thence North 88 degrees 41 minutes 24 seconds East 2169.97 feet to the point of curvature of a curve to the right; thence to the right along said curve, having an interior angle of 44 degrees 32 minutes 45 seconds and a radius of 600. feet for an arc distance of 466.483 feet to a point of tangency, thence South 46 degrees 45 minutes 51 seconds East 102.180 feet to the point of intersection with the northerly line of the existing right-of-way of said NE 79th Street Causeway; thence in a Southwesterly, Northwesterly and Westerly direction along the Northerly line of said existing right-of-way to the Point of Beginning. Lying and being in North Bay Village, Dade County, Florida.

OFF REC 13119 PG 3856

AFFIDAVIT TO SPECIAL WARRANTY DEED TO
THE INN ON THE BAY, LTD., A FLORIDA LIMITED PARTNERSHIP
****

STATE OF FLORIDA)
: S.S.
COUNTY OF DADE)

Personally appeared before me the undersigned authority, CHARLES G. GRENTNER, who being duly sworn, deposes and says he is one of the Partners of The Inn On The Bay, a Florida General Partnership; that all of the Partners are Gaye Beasley, Charles G. Grentner, Katherine M. Grentner, Lynn Grentner, William P. Lynch, and The Inn On The Bay, Inc., a Florida Corporation; that all of the Partners of the said Partnership executed the conveyance, and had the authority to do so and that the conveyance was made to convert the General Partnership into a Florida Limited Partnership.

CHARLES G. GRENTNER

SWORN to and SUBSCRIBED before me this 17 day of December, 1986.

My Commission Expires:

NOTARY PUBLIC, State of Florida
At Large

NOTARY PUBLIC STATE OF FLORIDA AT LARGE

RECORDED IN OFFICIAL RECORDS BOOK
OF DADE COUNTY, FLORIDA.
RECORD VERIFIED
RICHARD P. BRINKER
CLERK CIRCUIT COURT

State of Florida

Department of State

I certify from the records of this office that a limited partnership was organized under the laws of the State of Florida, filed on December 18, 1986, and that an amendment was filed on July 6, 1994, changing its name from THE INN ON THE BAY, LTD. to INN ON NORTH BAY, LTD..

The document number of this limited partnership is A23848.

I further certify that said limited partnership has paid all fees due this office through December 31, 1998, and its status is active.

Given under my hand and the
Great Seal of the State of Florida
at Tallahassee, the Capitol, this the
Ninth day of June, 1998

GREAT SEAL OF THE STATE OF FLORIDA
IN GOD WE TRUST

CR2EO22 (2-95)

Sandra B. Mortham

Sandra B. Mortham
Secretary of State

Attachment D
Page 9 of 9 Pages
SSLL No. 130010996

RECORDED IN OFFICIAL RECORDS BOOK
OF DADE COUNTY, FLORIDA
RECORD VERIFIED
HARVEY RUVIN
CLERK CIRCUIT COURT

STATE OF FLORIDA, COUNTY OF DADE
I HEREBY CERTIFY [illegible] the original filed [illegible] 2nd of Nov [illegible] 09
WITNESS my hand and Official Seal
HARVEY RUVIN, CLERK of Circuit and County Courts
By [illegible] D.C.

Attachment B
Page 17 of 17 Pages
SSLL No. 130010996

66

Attachment F

Project Report

PROJECT REPORT
CLASS I PERMIT APPLICATION NO. 2008-CLI - PER-00322

Class I Permit Application by Inn on North Bay, Ltd to Reconstruct a Non-Water Dependant Concrete Deck for a Dining Area Over Tidal Waters that is Associated with an Upland Restaurant, and Replace an Existing Docking Facility on Biscayne Bay

Date: December 4, 2009

Staff's recommendation of approval for the above-referenced permit application is based on the applicable evaluation factors under Section 24-48.3 of the Code of Miami-Dade County, Florida. The following is a summary of the proposed project with respect to each applicable evaluation factor:

1. **Potential Adverse Environmental Impact** – The potential for any adverse environmental impacts from the replacement of the non-water-dependent concrete deck structure and the docking facility has been minimized. The concrete deck is not reasonably expected to adversely affect surface water quality or create environmental impacts with the exception of temporary impacts during demolition and reconstruction of the structure. The replacement of the existing docking facility will result in minor water quality impacts and shading of sparse seagrass resources within the original footprint of the facility; however, the project has been designed to remain within the same footprint to avoid new impacts to resources. In order to mitigate for environmental impacts to natural resources associated with this project, the applicant has agreed to provide a contribution to the Biscayne Bay Environmental Enhancement Trust Fund (BBEETF) in the amount of $6,840.00.

   The proposed project is not located within an area designated as essential manatee habitat for the West Indian Manatee (*Trichechus manatus*) by the Miami-Dade County Manatee Protection Plan (MDCMPP). However, the Class I permit will require that all standard manatee construction permit conditions shall be followed during all in-water construction operations. Additionally, the Class I permit will have conditions to minimize turbidity and protect rare, threatened, and endangered species.

2. **Potential Cumulative Adverse Environmental Impact** – The proposed project is not reasonably expected to have cumulative adverse environmental impacts.

3. **Hydrology** - The proposed project, as designed, is not reasonably expected to adversely affect surface water drainage or retention of stormwater.

4. **Water Quality** – The proposed project is expected to temporarily affect surface water quality during the reconstruction of the facility. However, these impacts will be minimized by the implementation of proper turbidity control devices.

5. **Wellfields** – Not applicable.

6. **Water Supply** – Not applicable.

7. **Aquifer Recharge** – Not applicable.

8. **Aesthetics** – The proposed project is designed to be aesthetically compatible with the surrounding area and is not reasonably expected to have any negative aesthetic impacts. However, during construction operations there may be temporary aesthetic impacts related to the presence of machinery and equipment associated with these construction activities.

9. **Navigation** – The proposed project is not reasonably expected to adversely affect navigation.

10. **Public Health** - The proposed project is not reasonably expected to adversely affect public health.

11. **Historic Values** - The proposed project is not reasonably expected to adversely affect historic values.

12. **Archaeological Values** - The proposed project is not reasonably expected to adversely affect archaeological values.

13. **Air Quality** – The proposed project is not reasonably expected to adversely affect air quality.

14. **Marine and Wildlife Habitats** – The proposed project will result in minimal temporary disturbances to marine and wildlife habitats during construction operations. The replacement of the existing docking facility will result in shading impacts to sparse seagrass habitat. However, the project has been designed to remain within the same footprint to avoid new impacts to resources. In order to mitigate for environmental impacts to natural resources associated with this project, the applicant has agreed to provide a contribution to the BBEETF in an amount of $6,840.00.

    The proposed project is not located within an area designated as essential manatee habitat for the West Indian Manatee (*Trichechus manatus*) by the Miami-Dade County Manatee Protection Plan (MDCMPP). However, the Class I permit will require that all standard manatee construction permit conditions shall be followed during all in-water construction operations. Additionally, the Class I permit will have conditions to minimize turbidity and protect rare, threatened, and endangered species.

15. **Wetland Soils Suitable for Habitat** – The proposed project does not involve any work in wetland soils.

16. **Floral Values** – The proposed project will result in minimal impacts to marine floral values. An in-water benthic survey revealed sparse seagrass habitat within the project area. The docking facility will result in shading impacts to seagrass resources within the areas associated with the docking facility. However, the project has been designed to remain within the same footprint to avoid new impacts to resources. In order to mitigate for environmental impacts to natural resources associated with this project, the applicant has agreed to provide a contribution to the BBEETF in an amount of $6,840.00.

17. **Fauna Values** – The proposed project is not reasonably expected to adversely affect marine fauna. The proposed project will cause temporary disturbances of the substrate during removal and re-installation of the marine facility. However, these impacts will be minimized through the implementation of proper turbidity control devices.

    The proposed project is not located within an area designated as essential manatee habitat for the West Indian Manatee (*Trichechus manatus*) by the Miami-Dade County Manatee Protection Plan (MDCMPP). However, the Class I permit will require that all standard manatee construction permit conditions shall be followed during all in-water construction operations. Additionally, the Class I permit will have conditions to minimize turbidity and protect rare, threatened, and endangered species.

18. **Rare, Threatened and Endangered Species** – The proposed work is not reasonably expected to adversely affect marine and wildlife habitats. The proposed project is not located within an area designated by the MDCMPP as essential manatee habitat for the West Indian Manatee. However, the Class I permit will require that all standard manatee construction permit conditions shall be followed during all in-water construction

operations. Additionally, the Class I permit will have conditions to minimize turbidity and protect rare, threatened, and endangered species.

19. **Natural Flood Damage Protection** - The proposed project is not reasonably expected to adversely affect surface water drainage or retention of stormwater.

20. **Wetland Values** – The proposed project does not involve dredging or filling of wetlands.

21. **Land Use Classification** – Pursuant to Section 24-48.2(II)(A)(7), of the Code of Miami-Dade County, Florida, a substantiating letter shall be submitted stating that the proposed project does not violate any zoning laws. Said letter will be submitted after the approval by the Board of County Commissioners and prior to the issuance of a Class I permit.

22. **Recreation** - The proposed project does not conflict with the recreation element of the Miami-Dade County Comprehensive Development Master Plan and recreation element of the Biscayne Bay Management Plan.

23. **Other Environmental Values Affecting the Public Interest** – The proposed project is not reasonably expected to adversely affect environmental values affecting the public interest. The proposed work will occur on sovereign submerged lands within an area that has been leased to the applicant by the Board of Trustees of the Internal Improvement Trust Fund of the State of Florida.

24. **Conformance with Standard Construction Procedures and Practices and Design and Performance Standards** – The proposed project complies with the standard construction procedures and practices and design and performance standards of the applicable portions of the following:

    a) Miami-Dade County Public Works Manual
    b) Biscayne Bay Management Plan (Sections 33D-1 through 33D-4 of the Code of Miami-Dade County)
    c) Chapter 33B of the Code of Miami-Dade County

25. **Comprehensive Environmental Impact Statement (CEIS)** - In the opinion of the Director, the proposed project is not reasonably expected to result in significant adverse environmental impacts or cumulative adverse environmental impacts. Therefore, a CEIS was not required by DERM to evaluate the project.

26. **Conformance with All Applicable Federal, State and Local Laws and Regulations** The proposed project is in conformance with the following applicable State, Federal and local laws and regulations:

    a) Chapter 24 of the Code of Miami-Dade County
    b) Florida Department of Environmental Protection (submerged lands approval is required)
    c) United States Clean Water Act (Army Corps of Engineers permit is required)

27. **Conformance with the Miami-Dade County Comprehensive Development Master Plan (CDMP)** - In the opinion of DERM, the proposed project is in conformance with the CDMP. The following is a summary of the proposed project as it relates to the CDMP:

LAND USE ELEMENT I:

Objective 2/Policy 2A - Level of Service. The proposed project does not involve new or significant expansion of existing urban land uses.

Objective 3/Policies 3A, 3B, 3C - Protection of natural resources and systems. – The proposed project is consistent with the Conservation and Coastal Management Elements of the CDMP. The project is compatible with surrounding land uses in Biscayne Bay and does not involve development in the Big Cypress area of Critical State concern or the East Everglades.

TRANSPORTATION ELEMENT II

Aviation Subelement/Objective 9 - Aviation System Expansion - There is no aviation element to the proposed project.

Port of Miami River Subelement/Objective 3 - Minimization of impacts to estuarine water quality and marine resources. The proposed project is not located within the Miami River.

CONSERVATION, AQUIFER RECHARGES AND DRAINAGE ELEMENT IV:

Objective 3/Policies 3A, 3B, 3D - Wellfield protection area protection. - The proposed project is not located within a wellfield protection area.

Objective 3/Policy 3E - Limestone mining within the area bounded by the Florida Turnpike, the Miami-Dade/Broward Levee, N.W. 12 Street and Okeechobee Road. - The proposed project is not located within this area.

Objective 4/Policies 4A, 4B, 4C - Water storage, aquifer recharge potential and maintenance of natural surface water drainage. - The proposed project will not adversely affect water storage, aquifer recharge potential or natural surface water drainage. The proposed project does not involve positive drainage of wetland area and will not affect water storage or aquifer recharge potential.

Objective 5/Policies 5A, 5B, 5F - Flood protection and cut and fill criteria. – The proposed project does not compromise flood protection, involve filling for development purposes, and is not related to cut and fill activities.

Objective 6/Policy 6A - Areas of highest suitability for mineral extraction. - The proposed project is not located in an area proposed or suitable for mineral extraction.

Objective 6/Policy 6B - Guidelines for rock quarries for the re-establishment of native flora and fauna. - The proposed project does not involve the dredging of a rock quarry.

Objective 6/Policy 6D - Suitable fill material for the support of development. – The proposed project does not involve filling for the purposes of development.

Objective 7/Policy 7A - No net loss of high quality, relatively unstressed wetlands. – The proposed project will not result in a net loss of any such wetlands.

Objective 9/Policies 9A, 9B, 9C - Protection of habitat critical to Federal or State-designated threatened or endangered species. – The proposed project is not located within an area designated by the MDCMPP as essential manatee habitat for the West Indian Manatee. However, the Class I permit will require that all standard manatee construction permit conditions shall be followed during all in-water construction operations. Additionally, the Class I permit will have conditions to minimize turbidity and protect rare, threatened, and endangered species.

COASTAL MANAGEMENT ELEMENT VII:

Objective 1/Policy 1A - Tidally connected mangroves in mangrove protection areas – There are no mangroves in the project area and the project is not located within a designated "Mangrove Protection Area."

Objective 1/ Policy 1B - Natural surface flow into and through coastal wetlands. – The project will not affect natural surface flow into and through coastal wetlands.

Objective 1/ Policy 1C - Elevated boardwalk access through mangroves. – The project does not involve access through mangroves.

Objective 1/Policy 1D - Protection and maintenance of mangrove forests and related natural vegetational communities. - The proposed project does not involve work in mangrove forests, coastal hammock, or other natural vegetational communities.

Objective 1/Policy 1E - Mitigation for the degradation and destruction of coastal wetlands. Monitoring and maintenance of mitigation areas. – The proposed project does not involve the degradation and destruction of coastal wetlands and therefore does not involve monitoring of mitigation for impacts to coastal wetlands.

Objective 1/Policy 1G - Prohibition on dredging or filling of grass/algal flats, hard bottom or other viable benthic communities, except as provided for in Chapter 24 of the Code of Miami-Dade County, Florida. – The project does not involve the dredging or filling of grass/algal flats, hard bottom or other viable benthic communities.

Objective 2/Policies 2A, 2B - Beach restoration and renourishment objectives. - The proposed project does not involve beach restoration or renourishment.

Objective 3/Policies 3E, 3F - Location of new cut and spoil areas for proper stabilization and minimization of damages. - The proposed project does not involve the development or identification of new cut or spoil areas.

Objective 5/Policy 5B - Existing and new areas for water-dependant uses. - The proposed project includes reconstruction of a docking facility.

Objective 5/Policy 5D - Consistency with Chapter 33D, Miami-Dade County Code (shoreline access, environmental compatibility of shoreline development) – The Shoreline Development Review Committee has evaluated the proposed project and determined that the thresholds for review under the Shoreline Ordinance do not apply and the proposed project is not subject to shoreline development review.

Objective 5/Policy 5F - The siting of water dependant facilities. - The proposed project does not involve the creation of any new water dependant facilities.

28. **Conformance with Chapter 33B, Code of Miami-Dade County** (East Everglades Zoning Overlay Ordinance) – The proposed project is not located within the East Everglades Area.

29. **Conformance with Miami-Dade County Ordinance 81-19** (Biscayne Bay Management Plan Sections 33D-1 through 33D-4 of the Code of Miami-Dade County) - The proposed project is consistent with the Biscayne Bay Management Plan.

30. **Conformance with the Miami-Dade County Manatee Protection Plan -** The proposed work is not reasonably expected to adversely affect marine and wildlife habitats. The proposed project is not located within an area designated as essential manatee habitat for the West Indian Manatee (*Trichechus manatus*) by the Miami-Dade County Manatee Protection Plan (MDCMPP). However, the Class I permit will require that all standard manatee construction permit conditions shall be followed during all in-water construction operations. Additionally, the Class I permit will have conditions to minimize turbidity and protect rare, threatened, and endangered species.

31. **Consistency with Miami-Dade County Criteria for Lake Excavation** – The proposed project does not involve lake excavation.

32. **Municipality Recommendation** – Pursuant to Section 24-48.2(II)(A)(7), Code of Miami-Dade County, Florida, a substantiating letter shall be submitted stating that the proposed project does not violate any zoning laws. Said letter will be submitted after the approval by the Board of County Commissioners and prior to the issuance of the Class I permit.

33. **Coastal Resources Management Line** - A coastal resources management line was not required for the proposed project, pursuant to Section 24-48.2(II)(A)(10)(b) of the Code of Miami-Dade County, Florida.

34. **Maximum Protection of a Wetland's Hydrological and Biological Functions** – The proposed project is not expected to impact wetland hydrological and biological functions.

35. **Class I Permit Applications Proposing to Exceed the Boundaries Described in Section D-5.03(2)(a) of the Miami-Dade County Public Works Manual**

    i. **Whether the proposed exceedance is the minimum necessary to avoid seagrasses or other valuable environmental resources** – The proposed project was designed to remain within the same footprint to avoid new impacts to resources.
    ii. **Whether the proposed exceedance is the minimum necessary to achieve adequate water depth for mooring of a vessel** – The proposed project could be reconfigured in such a way that it would not exceed the boundary; however, that could result in additional impacts to resources.
    iii. **Whether the applicant has provided notarized letters of consent to DERM from adjoining riparian property owners** – No letters of consent from adjoining riparian property owners have been submitted to DERM.
    iv. **Whether any letters of objection from adjoining riparian property owners were received by DERM** – No letters of objection from adjoining riparian property owners were received by DERM.

The proposed project was also evaluated for compliance with the standards contained in Section 24-48.3(2),(3), and (4) of the Code of Miami-Dade County, Florida. The following is a summary of how the standards relate to the proposed project:

24-48.3 (2) Dredging and Filling for Class I Permit - The proposed project does not involve dredging and filling activities.

24-48.3 (3) Minimum Water Depth Required for Boat Slips Created by the Construction or Placement of Fixed or Floating Docks and Piers, Piles and Other Structures Requiring a Permit Under Article IV, Division 1 of Chapter 24 of the Code of Miami-Dade County - The proposed project is consistent with the water depth requirements set forth in Section 24-48.3(3) of the Code of Miami-Dade County

24-48.3 (4) Clean Fill in Wetlands – The proposed project does not involve placing clean fill in wetlands.

BASED ON THE FOREGOING, IT IS RECOMMENDED THAT A CLASS I PERMIT BE APPROVED.

Lisa. M. Spadafina, Manager
Coastal Resources Section

Allison Hill, Biologist I
Coastal Resources Section