Memorandum

MIAMI-DADE COUNTY

Date: March 2, 2010

To: Honorable Chairman Dennis C. Moss and Members, Board of County Commissioners

Agenda Item No. 5(D)

From: George M. Burgess
County Manager

Subject: Resolution Relating to an Application by the Florida Power & Light Company for a Class I Permit to Install Surface Water and Groundwater Monitoring Wells and Access Platforms within the Tidal Waters of Miami-Dade County

---

Attached, please find for your consideration an application by the Florida Power & Light Company for a Class I permit. Also attached is the recommendation of the Director of the Department of Environmental Resources Management and a Resolution seeking the Board's approval of the aforesaid Class I permit.

Assistant County Manager

Memorandum

Date: February 19, 2010

To: George M. Burgess
County Manager

From: Carlos Espinosa, PE, Director
Environmental Resources Management

Subject: Resolution Relating to an Application by the Florida Power & Light Company for a Class I Permit to Install Surface Water and Groundwater Monitoring Wells and Access Platforms within the Tidal Waters of Miami-Dade County

---

Recommendation
I have reviewed the attached Class I permit application by the Florida Power & Light Company. Based upon the applicable evaluation factors set forth in Section 24-48.3 of the Code of Miami-Dade County, Florida, I recommend that the Board of County Commissioners (Board) approve the issuance of a Class I permit for the reasons set forth below.

Scope
The project sites are located in Biscayne Bay and adjacent to the Cooling Canal System in the vicinity of the Turkey Point Nuclear Power Plant, Miami-Dade County, Florida, in Commission District 9.

Fiscal Impact/Funding Source
Not applicable.

Track Record/Monitor
Not applicable.

Background
The subject Class I permit application involves the installation of surface water stations and groundwater monitoring wells and access platforms within tidal waters in Miami-Dade County, Florida. The proposed project is required to be reviewed and approved by the Board at a public hearing because the scope of work is not specifically referenced in Section 24-48.2 of the Code of Miami-Dade County as work that can be processed administratively with a short form application. Therefore, a standard form application including a public hearing is required.

The project sites are located within and adjacent to southern Biscayne Bay and Card Sound in the vicinity of the Turkey Point Power Plant (see Attachment B). The applicant, Florida Power & Light Company (FPL), has been granted a certification by the Florida Department of Environmental Protection (FDEP) for an uprate project consisting of modifications to the existing Nuclear Units 3 and 4. This uprate project is not related to FPL's proposal to construct additional nuclear reactors at the Turkey Point Power Plant.

The FDEP uprate certification requires the establishment of a monitoring program for ecological conditions, surface water and groundwater in the vicinity of the Turkey Point Power Plant. To meet this requirement, the applicant is proposing to install a series of groundwater monitoring wells with access platforms and surface water monitoring stations. The data collected from this monitoring program will be used to assess environmental impacts associated with the power plant and the uprate project.

The project involves the installation of three (3) groundwater monitoring stations and five (5) surface water monitoring stations located within Biscayne Bay and Card Sound, and two (2) surface water monitoring stations within canals adjacent to the Turkey Point Cooling Canal System. Construction of the groundwater monitoring stations involves the drilling of boreholes for installation of a cluster of three (3) monitoring wells at each station that will extend into the Biscayne Aquifer. Access platforms will be constructed at each of the three (3) stations and will be used to house the monitoring equipment and facilitate data collection. The surface water monitoring stations within Biscayne Bay will consist of a data recorder anchored to the bay bottom. The surface water stations within the canals will be comprised of monitoring equipment secured to an access platform. Based on the water quality results collected, the installation of additional monitoring stations may be necessary. However, the applicant will be required to obtain modifications to the Class I permit and provide additional authorizations from FDEP and Biscayne National Park (BNP) for use of the submerged lands if the installation of one or more additional stations becomes necessary.

The project sites are located on submerged lands owned or managed by the Board of Trustees of the Internal Improvement Trust Fund of the State of Florida, and by BNP. The applicant has worked closely with the South Florida Water Management District, DERM, FDEP, the United States Army Corps of Engineers, the United States Coast Guard, and BNP to design and site the proposed monitoring stations. The installation of the wells will result in minimal environmental impacts. For any unavoidable adverse environmental impacts resulting from the installation of the stations or related construction operations, the applicant has agreed to provide a payment to the Biscayne Bay Environmental Enhancement Trust Fund to be used to mitigate such impacts.

The proposed project sites are not located within areas identified by the Miami-Dade County Manatee Protection Plan as essential manatee habitat for the West Indian Manatee. However, the Class I permit will require that all standard construction permit conditions regarding manatees be followed during all in-water construction operations.

The proposed project has been designed in accordance with all relevant Miami-Dade County coastal construction criteria and is consistent with all other Miami-Dade County coastal protection provisions. Please find attached a DERM Project Report which sets forth the reasons why the proposed project is recommended for approval by DERM pursuant to the applicable evaluation factors set forth in Section 24-48.3 of the Code. The conditions, limitations, and restrictions set forth in the Project Report attached hereto are incorporated herein by references hereto.

Attachments

Attachment A: Class I Permit Application
Attachment B: Owner/Agent Letter, Engineer Certification Letter and Project Sketches
Attachment C: Zoning Memorandum
Attachment D: Submerged Lands Authorizations
Attachment E: DERM Project Report

NOTICE OF PUBLIC HEARING ON AN APPLICATION BY THE FLORIDA POWER & LIGHT COMPANY FOR A CLASS I PERMIT TO INSTALL SURFACE WATER AND GROUNDWATER MONITORING WELLS AND ACCESS PLATFORMS WITHIN THE TIDAL WATERS OF MIAMI-DADE COUNTY, FLORIDA

BOARD OF COUNTY COMMISSIONERS
MIAMI-DADE COUNTY, FLORIDA

NOTICE IS HEREBY GIVEN pursuant to Article IV, Division 1 of Chapter 24 of the Code of Miami-Dade County that the Board of County Commissioners of Miami-Dade County will hold and conduct a Public Hearing on a request by the Florida Power & Light Company for a Class I permit to install surface water and groundwater monitoring wells and access platforms within the tidal waters of Miami-Dade County. Such public hearing will be held on the 2nd day of March 2010 at 9:30 AM in the County Commission Chambers on the 2nd Floor of the Stephen P. Clark Center at 111 NW 1st Street in Miami, Florida.

Plans and details concerning the work requested in the application may be reviewed by interested persons at the office of the Miami-Dade County Department of Environmental Resources Management, 4th Floor, 701 NW 1st Court, Miami, Florida, 33136-3912.

Oral statements will be heard and appropriate records made. For accuracy of records, all important facts and arguments should be prepared in writing in triplicate, with two copies being submitted to the Deputy Clerk of the County Commission at the hearing or mailed to her beforehand (Diane Collins, Deputy Clerk), 111 NW 1st Street, Stephen P. Clark Center, Suite 17-202, Miami, Florida 33128; and with one copy being submitted beforehand to the Miami-Dade County Department of Environmental Resources Management, 4th Floor, 701 NW 1st Court, Miami, Florida, 33136-3912.

A person who decides to appeal any decision made by any Board, Agency, or Commission with respect to any matter considered at its meeting or hearing, will need a record of proceedings. Such person may need to ensure that a verbatim record of the proceedings is made, including the testimony and evidence upon which the appeal is to be based.

BOARD OF COUNTY COMMISSIONERS
MIAMI-DADE COUNTY, FLORIDA

HARVEY RUVIN, CLERK

BY: _____
Diane Collins, Deputy Clerk

MEMORANDUM

(Revised)

TO: Honorable Chairman Dennis C. Moss and Members, Board of County Commissioners

DATE: March 2, 2010

FROM: R. A. Cuevas, Jr. County Attorney

SUBJECT: Agenda Item No. 5(D)

Please note any items checked.

_____ **"3-Day Rule" for committees applicable if raised**

_____ **6 weeks required between first reading and public hearing**

_____ **4 weeks notification to municipal officials required prior to public hearing**

_____ **Decreases revenues or increases expenditures without balancing budget**

_____ **Budget required**

_____ **Statement of fiscal impact required**

_____ **Ordinance creating a new board requires detailed County Manager's report for public hearing**

_____ **No committee review**

_____ **Applicable legislation requires more than a majority vote (i.e., 2/3's ____, 3/5's ____, unanimous _____) to approve**

_____ **Current information regarding funding source, index code and available balance, and available capacity (if debt is contemplated) required**

5

Approved _____ Mayor
Veto _____
Override _____

Agenda Item No. 5(D)
3-2-10

RESOLUTION NO. _____

RESOLUTION RELATING TO AN APPLICATION BY THE FLORIDA POWER & LIGHT COMPANY FOR A CLASS I PERMIT TO INSTALL SURFACE WATER AND GROUNDWATER MONITORING WELLS AND ACCESS PLATFORMS WITHIN THE TIDAL WATERS OF MIAMI-DADE COUNTY, FLORIDA

WHEREAS, this Board desires to accomplish the purposes outlined in the accompanying memorandum, a copy of which is incorporated herein by reference,

NOW, THEREFORE, BE IT RESOLVED BY THE BOARD OF COUNTY COMMISSIONERS OF MIAMI-DADE COUNTY, FLORIDA, that this Board having considered all the applicable factors contained within Section 24-48.3 of the Code of Miami-Dade County, hereby approves the application by the Florida Power & Light Company for a Class I permit to install surface water and groundwater monitoring wells and access platforms within the tidal waters of Miami-Dade County, subject to the conditions set forth in the memorandum from the Director of the Miami-Dade County Department of Environmental Resources Management, a copy of which is attached hereto and made a part hereof. The issuance of this approval does not relieve the applicant from obtaining all applicable Federal, State, and local permits.

The foregoing resolution was offered by Commissioner , who moved its adoption. The motion was seconded by Commissioner and upon being put to a vote, the vote was as follows:

Dennis C. Moss, Chairman
Jose "Pepe" Diaz, Vice-Chairman

Bruno A. Barreiro	Audrey M. Edmonson
Carlos A. Gimenez	Sally A. Heyman
Barbara J. Jordan	Joe A. Martinez
Dorrin D. Rolle	Natacha Seijas
Katy Sorenson	Rebeca Sosa
Sen. Javier D. Souto	

The Chairperson thereupon declared the resolution duly passed and adopted this 2nd day of March, 2010. This resolution shall become effective ten (10) days after the date of its adoption unless vetoed by the Mayor, and if vetoed, shall become effective only upon an override by this Board.

MIAMI-DADE COUNTY, FLORIDA
BY ITS BOARD OF COUNTY COMMISSIONERS

HARVEY RUVIN, CLERK

Approved by County Attorney as
to form and legal sufficiency.

By:_____
Deputy Clerk

Peter S. Tell

Attachment A

Class I Permit Application

RECEIVED
JAN 20 2010

MIAMI-DADE COUNTY

DERM
Environmental Resources Regulation Division

Class I Permit Application

FOR DEPARTMENTAL USE ONLY

Date Received:	Application Number:
	Application Fee:

Application must be filled out in its entirety. Please indicate N/A for non-applicable fields.

1. Applicant Information:
Name: Florida Power & Light Company
Address: 700 Universe Blvd.
Juno Beach, FL Zip Code: 33408
Phone #: 561-691-7065 Fax#: 561-691-7049
Email: stacy.foster@fpl.com
* This should be the applicant's information for contact purposes.

2. Applicant's Authorized Permit Agent:
Agent is allowed to process the application, furnish supplemental information relating to the application and bind the applicant to all requirements of the application.
Name: Ecology & Environment, Inc.
Address: 1665 Palm Beach Lakes Blvd., Suite 500
West Palm Beach, FL Zip Code: 33401
Phone #: 561-694-6552 Fax #: 561-694-6551
Email: jbolleter@ene.com

3. Location where proposed activity exists or will occur (latitude and longitude are only necessary for properties without address or folio #):
Folio #(s): See Exhibit A. Latitude: See Exhibit A. Longitude: See Exhibit A.
Street Address: See Exhibit A. Section: Exhibit A. Township: Exhibit A. Range: Exhibit A.
In City or Town: Unicorporated Miami-Dade County Near City or Town: Homestead, FL
Name of waterway at location of the activity: Biscayne Bay

4. Describe the proposed activity (check all that apply):

- ☐ Seawall
  - ☐ New/Replacement Seawall
  - ☐ Seawall Cap
  - ☐ Batter Piles
  - ☐ King Piles
  - ☐ Footer/Toe Wall
  - ☐ Riprap
- ☐ Dock(s)
  - ☐ Pier(s)
  - ☐ Viewing Platform
- ☐ Boatlift
  - ☐ Mooring Piles
  - ☐ Fender Piles
  - ☐ Davits
- ☐ Dredging
  - ☐ Maintenance
  - ☐ New
- ☐ Filling
- ☐ Mangrove Trimming
- ☐ Mangrove Removal

☒ Other: Class I Permit Application by the Florida Power & Light Company to Install Surface Water and Groundwater Monitoring Wells and Access Platforms within the Tidal Waters of Miami-Dade County.

Estimated project cost = $35,000.00

Are you seeking an after-the-fact approval (ATF)? ☐Yes ☒No If "Yes", describe the ATF work: _____

5. Proposed Use (check all that apply):

- ☐ Single Family
- ☐ Multi-Family
- ☐ Private
- ☐ Public
- ☐ Commercial
- ☐ Industrial
- ☒ Utility

6. If the proposed work relates to the mooring of vessels provide the following information (please also indicate if the applicant does not have a vessel):
Proposed Vessel Type (s): N/A
Vessel Make/Model (If known): N/A
Draft (s)(range in inches.): N/A Length (s)(range in feet.): N/A
Total Number of Slips: N/A

7. List all permits or certifications that have been applied for or obtained for the above referenced work:

Issuing Agency	Type of Approval	Identification Number	Application Date	Approval Date
FDEP/ACOE	Permits			

RECEIVED
JAN 20
DERM
Environmental Resources Regulation Division

8. Contractor Information (If known):

Name: To be determined License # (County/State):

Address: Zip Code:

Phone #: Fax #: E-mail:

9. **IMPORTANT NOTICE TO APPLICANTS**: The written consent of the property owner is required for all applications to be considered complete. Your application WILL NOT BE PROCESSED unless the Applicant **and** Owner Consent portion of the application is completed below. You have the obligation to apprise the Department of any changes to information provided in this application.

Application is hereby made for a Miami-Dade County Class I permit to authorize the activities described herein. I agree to or affirm the following:

- I possess the authority to authorize the proposed activities at the subject property, and
- I am familiar with the information, data and plans contained in this application, and
- To the best of my knowledge and belief, the information, data and plans submitted are true, complete and accurate, and
- I will provide any additional information, evidence or data necessary to provide reasonable assurance that the proposed project will comply with the applicable State and County water quality standards both during construction and after the project is completed, and
- I am authorizing the permit agent listed in Section 2 of this application to process the application, furnish supplemental information relating to this application and bind the applicant to all requirements of this application, and
- I agree to provide access and allow entry to the project site to inspectors and authorized representatives of Miami-Dade County for the purpose of making the preliminary analyses of the site and to monitor permitted activities and adherence to all permit conditions.

A. **IF APPLICANT IS AN INDIVIDUAL**

Signature of Applicant | Print Applicant's Name | Date

B. **IF APPLICANT IS OTHER THAN AN INDIVIDUAL OR NATURAL PERSON**
(Examples: Corporation, Partnership, Trust, LLC, LLP, etc.)

Florida Power & Light Company	Corporation	Florida
Print Name of Applicant (Enter the complete name as registered)	Type (Corp, LLC, LLP, etc.)	State of Registration/Incorporation

Under the penalty of perjury, I certify that I have the authority to sign this application on behalf of the Applicant, to bind the Applicant, and if so required to authorize the issuance of a bond on behalf of the Applicant. (If asked, you must provide proof of such authority to the Department). ***Please Note: If additional signatures are required, pursuant to your governing documents, operating agreements, or other applicable agreements or laws, you must attach additional signature pages. *

Signature of Authorized Representative	Print Authorized Representative's Name	Title	Date
	Randall R. LaBauve	Vice President, ENVIRONMENTAL SERVICES	12/18/09

C. **IF APPLICANT IS A JOINT VENTURE** Each party must sign below(If more than two members, list on attached page)

Print Name of Applicant (Enter the complete name as registered)	Type (Corp, LLC, LLP, etc.)	State of Registration/Incorporation
Print Name of Applicant (Enter the complete name as registered)	Type (Corp, LLC, LLP, etc.)	State of Registration/Incorporation

Under the penalty of perjury, I certify that I have the authority to sign this application on behalf of the Applicant, to bind the Applicant, and if so required to authorize the issuance of a bond on behalf of the Applicant. (If asked, you must provide proof of such authority to the Department). ***Please Note: If additional signatures are required, pursuant to your governing documents, operating agreements, or other applicable agreements or laws, you must attach additional signature pages. *

Signature of Authorized Representative	Print Authorized Representative's Name	Title	Date
Signature of Authorized Representative	Print Authorized Representative's Name	Title	Date

10. WRITTEN CONSENT OF THE PROPERTY OWNER OF THE AREA OF THE PROPOSED WORK

I/We are the fee simple owner(s) of the real property located at Exhibit A. Miami-Dade County, Florida, otherwise identified in the public records of Miami-Dade County as Folio No. _____. I am aware and familiar with the contents of this application for a Miami-Dade County Class I Permit to perform the work on or adjacent to the subject property, as described in Section 4 of this application. I possess the riparian rights to the area of the proposed work (if applicable) and hereby consent to the work identified in this Class I Permit application.

A. IF THE OWNER(S) IS AN INDIVIDUAL

Signature of Owner	Print Owner's Name	Date
Signature of Owner	Print Owner's Name	Date

B. IF THE OWNER IS OTHER THAN AN INDIVIDUAL OR NATURAL PERSON
(Examples: Corporation, Partnership, Joint Venture, Trust, LLC, LLP, etc.)

Florida Power & Light Company	Corporation	Florida
Print Name of Owner (Enter the complete name as registered)	Type (Corp, LLC, LLP, etc.)	State of Registration/Incorporation

700 Universe Blvd. Juno Beach, FL. 33408
Address of Owner

Under the penalty of perjury, I certify that I have the authority to sign this application on behalf of the Owner, to bind the Owner, and if so required to authorize the issuance of a bond on behalf of the Owner. (If asked, you must provide proof of such authority to the Department). ***Please Note: If additional signatures are required, pursuant to your governing documents, operating agreements, or other applicable agreements or laws, you must attach additional signature pages. ***

Signature of Authorized Representative	Print Authorized Representative's Name	Title	Date
	Randall R. LaBauve	Vice President, ENVIRONMENTAL SERVICES	12/18/09
Signature of Authorized Representative	Print Authorized Representative's Name	Title	Date

Please Review Above

Appropriate signature(s) must be included in:

Box 9: either A, B or C

AND

Box 10: either A or B

RECEIVED
JAN 20 2010

DERM
Environmental Resources Regulation Division

Exhibit A

RECEIVED
JAN 20 2015
DERM
Environmental Resources Regulation Divisi

Table 1
Proposed Monitoring Stations under DERM Class I Permit Jurisdiction

Station	Latitude	Longitude	Section	Township	Range
TPGW-10	25.440781°	-80.324611°	n/a	n/a	n/a
TPGW-11	25.397250°	-80.30682°	n/a	n/a	n/a
TPGW-14	25.354300°	-80.326120°	n/a	n/a	n/a
BBSW-1	25.440439°	-80.321652°	n/a	n/a	n/a
BBSW-2	25.401737°	-80.323351°	n/a	n/a	n/a
BBSW-3	25.379770°	-80.304761°	n/a	n/a	n/a
BBSW-4	25.344537°	-80.328856°	n/a	n/a	n/a
BBSW-5	25.320470°	-80.367135°	n/a	n/a	n/a
TPSWC-4	25.356681°	-80.367576°	29	58	40
TPSWC-5	25.354762°	-80.338246°	28	58	40

Attachment B

Owner/Agent Letter, Engineer Certification Letter, and Project Sketches

FPL

January 19, 2010

Miami Dade County DERM
Class I Permitting Program
701 NW 1st Court
Miami, FL 33136

Re: Class I Standard Form Permit Application 2009-CLI-PER-00387, Class I Permit Application by the Florida Power & Light Company to Install Surface Water and Groundwater Monitoring Wells and Access Platforms within the Tidal Waters of Miami-Dade County.

By the attached Class I Standard Form permit application with supporting documents, I Randall R. LaBauve, am the permit applicant/applicant's authorized agent and hereby request permission to perform the following: Class I Permit Application by the Florida Power and Light Company to Install Surface Water and Groundwater Monitoring Wells and Access Platforms within the Tidal Waters of Miami-Dade County. I understand that a Miami-Dade County Class I Standard Form Permit is required to perform this work.

If approval is granted for the proposed work by the Board of County Commissioners, complete and detailed plans and calculations of the proposed work shall be prepared by an engineer registered/licensed in the State of Florida in accordance with the minimum requirements of Chapter 24 of the Code of Miami-Dade County, Florida. Said plans and calculations shall be subject to the review and approval of the Department of Environmental Resources Management. The permit applicant will secure the services of an engineer registered/licensed in the State of Florida to conduct inspections throughout the construction period, and said engineer shall prepare all required drawings of record. In the event that the proposed work which is the subject of this Class I Permit application involves the cutting or trimming of a mangrove tree(s), a detailed plan of the proposed cutting or trimming shall be prepared by a licensed landscape architect and submitted to the Department for review and approval, and the permit applicant will secure services of a licensed landscape architect to supervise the trimming or cutting.

Respectfully submitted,

Randall R. LaBauve
Vice President, Environmental Services

ecology and environment, inc.
International Specialists in the Environment
1665 Palm Beach Lakes Blvd., Suite 500, West Palm Beach, Florida 33401
Tel: (561) 640-6552, Fax: (561) 640-6551

CLASS I PERMIT APPLICATION

ENGINEER LETTER OF CERTIFICATION

January 15, 2010

Miami-Dade County DERM
Class I Permitting Program
701 NW 1st Court, Suite 600
Miami, Florida 33136

RE: Class I Permit Application Number 2009-CLI-PER-00387, Class I Permit Application by the Florida Power & Light Company to Install Surface Water and Groundwater Monitoring Wells and Access Platforms within the Tidal Waters of Miami-Dade County

Ladies and Gentlemen:

This letter will certify that I am an engineer registered/licensed in the State of Florida, qualified by education and experience in the area of construction, and that to the best of my knowledge and belief, the proposed work does not violate any laws of the State of Florida or any provision of the Code of Miami-Dade County which may be applicable, that diligence and recognized standard practices of the engineering profession have been exercised in the engineer's design process for the proposed work, and in my opinion based upon my knowledge and belief, the following will not occur:

a. Harmful obstruction or undesirable alteration of the natural flow of the water within the area of the proposed work.

b. Harmful or increased erosion, shoaling of channels or stagnant areas of water. (Not applicable to class IV permits).

c. Material injury to adjacent property.

d. Adverse environmental impacts from changes in water quality or quantity. (Applicable to class IV permits only).

Further, I have been retained by the applicant to provide inspections throughout the construction period and to prepare a set of reproducible record prints of drawings showing changes made during the construction process based upon the marked-up prints, drawings, and other data furnished by the contractor to me.

Sincerely,

Jim Bolleter, P.E.
P.E. #40051

RECEIVED
JAN 20 2010
DERM
Environmental Resources Regulation Division

recycled paper

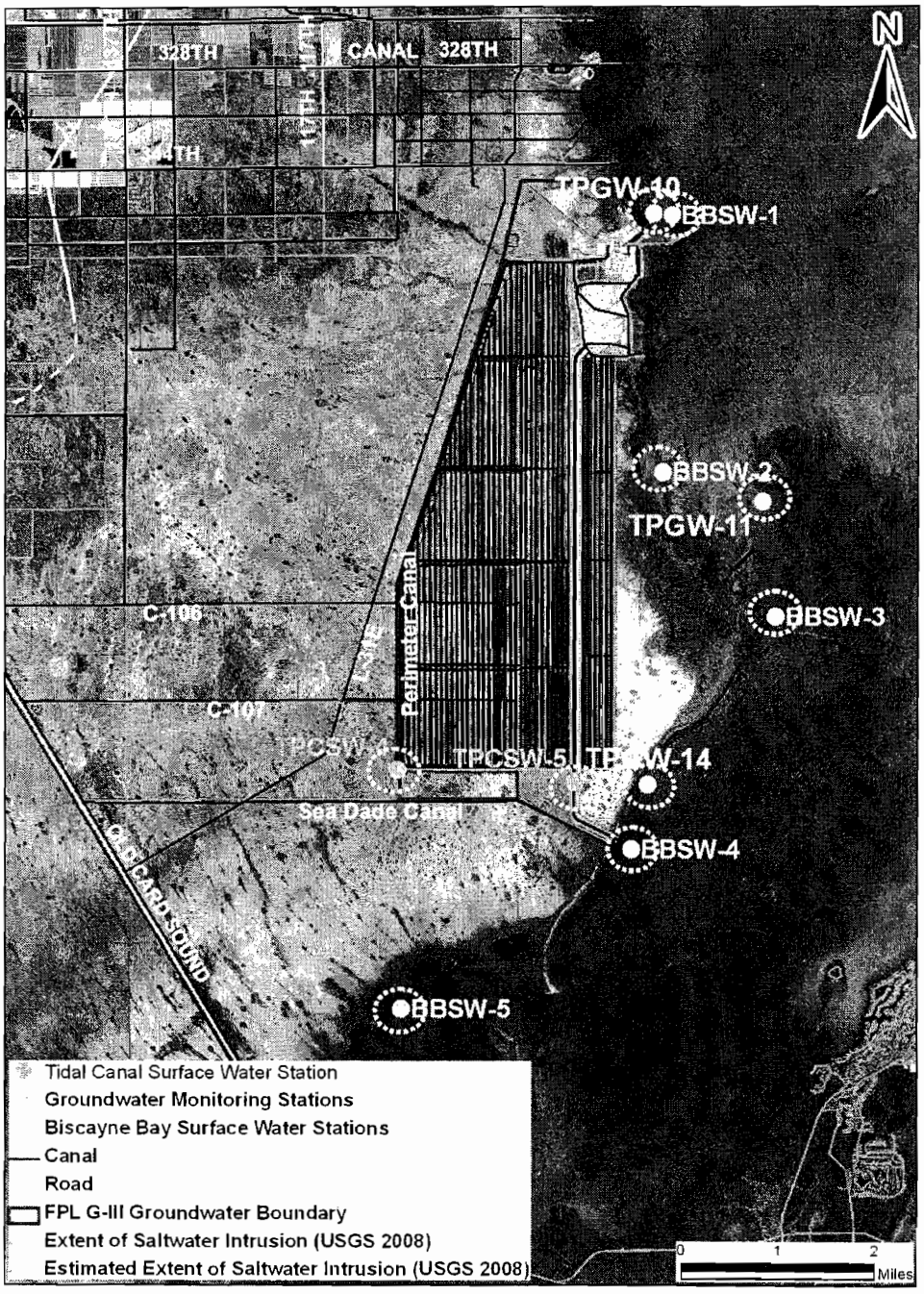

Figure 2. Proposed Groundwater Monitoring Stations, Biscayne Bay Surface Water Stations, and Tidal Canal Surface Water Stations

RECEIVED
DEC 23 2009
DERM
ENVIRONMENTAL RESOURCES
REGULATION DIVISION

...CUMENT HAS BEEN DIGITALLY
...MODIFIED, PLEASE SUBMIT
...NING.

17

Table 1
Proposed Monitoring Stations under DERM Class I Permit Jurisdiction

Station	Latitude	Longitude	Section	Township	Range
TPGW-10	25.440781°	-80.324611°	n/a	n/a	n/a
TPGW-11	25.397250°	-80.30682°	n/a	n/a	n/a
TPGW-14	25.354300°	-80.326120°	n/a	n/a	n/a
BBSW-1	25.440439°	-80.321652°	n/a	n/a	n/a
BBSW-2	25.401737°	-80.323351°	n/a	n/a	n/a
BBSW-3	25.379770°	-80.304761°	n/a	n/a	n/a
BBSW-4	25.344537°	-80.328856°	n/a	n/a	n/a
BBSW-5	25.320470°	-80.367135°	n/a	n/a	n/a
TPSWC-4	25.356681°	-80.367576°	29	58	40
TPSWC-5	25.354762°	-80.338246°	28	58	40

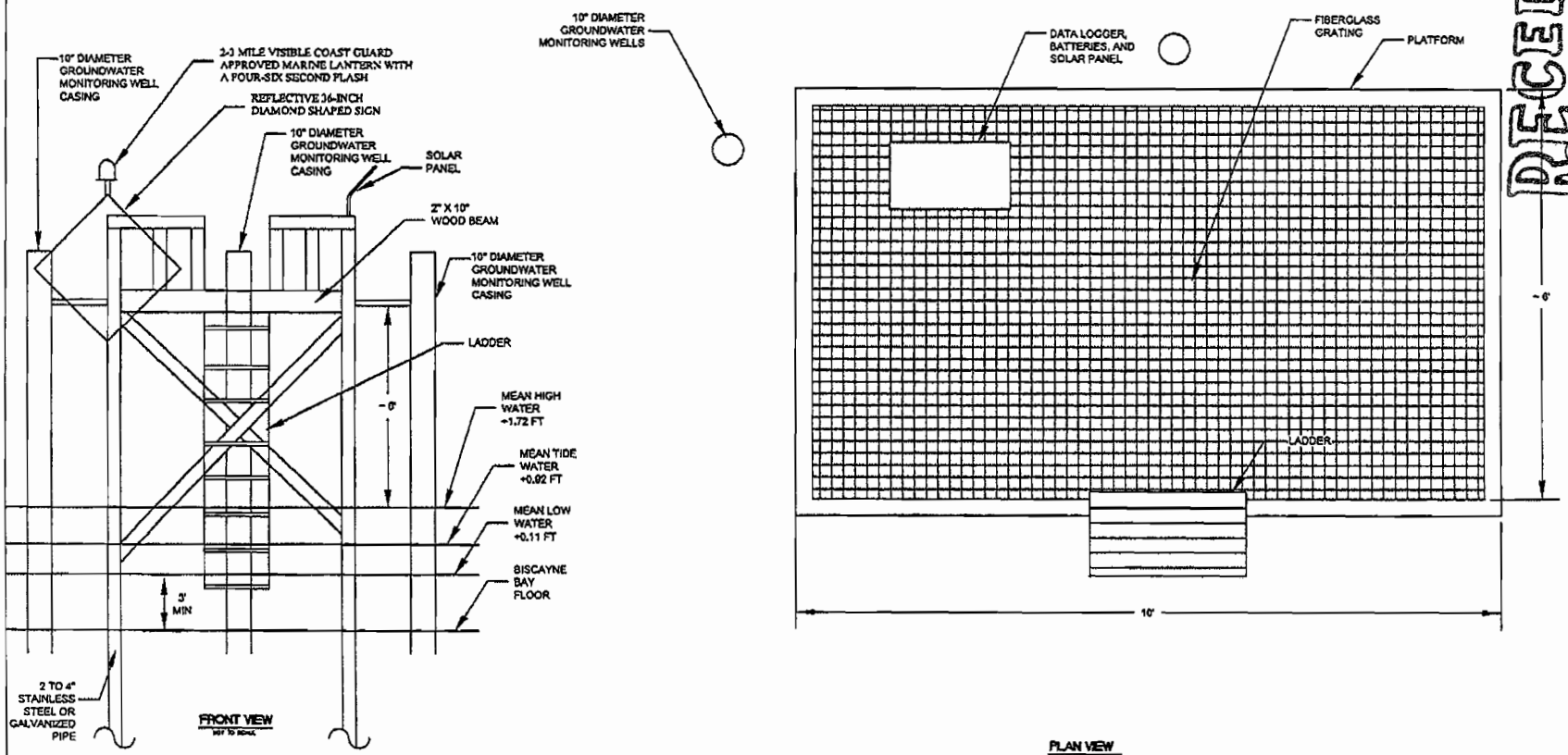

NOTES:

1. DRAWING FOR ENVIRONMENTAL PERMITTING PURPOSES ONLY.
2. PLATFORM WILL BE MADE OF FIBERGLASS GRATE.
3. PLATFORM TO BE APPROXIMATELY 6' ABOVE MEAN SEA LEVEL.

NO.	DATE	DSN	APP'D	DESCRIPTION

REVISIONS

ecology and environment, inc.

D. CRAWLEY	J. BOLLETER
P. OWEN	J. BOLLETER

FPL TURKEY POINT WATER QUALITY MONITORING
DADE COUNTY, FLORIDA

BISCAYNE BAY GROUNDWATER MONITORING STATION TYPICAL

SCALE	DATE ISSUED	C.A.D. FILE NO.	DRAWING NO.	REV.
NTS	12/16/09	FPL-2952FC09-2.dwg	Sheet — 1 of 3	A

RECEIVED
JAN 20 2010
DERM
Environmental Resources Regulation Division

19

RECEIVED
JAN 20 2010
DERM
Environmental Resources Regulation Division

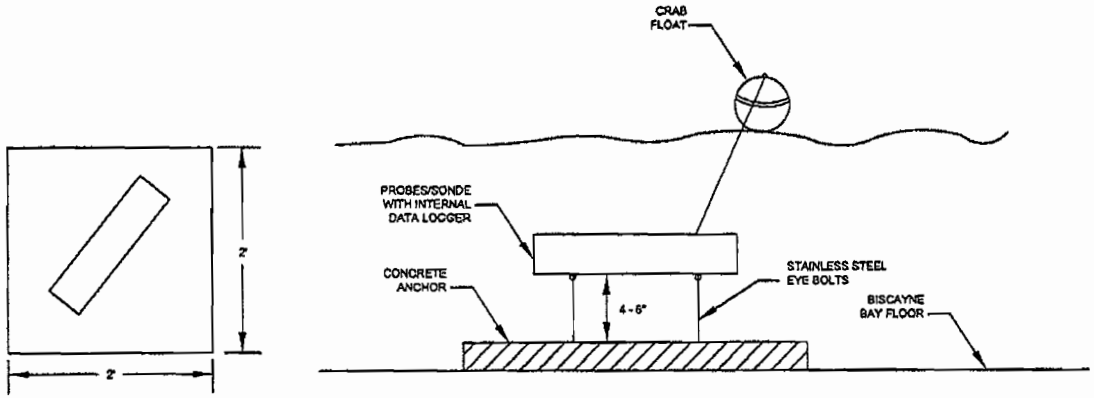

BISCAYNE BAY SURFACE WATER MONITORING STATION
NOT TO SCALE

NOTES:

1. DRAWING FOR ENVIRONMENTAL PERMITTING PURPOSES ONLY.
2. TO BE DEPLOYED IN AREAS WITH SANDY BOTTOMS ABSENT OF SEA GRASSES AND CORALS.

NO.	DATE	BY	APP'D	DESCRIPTION

ecology and environment, inc.

D. CRAWLEY	J. BOLLETER
P. CHOI	J. BOLLETER

FPL TURKEY POINT WATER QUALITY MONITORING
DADE COUNTY, FLORIDA

BISCAYNE BAY SURFACE WATER MONITORING STATION TYPICAL

SCALE	DATE ISSUED	CAD FILE NO.	SHEET NO.	REV.
NTS	12/16/09	FPL-2002FC09-2.dwg	Sheet - 2 of 3	A

20

RECEIVED
JAN 20 2010
DERM
Environmental Resources Regulation Division

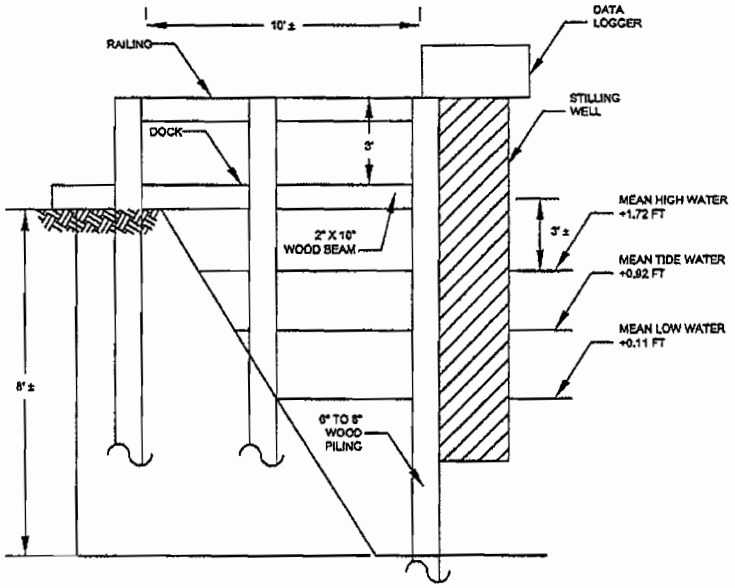

CROSS SECTION: TIDALLY INFLUENCED CANAL SURFACE WATER MONITORING STATIONS
NOT TO SCALE

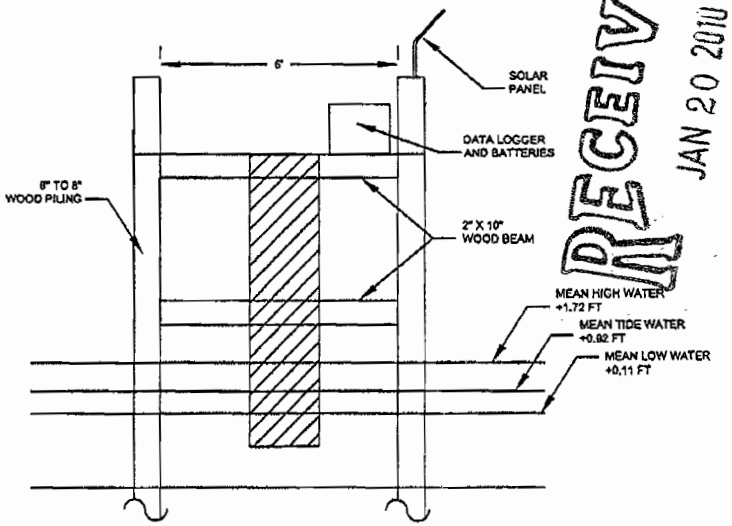

FRONT VIEW
NOT TO SCALE

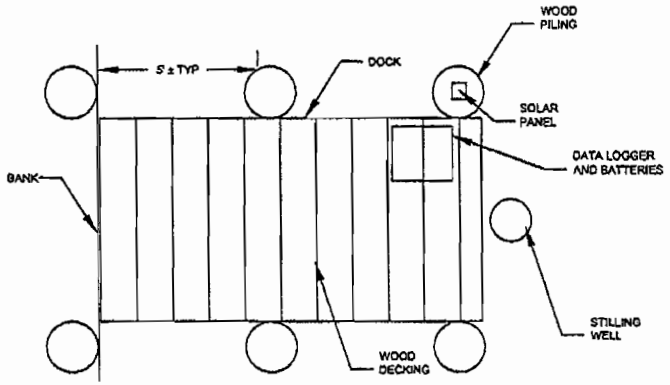

PLAN VIEW
NOT TO SCALE

NOTES:

1. DRAWING FOR ENVIRONMENTAL PERMITTING PURPOSES ONLY.
2. DOCK TO BE ~3' IN WIDTH.
3. LENGTH OF DOCK WILL DEPEND ON SLOPE OF BANK AND DEPTH OF WATER.

ecology and environment, inc.

D. CRAWLEY	J. BOLLETER
P. OWEN	J. BOLLETER

FPL TURKEY POINT WATER QUALITY MONITORING
DADE COUNTY, FLORIDA

TIDALLY INFLUENCED CANAL SURFACE WATER MONITORING STATION TYPICAL

SCALE	DATE ISSUED	C.A.D. FILE NO.	DRAWING NO.	REV.
NTS	12/16/09	FPL-2052F009-2.dwg	Sheet - 3 of 3	A

21

Attachment C

Zoning Memorandum

Memorandum

MIAMI-DADE COUNTY

Date: January 27, 2010

To: Lisa Spadafina, Manager
Coastal Resources Section
Environmental Resources Management

From: Lourdes Barrelli, Biologist II
Coastal Resources Section
Environmental Resources Management

Subject: Class I Permit Application by the Florida Power & Light Company to Install Surface Water and Groundwater Monitoring Wells and Access Platforms within the Tidal Waters of Miami-Dade County

---

Pursuant to Section 24-48.2(II)(A)(7), of the Code of Miami-Dade County, Florida, a substantiating letter shall be submitted by the applicant stating that the proposed project does not violate any zoning laws. Said letter will be submitted after approval by the Miami-Dade County Board of County Commissioners and prior to issuance of the Class I permit.

Attachment D

Submerged Lands Authorization

SCIENTIFIC RESEARCH AND COLLECTING PERMIT

Grants permission in accordance with the attached general and special conditions

United States Department of the Interior
National Park Service

Biscayne NP

Study#: BISC-10003
Permit#: BISC-2010-SCI-0005
Start Date: Jan 29, 2010
Expiration Date: Jan 31, 2010
Coop Agreement#: n/a
Optional Park Code: n/a

Name of principal investigator:

Name: Stacy Foster **Phone:** 561-691-7065 **Email:** stacy.foster@fpl.com

Name of institution represented:

florida power and light

Co-Investigators:

Name: Jennifer Vega	**Phone:** 561-640-6552	**Email:** jvega@ene.com
Name: Jim Bolleter	**Phone:** 561-640-6552	**Email:** jbolleter@ene.com
Name: John Jones	**Phone:** 561-691-7056	**Email:** jjones@fpl.com
Name: Kristin Vaughan	**Phone:** 561-640-6552	**Email:** kvaughan@ene.com
Name: Mei L. (Sharon) Ewe	**Phone:** 561-640-6552	**Email:** sewe@ene.com
Name: Robert Bertelson	**Phone:** n/a	**Email:** bob.bertelson@fpl.com

Project title:

Surface and Groundwater Monitoring of southern Biscayne Bay

Purpose of study:

The purpose of this study is to monitor the water quality of the nearshore areas of Biscayne National Park (BNP), to the east of the Turkey Point Plant (TPP) Cooling Canal System (CCS). As part of the proposed Uprate of Units 3 and 4, TPP is required to monitor for the potential impact of this Uprate on the surrounding water quality within BNP.

As part of the Monitoring Plan (â Planâ), FPL is seeking to develop an understanding of the hydrologic dynamics around TPP. FPL will be measuring surface and groundwater quality within BNP using two methods: an automated system (reporting specific conductance, temperature and water level in groundwater wells, and conductance and temperature in surface water stations) and manual quarterly water quality monitoring (measuring 48 field and laboratory paramters). Two groundwater stations will be constructed and three surface water monitoring stations established within BNP for this effort.

This work will contribute to increased understanding of the seasonal, spatial, and temporal changes in subsurface and surface water quality within Biscayne National Park.

Subject/Discipline:

Geomorphology / Surface Processes

Locations authorized:

The stations will all be located in the subtidal areas (approximately 3â -20â deep) of BNP (Table 1, Attachment 1-1). The exact locations of the stations (Attachments 1-3 to 1-7) may vary by a few meters as stations will be installed in areas where there are no seagrass or soft corals present to minimize ecological impacts.

Table 1. Proposed ground and surface water monitoring locations. Approximate latitude and longitudes (in decimal degrees) are shown.

25

Location Station number Latitude Longitude

Groundwater wells

TPGW-10 25.44078Â° -80.32461Â°

TPGW-11 25.39725Â° -80.30682Â°

TPGW-12 25.44867Â° -80.33981Â°

Biscayne Bay

BBSW-1 25.440439Â° -80.321652Â°

BBSW-2 25.401737Â° -80.323351Â°

BBSW-3 25.379770Â° -80.304761Â°

Transportation method to research site(s):

Access to locations will either be via boat or vehicle. Boats will be shallow-draft (<18inches) appropriate for accessing shallow near-shore sites, such that there is no damage to any SAV or hard-bottom community. Travel to the sites is required for up to eight sampling and sonde cleaning/calibration events per year. Each sampling event will be between one to three days, depending on weather and access conditions. No restricted or backcountry areas will be accessed.

Collection of the following specimens or materials, quantities, and any limitations on collecting:

Water, sediment, and electronic information from six locations in and around Turkey point. Construction of three well clusters, with each cluster having one well to a depth of 30 ft, another to 60 ft, and the third to 110 ft.

Name of repository for specimens or sample materials if applicable:

Repository type: Will be destroyed through analysis or discarded after analysis
Objects collected:
No organisms will be collected. Only water samples will be collected in this effort; all samples will be consumed during analysis.

Specific conditions or restrictions (also see attached conditions):

1. This permit is only valid within the boundaries of Biscayne National Park

2. The permittee will advise the Park Research Permit and Reporting System (RPRS) Program Manger (786-335-3633) when they will be working in the park at least three days prior to conducting field work

3. The permittee will inform the RPRS Program Manager of any unusual conditions or observations as soon as reasonable.

4. All NPS support (logistical or physical), if needed, will be coordinated through the RPRS Manager unless advised otherwise.

5. Copies of all data, publications, reports, field notes, and photographs collected during this project will be submitted to the South Florida Museum Collection Center (SKMCC), through the RPRS Coordinator for inclusion in accession BISC-249. This will be done according to the direction forwarded to the project investigator by the SFMCC when the accession was opened

6. Florida Power and Light will submit to the Park (Superintendent) copies (including proposed construction drawings where necessary) of all U.S. Coast Guard, other Federal, State and County permits required for the placement and construction of the three well clusters and their associated access towers prior to initiating construction.

7. During the construction and sampling of the wells all drilling fluid, cuttings, development water and purge water will be retained on the drilling barge to allow solids to settle to the bottom of the storage containers.

8. Supernatant having a transmissivity of 5 NTU (Nephelometric Turbidity Units), or less, can be released into the Bay. Oils, greases and other biologically active pollutants must be retained and removed prior to release.

9. The collected cores will be classified according to the standard published by Dunham (Dunham, R.J., 1962, Classification of carbonate rocks according to depositional texture. In: Ham, W.E. (ed.), Classification of Carbonate rocks: American Association of Petroleum Geologists Memoir, 108-121). The cores from each well be logged, properly labeled, and stored in fiberboard core boxes (Miners Inc) and submitted to the SFMCC for final storage under accession BISC-249.

10. The NPS retains the authority to access the wells at any time for inspection and sampling. The wells will be locked in such a way to provide that level of access without the NPS having to inform FPL when NPS activities are planned at the site and vice versa.

11. NPS is not responsible for the loss or damage of field equipment or the structure. In addition, if some, or all, sampling equipment needs to be removed to allow sampling be it the NPS, or one of its partners, FPL shall comply with an NPS request--to prepare the well for sampling--within four (4) day after receiving the request

12. Where applicable, the well support structures will be lighted and have noise producing devices according to U.S. Coast Guard Standards for navigable water.

13. Florida Power and Light Company retains the responsibility for maintaining safe structures and will retain liability for any and all injuries to FPL personnel, visitors (vandals), and NPS staff on the platform.

14. At the end of the project FPL shall properly abandon wells according to the State of Florida Standard for well abandonment including the removal of the well casings. If the NPS chooses to assume the continued use of the wells, FPL will establish an escrow account in the Parks name, with sufficient funds to abandon the wells to according to the State standard for well abandonment.

15. The three automated data loggers surficial water stations will be constructed according to submitted plans and will be marked with lighted buoys according to Coast Guard specifications

16. The three automated surficial water stations will be removed, including the anchor pin if one is used, in their entirety at the end of the project.

17. The NPS reserves the right to review all reports and publications prior to their general or internal release.

Recommended by park staff(name and title):

Reviewed by Collections Manager:

Yes X No ___

Approved by park official:

Mark Lewis

Date Approved:

Jan 29 2010

Title:

Superintendent

I Agree To All Conditions And Restrictions Of this Permit As Specified
(Not valid unless signed and dated by the principal investigator)

Mary M. Foote

(Principal investigator's signature)

2/1/10

(Date)

THIS PERMIT AND ATTACHED CONDITIONS AND RESTRICTIONS MUST BE CARRIED AT ALL TIMES WHILE CONDUCTING RESEARCH ACTIVITIES IN THE DESIGNATED PARK(S)

Florida Department of Environmental Protection

Southeast District Office
400 N. Congress Avenue, Suite 200
West Palm Beach, FL 33401
(561) 681-6600

Charlie Crist
Governor

Jeff Kottkamp
Lt. Governor

Michael W. Sole
Secretary

Jack Long, Director
Southeast District Office

FEB 11 2010

Florida Power & Light
Stacy Foster, Environmental Specialist
700 Universe Blvd. JES/JB
Juno Beach, FL. 33408

Dear Ms. Foster:

Enclosed is Environmental Resource Permit No. 13-0127512-004 issued pursuant to Part IV of Chapter 373, Florida Statutes (F.S.), and Title 62, Florida Administrative Code (F.A.C.).

Appeal rights for you as the permittee and for any affected third party are described in the text of the permit along with conditions which must be met when permitted activities are undertaken. Please review this document carefully to ensure compliance with both the general and specific conditions contained herein. As the permittee, you are responsible for compliance with these conditions. **Please ensure all construction personnel associated with your activity review and understand the attached drawings and conditions.** Failure to comply with this permit may result in liability for damages and restoration, and the imposition of civil penalties up to $10,000.00 per violation per day pursuant to Sections 403.141 and 403.161, F.S.

In addition, please ensure the construction commencement notice and all other reporting conditions are forwarded to the appropriate office as indicated in the specific conditions.

If you have any questions about this document, please contact me at 561/681-6641 or by email at Irene.Arpayoglou@dep.state.fl.us.

Sincerely,

for Irene Arpayoglou
Environmental Specialist II
Submerged Lands & Environmental
Resources Program

ENVIRONMENTAL RESOURCE PERMIT

PERMITTEE:
Stacy Foster
Environmental Specialist
Florida Power & Light
700 Universe Blvd. JES/JB
Juno Beach, FL. 33408

Permit No.: 13-0127512-004
Date of Issue: FEB 1 1 2010
Expiration Date of
Construction Phase: FEB 10 2015
County: Miami-Dade
Project: FPL Turkey Point, Groundwater and Surface Water Monitoring Wells

---

This project requires an Environmental Resource Permit. Under the operating agreements between the Department and the water management districts, the Department has the authority to issue this permit. References: Part IV of Chapter 373, Florida Statutes; Title 62, Florida Administrative Code; Operating Agreements with the water management districts in Chapter 62-113, Florida Administrative Code.

ACTIVITY DESCRIPTION:

The purpose of the project is to construct groundwater monitoring stations and surface water monitoring stations (sixteen total) in tidal and non-tidal canals and in wetland areas throughout the vicinity of the Turkey Point Power Plant and in Biscayne Bay. In order to access the monitoring stations over wetlands, a 6' x 220' (1,320-sq. ft.) boardwalk shall be constructed at TPGW-1 and a 6' x 60' boardwalk shall be constructed at TPGW-5 and at TPGW-7 (720-sq. ft.).

In order to offset approximately 0.09844 acres of wetlands impacts (including sawgrass marsh, wetland scrub, and mangroves) associated with the monitoring locations and temporary impacts due to construction in wetland areas, the applicant has purchased 0.12 Freshwater Herbaceous credits from the Everglades Mitigation Bank.

Best management practices shall be employed during all phases of this project. All wetland areas and water bodies outside the specific limits of construction authorized by this permit shall be protected from erosion, siltation, scouring and/or dewatering. Erosion barriers shall be installed prior to any excavation or placement of fill material and shall be maintained in effective condition at all locations until construction is completed and disturbed areas are stabilized.

ACTIVITY LOCATION:

The project is located in the vicinity of the Turkey Point Power Plant in Homestead, FL., (Sections 5, 19, 27, 28, 29, 35 Townships 57, 58 South, Ranges 39, 40 East), in Miami-Dade County at the locations identified in the Table 1 below. Some sites are located within Biscayne Bay Aquatic Preserve, Class III Waters, Outstanding Florida Waters, as well as the Biscayne National Park.

Table 1
Proposed Monitoring Stations under FDEP and USACE Jurisdiction

Station	Latitude	Longitude	Section	Township	Range
TPGW-1	25.434069°	-80.354647°	29	57	40
TPGW-5	25.423322°	-80.403696°	35	57	39
TPGW-7	25.434089°	-80.427809°	27	57	39
TPGW-10	25.440781°	-80.324611°	n/a	n/a	n/a
TPGW-11	25.397250°	-80.306820°	n/a	n/a	n/a
TPGW-14	25.354300°	-80.326120°	n/a	n/a	n/a
BBSW-1	25.440439°	-80.321652°	n/a	n/a	n/a

BBSW-2	25.401737°	-80.323351°	n/a	n/a	n/a
BBSW-3	25.379770°	-80.304761°	n/a	n/a	n/a
BBSW-4	25.344537°	-80.328856°	n/a	n/a	n/a
BBSW-5	25.320470°	-80.367135°	n/a	n/a	n/a
TPSWC-1	25.433809°	-80.353144°	29	57	40
TPSWC-2	25.405514°	-80.363117°	5	58	40
TPSWC-3	25.369635°	-80.375963°	19	58	40
TPSWC-4	25.354535°	-80.363068°	29	58	40
TPSWC-5	25.354762°	-80.338246°	28	58	40

This permit also constitutes a finding of consistency with Florida's Coastal Zone Management Program, as required by Section 307 of the Coastal Management Act.

This permit also constitutes certification of compliance with water quality standards under Section 401 of the Clean Water Act, 33 U.S.C. 1341.

This activity also requires a proprietary authorization, as the activity is located on sovereignty submerged lands owned by the Board of Trustees of the Internal Improvement Trust Fund, pursuant to Article X, Section 11 of the Florida Constitution, and Sections 253.002 and 253.77, F.S. The activity is not exempt from the need to obtain a proprietary authorization. The Department has the responsibility to review and take final action on this request for proprietary authorization in accordance with Section 18-21.0051, and the Operating Agreements executed between the Department and the water management districts, as referenced in Chapter 62-113, F.A.C. In addition to the above, this proprietary authorization has been reviewed in accordance with Chapter 253 and Chapter 258, F.S., Chapter 18-18, Chapter 18-21, and Section 62-343.075, F.A.C.

As staff to the Board of Trustees, the Department has reviewed the activity described above, and has determined that the activity qualifies for a letter of consent to use sovereignty, submerged lands, as long as the work performed is located within the boundaries as described herein and is consistent with the terms and conditions herein. Therefore, consent is hereby granted, pursuant to Chapter 253.77, F.S., to perform the activity on the specified sovereignty submerged lands.

The monitoring wells in the Biscayne National Park will not occur on sovereign submerged land. Therefore, pursuant to Chapter 253.77, F.S., authorization from the Board of Trustees is not required.

Federal authorization for the proposed project is reviewed by DEP pursuant to an agreement between the Department and the U.S. Army Corps of Engineers (Corps). The agreement is outlined in a document titled *Coordination Agreement Between the U.S. Army Corps of Engineers and the Florida Department of Environmental Protection State Programmatic General Permit, Section 10 of the Rivers and Harbor Act of 1899 and Section 404 of the Clean Water Act.*

Your project has been reviewed for compliance with a State Programmatic General Permit (SPGP). As shown on the attached drawings, the proposed project is **not** consistent with the SPGP program. A copy of your application has been sent to the Corps who may require a separate permit. Failure to obtain their authorization prior to construction could subject you to enforcement action. For further information, contact the Corps directly.

You are hereby advised that authorizations also may be required by other federal, state, and local entities. This authorization does not relieve you from the requirements to obtain all other required permits and authorizations.

The above named permittee is hereby authorized to construct the work shown on the application and attached drawing(s), plans, and other documents attached hereto and made a part hereof. **This permit is subject to the limits, conditions, and locations of work shown in the attached drawings, and is also subject to the**

attached 19 General Conditions, 9 General Consent Conditions, and 9 Specific Conditions, which are a binding part of this permit. You are advised to read and understand these drawings and conditions prior to commencing the authorized activities, and to ensure the work is conducted in conformance with all the terms, conditions, and drawings. If you are utilizing a contractor, the contractor also should read and understand these drawings and conditions prior to commencing the authorized activities. Failure to comply with all drawings and conditions shall constitute grounds for revocation of the permit and appropriate enforcement action.

Operation of the facility is not authorized except when determined to be in conformance with all applicable rules and with the general and specific conditions of this permit/certification/authorization, as specifically described below.

GENERAL CONDITIONS:

(1) All activities authorized by this permit shall be implemented as set forth in the plans, specifications and performance criteria as approved by this permit. Any deviation from the permitted activity and the conditions for undertaking that activity shall constitute a violation of this permit and Part IV, Chapter 373, F.S.

(2) This permit or a copy thereof, complete with all conditions, attachments, exhibits, and modifications shall be kept at the work site of the permitted activity. The complete permit shall be available for review at the work site upon request by the Department staff. The permittee shall require the contractor to review the complete permit prior to commencement of the activity authorized by this permit.

(3) Activities approved by this permit shall be conducted in a manner which does not cause violations of state water quality standards. The permittee shall implement best management practices for erosion and pollution control to prevent violation of state water quality standards. Temporary erosion control shall be implemented prior to and during construction, and permanent control measures shall be completed within 7 days of any construction activity. Turbidity barriers shall be installed and maintained at all locations where the possibility of transferring suspended solids into the receiving waterbody exists due to the permitted work. Turbidity barriers shall remain in place at all locations until construction is completed and soils are stabilized and vegetation has been established. All practices shall be in accordance with the guidelines and specifications described in Chapter 6 of the Florida Land Development Manual; A Guide to Sound Land and Water Management (Department of Environmental Regulation, 1988), unless a project-specific erosion and sediment control plan is approved as part of the permit. Thereafter the permittee shall be responsible for the removal of the barriers. The permittee shall correct any erosion or shoaling that causes adverse impacts to the water resources.

(4) The permittee shall notify the Department of the anticipated construction start date within 30 days of the date that this permit is issued. **At least 48 hours prior to commencement** of activity authorized by this permit, the permittee shall submit to the Department an "Environmental Resource Permit Construction Commencement" notice (Form No. 62-343.900(3), F.A.C.) indicating the actual start date and the expected completion date.

(5) When the duration of construction will exceed one year, the permittee shall submit construction status reports to the Department on an annual basis utilizing an "Annual Status Report Form" (Form No. 62-343.900(4), F.A.C.). Status Report Forms shall be submitted the following June of each year.

(6) **Within 30 days after completion of construction** of the permitted activity, the permittee shall submit a written statement of completion and certification by a registered professional engineer or other appropriate individual as authorized by law, utilizing the supplied "Environmental Resource Permit As-Built Certification by a Registered Professional" (Form No. 62-343.900(5), F.A.C.). The statement of completion and certification shall be based on on-site observation of construction or review of as-built drawings for the purpose of determining if the work was completed in compliance with permitted plans and specifications. This submittal shall serve to notify the Department that the system is ready for inspection. Additionally, if deviation from the approved drawings are discovered during the certification process, the certification must be accompanied by a copy of the approved permit drawings with deviations noted. Both the original and revised specifications must be clearly shown. The plans must be clearly labeled as "as-built" or "record" drawing. All surveyed dimensions and elevations shall be certified by a registered surveyor.

(7) The operation phase of this permit shall not become effective: until the permittee has complied with the requirements of condition (6) above, has **submitted a "Request for Transfer of Environmental Resource Permit Construction Phase to Operation Phase" (Form No. 62-343.900(7), F.A.C.)**; the Department determines the system to be in compliance with the permitted plans and specifications; and the entity approved by the Department in accordance with Sections 9.0 and 10.0 of the Basis of Review for Environmental Resource Permit Applications Within the South Florida Water Management District - August 1995, accepts responsibility for operation and maintenance of the system. The permit shall not be transferred to such approved operation and maintenance entity until the operation phase of the permit becomes effective. Following inspection and approval of the permitted system by the Department, the permittee shall initiate transfer of the permit to the approved responsible operating entity if different from the permittee. Until the permit is transferred pursuant to Section 62-343.110(1)(d), F.A.C., the permittee shall be liable for compliance with the terms of the permit.

(8) Each phase or independent portion of the permitted system must be completed in accordance with the permitted plans and permit conditions prior to the initiation of the permitted use of site infrastructure located within the area served by that portion or phase of the system. Each phase or independent portion of the system must be completed in accordance with the permitted plans and permit conditions prior to transfer of responsibility for operation and maintenance of the phase or portion of the system to a local government or other responsible entity.

(9) For those systems that will be operated or maintained by an entity that will require an easement or deed restriction in order to enable that entity to operate or maintain the system in conformance with this permit, such easement or deed restriction must be recorded in the public records and submitted to the Department along with any other final operation and maintenance documents required by sections 9.0 and 10.0 of the Basis of Review for Environmental Resource Permit Applications Within the South Florida Water Management District - August 1995, prior to lot or unit sales or prior to the completion of the system, whichever occurs first. Other documents concerning the establishment and authority of the operating entity must be filed with the Secretary of State where appropriate. For those systems which are proposed to be maintained by the county or municipal entities, final operation and maintenance documents must be received by the Department when maintenance and operation of the system is accepted by the local government entity. Failure to submit the appropriate final documents will result in the permittee remaining liable for carrying out maintenance and operation of the permitted system and any other permit conditions.

(10) Should any other regulatory agency require changes to the permitted system, the permittee shall notify the Department in writing of the changes prior to implementation so that a determination can be made whether a permit modification is required.

(11) This permit does not eliminate the necessity to obtain any required federal, state, local and special district authorizations prior to the start of any activity approved by this permit . This permit does not convey to the permittee or create in the permittee any property right, or any interest in real property, nor does it authorize any entrance upon or activities on property which is not owned or controlled by the permittee, or convey any rights or privileges other than those specified in the permit and Chapter 40E-4 or Chapter 40E-40, F.A.C.

(12) The permittee is hereby advised that Section 253.77, F.S. states that a person may not commence any excavation, construction, or other activity involving the use of sovereign or other lands of the state, the title to which is vested in the Board of Trustees of the Internal Improvement Trust Fund without obtaining the required lease, license, easement, or other form of consent authorizing the proposed use. Therefore, the permittee is responsible for obtaining any necessary authorizations from the Board of Trustees prior to commencing activity on sovereignty lands or other state-owned lands.

(13) The permittee is advised that the rules of the South Florida Water Management District require the permittee to obtain a water use permit from the South Florida Water Management District prior to construction dewatering, unless the work qualifies for a general permit pursuant to subsection 40E-20.302(4), F.A.C., also known as the "No Notice" rule.

(14) The permittee shall hold and save the Department harmless from any and all damages, claims, or liabilities which may arise by reason of the construction, alteration, operation, maintenance, removal, abandonment or use of any system authorized by the permit.

(15) Any delineation of the extent of a wetland or other surface water submitted as part of the permit application, including plans or other supporting documentation, shall not be considered binding unless a specific condition of this permit or a formal determination under section 373.421(2), F.S., provides otherwise.

(16) The permittee shall notify the Department in writing within 30 days of any sale, conveyance, or other transfer of ownership or control of a permitted system or the real property on which the permitted system is located. All transfers of ownership or transfers of a permit are subject to the requirements of section 62-343.130, F.A.C. The permittee transferring the permit shall remain liable for corrective actions that may be required as a result of any violations prior to the sale, conveyance or other transfer of the system.

(17) Upon reasonable notice to the permittee, Department authorized staff with proper identification shall have permission to enter, inspect, sample and test the system to insure conformity with the plans and specifications approved by the permit.

(18) If historical or archaeological artifacts are discovered at any time on the project site, the permittee shall immediately notify the appropriate Department office.

(19) The permittee shall immediately notify the Department in writing of any previously submitted information that is later discovered to be inaccurate.

GENERAL CONSENT CONDITIONS:

(1) Authorizations are valid only for the specified activity or use. Any unauthorized deviation from the specified activity or use and the conditions for undertaking that activity or use shall constitute a violation. Violation of the authorization shall result in suspension or revocation of the grantee's use of the sovereignty submerged land unless cured to the satisfaction of the Board.

(2) Authorizations convey no title to sovereignty submerged land or water column, nor do they constitute recognition or acknowledgment of any other person's title to such land or water.

(3) Authorizations may be modified, suspended or revoked in accordance with their terms or the remedies provided in Sections 253.04 and 258.46, F.S., or Chapter 18-14, F.A.C.

(4) Structures or activities shall be constructed and used to avoid or minimize adverse impacts to sovereignty submerged lands and resources.

(5) Construction, use, or operation of the structure or activity shall not adversely affect any species which is endangered, threatened or of special concern, as listed in Rules 68A-27.003, 68A-27.004, and 68A-27.005, F.A.C.

(6) Structures or activities shall not unreasonably interfere with riparian rights. When a court of competent jurisdiction determines that riparian rights have been unlawfully affected, the structure or activity shall be modified in accordance with the court's decision.

(7) Structures or activities shall not create a navigational hazard.

(8) Structures shall be maintained in a functional condition and shall be repaired or removed if they become dilapidated to such an extent that they are no longer functional. This shall not be construed to prohibit the repair or replacement subject to the provisions of Rule 18-21.005, F.A.C., within one year, of a structure damaged in a discrete event such as a storm, flood, accident, or fire.

(9) Structures or activities shall be constructed, operated, and maintained solely for water dependent purposes, or for non-water dependent activities authorized under paragraph 18-21.004(1)(f), F.A.C., or any other applicable law.

SPECIFIC CONDITIONS

(1) **Drawings and Attachments.** Attached Drawing Exhibits 1 through 7, Permit Review Checklist, a table of Exotic Plants may be downloaded at http://www.fleppc.org/list/07list_brochure.pdf; and DEP forms: 62-343.900(3), (4), (5) and (7) F.A.C., which may be downloaded at http://www.dep.state.fl.us/water/wetlands/erp/forms.htm. The aforementioned forms which are applicable will be attached to and become part of this permit. If the attached permit drawings conflict with the specific conditions, then the specific conditions shall prevail. If the applicant does not have access to the Internet, the applicant shall call (561) 681-6649 to request the aforementioned forms and/or document.

(2) If the attached permit drawings conflict with the specific conditions, then the specific conditions shall prevail.

(3) After selection of the contractor to perform the authorized activities and prior to the initiation of any work authorized by this permit, the permittee (or authorized agent) and the contractor shall attend a pre-construction conference with a representative of the Department. The permittee shall contact the Department by phone or in writing to schedule the conference: Department of Environmental Protection, Southeast District, Submerged Lands & Environmental Resources Program, Compliance/Enforcement Section, Attention: Jason Andreotta, 400 N. Congress Avenue, Suite 200, West Palm Beach, Florida 33401, (phone: 561/ 681-6639).

(4) The work authorized by this permit shall not be conducted on any property, other than that owned by the permittee, without the prior written approval of that property owner.

(5) The permittee shall be responsible for ensuring that the permit conditions are explained to all construction personnel working on the project, and for providing each contractor and subcontractor with a copy of this permit before construction begins.

(6) This permit authorizes permanent impacts to approximately 0.09844 acres of wetland area as shown on the attached permit drawings only. No other areas are authorized to be impacted, which includes but is not limited to clearing with the use of heavy equipment, filling, or excavation. In addition to the barriers described in Specific Condition No. 12, the limits of impact shall be clearly marked during construction in a way that is visible and obvious to anyone, including someone operating heavy equipment, performing work on site. An orange construction fence or tall flagged stakes along the barriers are possible methods.

(7) All storage or stockpiling of tools, materials (i.e., lumber, pilings, debris) and operation of heavy equipment associated with construction shall be limited to the upland areas and the specific impact areas authorized by this permit. All cleared vegetation, excess lumber, scrap wood, trash, garbage, and any other type of debris shall be kept out of wetland areas in which impacts have not been authorized.

(8) To offset the unavoidable impacts to 0.09844 acres of wetlands associated with the Monitoring locations and temporary impacts due to construction in wetland areas, the applicant has purchased 0.12 Freshwater Herbaceous credits from the Everglades Mitigation Bank.

(9) No secondary impacts are expected to be caused by the installation and use of the monitoring wells or the access platforms. If secondary impacts should be discovered, the applicant shall assess these impacts and notify the Department within 30 days. Mitigation may be required for impacts not authorized in this permit.

RIGHTS OF AFFECTED PARTIES

This permit is hereby granted. This action is final and effective on the date filed with the Clerk of the Department unless a sufficient petition for an administrative hearing is timely filed under sections 120.569 and

120.57 of the Florida Statutes as provided below. If a sufficient petition for an administrative hearing is timely filed, this action automatically becomes only proposed agency action on the application, subject to the result of the administrative review process. Therefore, on the filing of a timely and sufficient petition, this action will not be final and effective until further order of the Department.

Mediation is not available.

A person whose substantial interests are affected by the Department's action may petition for an administrative proceeding (hearing) under sections 120.569 and 120.57 of the Florida Statutes. The petition must contain the information set forth below and must be filed (received by the clerk) in the Office of General Counsel of the Department at 3900 Commonwealth Boulevard, Mail Station 35, Tallahassee, Florida 32399-3000.

Under rule 62-110.106(4) of the Florida Administrative Code, a person whose substantial interests are affected by the Department's action may also request an extension of time to file a petition for an administrative hearing. The Department may, for good cause shown, grant the request for an extension of time. Requests for extension of time must be filed with the Office of General Counsel of the Department at 3900 Commonwealth Boulevard, Mail Station 35, Tallahassee, Florida 32399-3000, before the applicable deadline. A timely request for extension of time shall toll the running of the time period for filing a petition until the request is acted upon. If a request is filed late, the Department may still grant it upon a motion by the requesting party showing that the failure to file a request for an extension of time before the deadline was the result of excusable neglect.

If a timely and sufficient petition for an administrative hearing is filed, other persons whose substantial interests will be affected by the outcome of the administrative process have the right to petition to intervene in the proceeding. Intervention will be permitted only at the discretion of the presiding officer upon the filing of a motion in compliance with rule 28-106.205 of the Florida Administrative Code.

In accordance with rules 62-110.106(3), F.A.C., petitions for an administrative hearing by the applicant must be filed within 21 days of receipt of this written notice. Petitions filed by any persons other than the applicant, and other than those entitled to written notice under section 120.60(3) of the Florida Statutes must be filed within 21 days of publication of the notice or within 21days of receipt of the written notice, whichever occurs first. Under section 120.60(3) of the Florida Statutes, however, any person who has asked the Department for notice of agency action may file a petition within 21 days of receipt of such notice, regardless of the date of publication.

The petitioner shall mail a copy of the petition to the applicant at the address indicated above at the time of filing. The failure of any person to file a petition for an administrative hearing within the appropriate time period shall constitute a waiver of that person's right to request an administrative determination (hearing) under sections 120.569 and 120.57 of the Florida Statutes.

~~A petition that disputes the material facts on which the Department's action is based must contain the~~ following information:

(a) The name and address of each agency affected and each agency's file or identification number, if known;
(b) The name, address, and telephone number of the petitioner; the name, address, and telephone number of the petitioner's representative, if any, which shall be the address for service purposes during the course of the proceeding; and an explanation of how the petitioner's substantial interests are or will be affected by the agency determination;
(c) A statement of when and how the petitioner received notice of the agency decision;
(d) A statement of all disputed issues of material fact. If there are none, the petition must so indicate;
(e) A concise statement of the ultimate facts alleged, including the specific facts that the petitioner contends warrant reversal or modification of the agency's proposed action;

(f) A statement of the specific rules or statutes that the petitioner contends require reversal or modification of the agency's proposed action; and
(g) A statement of the relief sought by the petitioner, stating precisely the action that the petitioner wishes the agency to take with respect to the agency's proposed action.

A petition that does not dispute the material facts on which the Department's action is based shall state that no such facts are in dispute and otherwise shall contain the same information as set forth above, as required by rule 28-106.301.

Under sections 120.569(2)(c) and (d) of the Florida Statutes, a petition for administrative hearing must be dismissed by the agency if the petition does not substantially comply with the above requirements or is untimely filed.

This permit constitutes an order of the Department. Subject to the provisions of paragraph 120.68(7)(a) of the Florida Statutes, which may require a remand for an administrative hearing, the applicant has the right to seek judicial review of the order under section 120.68 of the Florida Statutes, by the filing of a notice of appeal under rule 9.110 of the Florida Rules of Appellate Procedure with the Clerk of the Department in the Office of General Counsel, 3900 Commonwealth Boulevard, Mail Station 35, Tallahassee, Florida, 32399-3000; and by filing a copy of the notice of appeal accompanied by the applicable filing fees with the appropriate district court of appeal. The notice of appeal must be filed within 30 days from the date when the order is filed with the Clerk of the Department.

Executed in West Palm Beach, Florida.

STATE OF FLORIDA DEPARTMENT
OF ENVIRONMENTAL PROTECTION

Jennifer K. Smith 2/11/10

Jennifer K. Smith Date
Environmental Administrator
Submerged Lands & Environmental Resources Program

JS/jk/IA

Copies furnished to:
Jason Andreotta, Compliance & Enforcement
USACOE Miami Office- Paul.Kruger@usace.army.mil
Lisa Spadafina, Miami-Dade DERM
Pamela Sweeney, FDEP Biscayne Bay Aquatic Preserve Manager

FILING AND ACKNOWLEDGMENT

FILED, on this date, under 120.52(7) of the
Florida Statutes, with the designated Department Clerk,
receipt of which is hereby acknowledged.

Rachel Osborne 2/11/10
Clerk Date

Prepared by Irene Arpayoglou

8 pages attached.

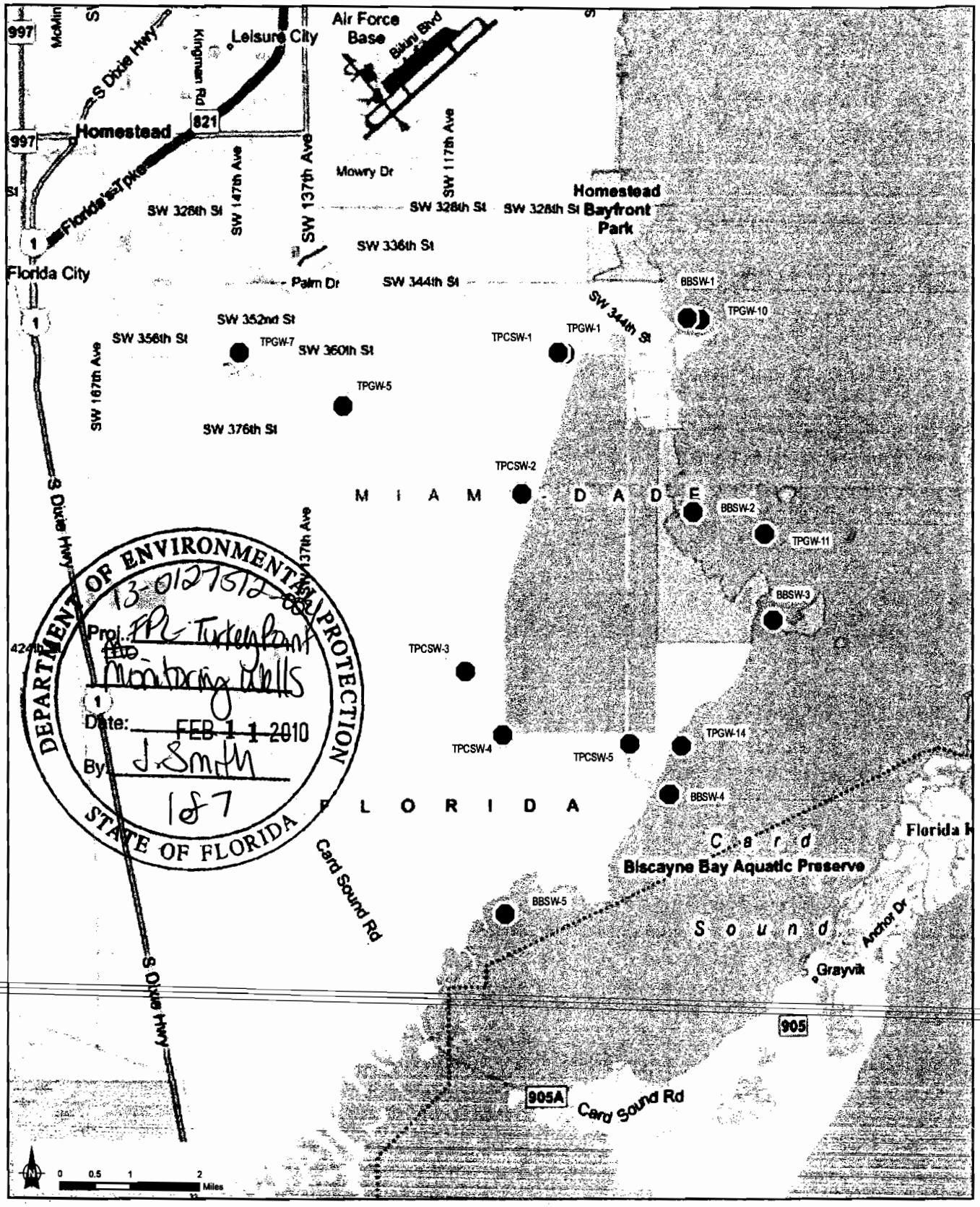

DEPARTMENT OF ENVIRONMENTAL PROTECTION
STATE OF FLORIDA
13-0127512-002
Proj.: FPL-Turkey Point Monitoring Wells
Date: FEB 11 2010
By: J. Smith
187

Key:

● Monitoring Location

FIGURE 2
Monitoring Stations under FDEP and USACE Jurisdiction

December 22, 2009

FPL, 2009; Microsoft Corporation, 2009.

L:\Turkey_Point\Maps\MXD\Permit_December\General_Location_Fig.mxd 122109

38

DEPARTMENT OF ENVIRONMENTAL PROTECTION
13-0127512-00
Proj.. FPL-Turkey Point
Monitoring Wells
FEB 11 2010
Date:
By: J. Smith
STATE OF FLORIDA

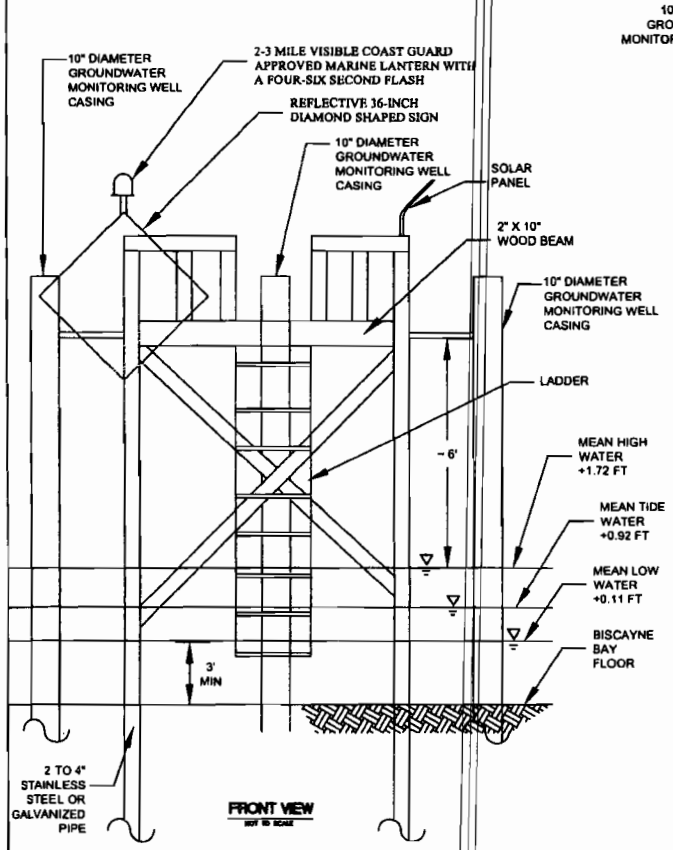

FRONT VIEW
NOT TO SCALE

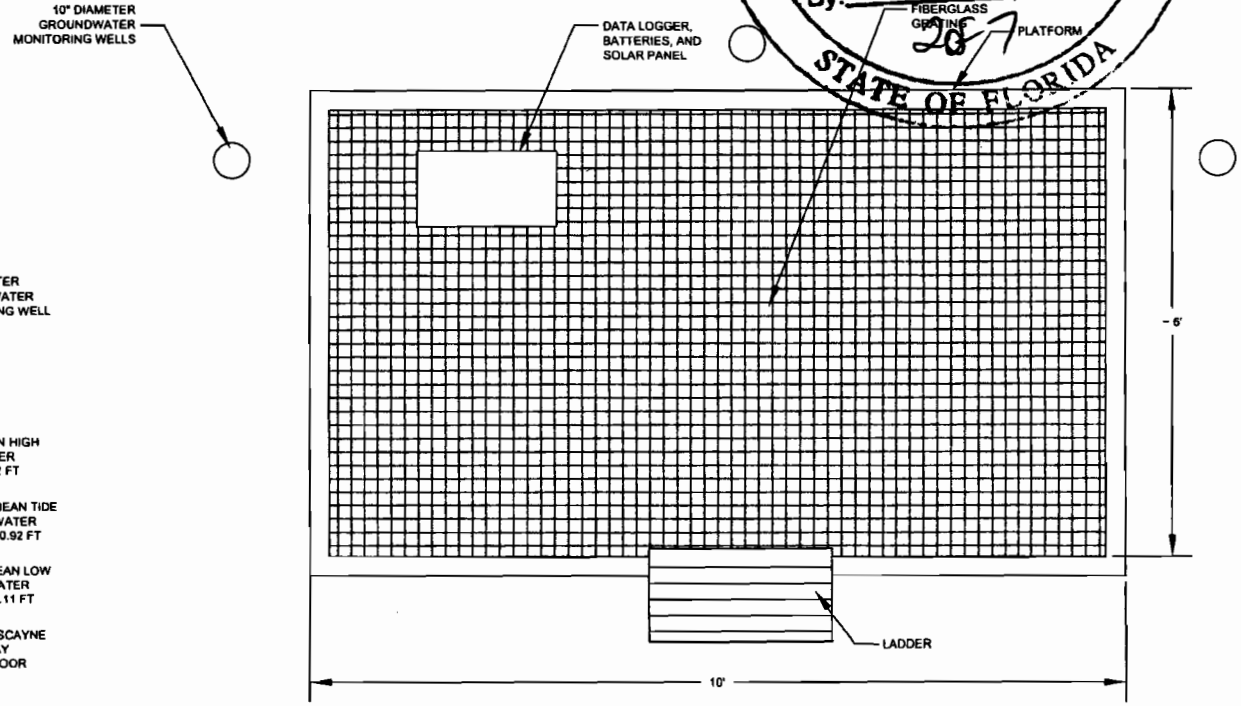

PLAN VIEW
NOT TO SCALE

NOTES:

1. DRAWING FOR ENVIRONMENTAL PERMITTING PURPOSES ONLY.
2. PLATFORM WILL BE MADE OF FIBERGLASS GRATE.
3. PLATFORM TO BE APPROXIMATELY 6' ABOVE MEAN SEA LEVEL.

NO.	DATE	ITEM	APP'D	DESCRIPTION

REVISIONS

ecology and environment, inc.

DESIGNED BY: D. CRAWLEY	CHECKED BY: J. BOLLETER
DRAWN BY: P. OWEN	APPROVED BY: J. BOLLETER

FPL TURKEY POINT WATER QUALITY MONITORING
DADE COUNTY, FLORIDA

BISCAYNE BAY GROUNDWATER MONITORING STATION TYPICAL

SCALE	DATE ISSUED	C.A.D. FILE NO.	LOCATION NO.	REV.
NTS	12/16/09	FPL-2953FC09-8.dwg	Sheet — 1 of 5	A

39

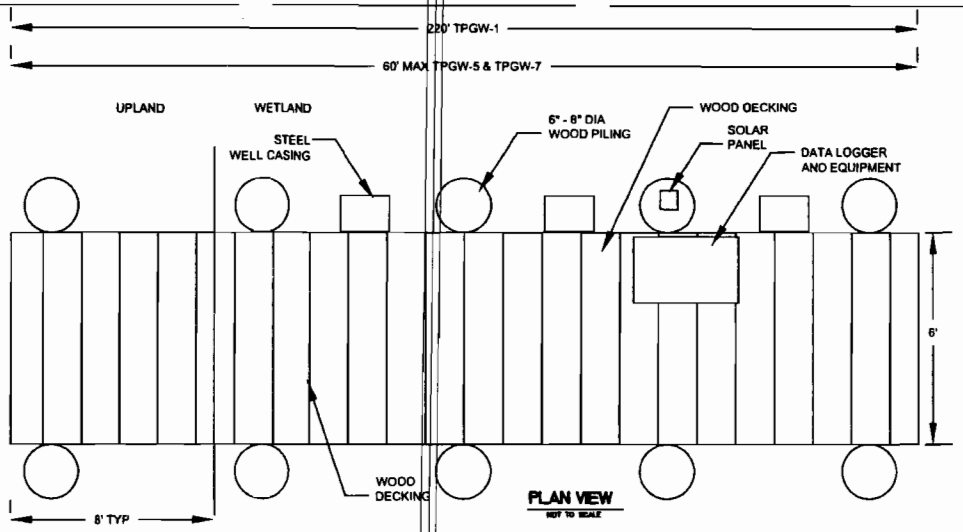

PLAN VIEW
NOT TO SCALE

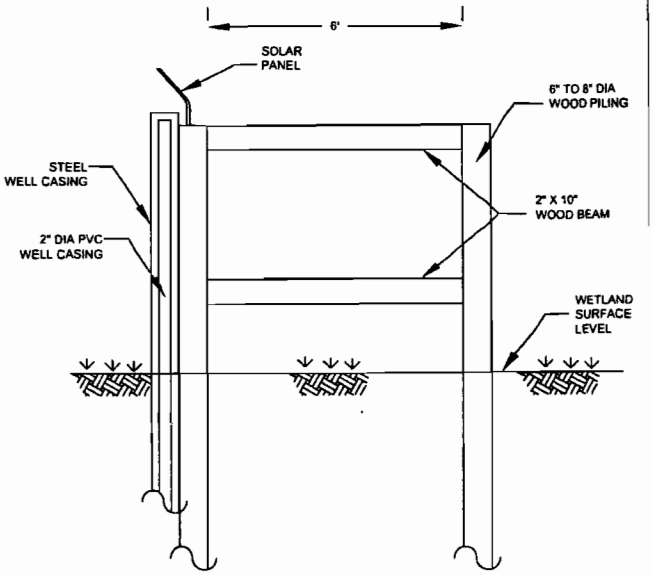

FRONT VIEW
NOT TO SCALE

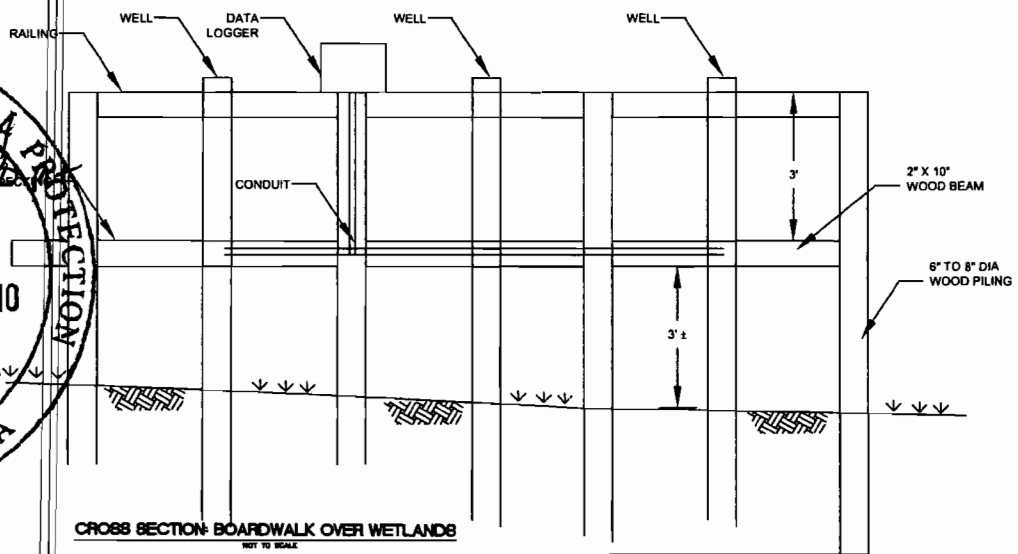

CROSS SECTION BOARDWALK OVER WETLANDS
NOT TO SCALE

DEPARTMENT OF ENVIRONMENTAL PROTECTION
13-0127512-00
Proj.: FPL-Turkey Point monitoring wells
Date: FEB 11 2010
By: J. Smith
3 of 7
STATE OF FLORIDA

NOTE:

DRAWING FOR ENVIRONMENTAL PERMITTING PURPOSES ONLY.

ecology and environment, inc.

DESIGNED BY	CHECKED BY
D. CRAWLEY	J. BOLLETER
DRAWN BY	APPROVED BY
P. OWEN	J. BOLLETER

FPL TURKEY POINT WATER QUALITY MONITORING
DADE COUNTY, FLORIDA

BOARDWAL OVER WETLANDS
TYPICAL

SCALE	DATE ISSUED	G.A.I. FILE NO.	DRAWING NO.
NTS	12/18/09	FPL-2952FC09-5.dwg	Sheet – 2 of 6

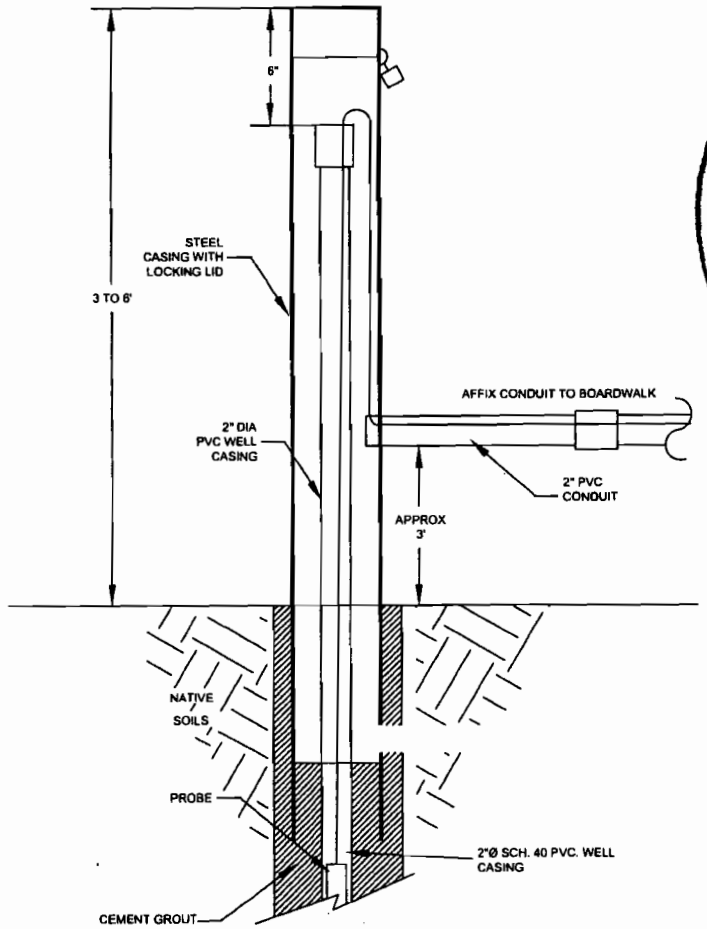

CROSS SECTION OF ABOVE-GRADE WELL COMPLETION

NOT TO SCALE

DEPARTMENT OF ENVIRONMENTAL PROTECTION
13-0127512-004
Proj. FPL-Turkey Point monitoring wells
FEB 11 2010
Date:
By: J. Smith
4 of 7
STATE OF FLORIDA

4

NOTES:

1. DRAWING FOR ENVIRONMENTAL PERMITTING PURPOSES ONLY.
2. DRAWING DEPICTS TYPICAL CONFIGURATION. ACTUAL WELL CLUSTER CONFIGURATION MAY CHANGE DUE TO SITE CONDITIONS IN ORDER TO MINIMIZE ENVIRONMENTAL IMPACTS.

ecology and environment, inc.

DESIGNED BY D. CRAWLEY	CHECKED BY J. BOLLETER
DRAWN BY P. OSEN	APPROVED BY J. BOLLETER

FPL TURKEY POINT WATER QUALITY MONITORING
DADE COUNTY, FLORIDA

BISCAYNE BAY GROUNDWATER MONITORING STATION TYPICAL

SCALE	DATE DRAWN	A.A.D. FILE NO.	DRAWING NO.	REV.
NTS	12/18/09	FPL-2952FC08-S.dwg	Sheet – 3 of 6	A

DEPARTMENT OF ENVIRONMENTAL PROTECTION
13-0187572-00
Proj.. FPL-Turkey Point
monitoring wells
Date: FEB 11 2010
By: L. Smith
5 of 7
STATE OF FLORIDA

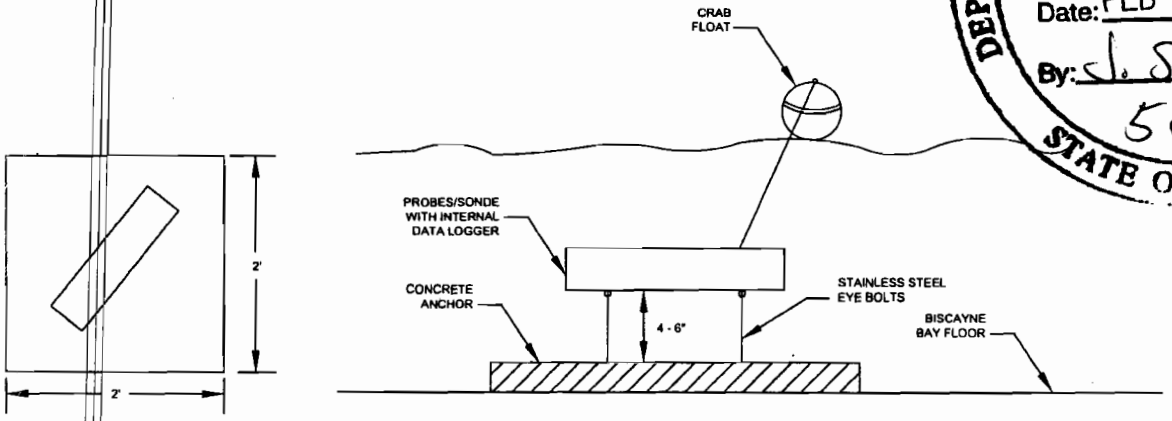

BISCAYNE BAY SURFACE WATER MONITORING STATION
NOT TO SCALE

NOTES:

1. DRAWING FOR ENVIRONMENTAL PERMITTING PURPOSES ONLY.
2. TO BE DEPLOYED IN AREAS WITH SANDY BOTTOMS ABSENT OF SEA GRASSES AND CORALS.

ecology and environment, inc.

D. CRAWLEY	J. BOLLETER
P. OWEN	J. BOLLETER

FPL TURKEY POINT WATER QUALITY MONITORING
DADE COUNTY, FLORIDA

BISCAYNE BAY SURFACE WATER MONITORING STATION TYPICAL

SCALE	DATE ISSUED	C.A.D. FILE NO.	SHEET NO.	REV.
NTS	12/16/09	FPL-2053FC00-6.dwg	Sheet – 4 of 6	A

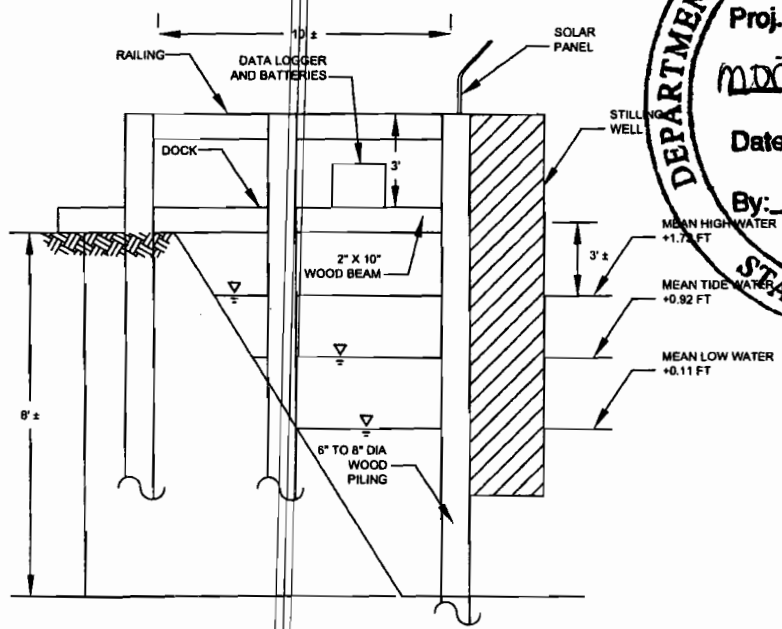

CROSS SECTION: TIDALLY INFLUENCED CANAL SURFACE WATER MONITORING STATIONS
NOT TO SCALE

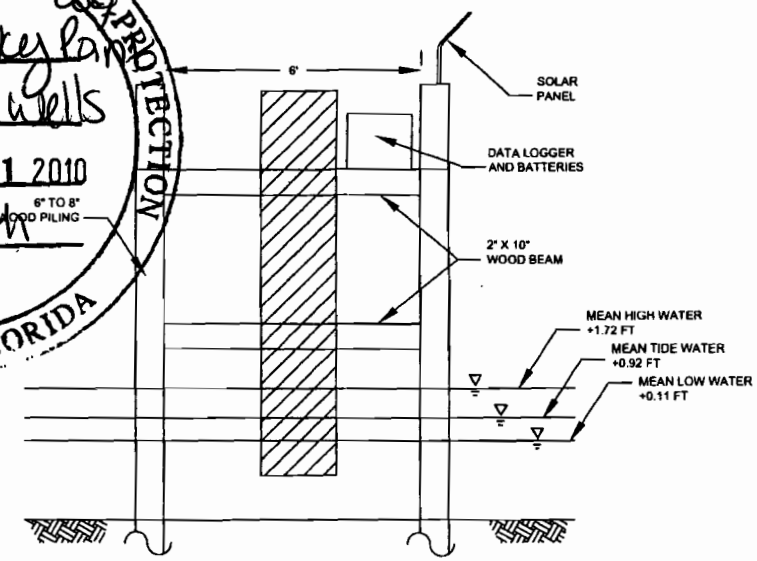

FRONT VIEW
NOT TO SCALE

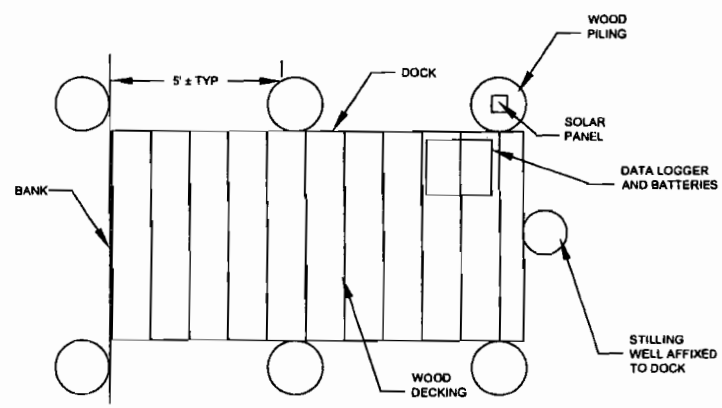

PLAN VIEW
NOT TO SCALE

DEPARTMENT OF ENVIRONMENTAL PROTECTION
STATE OF FLORIDA
13-0127512-004
Proj.: FPL-Turkey Point monitoring wells
Date: FEB 11 2010
By: J. Smith
6 of 7

NOTES:

1. DRAWING FOR ENVIRONMENTAL PERMITTING PURPOSES ONLY.
2. LENGTH OF DOCK WILL DEPEND ON SLOPE OF BANK AND DEPTH OF WATER.

NO.	DATE	DWN	APP'D	DESCRIPTION

REVISIONS

ecology and environment, inc.

DRAWN BY D. CRAWLEY	CHECKED BY J. BOLLETER
DRAWN BY P. OWEN	APPROVED BY J. BOLLETER

FPL TURKEY POINT WATER QUALITY MONITORING
DADE COUNTY, FLORIDA

TIDALLY INFLUENCED CANAL SURFACE WATER MONITORING STATION TYPICAL

SCALE	DATE ISSUED	A.A.D. FILE NO.	DRAWING NO.	REV.
NTS	12/18/09	FPL-2952FC09-8.dwg	Sheet – 5 of 6	A

43

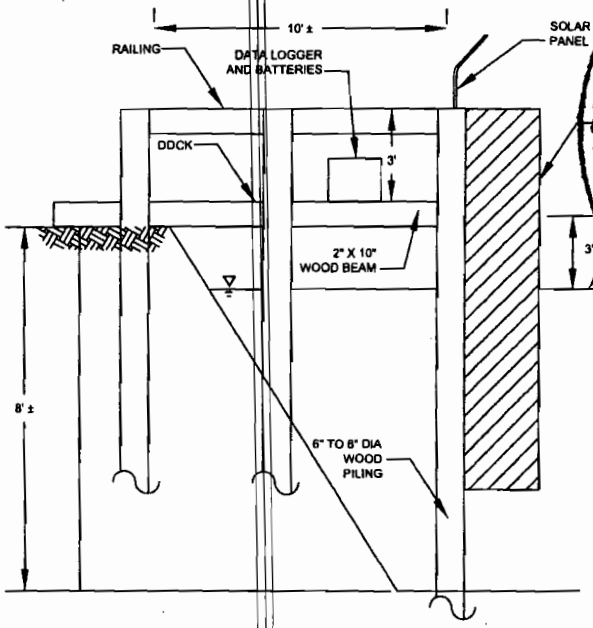

CROSS SECTION: FRESHWATER CANAL SURFACE WATER MONITORING STATIONS
NOT TO SCALE

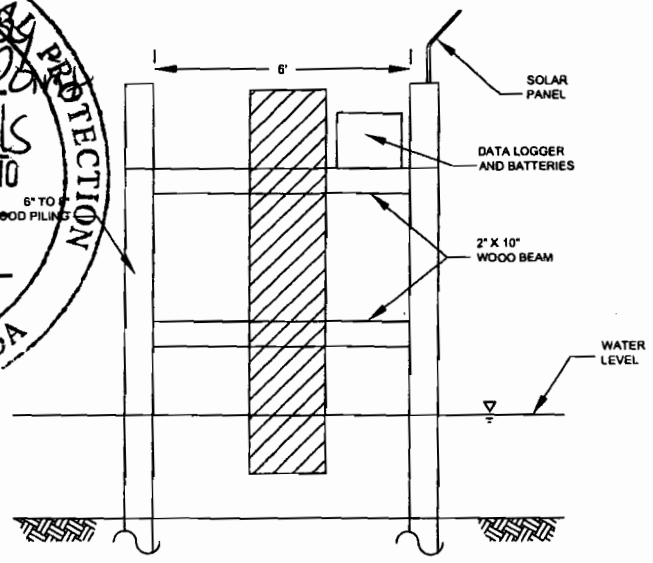

FRONT VIEW
NOT TO SCALE

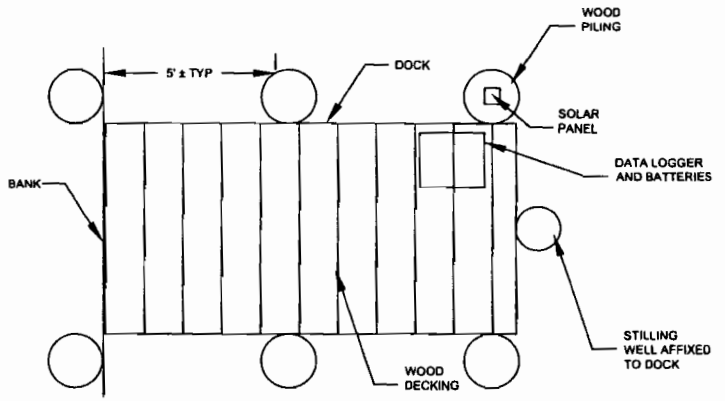

PLAN VIEW
NOT TO SCALE

DEPARTMENT OF ENVIRONMENTAL PROTECTION
13-0127512-004
Proj.: FPL-Turkey Point monitoring wells
FEB 01 2010
Date:
By: J. Smith
7 of 7
STATE OF FLORIDA

NOTES:

1. DRAWING FOR ENVIRONMENTAL PERMITTING PURPOSES ONLY.
2. DOCK TO BE ~3' IN WIDTH.
3. LENGTH OF DOCK WILL DEPEND ON SLOPE OF BANK AND DEPTH OF WATER.

NO.	DATE	DSN	APP'D	DESCRIPTION

REVISIONS

ecology and environment, inc.

DRAWN BY: D. CRAWLEY	CHECKED BY: J. BOLLETER
DRAWN BY: P. OWEN	APPROVED BY: J. BOLLETER

FPL TURKEY POINT WATER QUALITY MONITORING
DADE COUNTY, FLORIDA

FRESHWATER CANAL SURFACE WATER MONITORING STATION TYPICAL

SCALE	DATE ISSUED	D.A.D. FILE NO.	DRAWING NO.	REV.
NTS	12/18/09	FPL-2052FC09-7.dwg	Sheet – 6 of 6	A

44

Attachment E

Project Report

PROJECT REPORT
CLASS I PERMIT APPLICATION NO. 2009-CLI-PER-00387

Application by the Florida Power & Light Company for a Class I Permit to Install Surface Water and Groundwater Monitoring Wells and Access Platforms within the Tidal Waters of Miami-Dade County

Date: January 27, 2010

Staff's recommendation of approval for the above-referenced permit application is based on the applicable evaluation factors under Section 24-48.3 of the Code of Miami-Dade County, Florida. The following is a summary of the proposed project with respect to each applicable evaluation factor:

1. **Potential Adverse Environmental Impact** – The potential for any adverse environmental impacts from the construction of the proposed groundwater and surface water monitoring stations is minimal. The construction of the monitoring stations will include drilling of boreholes and installation of wells and access platforms. Whenever possible, the proposed stations will be sited on barren submerged bottom or over sparse resources. The proposed project may result in minor water quality impacts during construction operations. However, the Class I permit shall require that a water quality monitoring plan and proper turbidity controls be implemented during the proposed work to ensure turbidity levels within the surrounding waters does not exceed State and County water quality standards. For any unavoidable adverse environmental impacts resulting from the installation of the stations or related construction operations, the applicant has agreed to provide a payment to the Biscayne Bay Environmental Enhancement Trust Fund (BBEETF).

   The proposed project sites are not located within areas designated as essential manatee habitat for the West Indian Manatee (*Trichechus manatus*) by the Miami-Dade County Manatee Protection Plan (MDCMPP). However, the Class I permit will require that all standard manatee construction permit conditions shall be followed during all in-water construction operations.

2. **Potential Cumulative Adverse Environmental Impact** – The proposed project is not reasonably expected to have cumulative adverse environmental impacts.

3. **Hydrology** - The proposed project, as designed, is not reasonably expected to adversely affect surface water drainage or retention of stormwater.

4. **Water Quality** – The proposed project may temporarily affect surface water quality during construction operations. However, these impacts will be minimized by the implementation of proper turbidity control devices. In addition the proposed project will facilitate water quality monitoring, to determine if there are any impacts as a result of the current operations of the Turkey Point Power Plant (power plant) or the uprate project.

5. **Wellfields** – Not applicable.

6. **Water Supply** – Not applicable.

7. **Aquifer Recharge** – The proposed project will be used to monitor water quality to determine if there are any impacts as a result of the current operations of the power plant or the uprate project.

8. **Aesthetics** – The proposed project is not reasonably expected to have any negative aesthetic impacts. The final location of the proposed monitoring wells and dimensions of the access platforms may be modified based on the results of the drilling of the boreholes and on the presence of any existing seagrass resources. However, each access platform shall be no larger than the minimum necessary to house the monitoring equipment and facilitate data collection. During construction there may be temporary aesthetic impacts related to the presence of machinery and equipment associated with the construction activities.

9. **Navigation** – The proposed project is not reasonably expected to adversely affect navigation. The proposed groundwater monitoring stations within Biscayne Bay will meet the requirements of the United States Coast Guard. The access platforms will be equipped with two (2) to three (3) mile visible Coast Guard approved marine lanterns and reflective diamond shaped signs.

10. **Public Health** - The proposed project is not reasonably expected to adversely affect public health.

11. **Historic Values** - The proposed project is not reasonably expected to adversely affect historic values.

12. **Archaeological Values** - The proposed project is not reasonably expected to adversely affect archaeological values.

13. **Air Quality** – The proposed project is not reasonably expected to adversely affect air quality.

14. **Marine and Wildlife Habitats** – The proposed project will result in minimal disturbances to marine and wildlife habitats from the construction of the monitoring stations. The construction of the monitoring stations will include drilling of boreholes and installation of wells and access platforms. Whenever possible, the proposed stations will be sited on barren submerged bottom or over sparse resources. For any unavoidable adverse environmental impacts resulting from the installation of the stations or related construction operations, the applicant has agreed to provide a payment to the BBEETF.

    The proposed project sites are not located within areas designated as essential manatee habitat for the West Indian Manatee by the MDCMPP. However, the Class I permit will require that all standard manatee construction permit conditions shall be followed during all in-water construction operations.

15. **Wetland Soils Suitable for Habitat** – The proposed project does not involve any work in wetland soils.

16. **Floral Values** – The proposed project will result in minimal impacts to marine floral values. Whenever possible, the proposed stations will be sited on barren submerged bottom or over sparse resources, and impacts will be minimized by the implementation of proper turbidity control devices. For any unavoidable adverse environmental impacts resulting from the installation of the stations or related construction operations, the applicant has agreed to provide a payment to the BBEETF.

17. **Fauna Values** – The proposed project will result in the removal of the benthic soils in the borehole locations. Although the soils may support limited numbers of marine infauna (i.e. benthic fauna living within the substrate), the soils do not support any significant marine resources. In addition, the project sites are not located within areas identified as essential manatee habitat for the West Indian Manatee as per the MDCMPP. However, the Class I permit will require that all standard manatee construction permit conditions shall be followed during all in-water construction operations.

18. **Rare, Threatened and Endangered Species** – The proposed project is not reasonably expected to adversely affect any rare, threatened or endangered species. Although some of the monitoring station locations have the potential to be utilized by *Crocodylus acutus* (American Crocodiles) and *Mycteria americana* (Wood Storks), the impacts that will occur as a result of installation and operation of the stations have been minimized. The project sites are not located within areas identified as essential manatee habitat for the West Indian Manatee as per the MDCMPP. However, the Class I permit will require that all standard manatee construction permit conditions shall be followed during all in-water construction operations.

19. **Natural Flood Damage Protection** - The proposed project is not reasonably expected to adversely affect surface water drainage or retention of stormwater.

20. **Wetland Values** – The proposed project does not involve dredging or filling of wetlands.

21. **Land Use Classification** – Pursuant to Section 24-48.2(II)(A)(7), of the Code of Miami-Dade County, Florida, a substantiating letter shall be submitted stating that the proposed project does not violate any zoning laws. Said letter will be submitted after the approval by the Board of County Commissioners and prior to the issuance of a Class I permit.

22. **Recreation** - The proposed project does not conflict with the recreation element of the Miami-Dade County Comprehensive Development Master Plan.

23. **Other Environmental Values Affecting the Public Interest** – The proposed project is not reasonably expected to adversely affect environmental values affecting the public interest. The proposed work will occur on the upland areas and submerged lands owned or managed by the Board of Trustees of the Internal Improvement Trust Fund of the State of Florida, the Florida Department of Environmental Protection, and Biscayne National Park. The applicant has obtained authorization from these agencies for the use of the subject lands.

24. **Conformance with Standard Construction Procedures and Practices and Design and Performance Standards** – The proposed project complies with the standard construction procedures and practices and design and performance standards of the applicable portions of the following:

    a) Miami-Dade County Public Works Manual
    b) Biscayne Bay Management Plan (Sections 33D-1 through 33D-4 of the Code of Miami-Dade County)
    c) Chapter 33B of the Code of Miami-Dade County

25. **Comprehensive Environmental Impact Statement (CEIS)** - In the opinion of the Director, the proposed project is not reasonably expected to result in significant adverse environmental impacts or cumulative adverse environmental impacts. Therefore, a CEIS was not required by DERM to evaluate the project.

26. **Conformance with All Applicable Federal, State and Local Laws and Regulations** The proposed project is in conformance with the following applicable State, Federal and local laws and regulations:

    a) United States Clean Water Act (United States Army Corps of Engineers permit is required)
    b) Chapter 24 of the Code of Miami-Dade County
    c) Florida Department of Environmental Protection (permit is required)

27. **Conformance with the Miami-Dade County Comprehensive Development Master Plan (CDMP)** - In the opinion of DERM, the proposed project is in conformance with the CDMP. The following is a summary of the proposed project as it relates to the CDMP:

LAND USE ELEMENT I:

Objective 2/Policy 2A - Level of Service. The proposed project does not involve new or significant expansion of existing urban land uses.

Objective 3/Policies 3A, 3B, 3C - Protection of natural resources and systems. – The proposed project is consistent with the Conservation and Coastal Management Elements of the CDMP. The project is compatible with surrounding land uses in Biscayne Bay and does not involve development in the Big Cypress area of Critical State concern or the East Everglades.

TRANSPORTATION ELEMENT II

Aviation Subelement/Objective 9 - Aviation System Expansion - There is no aviation element to the proposed project.

Port of Miami River Subelement/Objective 3 - Minimization of impacts to estuarine water quality and marine resources. The proposed project is not located within the Miami River.

CONSERVATION, AQUIFER RECHARGES AND DRAINAGE ELEMENT IV:

Objective 3/Policies 3A, 3B, 3D - Wellfield protection area protection. - The proposed project is not located within a wellfield protection area.

Objective 3/Policy 3E - Limestone mining within the area bounded by the Florida Turnpike, the Miami-Dade/Broward Levee, N.W. 12 Street and Okeechobee Road. - The proposed project is not located within this area.

Objective 4/Policies 4A, 4B, 4C - Water storage, aquifer recharge potential and maintenance of natural surface water drainage. - The proposed project will not adversely affect water storage, aquifer recharge potential or natural surface water drainage.

Objective 5/Policies 5A, 5B, 5F - Flood protection and cut and fill criteria. – The proposed project does not compromise flood protection, involve filling for development purposes, and is not related to cut and fill activities.

Objective 6/Policy 6A - Areas of highest suitability for mineral extraction. - The proposed project is not located in an area proposed or suitable for mineral extraction.

Objective 6/Policy 6B - Guidelines for rock quarries for the re-establishment of native flora and fauna. - The proposed project does not involve the dredging of a rock quarry.

Objective 6/Policy 6D - Suitable fill material for the support of development. – The proposed project does not involve filling for the purposes of development.

Objective 7/Policy 7A - No net loss of high quality, relatively unstressed wetlands. – The proposed project will not result in a net loss of any such wetlands.

Objective 9/Policies 9A, 9B, 9C - Protection of habitat critical to Federal or State-designated threatened or endangered species. - The proposed project is not reasonably expected to adversely affect habitat critical to any endangered, rare, or threatened species. Although some of the monitoring station locations have the potential to be utilized by *Crocodylus acutus* (American Crocodiles) and *Mycteria americana* (Wood Storks), the impacts that will occur as a result of installation and operation of the stations have been minimized. The project sites are not located within areas identified as essential manatee habitat for the West Indian Manatee as per the MDCMPP. However, the Class I permit will require that all standard manatee construction permit conditions shall be followed during all in-water construction operations.

COASTAL MANAGEMENT ELEMENT VII:

Objective 1/Policy 1A - Tidally connected mangroves in mangrove protection areas – There are no mangroves in the project areas and the project is not located within a designated "Mangrove Protection Area."

Objective 1/ Policy 1B - Natural surface flow into and through coastal wetlands. – The project will not affect natural surface flow into and through coastal wetlands.

Objective 1/ Policy 1C - Elevated boardwalk access through mangroves. – The project does not involve access through mangroves.

Objective 1/Policy 1D - Protection and maintenance of mangrove forests and related natural vegetational communities. - The proposed project does not involve work in mangrove forests, coastal hammock, or other natural vegetational communities.

Objective 1/Policy 1E - Mitigation for the degradation and destruction of coastal wetlands. Monitoring and maintenance of mitigation areas. – The proposed project does not involve the degradation and destruction of coastal wetlands and therefore does not involve monitoring of mitigation for impacts to coastal wetlands.

Objective 1/Policy 1G - Prohibition on dredging or filling of grass/algal flats, hard bottom or other viable benthic communities, except as provided for in Chapter 24 of the Code of Miami-Dade County, Florida. – The proposed work does not involve the dredging or filling of grass/algal flats, hard bottom or other viable benthic communities.

Objective 2/Policies 2A, 2B - Beach restoration and renourishment objectives. - The proposed project does not involve beach restoration or renourishment.

Objective 3/Policies 3E, 3F - Location of new cut and spoil areas for proper stabilization and minimization of damages. - The proposed project does not involve the development or identification of new cut or spoil areas.

Objective 5/Policy 5B - Existing and new areas for water-dependent uses. - The proposed project does not create or eliminate any water dependent uses.

Objective 5/Policy 5D - Consistency with Chapter 33D, Miami-Dade County Code (shoreline access, environmental compatibility of shoreline development) – The proposed project sites are not located within the review boundaries of the Shoreline Development Review Committee. Therefore, the thresholds for review under the Shoreline Ordinance do not apply and the proposed project is not subject to shoreline development review.

Objective 5/Policy 5F - The siting of water dependent facilities. - The proposed project does not involve the creation of any new water dependent facilities.

28. **Conformance with Chapter 33B, Code of Miami-Dade County** (East Everglades Zoning Overlay Ordinance) – The proposed project is not located within the East Everglades Area.

29. **Conformance with Miami-Dade County Ordinance 81-19** (Biscayne Bay Management Plan Sections 33D-1 through 33D-4 of the Code of Miami-Dade County) - The proposed project is consistent with the Biscayne Bay Management Plan.

30. **Conformance with the Miami-Dade County Manatee Protection Plan -** The proposed project sites are not located within areas designated as essential manatee habitat for the West Indian Manatee by the Miami-Dade County Manatee Protection Plan (MDCMPP). However, the Class I permit will require that all standard manatee construction permit conditions shall be followed during all in-water construction operations.

31. **Consistency with Miami-Dade County Criteria for Lake Excavation** – The proposed project does not involve lake excavation.

32. **Municipality Recommendation** – Pursuant to Section 24-48.2(II)(A)(7), Code of Miami-Dade County, Florida, a substantiating letter shall be submitted stating that the proposed project does not violate any zoning laws. Said letter will be submitted after the approval by the Board of County Commissioners and prior to the issuance of the Class I permit.

33. **Coastal Resources Management Line** - A coastal resources management line was not required for the proposed project, pursuant to Section 24-48.2(II)(A)(10)(b) of the Code of Miami-Dade County, Florida.

34. **Maximum Protection of a Wetland's Hydrological and Biological Functions** – The proposed project is not expected to impact wetland hydrological and biological functions.

35. **Class I Permit Applications Proposing to Exceed the Boundaries Described in Section D-5.03(2)(a) of the Miami-Dade County Public Works Manual**

    i. **Whether the proposed exceedance is the minimum necessary to avoid seagrasses or other valuable environmental resources** – Not applicable.
    ii. **Whether the proposed exceedance is the minimum necessary to achieve adequate water depth for mooring of a vessel** – Not applicable.
    iii. **Whether the applicant has provided notarized letters of consent to DERM from adjoining riparian property owners** – Not applicable.
    iv. **Whether any letters of objection from adjoining riparian property owners were received by DERM** – Not applicable.

The proposed project was also evaluated for compliance with the standards contained in Section 24-48.3(2),(3), and (4) of the Code of Miami-Dade County, Florida. The following is a summary of how the standards relate to the proposed project.

24-48.3 (2) Dredging and Filling for Class I Permit - The proposed project does not involve the dredging or filling of tidal waters.

24-48.3 (3) Minimum Water Depth Required for Boat Slips Created by the Construction or Placement of Fixed or Floating Docks and Piers, Piles and Other Structures Requiring a Permit Under Article IV, Division 1 of Chapter 24 of the Code of Miami-Dade County - The proposed project does not involve the creation of a boat slip.

24-48.3 (4) Clean Fill in Wetlands – The proposed project does not involve placing clean fill in wetlands.

BASED ON THE FOREGOING, IT IS RECOMMENDED THAT A CLASS I PERMIT BE APPROVED.

Lisa. M. Spadafina, Manager
Coastal Resources Section

Lourdes Barrelli, Biologist II
Coastal Resources Section