Memorandum

MIAMI-DADE COUNTY

Date: November 15, 2011

To: Honorable Chairman Joe A. Martinez
and Members, Board of County Commissioners

Agenda Item No. 14(A)(3)

From: Carlos A. Gimenez
Mayor

Subject: Recommendation for Approval to Award Contract for Dockside Container Gantry Cranes for Port of Miami

RECOMMENDATION

It is recommended that the Board of County Commissioners approve award of Contract No. 750 to Shanghai Zhenhua Heavy Industries Co., Ltd for the design, fabrication, assembly, painting, transportation, installation, testing and commissioning of four (4) 65 Long Ton Capacity, Super-Post-Panamax, "H" Frame, Dockside, Rail-mounted Gantry Container Handling Cranes.

CONTRACT NUMBER: 750

CONTRACT TITLE: Dockside Container Handling Gantry Cranes at Port of Miami

TERM: 24 months

APPROVAL TO ADVERTISE: October 28, 2010

METHOD OF AWARD: To the responsive and responsible proposer whose offer results in the best value to the County.

CONTRACT AMOUNT: $39,300,000

BACKGROUND

A Request for Proposals was issued for the design, fabrication, assembly, painting, transportation, installation, testing, and commissioning of two (2) 65 Long Ton Capacity, Super-Post-Panamax, "H" Frame, Dockside, Rail-mounted Gantry Container Handling Cranes, with an option to purchase an additional two (2) cranes. The Contractor shall install and make the cranes fully operational at the Lummus Island Container Crane Facility at the Port of Miami, 540 calendar days from the date of Notice-to-Proceed. The Port is recommending the purchase of four cranes to take advantage of very favorable prices submitted by the contractor, as well as substantial savings in transportation costs, should the Port opt to buy the additional cranes at a later date. Additionally, the availability of these additional cranes by June 2013 will substantially place the port in a much more favorable competitive position vis-à-vis competing ports. The cost per crane is $9,450,000 for a total of $37,800,000 and $1,500,000 for additional optional crane components.

Two firms responded with proposals, and a third, stated it could not submit a proposal due to a heavy workload. As further described in the attached Report of the Selection Committee, both proposers were invited to oral presentations. The Selection Committee recommended that staff enter into negotiations with Shanghai Zhenhua Heavy Industries Co., Ltd., the highest ranked proposer.

The basis of this recommendation is:

- Overall past performance and experience in providing cranes;
- Compliance with the technical specification/design configurations;
- Approach in providing cranes, compliance with safety factors, and meeting schedules;
- Adherence to warranty requirements; and
- Significantly better pricing.

USING/MANAGING AGENCIES AND FUNDING SOURCES:

Department	Allocation	Funding Source	Contract Manager
Port of Miami	$ 39,300,000	Bond Proceeds (payable from Port of Miami revenues)	Juan Kuryla
Total	**$ 39,300,000**		

PROCUREMENT CONTRACTING OFFICER: Andrew Zawoyski, CPPO

VENDOR RECOMMENDED FOR AWARD:

Awardee	Address	Principal
Shanghai Zhenhua Heavy Industries, Co. Ltd (Non-Local)	3470 Pu Dong Nan Lu Shanghai 200125, P.R. China	Liu Qi Zhong, Vice President

VENDOR NOT RECOMMENDED FOR AWARD: Cargotec USA, Inc.

PERFORMANCE DATA: There are no performance issues with the recommended firm.

COMPLIANCE DATA: There are no compliance issues with the recommended firm.

REVIEW COMMITTEE DATE: September 1, 2010

CONTRACT MEASURES: A Small Business Enterprise (SBE) Selection Factor was applied in accordance with the Ordinance.

LIVING WAGE: The services being provided are not covered under the Living Wage Ordinance.

USER ACCESS PROGRAM: The User Access Program provision will apply. The 2% program discount will be collected on all purchases.

LOCAL PREFERENCE: The Local Preference was applied in accordance with the Ordinance.

Deputy Mayor

MEMORANDUM

(Revised)

TO: Honorable Chairman Joe A. Martinez and Members, Board of County Commissioners

DATE: November 15, 2011

FROM: R. A. Cuevas, Jr. County Attorney

SUBJECT: Agenda Item No. 14(A)(3)

Please note any items checked.

_____ **"3-Day Rule" for committees applicable if raised**

_____ **6 weeks required between first reading and public hearing**

_____ **4 weeks notification to municipal officials required prior to public hearing**

_____ **Decreases revenues or increases expenditures without balancing budget**

_____ **Budget required**

_____ **Statement of fiscal impact required**

_____ **Ordinance creating a new board requires detailed County Manager's report for public hearing**

_____ **No committee review**

_____ **Applicable legislation requires more than a majority vote (i.e., 2/3's ____, 3/5's ____, unanimous_____) to approve**

✓ **Current information regarding funding source, index code and available balance, and available capacity (if debt is contemplated) required**

Approved _____ Mayor

Veto _____

Override _____

Agenda Item No. 14(A)(3)
11-15-11

RESOLUTION NO. _____

RESOLUTION AUTHORIZING EXECUTION OF AN AGREEMENT IN THE AMOUNT OF $39,300,000 WITH SHANGHAI ZHENHUA HEAVY INDUSTRIES CO., LTD TO OBTAIN FOUR DOCKSIDE CONTAINER GANTRY CRANES FOR MIAMI DADE SEAPORT DEPARMTENT FOR THE PORT OF MIAMI, AUTHORIZING THE COUNTY MAYOR OR COUNTY MAYOR'S DESIGNEE TO EXECUTE AN AGREEMENT FOR AND ON BEHALF OF MIAMI-DADE COUNTY AND TO EXERCISE ANY CANCELLATION AND RENEWAL PROVISIONS, AND TO EXERCISE ALL OTHER RIGHTS CONTAINED THEREIN CONTRACT NO. 750

WHEREAS, this Board desires to accomplish the purposes outlined in the accompanying memorandum, a copy of which is incorporated herein by reference,

NOW, THEREFORE, BE IT RESOLVED BY THE BOARD OF COUNTY COMMISSIONERS OF MIAMI-DADE COUNTY, FLORIDA, that this Board approves the execution of an agreement in the amount of $39,300,000 with Shanghai Zhenhua Heavy Industries Co., LTD, in substantially the form attached hereto and made a part hereof, and authorizes the County Mayor or County Mayor's designee to execute same for and on behalf of Miami-Dade County and to exercise any cancellation and renewal provisions and all other rights contained therein.

The foregoing resolution was offered by Commissioner , who moved its adoption. The motion was seconded by Commissioner and upon being put to a vote, the vote was as follows:

Joe A. Martinez, Chairman
Audrey M. Edmonson, Vice Chairwoman

Bruno A. Barreiro	Lynda Bell
Esteban L. Bovo, Jr.	Jose "Pepe" Diaz
Sally A. Heyman	Barbara J. Jordan
Jean Monestime	Dennis C. Moss
Rebeca Sosa	Sen. Javier D. Souto
Xavier L. Suarez	

The Chairperson thereupon declared the resolution duly passed and adopted this 15th day of November, 2011. This resolution shall become effective ten (10) days after the date of its adoption unless vetoed by the Mayor, and if vetoed, shall become effective only upon an override by this Board.

MIAMI-DADE COUNTY, FLORIDA
BY ITS BOARD OF
COUNTY COMMISSIONERS

HARVEY RUVIN, CLERK

By:_____
Deputy Clerk

Approved by County Attorney as
to form and legal sufficiency.

Richard Seavey

Dockside Container Handling Cranes at the Seaport

CONTRACT NO. 750

THIS AGREEMENT made and entered into as of this _____ day of _____ by and between Shanghai Zhenhua Heavy Industries Co., Ltd, a corporation organized and existing under the laws of the People's Republic of China having its principal office at 3470 Pu Dong Nan-Lu, Shanghai, P.R. China, 200125 (hereinafter referred to as the "Contractor"), and Miami-Dade County, a political subdivision of the State of Florida, having its principal office at 111 N.W. 1st Street, Miami, Florida 33128 (hereinafter referred to as the "County");

WITNESSETH:

WHEREAS, the Contractor has offered to provide Dockside Container Handling Cranes (Cranes) related spreaders, parts, components, and services that shall conform to the Technical Specifications, Scope of Work (Appendix A), Miami-Dade County's Request for Proposals (RFP) No. 750 and all associated addenda and attachments, incorporated herein by reference; and the requirements of this Agreement; and,

WHEREAS, the Contractor has submitted a written proposal dated March 3, 2011, hereinafter referred to as the "Contractor's Proposal" which is incorporated by reference herein; and,

WHEREAS, the County desires to procure from the Contractor such Cranes and related items for the County, in accordance with the terms and conditions of this Agreement;

NOW, THEREFORE, in consideration of the mutual covenants and agreements herein contained, the parties hereto agree as follows:

ARTICLE 1. DEFINITIONS

The following words and expressions used in this Agreement shall be construed as follows, except when it is clear from the context that another meaning is intended:

a) The words "Cash Bond" to mean a certified check or cashier's check furnished by the Contractor in lieu of a Surety Bond for either a Contract Bond, or a Maintenance Bond covering the same required amounts and providing the same guarantee as contained in the respective Surety Bond.

b) The words "Certificate of Acceptance for Substantial Completion" to mean the document which the County shall prepare and submit to the Contractor indicating that the Work has been substantially completed except for "punch list" items which shall be enumerated and made a part of this Certificate of Acceptance for Substantial Completion, and which shall initial payment at further detailed in this Agreement.

c) The words "Certificate of Final Acceptance" to mean the document which the County shall prepare and submit to the Contractor certifying that all Work on the Project has been completed, including all "punch list" items and which shall initiate final payment to the Contractor as further detailed in this Agreement.

d) The words "Contract" or "Contract Documents" or "Agreement" to mean collectively these terms and conditions, Appendix A - the Scope of Work (which includes Attachment A, the Technical Specifications, Drawings and Spare Parts List); Appendix B - the Price Schedule, Appendix C - Bond Surety/Cash Format; and Appendix D – Badging Security Requirements; RFP No. 750 and all associated addenda and attachments, the Contractor's Proposal, and all other attachments hereto and all amendments issued hereto.

e) The words "Contract Bond" all also known as the "Contractor's Performance and Payment Bond" or "Performance Bond" to mean a Cash Bond, furnished by the Contractor, or a Surety Bond furnished by the Contractor and its Surety as a guaranty of good faith that the Contractor will execute the Work in accordance with the terms and conditions of the Contract.

f) The words "Contract Date" to mean the date on which this Agreement is effective.

g) The words "Contract Manager" to mean Miami-Dade County's Director, Department of Procurement Management, or the duly authorized representative designated to manage the Contract.

h) The word "Contractor" to mean Shanghai Zhenhua Heavy Industries Co., Ltd, and its permitted successors and assigns.

i) The word "Days" to mean Calendar Days.

j) The word "Deliverables" or "Submittals" to mean all documentation and any items of any nature submitted by the Contractor to the County's Port Engineer for review and approval pursuant to the terms of this Agreement.

k) The word "Department" to mean Miami-Dade County Seaport Department same as Port of Miami and Port.

l) The words "directed", "required", "permitted", "ordered", "designated", "selected", "prescribed" or words of like import to mean respectively, the direction, requirement, permission, order, designation, selection or prescription of the County's Port Engineer;

and similarly the words "approved", acceptable", "satisfactory", "equal", "necessary", or words of like import to mean respectively, approved by, or acceptable or satisfactory to, equal or necessary in the opinion of the County's Port Engineer.

m) The words "Extra Work" or "Change Order" or "Additional Work" resulting in additions or deletions or modifications to the amount, type or value of the Work and Services as required in this Contract, as directed and/or approved by the County.

n) The words "Force Account" to mean the basis of payment for extra work.

o) The word "Material" to mean all materials, parts and components incorporated in the Work, or used or consumed in the performance of the Work.

p) The words "Notice to Proceed", also "NTP" to mean the date the Contractor begins Work, which shall be identified in a letter issued by the Program Manager to the Contractor following the execution of this Agreement and the receipt by the County of all required insurance and bond certificates.

q) The word "Plans" to mean all officially approved Plans, or exact reproductions thereof, which show the location, character, dimensions, and details of the Work to be done and which are to be considered as a part of the Contract.

r) The words "Port Engineer" to mean the Assistant Director in charge of the Port's Capital Development Program who is the authorized County representative for the project.

s) The words "Project Manager" to mean the County Mayor or the duly authorized representative designated to manage the Project.

t) The words "Scope of Work" to mean the document appended hereto as Appendix A (which includes the scope, technical specification requirements, and associated drawings) and which details the work to be performed by the Contractor.

u) The word "Specifications", also "Technical Specifications" to mean all directions, provisions, and requirements contained herein or attached hereto, together with all written agreements made or to be made, setting out or relating to the method and manner of performing the Work or to the quantities and qualities of materials and labor to be furnished under the Contract.

v) The word "subcontractor" or "subconsultant" to mean any person, entity, firm or corporation, other than the employees of the Contractor, who furnishes labor and/or materials, in connection with the Work, whether directly or indirectly, on behalf and/or under the direction of the Contractor and whether or not in privity of Contract with the Contractor.

w) The words "Super-Post-Panamax" to mean dockside ship-to-shore container handling gantry crane with a minimum outreach to work a container ship stacking at least seventeen (17) containers across the beam.

x) The word "Surety" to mean the corporate bond company or individual which is bound by the Contract Bond(s) with and for the Contractor, who is primarily liable, and which engages to be responsible for the Contractor's acceptable performance of the Work of which Contract has been made and for the Contractor's payment of all debts pertaining thereto.

y) The words "Work", "Services" "Program", or "Project" to mean all matters and things

required to be done by the Contractor in accordance with the provisions of this Contract.

ARTICLE 2. ORDER OF PRECEDENCE

If there is a conflict between or among the provisions of this Agreement, the order of precedence is as follows: 1) these terms and conditions, 2) the Scope of Work (Appendix A), 3) the Miami-Dade County's RFP No. 750 and any associated addenda and attachments thereof, and 4) the Contractor's Proposal.

ARTICLE 3. RULES OF INTERPRETATION

a) References to a specified Article, section or schedule shall be construed as reference to that specified Article, or section of, or schedule to this Agreement unless otherwise indicated.

b) Reference to any agreement or other instrument shall be deemed to include such agreement or other instrument as such agreement or other instrument may, from time to time, be modified, amended, supplemented, or restated in accordance with its terms.

c) The terms "hereof", "herein", "hereinafter", "hereby", "herewith", "hereto", and "hereunder" shall be deemed to refer to this Agreement.

d) The titles, headings, captions and arrangements used in these Terms and Conditions are for convenience only and shall not be deemed to limit, amplify or modify the terms of this Contract, nor affect the meaning thereof.

ARTICLE 4. NATURE OF THE AGREEMENT

a) This Agreement incorporates and includes all prior negotiations, correspondence, conversations, agreements, and understandings applicable to the matters contained in this Agreement. The parties agree that there are no commitments, agreements, or understandings concerning the subject matter of this Agreement that are not contained in this Agreement, and that this Agreement contains the entire agreement between the parties as to all matters contained herein. Accordingly, it is agreed that no deviation from the terms hereof shall be predicated upon any prior representations or agreements, whether oral or written. It is further agreed that any oral representations or modifications concerning this Agreement shall be of no force or effect, and that this Agreement may be modified, altered or amended only by a written amendment duly executed by both parties hereto or their authorized representatives.

b) The Contractor shall provide the services set forth in the Scope of Work, and render full and prompt cooperation with the County in all aspects of the Services performed hereunder.

c) The Contractor acknowledges that this Agreement requires the performance of all things necessary for or incidental to the effective and complete performance of all Work and Services under this Contract. All things not expressly mentioned in this Agreement but necessary to carrying out its intent are required by this Agreement, and the Contractor shall perform the same as though they were specifically mentioned, described and delineated.

d) The Contractor shall furnish all labor, materials, tools, supplies, and other items required to perform the Work and Services that are necessary for the completion of this Contract. All Work and Services shall be accomplished at the direction of and to the satisfaction of the County's Port Engineer.

e) The Contractor acknowledges that the County shall be responsible for making all policy decisions regarding the Scope of Work. The Contractor agrees to provide input on

policy issues in the form of recommendations. The Contractor agrees to implement any and all changes in providing Services hereunder as a result of a policy change implemented by the County. The Contractor agrees to act in an expeditious and fiscally sound manner in providing the County with input regarding the time and cost to implement said changes and in executing the activities required to implement said changes.

ARTICLE 5. CONTRACT TERM

The Contract shall become effective on the date stated on Page 1 of these terms and conditions and shall continue until the County issues the Contractor the Final Acceptance Certificate. The County reserves the right to exercise its option to extend this Contract for up to one hundred-eighty (180) calendar days beyond the current Contract period and will notify the Contractor in writing of the extension. This Contract may be extended beyond the initial one hundred-eighty (180) calendar day extension period by mutual agreement between the County and the Contractor, upon approval by the Board of County Commissioners.

The Notice to Proceed date will be established during the Pre-work Conference which will be held in conjunction with or shortly after the final execution of the Contract and which will be attended in accordance with the Scope of Work by members of the Department, the Contractor and others affected by the Work. The Notice to Proceed date shall be set as a date not later than thirty (30) calendar days after the date of execution of the Contract, unless a later date acceptable to both parties is agreed upon.

ARTICLE 6. NOTICE REQUIREMENTS

All notices required or permitted under this Agreement shall be in writing and shall be deemed sufficiently served if delivered by Registered or Certified Mail, with return receipt requested; or delivered personally; or delivered via fax or e-mail (if provided below) and followed with delivery of hard copy; and in any case addressed as follows:

(1) To the County

a) to the Project Manager:

Miami-Dade County - Miami Dade Seaport Department
1015 North America Way – 2nd Floor
Miami, FL 33132
Attention: Director
Phone: 305-347-4844
Fax: 305-375-4726

and,

b) to the Contract Manager:

Miami-Dade County
Department of Procurement Management
111 N.W. 1st Street, Suite 1375
Miami, FL 33128-1974
Attention: Director
Phone: (305) 375-5548
Fax: (305) 375-2316

(2) To the Contractor

Shanghai Zhenhua Heavy Industries Co., Ltd
3470 Pu Dong Nan-Lu
Shanghai, P.R. China, 200125

Attention: Director Port Machinery
Phone: +86-21-58396666
Fax: +86-21-58395555

Either party may at any time designate a different address and/or contact person by giving notice as provided above to the other party. Such notices shall be deemed given upon receipt by the addressee.

ARTICLE 7. PAYMENT FOR SERVICES/AMOUNT OBLIGATED

The Contractor warrants that it has reviewed the County's requirements and has asked such questions and conducted such other inquiries as the Contractor deemed necessary in order to determine the price the Contractor will charge to provide the Work and Services to be performed under this Contract. The compensation for all Work and Services performed under this Contract, including all costs associated with such Work and Services, shall be as stated in Appendix B "Price Schedule". The County shall have no obligation to pay the Contractor any additional sum in excess of the amount stated therein, except for a change and/or modification to the Contract, which is approved and executed in writing by the County and the Contractor.

All Services undertaken by the Contractor before County's approval of this Contract shall be at the Contractor's risk and expense.

With respect to any travel costs and travel related expenses, the Contractor agrees to adhere to Section 112.061 of the Florida Statutes as they pertain to out-of-pocket expenses including employee lodging, transportation, per diem, and all miscellaneous cost-and fees. The County shall not be liable for any such expenses that have not been approved in advance, in writing, by the County.

ARTICLE 8. PRICING

Prices shall remain firm and fixed for the term of the Contract, including any option or extension periods; however, the Contractor may offer incentive discounts to the County at any time during the Contract term, including any renewal or extension thereof.

ARTICLE 9. BONDS/METHOD AND TIMES OF PAYMENT

Bond:

The Contractor shall duly execute and deliver to the County a Performance and Payment Bond in the amount of $37,800,000 at its own expense within thirty (30) days of the effective date of this Agreement. The Bond(s) shall be in the form as stated in Appendix C and shall remain in effect until the County issues the Contractor the Final Acceptance Certificate. The Bond(s) may be in the form of a Surety Bond written through a surety bond agency, rated as to Management and Strength as set forth below.

The following specifications shall apply to the bond required above:

A. All bonds shall be written through surety insurers authorized to do business in the State of Florida as surety, with the following qualifications as to management and financial strength according to the latest edition of Best's Insurance Guide, published by A.M. Best Company, Oldwick, New Jersey:

Bond Amount	Best Rating
500,001 to 1,500,000	B V
1,500,001 to 2,500,000	A VI
2,500,001 to 5,000,000	A VII
5,000,001 to 10,000,000	A VIII
Over 10,000,000	A IX

B. On contract amounts of $500,000 or less, the bond provisions of Section 287.0935, Florida Statutes (1985) shall be in effect and surety companies not otherwise qualifying with this paragraph may optionally qualify by:

1. Providing evidence that the surety has twice the minimum surplus and capital required by the Florida Insurance Code at the time the invitation to bid is issued;
2. Certifying that the surety is otherwise in compliance with the Florida Insurance Code; and
3. Providing a copy of the currently valid Certificate of Authority issued by the United States Department of the Treasury under ss. 31 U.S.C. 9304-9308.

Surety insurers shall be listed in the latest Circular 570 of the U.S. Department of the Treasury entitled "Acceptable Sureties on Federal Bonds", published annually. The bond amount shall not exceed the underwriting limitations as shown in this circular.

C. For contracts in excess of 500,000 the provisions of Section B will be adhered to plus the company must have been listed for at least three consecutive years, or holding a valid Certificate of Authority of at least 1.5 million dollars and on the Treasury List.

D. Surety Bonds guaranteed through U.S. Government Small Business Administration or Contractors Training and Development Inc. will also be acceptable.

E. In lieu of a Performance Bond, an irrevocable letter of credit or a cash bond in the form of a certified cashier's check made out to the Board of County Commissioners will be acceptable. All interest will accrue to Miami-Dade County during the life of this contract and as long as the funds are being held by Miami-Dade County.

F. The attorney-in-fact or other officer who signs a contract bond for a surety company must file with such bond a certified copy of power of attorney authorizing the officer to do so. The contract bond must be counter signed by the surety's resident Florida agent.

The Contractor may in lieu of a surety bond, submit a cash bond, conditioned upon the faithful performance of the Work in strict accordance with this Contract and with the Plans and Specifications and the completion of the same free from all liens and within the time limit herein specified; the said bond shall be so worded as to make the Contract a part thereof and shall contain a clause providing the right of suit or action for whose benefit said bond shall be executed as disclosed by the text of said bond and Contract to the same extent as if he or they were the obligee or obligee therein specifically mentioned, and all such persons shall be held or deemed to be obligee thereof.

Payment:
All monetary transactions shall only be performed in United States Dollars (USD) without exceptions.

Payment Milestones
The County will adhere to the following schedule for the payment of Cranes:

1. Fifteen percent (15%) of the Contract Price will be paid at Notice to Proceed.

2. Twenty percent (20%) of the Contract Price will be paid within thirty (30) days from the Port Engineer's acceptance of the Final Design Drawings prior to commencement of fabrication.

3. Forty percent (40%) of the Contract Price allocable to each crane will be paid upon loading and securing a fully erected, pre-commissioned and tested Crane in accordance with the Specifications, on the crane delivery vessel and the presentation of the shipping

documents associated therewith. If the loading and securing is beyond the latest shipping date shown on the approved Project Schedule, $15,000 USD (fifteen thousand United States Dollars) per crane times the number of days late will be deducted from the payment as a reserve against liquidated damages.

4. Fifteen percent (15%) of the Contract Price shall be paid upon successful completion of the Delivery, Re-Commissioning, Final Testing and Certification against the presentation of "Certificate of Acceptance for Substantial Completion" of each crane plus any deductions for reserve from the payment item No. 3 above and less $15,000 USD (fifteen thousand United States Dollars) per crane times the number of calendar days to the date of the "**Substantial Completion with Contract Work**" is beyond the Approved Project Schedule date.

5. The payment in item No. 4 above will be subject to a twenty (20) calendar days berth usage restriction for the delivery ship at the Port of Miami Lummus Island gantry berth for a delivery and unloading of four (4) Cranes on to the Delivery Site. The payment in item No. 4 above shall be reduced $15,000 USD (fifteen thousand United States Dollars) per crane times the number of calendar days beyond the twenty (20) calendar days berth usage restriction for delivery of four (4) Cranes, the Contractor occupies the gantry berth. The payment in item No. 4 above shall be reduced by the prevailing tariff times the number of calendar days, beyond the twenty (20) days indicated above; the Contractor's ship occupies the gantry berth.

   In any case, the Port reserves the right to re-assign the berth of the ship, keep the same berth, or order the delivery ship out to anchor.

6. Ten percent (10%), the remaining balance, of the contract price allocated to each Crane will be paid for each crane against the presentation of the "Certificate of Final Acceptance" thereof; however, not earlier than November 1, 2013.

If during the progress of the Work it appears that the Contractor's bills for materials and labor are not being paid, the County shall have the right to withhold from the Contractor's payment in sufficient sums to protect it against all losses from possible liens, and to apply the said sums to the payment of such debts. Payments are agreed not to be an admission by the County that the Work is done or that its quantity or quality is satisfactory; final acceptance shall occur only with final payment.

Before the final payment is made, the Contractor shall present to the County Finance Director satisfactory evidence that all liens, claims and demands of both the Contractor as well as its subcontractors employed in the construction of the Work are fully satisfied, and that the project is fully released from all such liens, claims, and demands. In the event the Contractor is unwilling to provide a release from all liens, claims and demands, thirty (30) days after the completion and acceptance of the Work will be the maximum period provided for the submittal of all claims. The County does not by this provision assume any responsibility or liability to any person other than the prime Contractor.

Should the Contractor fail to complete the work within the time limit, no partial estimate will be rendered and no payments will be made after the date established for completion except as follows:

a) If a Surety Bond was furnished, the Contractor shall deliver to the Port Engineer the written consent of the Contractor's Surety covering every such partial payment permitting such payment to be made without affecting the validity of the Bond.

b) If a Cash Bond was furnished, the Port Engineer will examine the conditions relating to the delay, also the amount and nature of the work remaining to be completed and his decision will determine whether partial payments will continue to be made or withheld. The validity of the Bond shall in no way be affected regardless of which course of action is taken.

c) Irrevocable Letter of Credit - The Contractor may substitute the Performance, Warranty, and/or Payment Bond(s) with an Irrevocable Letter of Credit. Letter(s) of Credit shall be in the form as approved by Miami-Dade County. Said LOCs shall be drawn on a financial institution, which is federally insured and authorized to do business in the State of Florida. Provisions of the LOCs shall not limit, in any way, any liability of the Contractor to Miami-Dade County in the performance of the Work.

The Contractor agrees that under the provisions of this Agreement, as reimbursement for Cranes and any optional items, the Contractor may bill the County upon invoices certified by the Contractor pursuant to Appendix B – Price Schedule and for Cranes with the Schedule stated above. All invoices shall be taken from the books of account kept by the Contractor, shall show the County's contract number, and shall have a unique invoice number assigned by the Contractor. It is the policy of Miami-Dade County that payment for all purchases by County agencies and the Public Health Trust shall be made in a timely manner and that interest payments be made on late payments. In accordance with Florida Statutes, Section 218.74 and Section 2-8.1.4 of the Miami-Dade County Code, the time at which payment shall be due from the County or the Public Health Trust shall be forty-five (45) days from receipt of a proper invoice. The time at which payment shall be due to small businesses shall be thirty (30) days from receipt of a proper invoice. All payments due from the County or the Public Health Trust, and not made within the time specified by this section shall bear interest from thirty (30) days after the due date at the rate of one percent (1%) per month on the unpaid balance. Further, proceedings to resolve disputes for payment of obligations shall be concluded by final written decision of the County Mayor, or his or her designee(s), not later that sixty (60) days after the date on which the proper invoice was received by the County or the Public Health Trust.

Invoices and associated back-up documentation shall be submitted in duplicate by the Contractor to the County as follows:

Miami-Dade County - Miami Dade Seaport Department
1015 North America Way – 2nd Floor
Miami, FL 33132
Attention: Port Engineer

The County may at any time designate a different address and/or contact person by giving written notice to the other party.

ARTICLE 10. INDEMNIFICATION AND INSURANCE

The Contractor shall indemnify and hold harmless the County and its officers, employees, agents and instrumentalities from any and all liability, losses or damages, including attorneys' fees and costs of defense, which the County or its officers, employees, agents or instrumentalities may incur as a result of claims, demands, suits, causes of actions or proceedings of any kind or nature arising out of, relating to or resulting from the performance of this Agreement by the Contractor or its employees, agents, servants, partners principals or subcontractors. The Contractor shall pay all claims and losses in connection therewith and shall investigate and defend all claims, suits or actions of any kind or nature in the name of the County, where applicable, including appellate proceedings, and shall pay all costs, judgments, and attorney's fees which may issue thereon. The Contractor expressly understands and agrees that any insurance protection required by this Agreement or otherwise provided by the Contractor shall in no way limit the responsibility to indemnify, keep and save harmless and

defend the County or its officers, employees, agents and instrumentalities as herein provided.

Upon County's notification, the Contractor shall furnish to the Department of Procurement Management, 111 N.W. 1st Street, Suite 2350, Miami, Florida 33128-1989, Certificates of Insurance which indicate that insurance coverage has been obtained which meets the requirements as outlined below:

a) **Worker's Compensation Insurance** for all employees of the Contractor as required by Florida Statute 440 and if applicable, US Longshoremen and Harbor Workers coverage.

b) **Comprehensive General Liability Insurance** including Products and Completed Operations coverage in an amount not less than $10,000,000 combined single limit for bodily injury and property damage. The Care, Custody and Control exclusion must be deleted. **Miami-Dade County must be shown as an additional insured with respect to this coverage. The mailing address of the Department of Procurement Management, as the certificate holder, must appear on the certificate of insurance.**

c) **Automobile Liability Insurance** covering all owned, non-owned, and hired vehicles used in connection with the Services, in an amount not less than $300,000 combined single limit per occurrence for bodily injury and property damage.

d) **Design Errors and Omissions Insurance** for the designer of the crane(s), whether the prime Contractor, a subcontractor, an affiliate company, an individual or others, in the amount of $10,000,000, exclusive of attorney's fees and costs.

e) **Transportation Insurance** on an "All Risk" basis for the full replacement cost of each crane covering any and all damages of loss to the crane(s) during transport, loading and unloading on to the gantry crane rails at the Port of Miami. The policy shall be in the name of the Contractor and Miami-Dade County A.T.I.M.A. The original policy shall be provided to Miami-Dade County.

f) **Builders Risk Insurance** (if crane(s) are to be erected or assembled on Port of Miami premises) on an "All Risk" basis for the full replacement cost of the crane(s). The policy shall be in the name of the Contractor and Miami-Dade County A.T.I.M.A. The original policy shall be provided to Miami-Dade County.

The Transfer of Risk for the cranes occurs at the time the County accepts the cranes substantially and places the crane(s) for revenue generating operation.

The insurance coverage required shall include those classifications, as listed in standard liability insurance manuals, which most nearly reflect the operation of the Contractor. All insurance policies required above shall be issued by companies authorized to do business under the laws of the State of Florida, or approved as surplus lines carriers, with the following qualifications:

The company must be rated no less than "A" as to management, and no less than "Class V" as to financial strength, according to the latest edition of Best's Insurance Guide published by A.M. Best Company, Oldwick, New Jersey, or its equivalent, subject to the approval of the County Risk Management Division.

OR

The company must hold a valid Florida Certificate of Authority as shown in the latest "List of All Insurance Companies Authorized or Approved to Do Business in Florida", issued by the State of Florida Department of Insurance and are members of the Florida Guaranty Fund.

Certificates of Insurance must indicate that for any cancellation of coverage before the expiration date, the issuing insurance carrier will endeavor to mail thirty (30) day written advance notice to the certificate holder. In addition, the Contractor hereby agrees not to modify the insurance coverage without thirty (30) days written advance notice to the County.

NOTE: MIAMI-DADE COUNTY CONTRACT NUMBER AND TITLE MUST APPEAR ON EACH CERTIFICATE OF INSURANCE.

Compliance with the foregoing requirements shall not relieve the Contractor of this liability and obligation under this section or under any other section in this Agreement.

Award of this Contract is contingent upon the receipt of the insurance documents, as required, within fifteen (15) calendar days after County notification to Contractor to comply before the award is made. If the insurance certificate is received within the specified time frame but not in the manner prescribed in this Agreement, the Contractor shall be verbally notified of such deficiency and shall have an additional five (5) calendar days to submit a corrected certificate to the County. If the Contractor fails to submit the required insurance documents in the manner prescribed in this Agreement within twenty (20) calendar days after County notification to comply, the Contractor shall be in default of the contractual terms and conditions and award of the Contract will be rescinded, unless such time frame for submission has been extended by the County.

The Contractor shall be responsible for assuring that the insurance certificates required in conjunction with this Section remain in force for the duration of the contractual period of the Contract, including any and all option years or extension periods that may be granted by the County. If insurance certificates are scheduled to expire during the contractual period, the Contractor shall be responsible for submitting new or renewed insurance certificates to the County at a minimum of thirty (30) calendar days in advance of such expiration. In the event that expired certificates are not replaced with new or renewed certificates which cover the contractual period, the County shall suspend the Contract until such time as the new or renewed certificates are received by the County in the manner prescribed herein; provided, however, that this suspended period does not exceed thirty (30) calendar days. Thereafter, the County may, at its sole discretion, terminate this contract.

ARTICLE 11. WORKMANSHIP, COMPONENTS AND MATERIALS

The Contractor shall provide the services of all workmen, mechanics, tradesmen and other employees trained and skilled in their various occupations; and all materials except such as may be specifically excluded in the drawings or Specifications; and shall construct completely ready for its intended purpose, the structure or parts thereof covered by the Contract, Plans and Specifications. These Plans and Specifications intend to provide for the structure or parts thereon under consideration to be fully completed and suitable in every feature for the purpose designed, and the Contractor shall supply all materials and work incidental to, or described or implied as incidental to, the construction included under this Contract, notwithstanding any omission in the drawings or specifications. Wherever not explicitly described, materials and workmanship of every kind shall be first class. The Contractor shall perform his work in proper sequence to the work with his Sub-contractors and the ongoing operations of the Port, and shall properly coordinate its work with existing and/or operations and new construction at the Port.

The County reserves the right to change the Plans and Specifications consistently with the general intention of the Contract for any part of the Work, materials and/or crane systems and components, either before or after fabrication has begun. Said changes shall be implemented with the intent to provide the Port with a crane that will be easily operated and maintainable. If

said changes have an impact on schedule of completion, the Port Engineer shall have the authority to negotiate and approve the required changes to the Contract. Notice of such changes shall be given in writing to the Contractor; such changes are not to be grounds for any claims by the Contractor for damages, nor for the forfeiture of the Contract.

ARTICLE 12. EMPLOYEES RESPONSIBILITY OF THE CONTRACTOR

All employees of the Contractor shall be considered to be, at all times, employees of the Contractor under its sole direction and not employees or agents of the County. The Contractor shall supply competent employees. Miami-Dade County may require the Contractor to remove an employee it deems careless, incompetent, insubordinate or otherwise objectionable and whose continued employment on County property is not in the best interest of the County. Each employee shall have and wear proper identification.

The Contractor is, and shall be, in the performance of all work services and activities under this Agreement, an independent contractor, and not an employee, agent or servant of the County. All persons engaged in any of the work or services performed pursuant to this Agreement shall at all times, and in all places, be subject to the Contractor's sole direction, supervision and control. The Contractor shall exercise control over the means and manner in which it and its employees perform the work, and in all respects the Contractor's relationship and the relationship of its employees to the County shall be that of an independent contractor and not as employees and agents of the County.

The Contractor does not have the power or authority to bind the County in any promise, agreement or representation other than specifically provided for in this Agreement.

ARTICLE 13. COMMENCEMENT AND DELAYS

After the Notice to Proceed is issued to the Contractor, the Contractor may begin Work. If the Contractor should be delayed in the progress of the Work included in this Agreement by unforeseeable causes beyond its control, the time for completion of the Work may be extended upon recommendation of the Port Engineer. Requests for extension of time must be submitted in writing to the Port Engineer within thirty (30) days from the beginning of such delay. Extensions of time cannot be authorized unless the written request is submitted in time as stated herein and to permit it to be acted upon before the Contract expiration date.

Such extension shall be granted only when the Port Engineer determines that the delay is beyond the control of the Contractor, and in this event the Contractor shall not be charged with liquidated damages or any excess cost when the delay in the completion of the work is due:

a. To any order duly issued by the County changing the Contractor's approved work schedule;

b. To unforeseeable cause beyond the control and without the fault or negligence of the Contractor, including, but not restricted to, acts of God, or of the public enemy, acts of the County, acts of another Contractor in the performance of a Contract with the County, fires, floods, epidemics, quarantine restrictions, strikes, freight embargoes and severe weather; and,

c. To any delays of subcontractors or suppliers occasioned by any of the cause specified in subparagraphs (a) and (b) above.

Provided further that the Contractor shall, within thirty (30) days from the beginning of such delay, notify the Port Engineer, in writing, of the causes of the delay, the Port Engineer shall ascertain the facts and extent of the delay and notify the Contractor within a reasonable time of his decision in the matter.

The Contractor shall assume all risks resulting from delays except that should the County, by act or omission, cause delays which result in actual loss to the Contractor, reimbursement thereof will be adjusted and allowed by the County only after being notified in writing by the Contractor at the time of the delay and after being given an opportunity to verify such money losses as they occur.

No payment or adjustment will be allowed the Contractor as reimbursement for any other delays whatsoever, regardless of by what or by whom caused, even though by other contractors on the same work, or by times, seasons, or weather; other than amounts provided in the Contract for payment which shall be understood to include and cover all risks due to delays except as stated in the foregoing.

If the Contractor fails to complete the work within the time limit, and if the County should nevertheless permit the Contractor to continue and complete the same without official extension of time in writing, such permission shall not modify nor waive any liability of the Contractor for damages arising from non-completion of work within the time limit, but all such liabilities shall be subject to continuation in full force against the Contractor.

ARTICLE 14. AUTHORITY OF THE COUNTY'S PORT ENGINEER

a) The Contractor hereby acknowledges that the County's Port Engineer will determine in the first instance all questions of any nature whatsoever arising out of, under, or in connection with, or in any way related to or on account of, this Agreement including without limitations: questions as to the value, acceptability and fitness of the Work; questions as to either party's fulfillment of its obligations under the Contract; negligence, fraud or misrepresentation before or subsequent to acceptance of the Contractor's Proposal; questions as to the interpretation of the Scope of Work; and claims for damages, compensation and losses.

b) The Contractor shall be bound by all determinations or orders and shall promptly obey and follow every order of the Port Engineer, including the withdrawal or modification of any previous order and regardless of whether the Contractor agrees with the Port Engineer's determination or order. Where orders are given orally, they will be issued in writing by the Port Engineer as soon thereafter as is practicable.

c) The Contractor must, in the final instance, seek to resolve every difference concerning the Agreement with the Port Engineer. In the event that the Contractor and the Port Engineer are unable to resolve their difference, the Contractor may initiate a dispute in accordance with the procedures set forth in this Article. Exhaustion of these procedures shall be a condition precedent to any lawsuit permitted hereunder.

d) In the event of such dispute, the parties to this Agreement authorize the County Mayor or designee, who may not be the Port Engineer or anyone associated with this Project, acting personally, to decide all questions arising out of, under, or in connection with, or in any way related to or on account of the Agreement (including but not limited to claims in the nature of breach of contract, fraud or misrepresentation arising either before or subsequent to execution hereof) and the decision of each with respect to matters within the County Mayor's purview as set forth above shall be conclusive, final and binding on parties. Any such dispute shall be brought, if at all, before the County Mayor within 10 days of the occurrence, event or act out of which the dispute arises.

e) The County Mayor may base this decision on such assistance as may be desirable, including advice of experts, but in any event shall base the decision on an independent and objective determination of whether Contractor's performance or any Deliverable meets the requirements of this Agreement and any specifications with respect thereto

set forth herein. The effect of any decision shall not be impaired or waived by any negotiations or settlements or offers made in connection with the dispute, whether or not the County Mayor participated therein, or by any prior decision of others, which prior decision shall be deemed subject to review, or by any termination or cancellation of the Agreement. All such disputes shall be submitted in writing by the Contractor to the County Mayor for a decision, together with all evidence and other pertinent information in regard to such questions, in order that a fair and impartial decision may be made. Whenever the County Mayor is entitled to exercise discretion or judgement or to make a determination or form an opinion pursuant to the provisions of this Article, such action shall be fair and impartial when exercised or taken. The County Mayor, as appropriate, shall render a decision in writing and deliver a copy of the same to the Contractor. Except as such remedies may be limited or waived elsewhere in the Agreement, Contractor reserves the right to pursue any remedies available under law after exhausting the provisions of this Article.

ARTICLE 15. FAILURE TO COMPLETE WORK ON TIME

The limit for the completion of all Work under this Contract shall be as set forth in the Appendix A, attached hereto. The dates fixing this period upon the calendar shall be as established and stated in the "Notice to Proceed" from the Port Engineer. After commencement of Work on the Contract, it shall be pushed with proper dispatch toward completion, to the satisfaction of the Port Engineer and shall be fully completed within the time limit. It is understood and agreed that the time limit for completion of said Work is the essence of the Contract and should the Contractor fail to complete the Work within the time limit, it is agreed that for each calendar day that any Work provided for in these Plans and Specifications shall remain incomplete after the time limit has expired, including any official extension of time limit, the sum per day given in the following schedule shall be deducted from monies due the Contractor, not as a penalty, but as liquidated damages and added expense for supervision.

Amount of Liquidated Damages and
Estimated Cost of Supervision per Crane per day

$15,000

The total amount of assessed Liquidated Damages for this Contract cannot exceed 10% of the total value of the Contract. Failure of the County to assess Liquidated Damages shall not be construed as a waiver of its ability to assess Liquidated Damages prior to the preparation of final payment.

The Contractor shall take into account all contingent work which has to be done by other parties, arising from any cause whatsoever, and shall not plead its want of knowledge of said contingent work as an excuse for delay in his work, or for its own performance.

ARTICLE 16. EXTRA WORK OR UNCLASSIFIED WORK

Quantities of Work or Materials in excess of those named in the Contractor's Proposal, and of the same kind, are not to be considered as extra work, and such excess when ordered by the Port Engineer, will be paid for at the rates stated in Appendix B. Aside from Work thus included in the schedule, no claims whatsoever for products and/or extra work will be considered or paid, except only when ordered in writing by the Port Engineer at the price stated in the order. The Port Engineer's authority to order excess work and Force Account Work is expressly limited to $180,000 Dollars Contingency Allowance for the four Cranes, plus an additional.

a. Notice and Service Thereof

All notices given by the County under the provisions of this Contract shall be in writing and services of same may be served in any of the following manners via:

i. By delivery of such notice to the Contractor as per Article 6 above.

ii. By mailing such notice by Certified mail to the address of the Contractor shown on the Contractor's Proposal.

iii. By providing a facsimile copy of the original document and soon after providing said original document to the Port Engineer.

b. Force Account Work

All extra work done on a "Force Account" basis shall be performed by such labor, tools and equipment as may be specified by the Port Engineer and will be paid for in the following manner:

i. For all labor in direct charge of the specified operations, the Contractor shall re-imburse as negotiated with the Port Engineer.

ii. For all components and materials used, the Contractor shall receive the actual cost of such materials, delivered at the site, as shown by original receipted bills, but no percentage shall be allowed on same.

iii. For any special equipment such as cranes, barges and manlifts, required for the economical performance of the work, the Port Engineer shall allow the Contractor a reasonable rental price as negotiate by existing County contracts for each and/or every hour, day or week (whichever is most cost effective) that said special equipment is in use on the work, to which sum no percentage shall be added.

The Compensation, as herein provided, shall be received by the Contractor as payment in full for extra work done on a "Force Account" basis.

The Contractor's representative and the County Representative shall prepare records of extra work done on a "Force Account" basis at the end of each day. Copies of these records shall be made in duplicate upon forms provided for this purpose by the Inspector and signed by both the County Representative and the Contractor's representative; one copy being forwarded, respectively, to the Port Engineer or his authorized representative and to the Contractor. All claims for extra work done on a "Force Account" basis shall be submitted, as hereinbefore provided, by the Contractor upon certified statement, to which shall be attached original receipted bills covering the cost of and the freight charges, and hauling on all materials used in such work, and said statements shall be submitted to the Port Engineer.

ARTICLE 17. SUBSTANTIAL COMPLETION

The County will issue a Certificate of acceptance for Substantial Completion for each individual crane (or all cranes) upon completion of contract work, County inspections, testing and certification of crane and its systems as specified herein to include but not limited to the Technical Specifications, transmittal of Punch List deficiencies has been formally provided to the Contractor and the Cranes are operational providing loading and unloading service to the Port's shipping clients.

ARTICLE 18. FINAL ACCEPTANCE

The County will issue a Certificate of Final Acceptance for each individual crane (or for all cranes) and/or line item awarded upon completion of all Punch List items and contractual requirements as specified herein to include but not limited to the Technical Specifications and to the satisfaction of the Port Engineer. All Punch List items and Contract requirements shall be resolved within thirty (30) days of Substantial Completion. Liquidated damages shall be imposed commencing on the thirty-first (31) day. If abnormal situations beyond the control of

the Contractor and events prevent the Contractor's compliance with the Contract, the County at its sole discretion shall have the authority to wave part or all of the Liquidated Damages cost.

ARTICLE 19. MUTUAL OBLIGATIONS

a) This Agreement, including attachments and appendixes to the Agreement, shall constitute the entire Agreement between the parties with respect hereto and supersedes all previous communications and representations or agreements, whether written or oral, with respect to the subject matter hereto unless acknowledged in writing by the duly authorized representatives of both parties.

b) Nothing in this Agreement shall be construed for the benefit, intended or otherwise, of any third party that is not a parent or subsidiary of a party or otherwise related (by virtue of ownership control or statutory control) to a party.

c) In those situations where this Agreement imposes an indemnity obligation on the Contractor, the County may, at its expense, elect to participate in the defense if the County should so choose. Furthermore, the County may at its own expense defend or settle any such claims if the Contractor fails to diligently defend such claims, and thereafter seek indemnity for costs from the Contractor.

ARTICLE 20. INTENTION AND CONTRACT DOCUMENTS

It is intended that this Agreement and the accompanying Appendices/Attachments which make up and constitute the Contract shall cover all aspects of the Work with explicit provisions, and it is understood that the Contractor has, by personal examination and inquiry if necessary, satisfied itself as to the local conditions and as to the meaning, requirements and reservations of the Specifications and Plans; for after the letting, no deviation will be allowed from the Engineer's interpretation of the Plans, Specifications and Contract. In case errors or omissions are discovered, they are to be corrected or supplied by the Contractor without extra cost to the County according to the apparent intention of the designing engineer. Work or materials strictly extra are hereinafter provided for in Article 16.

ARTICLE 21. LIABILITIES, DAMAGES AND ACCIDENTS

The Contractor shall store materials and shall be responsible for and shall maintain partly or wholly finished work during the continuance of the Contract and until the Final Acceptance of the Work. If any materials or part of the Work are lost, damaged, or destroyed by any cause or means whatsoever, the Contractor shall satisfactorily repair and replace the same at his own cost. The Contractor shall maintain suitable and sufficient guards and barriers, and at night, suitable and sufficient light for the prevention of accidents.

ARTICLE 22. HURRICANE OR DISASTER SERVICES

The Contractor recognizes and agrees that should a hurricane or other severe and catastrophic natural disaster affect the Miami-Dade County area during the delivery period of the Crane, the Contractor shall comply with all local, state and federal rules, orders and regulations with regards to work, operation and preparedness.

For emergency services and conditions not addressed by this Contract, the Contractor agrees to negotiate reasonable prices and terms with the County for any disaster-relief work required by the County. In all instances, the Contractor agrees to negotiate reasonable time extensions for performance of disaster-relief work.

ARTICLE 23. WARRANTY

Unless otherwise stipulated in the Specifications, the Contractor warrants that the Crane(s) and each component thereof will be free from all defects in design, materials, equipment, workmanship to include but not limited to corrosion, for a period of five (5) years from the Substantial Completion Date for structures, mechanisms and components that are

manufactured by the Contractor. The warranty period for the electrical equipment supplied by the Drive Manufacturer will be for two (2) years from the Substantial Completion Date. The warranty period for all other purchased parts will be the standard period provided by the part supplier. The applicable warranty period for any replacement occurring during the warranty period will last until the later of (i) one (1) year after such replacement occurs or (ii) the remaining unused warranty period.

In the event that any part of the Crane(s) or its components appears to be defective in design, manufacture, materials, equipment, fabrication, or workmanship within the period of warranty, the County will immediately notify the Contractor in writing of the alleged defect or failure. The Contractor will thereupon promptly correct any defect or failure without cost to the County, or will authorize the County to make, for the Contractor's account, such repairs or replacements as may be necessary to correct the defect or failure. No allowance will be made for any repairs or replacements made by the County, or others, unless and until the County has given the Contractor notice of the alleged defect or failure prior to the commencement of such repairs or replacements. However, if the defect is such as to interfere with the County's operation and use of the Crane(s), the County may, after notification, proceed forthwith to repair the same at the expense of the Contractor.

The County may negotiate and enter into with the Contractor a yearly inspection or compliance service agreement which will reflect Contractor's continuing interest in proper maintenance and overhaul of the Crane(s).

ARTICLE 24. AUDITS

The Contractor shall maintain, and shall require that its subcontractors and suppliers maintain, complete and accurate records to substantiate compliance with the requirements set forth in the Scope of Work. The Contractor and its subcontractors and suppliers, shall retain such records, and all other documents relevant to the Services furnished under this Agreement for a period of three (3) years from the expiration date of this Agreement and any extension thereof.

The County, or its duly authorized representatives or governmental agencies shall, until the expiration of three (3) years after the expiration of this Agreement and any extension thereof, have access to and the right to examine and reproduce any of the Contractor's books, documents, papers and records and of its subcontractors and suppliers which apply to all matters of the County. Such records shall subsequently conform to Generally Accepted Accounting Principles requirements, as applicable, and shall only address those transactions related to this Agreement.

Pursuant to County Ordinance No. 03-2, the Contractor will grant access to the Commission Auditor to all financial and performance related records, property, and equipment purchased in whole or in part with government funds. The Contractor agrees to maintain an accounting system that provides accounting records that are supported with adequate documentation, and adequate procedures for determining the allowability and allocability of costs.

ARTICLE 25. SUBSTITUTION OF PERSONNEL

In the event the Contractor wishes to substitute personnel for the key personnel identified by the Contractor's Proposal, the Contractor must notify the County in writing and request written approval for the substitution at least ten (10) business days prior to effecting such substitution.

ARTICLE 26. CONSENT OF THE COUNTY REQUIRED FOR ASSIGNMENT

The Contractor shall not assign, transfer, convey or otherwise dispose of this Agreement, including its rights, title or interest in or to the same or any part thereof without the prior written consent of the County.

ARTICLE 27. SUBCONTRACTUAL RELATIONS

a) If the Contractor will cause any part of this Agreement to be performed by a Subcontractor, the provisions of this Contract will apply to such Subcontractor and its officers, agents and employees in all respects as if it and they were employees of the Contractor; and the Contractor will not be in any manner thereby discharged from its obligations and liabilities hereunder, but will be liable hereunder for all acts and negligence of the Subcontractor, its officers, agents, and employees, as if they were employees of the Contractor. The services performed by the Subcontractor will be subject to the provisions hereof as if performed directly by the Contractor.

b) The Contractor, before making any subcontract for any portion of the services, will state in writing to the County the name of the proposed Subcontractor, the portion of the Services which the Subcontractor is to do, the place of business of such Subcontractor, and such other information as the County may require. The County will have the right to require the Contractor not to award any subcontract to a person, firm or corporation disapproved by the County.

c) Before entering into any subcontract hereunder, the Contractor will inform the Subcontractor fully and completely of all provisions and requirements of this Agreement relating either directly or indirectly to the Services to be performed. Such Services performed by such Subcontractor will strictly comply with the requirements of this Contract.

d) In order to qualify as a Subcontractor satisfactory to the County, in addition to the other requirements herein provided, the Subcontractor must be prepared to prove to the satisfaction of the County that it has the necessary facilities, skill and experience, and ample financial resources to perform the Services in a satisfactory manner. To be considered skilled and experienced, the Subcontractor must show to the satisfaction of the County that it has satisfactorily performed services of the same general type which is required to be performed under this Agreement.

e) The County shall have the right to withdraw its consent to a subcontract if it appears to the County that the subcontract will delay, prevent, or otherwise impair the performance of the Contractor's obligations under this Agreement. All Subcontractors are required to protect the confidentiality of the County's and County's proprietary and confidential information. Contractor shall furnish to the County copies of all subcontracts between Contractor and Subcontractors and suppliers hereunder. Within each such subcontract, there shall be a clause for the benefit of the County permitting the County to request completion of performance by the Subcontractor of its obligations under the subcontract, in the event the County finds the Contractor in breach of its obligations, the option to pay the Subcontractor directly for the performance by such subcontractor. Notwithstanding, the foregoing shall neither convey nor imply any obligation or liability on the part of the County to any subcontractor hereunder as more fully described herein.

ARTICLE 28. ASSUMPTION, PARAMETERS, PROJECTIONS, ESTIMATES AND EXPLANATIONS

The Contractor understands and agrees that any assumptions, parameters, projections, estimates and explanations presented by the County were provided to the Contractor for evaluation purposes only. However, since these assumptions, parameters, projections, estimates, and explanations represent predictions of future events the County makes no representations or guarantees; and the County shall not be responsible for the accuracy of the assumptions presented; and the County shall not be responsible for conclusions to be drawn therefrom; and any assumptions, parameters, projections, estimates and explanations shall not form the basis of any claim by the Contractor. The Contractor accepts all risk associated with using this information.

ARTICLE 29. SEVERABILITY
If this Agreement contains any provision found to be unlawful, the same shall be deemed to be of no effect and shall be deemed stricken from this Agreement without affecting the binding force of this Agreement as it shall remain after omitting such provision.

ARTICLE 30. TERMINATION AND SUSPENSION OF WORK

a) The County may terminate this Agreement if an individual or corporation or other entity attempts to meet its contractual obligation with the County through fraud, misrepresentation or material misstatement.

b) The County may, as a further sanction, terminate or cancel any other contract(s) that such individual or corporation or other entity has with the County and that such individual, corporation or other entity shall be responsible for all direct and indirect costs associated with such termination or cancellation, including attorney's fees.

c) The foregoing notwithstanding, any individual, corporation or other entity which attempts to meet its contractual obligations with the County through fraud, misrepresentation or material misstatement may be debarred from County contracting for up to five (5) years in accordance with the County debarment procedures. The Contractor may be subject to debarment for failure to perform and all other reasons set forth in Section 10-38 of the County Code.

In addition to cancellation or termination as otherwise provided in this Agreement, the County may at any time, in its sole discretion, with or without cause, terminate this Agreement by written notice to the Contractor and in such event:

d) The Contractor shall, upon receipt of such notice, unless otherwise directed by the County:

i. stop work on the date specified in the notice ("the Effective Termination Date");

ii. take such action as may be necessary for the protection and preservation of the County's materials and property;

iii. cancel orders;

iv. assign to the County and deliver to any location designated by the County any noncancelable orders for Deliverables that are not capable of use except in the performance of this Agreement and has been specifically developed for the sole purpose of this Agreement and not incorporated in the Services;

v. take no action which will increase the amounts payable by the County under this Agreement; and

e) In the event that the County exercises its right to terminate this Agreement pursuant to this Article the Contractor will be compensated as stated in the payment Articles, herein, for the:

i. portion of the Services completed in accordance with the Agreement up to the Effective Termination Date; and

ii. noncancelable Deliverables that are not capable of use except in the performance of this Agreement and has been specifically developed for the sole purpose of this

Agreement but not incorporated in the Services.

f) All compensation pursuant to this Article are subject to audit.

ARTICLE 31. EVENT OF DEFAULT

a) An Event of Default shall mean a breach of this Agreement by the Contractor. Without limiting the generality of the foregoing and in addition to those instances referred to herein as a breach, an Event of Default, shall include the following:

i. the Contractor has not delivered Deliverables on a timely basis.

ii. the Contractor has refused or failed, except in case for which an extension of time is provided, to supply enough properly skilled Staff Personnel;

iii. the Contractor has failed to make prompt payment to subcontractors or suppliers for any Services;

iv. the Contractor has become insolvent (other than as interdicted by the bankruptcy laws), or has assigned the proceeds received for the benefit of the Contractor's creditors, or the Contractor has taken advantage of any insolvency statute or debtor/creditor law or if the Contractor's affairs have been put in the hands of a receiver;

v. the Contractor has failed to obtain the approval of the County where required by this Agreement;

vi. the Contractor has failed to provide "adequate assurances" as required under subsection "b" below;

vii. the Contractor has failed in the representation of any warranties stated herein.

b) When, in the opinion of the County, reasonable grounds for uncertainty exist with respect to the Contractor's ability to perform the Services or any portion thereof, the County may request that the Contractor, within the timeframe set forth in the County's request, provide adequate assurances to the County, in writing, of the Contractor's ability to perform in accordance with terms of this Agreement. Until the County receives such assurances the County may request an adjustment to the compensation received by the Contractor for portions of the Services which the Contractor has not performed. In the event that the Contractor fails to provide to the County the requested assurances within the prescribed time frame, the County may:

i. treat such failure as a repudiation of this Agreement;

ii. resort to any remedy for breach provided herein or at law, including but not limited to, taking over the performance of the Services or any part thereof either by itself or through others.

c) In the event the County shall terminate this Agreement for default, the County or its designated representatives, may immediately take possession of all applicable equipment, materials, products, documentation, reports and data.

ARTICLE 32. NOTICE OF DEFAULT - OPPORTUNITY TO CURE

If an Event of Default occurs, in the determination of the County, the County may so notify the Contractor ("Default Notice"), specifying the basis for such default, and advising the Contractor that such default must be cured immediately or this Agreement with the County may be

terminated. Notwithstanding, the County may, in its sole discretion, allow the Contractor to rectify the default to the County's reasonable satisfaction within a thirty (30) day period. The County may grant an additional period of such duration as the County shall deem appropriate without waiver of any of the County's rights hereunder, so long as the Contractor has commenced curing such default and is effectuating a cure with diligence and continuity during such thirty (30) day period or any other period which the County prescribes. The default notice shall specify the date the Contractor shall discontinue the Services upon the Termination Date.

ARTICLE 33. REMEDIES IN THE EVENT OF DEFAULT

If an Event of Default occurs, the Contractor shall be liable for all damages resulting from the default, including but not limited to:

a) lost revenues;

b) the difference between the cost associated with procuring Services hereunder and the amount actually expended by the County for reprocurement of Services, including procurement and administrative costs; and,

c) such other direct damages.

The Contractor shall also remain liable for any liabilities and claims related to the Contractor's default. The County may also bring any suit or proceeding for specific performance or for an injunction.

ARTICLE 34. PATENT AND COPYRIGHT INDEMNIFICATION

a) The Contractor warrants that all Deliverables furnished hereunder, including but not limited to: equipment programs, documentation, software, analyses, applications, methods, ways, processes, and the like, do not infringe upon or violate any patent, copyrights, service marks, trade secret, or any other third party proprietary rights.

b) The Contractor shall be liable and responsible for any and all claims made against the County for infringement of patents, copyrights, service marks, trade secrets or any other third party proprietary rights, by the use or supplying of any programs, documentation, software, analyses, applications, methods, ways, processes, and the like, in the course of performance or completion of, or in any way connected with, the Work, or the County's continued use of the Deliverables furnished hereunder. Accordingly, the Contractor at its own expense, including the payment of attorney's fees, shall indemnify, and hold harmless the County and defend any action brought against the County with respect to any claim, demand, cause of action, debt, or liability.

c) In the event any Deliverable or anything provided to the County hereunder, or portion thereof is held to constitute an infringement and its use is or may be enjoined, the Contractor shall have the obligation to, at the County's option to (i) modify, or require that the applicable subcontractor or supplier modify, the alleged infringing item(s) at its own expense, without impairing in any respect the functionality or performance of the item(s), or (ii) procure for the County, at the Contractor's expense, the rights provided under this Agreement to use the item(s).

d) The Contractor shall be solely responsible for determining and informing the County whether a prospective supplier or subcontractor is a party to any litigation involving patent or copyright infringement, service mark, trademark, violation, or proprietary rights claims or is subject to any injunction which may prohibit it from providing any Deliverable hereunder. The Contractor shall enter into agreements with all suppliers and subcontractors at the Contractor's own risk. The County may reject any Deliverable that

it believes to be the subject of any such litigation or injunction, or if, in the County's judgment, use thereof would delay the Work or be unlawful.

e) The Contractor shall not infringe any copyright, trademark, service mark, trade secrets, patent rights, or other intellectual property rights in the performance of the Work.

ARTICLE 35. CONFIDENTIALITY

a) All Developed Works and other materials, data, transactions of all forms, financial information, documentation, inventions, designs and methods obtained from the County in connection with the Services performed under this Agreement, made or developed by the Contractor or its subcontractors in the course of the performance of such Services, or the results of such Services, or which the County holds the proprietary rights, constitute Confidential Information and may not, without the prior written consent of the County, be used by the Contractor or its employees, agents, subcontractors or suppliers for any purpose other than for the benefit of the County, unless required by law. In addition to the foregoing, all County employee information and County financial information shall be considered confidential information and shall be subject to all the requirements stated herein. Neither the Contractor nor its employees, agents, subcontractors or suppliers may sell, transfer, publish, disclose, display, license or otherwise make available to others any part of such Confidential Information without the prior written consent of the County. Additionally, the Contractor expressly agrees to be bound by and to defend, indemnify and hold harmless the County, and their officers and employees from the breach of any federal, state or local law in regard to the privacy of individuals.

b) The Contractor shall advise each of its employees, agents, subcontractors and suppliers who may be exposed to such Confidential Information of their obligation to keep such information confidential and shall promptly advise the County in writing if it learns of any unauthorized use or disclosure of the Confidential Information by any of its employees or agents, or subcontractor's or supplier's employees, present or former. In addition, the Contractor agrees to cooperate fully and provide any assistance necessary to ensure the confidentiality of the Confidential Information.

c) It is understood and agreed that in the event of a breach of this Article damages may not be an adequate remedy and the County shall be entitled to injunctive relief to restrain any such breach or threatened breach. Unless otherwise requested by the County, upon the completion of the Services performed hereunder, the Contractor shall immediately turn over to the County all such Confidential Information existing in tangible form, and no copies thereof shall be retained by the Contractor or its employees, agents, subcontractors or suppliers without the prior written consent of the County. A certificate evidencing compliance with this provision and signed by an officer of the Contractor shall accompany such materials.

ARTICLE 36. PROPRIETARY INFORMATION

As a political subdivision of the State of Florida, Miami-Dade County is subject to the stipulations of Florida's Public Records Law.

The Contractor acknowledges that all computer software in the County's possession may constitute or contain information or materials which the County has agreed to protect as proprietary information from disclosure or unauthorized use and may also constitute or contain information or materials which the County has developed at its own expense, the disclosure of which could harm the County's proprietary interest therein.

During the term of the contract, the Contractor will not use directly or indirectly for itself or for others, or publish or disclose to any third party, or remove from the County's property, any computer programs, data compilations, or other software which the County has developed, has used or is using, is holding for use, or which are otherwise in the possession of the County (hereinafter "Computer Software"). All third-party license agreements must also be honored by the contractors and their employees, except as authorized by the County and, if the Computer Software has been leased or purchased by the County, all hired party license agreements must also be honored by the contractors' employees with the approval of the lessor or Contractors thereof. This includes mainframe, minis, telecommunications, personal computers and any and all information technology software.

The Contractor will report to the County any information discovered or which is disclosed to the Contractor which may relate to the improper use, publication, disclosure or removal from the County's property of any information technology software and hardware and will take such steps as are within the Contractor's authority to prevent improper use, disclosure or removal.

ARTICLE 37. PROPRIETARY RIGHTS

a) The Contractor hereby acknowledges and agrees that the County retains all rights, title and interests in and to all materials, data, documentation and copies thereof furnished by the County to the Contractor hereunder or furnished by the Contractor to the County and/or created by the Contractor for delivery to the County, even if unfinished or in process, as a result of the Services the Contractor performs in connection with this Agreement, including all copyright and other proprietary rights therein, which the Contractor as well as its employees, agents, subcontractors and suppliers may use only in connection of the performance of Services under this Agreement. The Contractor shall not, without the prior written consent of the County, use such documentation on any other project in which the Contractor or its employees, agents, subcontractors or suppliers are or may become engaged. Submission or distribution by the Contractor to meet official regulatory requirements or for other purposes in connection with the performance of Services under this Agreement shall not be construed as publication in derogation of the County's copyrights or other proprietary rights.

b) All rights, title and interest in and to certain inventions, ideas, designs and methods, specifications and other documentation related thereto developed by the Contractor and its subcontractors specifically for the County, hereinafter referred to as "Developed Works" shall become the property of the County.

c) Accordingly, neither the Contractor nor its employees, agents, subcontractors or suppliers shall have any proprietary interest in such Developed Works. The Developed Works may not be utilized, reproduced or distributed by or on behalf of the Contractor, or any employee, agent, subcontractor or supplier thereof, without the prior written consent of the County, except as required for the Contractor's performance hereunder.

d) Except as otherwise provided in subsections a, b, and c above, or elsewhere herein, the Contractor and its subcontractors and suppliers hereunder shall retain all proprietary rights in and to all Licensed Software provided hereunder, that have not been customized to satisfy the performance criteria set forth in the Scope of Work. Notwithstanding the foregoing, the Contractor hereby grants, and shall require that its subcontractors and suppliers grant, if the County so desires, a perpetual, irrevocable and unrestricted right and license to use, duplicate, disclose and/or permit any other person(s) or entity(ies) to use all such Licensed Software and the associated specifications, technical data and other Documentation for the operations of the County or entities controlling, controlled by, under common control with, or affiliated with the

County, or organizations which may hereafter be formed by or become affiliated with the County. Such license specifically includes, but is not limited to, the right of the County to use and/or disclose, in whole or in part, the technical documentation and Licensed Software, including source code provided hereunder, to any person or entity outside the County for such person's or entity's use in furnishing any and/or all of the Deliverables provided hereunder exclusively for the County or entities controlling, controlled by, under common control with, or affiliated with the County, or organizations which may hereafter be formed by or become affiliated with the County. No such License Software, specifications, data, documentation or related information shall be deemed to have been given in confidence and any statement or legend to the contrary shall be void and of no effect.

ARTICLE 38. VENDOR REGISTRATION AND FORMS/CONFLICT OF INTEREST

a) Vendor Registration

The Contractor shall be a registered vendor with the County – Department of Procurement Management, for the duration of this Agreement. In becoming a Registered Vendor with Miami-Dade County, the Contractor confirms its knowledge of and commitment to comply with the following:

1. ***Miami-Dade County Ownership Disclosure Affidavit***
(Section 2-8.1 of the County Code)

2. ***Miami-Dade County Employment Disclosure Affidavit***
(Section 2.8-1(d)(2) of the County Code)

3. ***Miami-Dade Employment Drug-free Workplace Certification***
(Section 2-8.1.2(b) of the County Code)

4. ***Miami-Dade Disability and Nondiscrimination Affidavit***
(Section 2-8.1.5 of the County Code)

5. ***Miami-Dade County Debarment Disclosure Affidavit***
(Section 10.38 of the County Code)

6. ***Miami-Dade County Vendor Obligation to County Affidavit***
(Section 2-8.1 of the County Code)

7. ***Miami-Dade County Code of Business Ethics Affidavit***
(Section 2-8.1(i) and 2-11(b)(1) of the County Code through (6) and (9) of the County Code and Section 2-11.1(c) of the County Code)

8. ***Miami-Dade County Family Leave Affidavit***
(Article V of Chapter 11 of the County Code)

9. ***Miami-Dade County Living Wage Affidavit***
(Section 2-8.9 of the County Code)

10. ***Miami-Dade County Domestic Leave and Reporting Affidavit***
(Article 8, Section 11A-60 11A-67 of the County Code)

11. ***Subcontracting Practices***
(Ordinance 97-35)

12. ***Subcontractor /Supplier Listing***
(Section 2-8.8 of the County Code)

13. ***Environmentally Acceptable Packaging***
(Resolution R-738-92)

14. ***W-9 and 8109 Forms***
(as required by the Internal Revenue Service)

15. ***FEIN Number or Social Security Number***
In order to establish a file, the Contractor's Federal Employer Identification Number (FEIN) must be provided. If no FEIN exists, the Social Security Number of the owner or individual must be provided. This number becomes Contractor's "County Vendor Number". To comply with Section 119.071(5) of the Florida Statutes relating to the collection of an individual's Social Security Number, be aware that the County requests the Social Security Number for the following purposes:
    - Identification of individual account records
    - To make payments to individual/Contractor for goods and services provided to Miami-Dade County
    - Tax reporting purposes
    - To provide a unique identifier in the vendor database that may be used for searching and sorting departmental records

16. ***Office of the Inspector General***
(Section 2-1076 of the County Code)

17. ***Small Business Enterprises***
The County endeavors to obtain the participation of all small business enterprises pursuant to Sections 2-8.2, 2-8.2.3 and 2-8.2.4 of the County Code and Title 49 of the Code of Federal Regulations.

18. ***Antitrust Laws***
By acceptance of any contract, the Contractor agrees to comply with all antitrust laws of the United States and the State of Florida.

b) Conflict of Interest

Section 2-11.1(d) of Miami-Dade County Code requires that any County employee or any member of the employee's immediate family who has a controlling financial interest, direct or

indirect, with Miami-Dade County or any person or agency acting for Miami-Dade County, competing or applying for a contract, must first request a conflict of interest opinion from the County's Ethic Commission prior to their or their immediate family member's entering into any contract or transacting any business through a firm, corporation, partnership or business entity in which the employee or any member of the employee's immediate family has a controlling financial interest, direct or indirect, with Miami-Dade County or any person or agency acting for Miami-Dade County. Any such contract or business engagement entered in violation of this subsection, as amended, shall be rendered voidable. For additional information, please contact the Ethics Commission hotline at (305) 579-2593.

ARTICLE 39. INSPECTOR GENERAL REVIEWS

Independent Private Sector Inspector General Reviews

Pursuant to Miami-Dade County Administrative Order 3-20, the County has the right to retain the services of an Independent Private Sector Inspector General (hereinafter "IPSIG"), whenever the County deems it appropriate to do so. Upon written notice from the County, the Contractor shall make available to the IPSIG retained by the County, all requested records and documentation pertaining to this Agreement for inspection and reproduction. The County shall be responsible for the payment of these IPSIG services, and under no circumstance shall the Contractor's prices and any changes thereto approved by the County, be inclusive of any charges relating to these IPSIG services. The terms of this provision herein, apply to the Contractor, its officers, agents, employees, subcontractors and assignees. Nothing contained in this provision shall impair any independent right of the County to conduct an audit or investigate the operations, activities and performance of the Contractor in connection with this Agreement. The terms of this Article shall not impose any liability on the County by the Contractor or any third party.

Miami-Dade County Inspector General Review

According to Section 2-1076 of the Code of Miami-Dade County, as amended by Ordinance No. 99-63, Miami-Dade County has established the Office of the Inspector General which may, on a random basis, perform audits on all County contracts, throughout the duration of said contracts, except as otherwise provided below. The cost of the audit for this Contract shall be one quarter (1/4) of one (1) percent of the total contract amount which cost shall be included in the total contract amount. The audit cost will be deducted by the County from progress payments to the Contractor. The audit cost shall also be included in all change orders and all contract renewals and extensions.

Exception: The above application of one quarter (1/4) of one percent fee assessment shall not apply to the following contracts: (a) IPSIG contracts; (b) contracts for legal services; (c) contracts for financial advisory services; (d) auditing contracts; (e) facility rentals and lease agreements; (f) concessions and other rental agreements; (g) insurance contracts; (h) revenue-generating contracts; (I) contracts where an IPSIG is assigned at the time the contract is approved by the Commission; (j) professional service agreements under $1,000; (k) management agreements; (l) small purchase orders as defined in Miami-Dade County Administrative Order 3-2; (m) federal, state and local government-funded grants; and (n) interlocal agreements. ***Notwithstanding the foregoing, the Miami-Dade County Board of County Commissioners may authorize the inclusion of the fee assessment of one quarter (1/4) of one percent in any exempted contract at the time of award.***

Nothing contained above shall in any way limit the powers of the Inspector General to perform audits on all County contracts including, but not limited to, those contracts specifically exempted above. The Miami-Dade County Inspector General is authorized and empowered to review past, present and proposed County and Public Health Trust contracts, transactions, accounts, records and programs. In addition, the Inspector General has the power to subpoena witnesses, administer oaths, require the production of records and monitor existing projects and programs. Monitoring of an existing project or program may include a report concerning

whether the project is on time, within budget and in conformance with plans, specifications and applicable law. The Inspector General is empowered to analyze the necessity of and reasonableness of proposed change orders to the Contract. The Inspector General is empowered to retain the services of independent private sector inspectors general (IPSIG) to audit, investigate, monitor, oversee, inspect and review operations, activities, performance and procurement process, including but not limited to project design, specifications, proposal submittals, activities of the Contractor, its officers, agents and employees, lobbyists, County staff and elected officials to ensure compliance with contract specifications and to detect fraud and corruption.

Upon written notice to the Contractor from the Inspector General or IPSIG retained by the Inspector General, the Contractor shall make all requested records and documents available to the Inspector General or IPSIG for inspection and copying. The Inspector General and IPSIG shall have the right to inspect and copy all documents and records in the Contractor's possession, custody or control which, in the Inspector General's or IPSIG's sole judgment, pertain to performance of the contract, including, but not limited to original estimate files, change order estimate files, worksheets, proposals and agreements form and which successful and unsuccessful subcontractors and suppliers, all project-related correspondence, memoranda, instructions, financial documents, construction documents, proposal and contract documents, back-charge documents, all documents and records which involve cash, trade or volume discounts, insurance proceeds, rebates, or dividends received, payroll and personnel records, and supporting documentation for the aforesaid documents and records.

ARTICLE 40. LOCAL, STATE, AND FEDERAL COMPLIANCE REQUIREMENTS

Contractor agrees to comply, subject to applicable professional standards, with the provisions of any and all applicable Federal, State and the County orders, statutes, ordinances, rules and regulations which may pertain to the Services required under this Agreement, including but not limited to:

a) Equal Employment Opportunity (EEO), in compliance with Executive Order 11246 as amended and applicable to this Contract.

b) Miami-Dade County Florida, Department of Small Business Development Participation Provisions, as applicable to this Contract.

c) Environmental Protection Agency (EPA), as applicable to this Contract.

d) Miami-Dade County Code, Chapter 11A, Article 3. All contractors and subcontractors performing work in connection with this Contract shall provide equal opportunity for employment because of race, religion, color, age, sex, national origin, sexual preference, disability or marital status. The aforesaid provision shall include, but not be limited to, the following: employment, upgrading, demotion or transfer, recruitment advertising; layoff or termination; rates of pay or other forms of compensation; and selection for training, including apprenticeship. The Contractor agrees to post in conspicuous place available for employees and applicants for employment, such notices as may be required by the Dade County Fair Housing and Employment Commission, or other authority having jurisdiction over the work setting forth the provisions of the nondiscrimination law.

e) "Conflicts of Interest" Section 2-11 of the County Code, and Ordinance 01-199.

f) Miami-Dade County Code Section 10-38 "Debarment".

g) Miami-Dade County Ordinance 99-5, codified at 11A-60 et. seq. of Miami-Dade Code pertaining to complying with the County's Domestic Leave Ordinance.

h) Miami-Dade County Ordinance 99-152, prohibiting the presentation, maintenance, or prosecution of false or fraudulent claims against Miami-Dade County.

Notwithstanding any other provision of this Agreement, Contractor shall not be required pursuant to this Agreement to take any action or abstain from taking any action if such action or abstention would, in the good faith determination of the Contractor, constitute a violation of any law or regulation to which Contractor is subject, including but not limited to laws and regulations requiring that Contractor conduct its operations in a safe and sound manner.

ARTICLE 41. NONDISCRIMINATION

During the performance of this Contract, Contractor agrees to not discriminate against any employee or applicant for employment because of race, religion, color, sex, handicap, marital status, age or national origin, and will take affirmative action to ensure that they are afforded equal employment opportunities without discrimination. Such action shall be taken with reference to, but not limited to: recruitment, employment, termination, rates of pay or other forms of compensation, and selection for training or retraining, including apprenticeship and on the job training.

By entering into this Contract, the Contractor attests that it is not in violation of the Americans with Disabilities Act of 1990 (and related Acts) or Miami-Dade County Resolution No. R-385-95. If the Contractor or any owner, subsidiary or other firm affiliated with or related to the Contractor is found by the responsible enforcement agency or the County to be in violation of the Act or the Resolution, such violation shall render this Contract void. This Contract shall be void if the Contractor submits a false affidavit pursuant to this Resolution or the Contractor violates the Act or the Resolution during the term of this Contract, even if the Contractor was not in violation at the time it submitted its affidavit.

ARTICLE 42. CONFLICT OF INTEREST

The Contractor represents that:

a) No officer, director, employee, agent, or other consultant of the County or a member of the immediate family or household of the aforesaid has directly or indirectly received or been promised any form of benefit, payment or compensation, whether tangible or intangible, in connection with the grant of this Agreement.

b) There are no undisclosed persons or entities interested with the Contractor in this Agreement. This Agreement is entered into by the Contractor without any connection with any other entity or person making a proposal for the same purpose, and without collusion, fraud or conflict of interest. No elected or appointed officer or official, director, employee, agent or other consultant of the County, or of the State of Florida (including elected and appointed members of the legislative and executive branches of government), or a member of the immediate family or household of any of the aforesaid:

   i) is interested on behalf of or through the Contractor directly or indirectly in any manner whatsoever in the execution or the performance of this Agreement, or in the services, supplies or work, to which this Agreement relates or in any portion of the revenues; or

   ii) is an employee, agent, advisor, or consultant to the Contractor or to the best of the Contractor's knowledge any subcontractor or supplier to the Contractor.

c) Neither the Contractor nor any officer, director, employee, agency, parent, subsidiary, or affiliate of the Contractor shall have an interest which is in conflict with the Contractor's faithful performance of its obligation under this Agreement; provided that the County, in

its sole discretion, may consent in writing to such a relationship, provided the Contractor provides the County with a written notice, in advance, which identifies all the individuals and entities involved and sets forth in detail the nature of the relationship and why it is in the County's best interest to consent to such relationship.

d) The provisions of this Article are supplemental to, not in lieu of, all applicable laws with respect to conflict of interest. In the event there is a difference between the standards applicable under this Agreement and those provided by statute, the stricter standard shall apply.

e) In the event Contractor has no prior knowledge of a conflict of interest as set forth above and acquires information which may indicate that there may be an actual or apparent violation of any of the above, Contractor shall promptly bring such information to the attention of the County's Port Engineer. Contractor shall thereafter cooperate with the County's review and investigation of such information, and comply with the instructions Contractor receives from the Port Engineer in regard to remedying the situation.

ARTICLE 43. PRESS RELEASE OR OTHER PUBLIC COMMUNICATION

Under no circumstances shall the Contractor without the express written consent of the County:

a) Issue or permit to be issued any press release, advertisement or literature of any kind which refers to the County, or the Work being performed hereunder, unless the Contractor first obtains the written approval of the County. Such approval may be withheld if for any reason the County believes that the publication of such information would be harmful to the public interest or is in any way undesirable; and

b) Communicate in any way with any contractor, department, board, agency, commission or other organization or any person whether governmental or private in connection with the Services to be performed hereunder except upon prior written approval and instruction of the County; and

c) Except as may be required by law, the Contractor and its employees, agents, subcontractors and suppliers will not represent, directly or indirectly, that any product or service provided by the Contractor or such parties has been approved or endorsed by the County.

ARTICLE 44. BANKRUPTCY

The County reserves the right to terminate this contract, if, during the term of any contract the Contractor has with the County, the Contractor becomes involved as a debtor in a bankruptcy proceeding, or becomes involved in a reorganization, dissolution, or liquidation proceeding, or if a trustee or receiver is appointed over all or a substantial portion of the property of the Contractor under federal bankruptcy law or any state insolvency law.

ARTICLE 45. GOVERNING LAW

This Contract, including appendices, and all matters relating to this Contract (whether in contract, statute, tort (such as negligence), or otherwise) shall be governed by, and construed in accordance with, the laws of the State of Florida. Venue shall be Miami-Dade County.

ARTICLE 46. INDIVIDUALLY IDENTIFIABLE HEALTH INFORMATION and/or PROTECTED HEALTH INFORMATION

Any person or entity that performs or assists Miami-Dade County with a function or activity involving the use or disclosure of "Individually Identifiable Health Information (IIHI) and/or Protected Health Information (PHI) shall comply with the Health Insurance Portability and Accountability Act (HIPAA) of 1996 and the Miami-Dade County Privacy Standards

Administrative Order. HIPAA mandates for privacy, security and electronic transfer standards, include but are not limited to:

1. Use of information only for performing services required by the contract or as required by law;
2. Use of appropriate safeguards to prevent non-permitted disclosures;
3. Reporting to Miami-Dade County of any non-permitted use or disclosure;
4. Assurances that any agents and subcontractors agree to the same restrictions and conditions that apply to the Contractor and reasonable assurances that IIHI/PHI will be held confidential;
5. Making Protected Health Information (PHI) available to the customer;
6. Making PHI available to the customer for review and amendment; and incorporating any amendments requested by the customer;
7. Making PHI available to Miami-Dade County for an accounting of disclosures; and
8. Making internal practices, books and records related to PHI available to Miami-Dade County for compliance audits.

PHI shall maintain its protected status regardless of the form and method of transmission (paper records, and/or electronic transfer of data). The Contractor must give its customers written notice of its privacy information practices including specifically, a description of the types of uses and disclosures that would be made with protected health information.

ARTICLE 47. COUNTY USER ACCESS PROGRAM (UAP)

a) User Access Fee

Pursuant to Miami-Dade County Budget Ordinance No. 03-192, this Contract is subject to a user access fee under the County User Access Program (UAP) in the amount of two percent (2%). All sales resulting from this Contract, or any contract resulting from the solicitation referenced on the first page of this Contract, and the utilization of the County Contract price and the terms and conditions identified herein, are subject to the two percent (2%) UAP. This fee applies to all Contract usage whether by County Departments or by any other governmental, quasi-governmental or not-for-profit entity.

The Contractor providing goods or services under this Contract shall invoice the Contract price and shall accept as payment thereof the Contract price less the 2% UAP as full and complete payment for the goods and/or services specified on the invoice. The County shall retain the 2% UAP for use by the County to help defray the cost of the procurement program. Contractor participation in this invoice reduction portion of the UAP is mandatory.

b) Joint Purchase

Only those entities that have been approved by the County for participation in the County's Joint Purchase and Entity Revenue Sharing Agreement are eligible to utilize or receive County Contract pricing and terms and conditions. The County will provide to approved entities a UAP Participant Validation Number. The Contractor must obtain the participation number from the entity prior to filling any order placed pursuant to this Section. Contractor participation in this joint purchase portion of the UAP, however, is voluntary. The Contractor shall notify the ordering entity, in writing, within 3 work days of receipt of an order, of a decision to decline the order.

For all ordering entities located outside the geographical boundaries of Miami-Dade County, the Contractor shall be entitled to ship goods on an "FOB Destination, Prepaid and Charged Back" basis. This allowance shall only be made when expressly authorized by a representative of the ordering entity prior to shipping the goods.

The County shall have no liability to the Contractor for the cost of any purchase made by an ordering entity under the UAP and shall not be deemed to be a party thereto. All orders shall be placed directly by the ordering entity with the Contractor and shall be paid by the ordering entity less the 2% UAP.

c) Contractor Compliance
If a Contractor fails to comply with this Article, that Contractor may be considered in default by the County in accordance with Article 24 of this Contract.

ARTICLE 48. SEAPORT SECURITY
The Contractor shall comply with all Seaport security requirements, including such requirements as to inspection of vehicles entering and leaving the secured area(s) of the Port and personnel identification badge as required by Chapter 28-A of the Miami-Dade County code and Appendix D.

ARTICLE 49. E-Verify
Contractor acknowledges and agrees to utilize the U.S. Department of Homeland Security's E-Verify System to verify the employment eligibility of (a) all persons employed by the Contractor to perform employment duties within Florida during the term of the Agreement; and (b) all persons (including subcontractors/subconsultants/subvendors) assigned by the Contractor to perform Work pursuant to the Agreement with the County. The Contractor acknowledges and agrees that use of the U.S. Department of Homeland Security's E-Verify System during the term of the Agreement is a condition of the Agreement with the County.

ARTICLE 50. SCRUTINIZED COMPANIES
By executing this Agreement through a duly authorized representative, the Contractor certifies that the Contractor is not on the Scrutinized Companies with Activities in Sudan List or the Scrutinized Companies with Activities in the Iran Petroleum Energy Sector List, as those terms are used and defined in Sections 287.135 and 215.473 of the Florida Statutes. In the event that the Contractor is unable to provide such certification, the Contractor shall execute the Agreement through a duly authorized representative and shall also initial this space: _____. In such event, the Contractor shall furnish, together with this Agreement, a duly executed written explanation of the facts supporting any exception to the requirement for certification that it claims under Section 287.135 of the Florida Statutes. The Contractor agrees to cooperate fully with the County in any investigation undertaken by the County to determine whether the claimed exception would be applicable. The County shall have the right to terminate this Agreement for default if the Contractor is found to have submitted a false certification or to have been, or is subsequently during the term of the Agreement, placed on the Scrutinized Companies for Activities in Sudan List or the Scrutinized Companies with Activities in the Iran Petroleum Energy Sector List.

ARTICLE 51. SURVIVAL
The parties acknowledge that any of the obligations in this Agreement will survive the term, termination and cancellation hereof. Accordingly, the respective obligations of the Contractor and the County under this Agreement, which by nature would continue beyond the termination, cancellation or expiration thereof, shall survive termination, cancellation or expiration hereof.

IN WITNESS WHEREOF, the parties have executed this Agreement effective as of the contract date herein above set forth.

Contractor	Miami-Dade County
By: _____	By: _____
Name: Liu Qi Zhong	Name: _____
Title: Vice President	Title: _____
Date: September 23, 2011	Date: _____
Attest: _____ Corporate Secretary/Notary Public	Attest: _____ Clerk of the Board
Corporate Seal/Notary Seal	Approved as to form and legal sufficiency
	_____ Assistant County Attorney

1.1 INTRODUCTION/BACKGROUND

Miami-Dade County, hereinafter referred to as the "County," as represented by the Miami-Dade County Seaport Department has completed its solicitation for the design, fabrication, erection, assembly, painting, commissioning, transportation, installation, re-commission, testing and certification of 65 Long Ton Capacity, Super-Post-Panamax, "H" Frame, Dockside, Rail-mounted Gantry Container Handling Cranes (the "Cranes") as complete structures and fully operational including warranty of the same. The County, at its sole discretion, shall also have the option to purchase from the Contractor spreaders, parts, components and related services for any of the Seaport's cranes (existing or new).

The Contractor shall have the Cranes installed and fully operational at the Lummus Island Container Crane Facility at the Port of Miami, Miami, Florida, USA, five-hundred forty (540) calendar days from the date of Notice-to-Proceed with Work from the County.

1.2 REQUIREMENTS AND SERVICES TO BE PROVIDED

The Contractor shall furnish and make fully operational four (4) Cranes, in accordance with this Scope of Work and Technical Specifications (attached to this appendix as Attachment A), to be installed at the Gantry Crane Wharf on the South side of Lummus Island, Port of Miami, Miami, Florida USA. The Work to be performed by the Contractor includes, but is not limited to, providing all labor, materials and services for the design, fabrication, erection, assembly, painting, commissioning, testing, transportation, installation, re-commissioning, testing and certification of four (4) 65 Long Ton capacity, Super Post-panamax, "H" Frame, Dockside, Rail-mounted Gantry Container Handling Cranes as completed structures including a warranty of same. No additional work shall be performed by the Contractor at the Port of Miami, except re-installation of components as a result of transportation, touch-up painting (as required), re-commissioning, testing, certification and completion of all punch list items of the Cranes. The design criteria, characteristics and features of the Cranes are delineated in the Technical Specifications attached hereto.

The Contractor shall be responsible to provide and pay for all items, facilities and services necessary for proper execution and completion of the Work, temporary or permanent, in accordance with the conditions of this Agreement, except as expressly provided otherwise.

The County, at its sole discretion, has the right to require the Contractor to furnish, install and make operational, in accordance with the Technical Specifications attached herein, spreaders, parts and components for any of the Seaport's Cranes (existing or new) based on the pricing included in Appendix B.

B. Delivery and Completion Work

The Contractor shall install fully operational Cranes at the Port of Miami within five-hundred forty (540) calendar days from the date of Notice to Proceed with Contract Work from the County in accordance with the Technical Specifications.

C. Legal Restrictions, Permits and Traffic Provisions

The County will waive all fees and charges normally required for the dockage and storage area facilities on the Port of Miami for the time required to unload and make the Cranes operational. A Delivery Site shall be provided at the Port to unload the Cranes and perform all Work to make the Cranes operational for commercial service. The use of the Delivery Site is strictly limited to

Work as specified herein the Technical Specifications and for the specific time required to perform this said Work as enumerated herein. The dockage is limited to the unloading operation of the Cranes as approved by the Port of Miami Berthing Office and the United States Coast Guard.

The Contractor shall be responsible for obtaining local contractor services as required to include stevedores, to unload and make the Cranes operational. The Contractor shall be responsible to secure and pay for all US work VISA(s), permits, fees and licenses necessary for the proper execution and completion of the design, fabrication, assembly, erection, installation, painting, commissioning, testing, transportation, delivery, unloading, commissioning, testing and certification of the Cranes and any worked related to the successful completion of the Project.

D. Contract Administration

The Port Engineer, or designee, shall be the authorized administrator for the County of this Agreement. The Port Engineer may elect to assign Seaport Capital Development staff and contracted personnel to represent the County as necessary to assist in the administration of this Agreement.

The County may also contract for consulting crane engineering services as needed to assist the County in its review of the Contractor's performance. The County may request that such Consulting Engineer perform certain other services on this Project on the County's behalf. In addition to these consulting crane engineering services, the County may also contract with inspection services and testing laboratories for any work required in the performance of the Work. If the County does acquire consulting engineering and/or other services as described herein, it will advise the Contractor. The Contractor shall cooperate with the County's Consulting Engineer as it pertains to providing access for inspections, reporting and related matters. The County may also request that the Contractor provide copies of certain documentation resulting from Work hereunder to the County's Consulting Engineer.

All assigned County, Consulting Engineer and Representatives staff will be acting as representatives and agents for the County and shall have free access to all documents, materials, Work sites and Work related to the Services provided to the County by the Contractor at all times for measuring and observing the same. The Contractor shall afford this said assigned staff, Consultants and Representatives all the necessary facilities and assistance for so doing.

The Port Engineer may elect to provide additional Consulting Engineers to assist in the carrying out their responsibilities. The authority of such engineers shall be as set forth and defined by the Port Engineer.

The Port Engineer will review and approve, for conformance with the design concept of the Work and with the requirements established in this Agreement, or take other appropriate actions upon Contractor's Submittals such as designs, progress payments, shop drawings, product data and samples. The County's approval of a specific item shall not indicate approval of an assembly of which the item is a component.

The Consulting and/or Crane Engineer will not be responsible for notifying the Contractor when to begin, cease or resume work on individual operations, for giving early notice of the rejection

of faulty work, for supervising the work, or for serving as an arbiter in establishing subcontract limits between any parts of the work, unless otherwise directed to do so by the Port Engineer.

E. Project Schedule

The Contractor shall submit the Project Schedule to the Port Engineer for review and approval within fifteen (15) days after Notice-to-Proceed. The Project Schedule is to include but not be limited to the planning, design, submittals, fabrication, erection, installation, painting, commissioning, testing, transportation, delivery, re-commissioning, final testing, certification and hand-over of the Cranes for commercial operation as required herein. All schedule issues shall be addressed and resolved prior to the Pre-design Conference (Kick-off Meeting) that shall be held at the Port's Capital Development offices no later than twenty-five (25) days after Notice-to-Proceed is. The Pre-design Conference may be held as a telephone or video conference as approved by the Port Engineer.
The Contractor, Port Engineer and the County's Representative may schedule telephone and/or on-site conferences at the Contractor's or the Port's offices as necessary to expedite the planning, design, fabrication and the Work to be performed. All Project Schedule milestones may not be changed, except upon the written approval of the Port Engineer.

The Contractor shall assist the Port Engineer and Representatives in reviewing and analyzing said schedule.

The Project Schedule shall delineate all milestones, details and interface of activities necessary for the successful completion of the Work within the time specified herein. Unless otherwise directed by the County in writing, the Contractor shall perform the Work in strict conformance with the approved Project Schedule and the Specifications.

The schedule shall detail principal activities at the site(s) of the Work as well as off-site activities including, but not limited to, design, design drawing submittals, approvals, procurement, fabrication, erection, assembly, transport of goods to work sites, installation, painting, commissioning, testing, transportation of the Cranes to the Port of Miami, delivery, installation, re-commissioning, final testing, certification and hand-over of Cranes for commercial operation in accordance with all requirements herein and with the Technical Specifications. The schedule shall show with sufficient detail and sequence all activities, their descriptions, duration, start and finish dates and dependencies, including the work of subcontractors, subconsultants and suppliers both on and off the site(s), all as necessary to complete the work.

The Contractor shall promptly advise the Port Engineer in writing of any milestone or occurrence requiring substantial revision of or deviation from the schedule and shall furnish a revised schedule within five (5) calendar days of such (prior to) occurrence for approval. Review, approval or disapproval of a scheduled milestone shall in no way waive any of the requirements for Contract completion time, or relieve the Contractor of any of his obligations under this Agreement.

F. On Site Inspections at Manufacturing Facility

The Port Engineer and/or his Representative(s) shall conduct inspections of materials, equipment and any Work in progress, make comments and approve of Work during each phase

of the Work including the design, fabrication, erection (assembly) at the different fabrication and assembly sites where the Work is being performed and at delivery of the Cranes to the Port as specified in the Technical Specifications. Additionally, prior approval at any fabrication, manufacturing, assembly and erection site of any Work herein, shall not relieve the Contractor from complying with the Technical Specifications and repairing any defects or deficiencies found throughout the execution of the Work.

G. Testing

The Contractor shall provide the necessary material certifications and perform all testing in accordance with all applicable codes, industry standards and the hereto attached Technical Specifications. Certificates of inspection of testing shall indicate if that portion of the Work inspected and/or tested meets the minimum requirements of the standard of regulation(s) specified. Certificates shall include the name of Contractor, project name, description of inspection and/or test performed, time period in which said activity(ies) was performed, detailed results, printed name and signature of qualifier, and location and date of inspection or test. The qualifiers credentials of certifications and expertise shall be provided as required by the Port Engineer.

The County reserves the right to retain the services, at the County's expense, of professional material testing and inspection firm(s) and laboratories to carry out inspections and tests on materials, Crane components, assemblies and fabrication processes before and after incorporation into the Crane works.

If any test(s), whether performed by representatives of the Contractor or the County, show that any part of the Works, materials or components that have been assembled, or any materials or components to be incorporated therein, do not meet (non-conformance with) the standards as set forth in this Agreement, the County shall have the option to reject all the materials, parts, components and works associated with the non-conformance. Rejected materials, works and components shall be removed and replaced by the Contractor at its expense with materials, works and components in accordance with the Technical Specifications of this Agreement and as approved by the Port Engineer. Rejected or non-conforming items will not be paid for by the County until the non-conformance is removed and its replacement has been assembled, installed as required by this Agreement and approved by the Port Engineer.

The Contractor shall provide access to the County and its Representatives to all works and to any plant fabricating and/or assembling of the Cranes or Crane components and parts for the purpose of carrying out inspections, sampling, testing, certifications, etc. A quality assurance (QC/QA) plan approved by the County shall be followed by the Contractor as specified in the Technical Specifications. Any non-conformance with the quality assurance plan will be cause for rejection of the materials, parts components and/or of Work in question unless a solution is offered to the County, which is acceptable to the Port Engineer.

H. Responsibility for Deviations

The County's review of design drawings, material or equipment shall not relieve the Contractor of its responsibility for any deviation from the requirements of this Agreement and its Technical Specifications, unless the Contractor has specifically informed the County in writing of such deviation at the time of submission and the County has given written approval for the specific deviation. Additionally, the Contractor shall not be relieved from its responsibility for errors or omissions in the design calculations, design shop drawings, materials, fabrication, components,

assemblies, quality control, erection, painting, commissioning, testing, certifications, equipment failures and/or the Cranes' operational requirements by the County's review thereof.

I. Schedule of Values

Not applicable.

J. Method and Times of Payment

All monetary transactions shall only be performed in United States Dollars (USD) without exceptions. Payment milestone are as stated in the terms and conditions of the Agreement.

K. Liquidated Damages

Are as stated in the terms and conditions of the Agreement.

M. Contractor Submittals

The Contractor shall submit documentation in accordance with the Project Schedule for review by Port Engineer and its Representatives for all Work as required herein including but not being limited to the Technical Specifications. Upon completion of the Work, as-built drawings and manuals shall be submitted as required by the same.

1. Design and Fabrication Submittals

   The Contractor shall provide the Port Engineer and/or its designee Submittals in accordance with the Project Schedule and Technical Specifications for review. Should the Contractor proceed with procurement of materials, parts, components and fabrication prior to notification by the County that submittal review is complete; the Contractor shall do so at its own risk. County review of design drawings will include the general scheme and character of the details, but not the checking of dimensions, nor will such review relieve the Contractor from the responsibility of executing its Work in accordance with the Contract drawings and Specifications.

   The Contractor shall provide the following:

   a. Design drawings, with calculations, showing the logical development of loads and forces for each load combination for a given component(s) or assembly.

   b. Design drawings of the component(s) or assembly with calculations of the stresses, material used, the allowable stress for the load combination considered, when applicable, with manufacturer's published catalog descriptions, dimensions and rating information.

   c. Assembly and erection drawings.

   d. Design drawings shall include, but shall not be limited to detail drawings of parts, structural, mechanical, electrical and hydraulic drawings, fabrication drawings, field layout drawings and all similar types of drawings. As the Cranes shall be shipped to the Port of Miami fully erected and operational, design drawings shall include drawings, calculations and procedures for loading and off-loading of the Cranes and drawings showing the Cranes preparation for ocean shipment. This includes preparation being provided for protection against salt water on Crane parts. Design drawings shall contain all required details and information in

reasonable scale and enough views to clearly show the work to be done or the item to be furnished as approved by the Port Engineer.

2. As-built Drawings and Manuals
The Contractor shall furnish as-built drawings, calculations, test results and maintenance and operations manuals as specified in the Technical Specifications. The final record drawings used in the construction of the Cranes, including details of all parts and components, shall be furnished to the Port of Miami for use only in maintaining the structure, machinery, hydraulic, and electrical equipment. Subject to Florida's Public Records Laws, these copies of drawings shall be maintained as private information to the Port of Miami and its employees, for the sole purpose of making repairs and replacements to the equipment. They shall not be used in any way, by the Port of Miami to infringe on any copyrights or patents. The drawings and manuals for the Cranes shall also be made available to the County in an electronic format as required by the Technical Specifications.

N. Calculations
Calculations for the design of the Cranes will be provided as required herein and in accordance with the Technical Specifications.

O. Field Office
The County shall provide the Contractor with suitable field office space near the installation Work Site of the Cranes for up to five (5) persons during the unloading, re-commissioning, testing and certification of the Cranes. Additionally, the Contractor shall be provided with a Delivery Site to make the Cranes operational.

P. Training
The Contractor shall provide training as required herein and in accordance with the Technical Specifications.

Q. Seaport Security
The Contractor shall comply with all Federal and Seaport security requirements, including such requirements as to inspection of vehicles entering and leaving the secured area(s) of the Port and personnel identification badge as required.

R. Traffic Control
The Contractor shall be responsible for traffic control and maintenance of safety devices surrounding the installation Work Site which are necessary to adequately warn port users, other contractors and County personnel working at or near the site that work is in progress and caution is to be exercised. The Contractor shall manage the barricades required. All work related with Traffic Control and management shall be directly coordinated with the Port's Chief of Operations.

S. Safety
The Contractor shall comply with requirements herein including the Technical Specifications. A Safety Officer/Representative shall be assign to the Project for its duration. At a minimum, the Safety Officer shall be physically present at Port of Miami for the complete time period from the Cranes delivery date through commissioning, testing, certifications and placement into operation of each Crane delivered to the Port. The Contractor shall be responsible for initiating,

maintaining and supervising all safety precautions, the Delivery Site and programs in connection with said Work. The Contractor shall submit its final Safety Plan for on-site Port re-commissioning to the Port Engineer sixty (60) days prior to shipment of Cranes.

T. Punch List

The Port Engineer or his Representative(s) shall perform a final complete inspection and test the Crane(s) as specified in but not limited to the Technical Specifications for compliance with this Agreement. All Crane deficiencies and items not in compliance with the Agreement shall be noted in a Punch List. Upon completion of Punch List, the Contractor will be provided with said list. Final acceptance shall not be authorized until all Punch List items have been addressed and resolved to be in compliance with these specifications and to the satisfaction of the County.

U. Delivery Site and Clean Up

The Contractor shall be provided a Delivery Site at the gantry wharf located on the South side of Lummus Island Container Terminal for unloading, installation, commissioning, testing and make operational the Cranes as required by the Technical Specifications. The area for four (4) cranes shall consist of approximately 115 meters (377 feet) long x 45 meters (147.5 feet) from the waterside face of the concrete sea wall/bulkhead to the landside of the landside gantry rails as authorized by Port Operations. Additional area may be provided upon the Contractor's requested during equipment staging and unloading of the Cranes from the transportation vessel.

The Contractor shall be responsible for all Work and management of and within the Delivery Site for as long as the Contractor is afforded the Delivery Site. The upkeep and control of the Cranes and all other equipment and materials within this site is the responsibility of the Contractor. All Work performed within the site shall be directly coordinated with the County's Representatives.

The Contractor shall remove from the Port of Miami property all excess materials and debris resulting from the Work. No burning or disposal of materials will be allowed on the Delivery Site. All disposal functions must be in accordance with applicable US and local codes and regulations.

The Work Site shall be kept clean during the progress of all Crane Work. The Contractor shall provide sufficient sanitary facilities and trash containers as needed. The Contractor shall take whatever measures are necessary to avoid causing paint over-spray during painting and the creation of undue dust on surrounding premises. The Contractor shall be responsible for any damage caused by all Work performed by the Contractor including paint over-spray or dust from its operations. The Port Engineer's opinion will be the determining factor in reviewing these matters.

No materials or rubbish shall be allowed to go adrift or to be placed, spilled, dropped, thrown, or otherwise dumped into the surrounding bodies of water including Fisherman's Channel. Any debris afloat or dumped in the surrounding bodies of water or Channel as a result of the Contractor's Work and operations shall be immediately retrieved by the Contractor. Any oil, detergent or other deleterious substance which is spilled into the Fisherman's Channel, Biscayne Bay or surrounding bodies of water as a result of the Work, shall be the responsibility of the Contractor to immediately clean and mitigate. The Contractor shall comply with all laws, regulations and rules governing working adjacent to such waters as well as with all applicable air pollution and environmental control rules, regulations ordinances and statutes and any

materials or equipment that may fall into the water shall be retrieved at the Contractor's expense.

Upon Completion of all Work at the Port of Miami, the Contractor's shall hand over the Delivery Site to the Port in the same condition in which it was initially provided.

TECHNICAL SPECIFICATIONS

FOR

Dockside Container Handling Gantry Cranes at the Seaport Port of Miami Cranes No. 13-16 Contract No. 750

Rope Towed Trolley Design

Port of Miami Project No. 2010.035
Gantry Container Handling Cranes
Lummus Island Container Crane Wharf

Revision: Conformed, August 30, 2011

This page has been left intentionally blank

Table of Contents

SECTION 1 – INTRODUCTION 1
1.1 Summary 3
1.2 Design Responsibility 4
1.3 Contractor's Documentation 5
1.4 Definitions 6
1.5 Acronyms and Abbreviations 8

SECTION 2 – GENERAL REQUIREMENTS 11
2.1 General Characteristics **Error! Bookmark not defined.**
2.2 Geometric Dimensions 14
2.3 Operational Features And Capacities 14
2.4 Operating Speeds And Accelerations (Minimum) 15
2.5 General Operating Environment And Condition 16
2.6 Site Conditions For Acceptance 16
2.7 Duty Cycle 17
2.8 Structural Feastures 18
2.9 Mechanical Features 19
2.10 Electrical Features 20
2.11 Miscellaneous 21
2.12 Preferred Suppliers 21

SECTION 3 – STRUCTURAL SPECIFICATIONS 23
3.1 General 25
3.2 Standards 25
3.3 General Design Requirements 26
3.4 Structural Deflection, Torsion and Stiffness 24
3.5 Gantry Frame 27
3.6 Boom and Main Girder 28
3.7 Crane Classification 29
3.8 Minimum Crane Stability 29
3.9 Loads 30
3.10 Load Cases 32
3.11 Gantry Trucks 33
3.12 Ladder, Stairways, Catwalks, And Platforms 33
3.13 Gantry Securing Devices 33
3.14 Stowage Pins 33
3.15 Hurricane Tie Downs 33
3.16 Miscellaneous Requirements 34
3.17 Enclosures (General) 34
3.18 Machinery House 36
3.19 Overhead Service Crane 37
3.20 Main Trolley and Catenary Trolleys Structure 38
3.21 Operator's Cabin (General) 39
3.22 Operator's Cabin – Visibility And Glass 40
3.23 Operator's Cabin – Mounting And Access 40
3.24 Operator's Cabin - Structural 41
3.25 Operator's Cabin – Window Washing Platforms 39
3.26 Trolley Rail 39
3.27 Materials 42
3.28 Structural Maintenance 43
3.29 As-Built Wheel Load Test / Verification 43
3.30 Wind Tunnel Test 44

SECTION 4 – MECHANICAL SPECIFICATIONS 45
4.1 General 47
4.2 Standards 49
4.3 Miscellaneous Requirements 49

4.4	Noise Level	49
4.5	Prohibited Items	50
4.6	Drive Mechanisms	51
4.7	Main Hoist Mechanism	51
4.8	Hoisting Accessories	52
4.9	Telescopic Spreader	52
4.10	Cargo Hook Beam	54
4.11	Boom Hoist	54
4.12	Boom Latch Mechanism	55
4.13	Main Trolley General Requirements	56
4.14	Main and Catenary Trolley Drive Mechanisms	56
4.15	Main Trolley & Catenary Trolley Rope Tensioning Devices	57
4.16	Spreader Trim Adjustment	56
4.17	Snag Load Protection	57
4.18	Trolley Bumpers	57
4.19	Trolley Wheel/Rail System	58
4.20	Wire Rope Re-Reeving Winch	58
4.21	Main Trolley Stowage	58
4.22	Miscellaneous Main Trolley Provisions	59
4.23	Manual Maintenance Hoist/JIB	59
4.24	Machinery House Room and Cabin Ventilation	59
4.25	Machinery Room/Miscellaneous	61
4.26	Wheels - General	61
4.27	Main and Catenary Trolley Wheels	62
4.28	Gantry Travel Wheels	62
4.29	Gantry Travel Bumpers	63
4.30	Gantry Travel Trucks - General	63
4.31	Gantry Travel Trucks - Structural	63
4.32	Gantry Travel Trucks - Mechanical	63
4.33	Gantry Travel Trucks - Miscellaneous	64
4.34	Lubrication	64
4.35	Reeving, General Provisions	65
4.36	Wire Rope	65
4.37	Wire Rope Fittings	66
4.38	Sheaves	66
4.39	Drums	67
4.40	Head Block	67
4.41	Bearings	68
4.42	Gear Drives	69
4.43	Gear Materials	69
4.44	Strength And Service Factors For Gears And Reducers	70
4.45	Gears	71
4.46	Reducers And Gear Cases	71
4.47	Shafts And Axles	72
4.48	Keys	72
4.49	Splines	72
4.50	Fasteners	73
4.51	Bolts/Bolted Connections	73
4.52	Set Screws	73
4.53	Couplings	73
4.54	Chain Drive	73
SECTION 5 - ELECTRICAL SPECIFICATIONS		76
5.1	General	78
5.2	Design Standards	78
5.3	Maintainability	78
5.4	General Provisions	78
5.5	Power Supply	80
5.6	Shore Power Provisions	80
5.7	Main Power Cable Reel	81

5.8	Power Factor Correction	82
5.9	Drives	82
5.10	Power Conversion Units	82
5.11	Main Hoist Drive	83
5.12	Main and Catenary Trolley Drives	83
5.13	Gantry Drive	84
5.14	Boom Hoist Drive	84
5.15	Motors	85
5.16	Brakes (General)	86
5.17	Main Hoist Brakes	86
5.18	Main and Catenary Trolley Drive Brakes	87
5.19	Gantry Drive Brakes	87
5.20	Storm Brakes	87
5.21	Boom Hoist Brakes	88
5.22	Auxiliary Drives (General)	88
5.23	Auxiliary Main Hoist Drive	89
5.24	Auxiliary Boom Hoist Drive	89
5.25	Auxiliary Main Trolley Drive	89
5.26	Controls	89
5.27	Programmable Logic Controller (PLC)	94
5.28	Crane Control Fault Diagnostics	94
5.29	Wiring And Conduit	97
5.30	Spreader Reel and Cable (Trolley To Headblock)	99
5.31	Limit Switches And Interlocks	100
5.32	Electrical Protective And Control Devices	104
5.33	Operator's Cabin	104
5.34	Emergency Stop Switches	105
5.35	Boom Hoist Operator's Cabin	106
5.36	Dock Level Control Station	106
5.37	Dock Level Monitoring Station	107
5.38	Ventilation, Heating And Air Conditioning	107
5.39	Slack Rope/Snag And Overload Protection	108
5.40	Gantry Warning Devices	109
5.41	Drive Room	109
5.42	Panel Boards	110
5.43	Festoon System	110
5.44	Complementary Requirements	111
SECTION 6 – ADDITIONAL REQUIREMENTS		117
6.1	Training Of County Personnel At Manufacturer's Site	119
6.2	Training Of County Personnel At Port of Miami	119
6.3	Submittals For County Review	119
6.4	As-Built Drawings And Manuals	124
6.5	Personnel Elevator	126
6.6	Stretchers	127
6.7	Fire Extinguishers	127
6.8	Maintenance Air Compressor	127
6.9	Crane Name Plates And Signs	129
6.10	Welding Machine	128
6.11	Waste Lube Oil Drain System	128
6.12	Tools And Work Bench	128
6.13	Storage Lockers	129
6.14	Boom Hoist Operator's Cabin	129
6.15	Video Camera	129
6.16	Crane Model	129
6.17	Spare Parts	130
SECTION 7 – MANUFACTURING		132
7.1	General	134
7.2	Quality Control/Quality Assurance	134

7.3	Inspections	135
7.4	Record Keeping	135
7.5	Certification Of Welders, Operators And Procedures	136
7.6	Inspection Methods	136
7.7	Fabrication Inspections And Tests (To be carried out by Contractor at Contractor's facility)	139
7.8	Surface Preparation And Painting	142
7.9	Commissioning And Performance Tests	148
SECTION 8 – SHIPPING AND DELIVERY		154
8.1	General	156
8.2	Contractor Submittals	156
8.3	Loading And Shipping	156
8.4	Pre-Shipment Certificate	157
8.5	Delivery and Unloading	157
8.6	Final Installation, Commissioning And Testing	157
8.7	Final Inspection And Punchlist	158
8.8	Certification	159
8.9	Acceptance Procedures	159
8.10	Clean-Up And Final Acceptance	159
SECTION 9 – TECHNICAL ATTACHMENTS		160

POM 1 - General Arrangement Drawing
POM 2 - Headblock Drawing
POM 3 - Spreader Indicating Lights Arrangement
POM 4 - Spreader Wiring Diagram (2 sheets)
POM 5 - Stowage Pin Arrangement
POM 6 - Tie Down Arrangement
POM 7 - Operator Left Console Arrangement
POM 8 - Operator Right Console Arrangement
POM 9 - Cabin Indicating Light # 1 Arrangement
POM 10 - Cabin Indicating Light # 2 Arrangement
POM 11 - Boom Operator Station Console Arrangement
POM 12 - Dock Level Control Station
POM 13 - Miami Harbor Photo – Project Location
POM14 – Ground Level Monitoring Station

SECTION 1

INTRODUCTION

This page has been left intentionally blank.

SECTION 1 - INTRODUCTION

1.1 SUMMARY

1.1.1 The Port of Miami is to procure four (4) 65 Long Ton capacity Super Post-panamax Ship-to-shore (Quay), "H" Frame, Dockside, Rail-mounted Container Handling Crane(s) and related equipment, parts and components.

1.1.2 The Crane(s) and all other equipment, parts and components shall be delivered to the Port fully erected, assembled, commissioned and tested in accordance with the requirements of the Scope of Work and herein these Specifications. The Crane(s) and equipment shall be unloaded onto the Lummus Island Container Terminal Gantry Wharf on the south side of the Port of Miami. No additional work shall be performed by the Contractor at the Port of Miami, except the installation, minor reassembly, touch-up painting (as required), re-commissioning, retesting and certification of the Crane.

1.1.3 The Work to be performed by the Contractor includes, but is not limited to, providing all labor, materials and services for the planning, design, engineering, fabrication, manufacturing, erection, assembly, installation, painting, commissioning, testing, transportation, installation, re-commissioning, retesting and certification of 65 Long Ton capacity, Super Post-Panamax, Gantry Cranes as completed structures including a warranty of same as required herein these Specifications and the Scope of Work.

1.1.4 The Contractor shall submit to the County a Project Schedule and comply with the same as required herein these Specifications and the Scope of Work.

1.1.5 The Contractor shall provide and pay for all items, facilities and services necessary for proper execution and completion of the Work, temporary or permanent, in accordance with any Contract issued as a result of the RFP.

1.1.6 These Technical Specifications serve as the principal documents regulating the Work to be performed under any contract with the County. The Work shall be performed in strict compliance with these Technical Specifications. If any deviation from these requirements is discovered, the Contractor shall take immediate corrective actions and shall correct the non-compliance and/or deficiencies. The County and its representatives shall not be held accountable and/or responsible for any and all of the Contractor's non-compliance.

1.1.7 These Technical Specifications provide structural, mechanical and electrical details and criteria for the design, fabrication, erection, installation, painting, re-commissioning, testing, shipping, delivery, make operational the Cranes, final testing and commissioning. The requirements, criterion and details specified herein are the minimum acceptable for the execution of the Work.

1.1.8 The Contractor shall obtain, from the certifying agencies, certification of the Cranes as for cargo handling use of the capacity under the spreader system and all other certifications required herein and as specified in these Specifications. The Contractor shall submit to the certifying agencies all necessary calculations, drawings and data necessary for such certification or approval. The County will cooperate with Contractor as necessary for this purpose.

1.1.9 The Cranes shall be designed for maximum simplicity, maintainability, and fail safe operation in the event of any one failure.

1.1.10 Safety and reliability of the Cranes is paramount, maintainability is critical and low energy consumption and durability of operation are essential. It is expected the Cranes will be used to load and discharge containers up to twenty four (24) hours a day during all but the most adverse weather conditions.

1.1.11 The Cranes shall: 1) have adequate safety devices to protect personnel, the Crane runway, the Cranes, the vessel, rolling stock and containers from injury or damage during service, 2) be highly reliable through use of conservative design factors, 3) be economical for the purpose intended, 4) be highly productive in continuous operation for an estimated useful life of twenty five (25) years. (The County recognizes periodic needs for repair or replacement of rotating equipment and periodic inspection and repairs of structures.) 5) require a minimum of maintenance, and 6) be able to withstand variations in the weather during operation without damage or deterioration (other than paint) of the Cranes.

1.1.12 All components, parts, materials and equipment used in the construction of these Cranes shall be new, unused, and free of defects. All these parts and components shall be manufactured for the marine environment of Tropical South Florida.

1.1.13 Spare and replacement parts shall be available for the Cranes for at least fifteen (15) years after the date of the Final acceptance Certificate of the last Crane delivered to and accepted by the County in accordance with the provisions of this contract. The Contractor shall provide to the County a list of spare parts to support the Cranes as recommended by the original equipment manufacturer. The spare parts shall be identified on this list by the original manufacturer and part number. The County will have the right to replace any part of the Cranes directly from the Contractor or from any subcontractor or vendor of the County's choosing. The Contractor agrees that it has not made nor will it make any agreement with any Subcontractor or Vendor which would nullify or restrict the County's right to do so.

1.1.14 All communication, correspondence, training, instruction books, manuals, nameplates, and submittals including design calculations, catalog cuts, illustrations, printed specifications, weld qualifications, mill tests, inspection reports, literature, data, or other required data shall be in the English language.

1.2 DESIGN RESPONSIBILITY

1.2.1 The Contractor shall be responsible for the design of Cranes. The County is not, and does not propose to be, the design agent.

1.2.2 The Contractor shall design and shop detail the Cranes which will comply with the space limitations, loading performance requirements and design criteria called for in the Specifications.

1.2.3 The Contractor will prepare complete design calculations. All calculations will be made by a qualified Contractor's Engineer, registered in the U.S.A., or country of manufacture, or country of the Fabrication Site and will be stamped with his registered engineer's stamp, which will show the branch of engineering in which he is registered and his registration number, and will be signed and dated by him. All drawings, both assembly and detail, will be stamped, signed and dated by the Contractor's Engineer showing that he has reviewed the drawing and they accurately reflect the conclusions of his design calculations.

1.2.4 The Contractor's Engineer shall insure that shop work meets the quality that his design requires.

1.2.5 Deviations from the specified concepts, systems or components specified in the Specifications or accepted by the County from the Contractor's proposal shall be individually brought to the County's attention. The County reserves the right to refusal of each proposal based solely on its own overall best interest. In the event of such refusal, the Contractor will, without delay, diligently pursue alternate state-of-the-art designs. Where the Contractor can show evidence of benefit to the County, the County will not unduly delay acceptance of such concepts, systems, or components.

1.2.6 The Port Engineer shall be entitled during manufacture to inspect, examine and test on the Fabrication Site during working hours, the materials and workmanship and check the progress of manufacture of the Cranes, and if part of any Crane is being manufactured on other premises the Contractor shall obtain for the County's Engineer permission to inspect, examine

and test as if the said Crane was being manufactured on the Contractor's premises. Such inspection, examination of testing, if made, shall not release the Contractor from any obligation under this Agreement.

1.3 CONTRACTOR'S DOCUMENTATION

1.3.1 The Contractor shall submit for review and approval by the County copies of all design drawings, schematics, calculations, catalog information and assembly and arrangement drawings used by the Contractor to design, manufacture, and erect the Cranes. These calculations shall demonstrate conformance of the Contractor's design with the Specifications.

1.3.2 The sole purpose of the review is to verify compliance of the design concept with the requirements of the Specifications. It is not to be construed as a check of the adequacy of the Contractor's design and in no way relieves the Contractor of its responsibility to conform to all the requirements of the Specifications and to guarantee the adequacy of the equipment furnished for the intended purpose.

1.3.3 The review of the calculations and drawings by the County does not relieve the Contractor of its responsibilities and requirements for compliance with the Contract and these specifications. If the Contractor believes that any of the requirements of these Specifications are not stringent enough, it shall advise the County accordingly and shall use the more stringent criteria at no additional cost to the County.

1.3.4 Submittals, drawings and calculations will be in the English language and dimensioning throughout will be in the either the Imperial or metric system.

1.3.5 All such information will be clearly presented and will be full and complete and sufficient to properly identify and describe all aspects of the Work required to be performed by the Contractor so the County may check all details for conformance with the Specifications. Submittal, drawings and calculations will be submitted in a logical order so they may be checked as they are received against previous information submitted. Within thirty (30) days after Notice to Proceed, the Contractor shall submit a schedule of Submittals as described in Section 6.3, together with the anticipated dates upon which they will be submitted.

1.3.6 The sequence of submission of the Submittals shall follow the County approved Submittal Schedule. Submittals shall be presented such that all information is available for reviewing each in detail. Each submission of Submittals by the Contractor must be accompanied by a letter/email of transmittal containing a list of Submittal giving titles and numbers. Decisions on these Submittals will be given by the County in writing within thirty (30) calendar days after receipt. Every revision made during the life of the Contract shall be shown by number, date, the reviewing person and subject, in a revision block and notation shall be made in the Submittals/drawing margin to permit rapid location of the revision. The time consumed by the Contractor in submitting and obtaining review action on Submittal shall be included in the time allowed for completion of the Contract. If revisions are made after a Submittal has been submitted and reviewed, the Contractor shall furnish corrected Submittals with description of required corrections in the same form require herein.

1.3.7 The Contractor shall permit the County's Engineers and Representatives to review the detail shop drawings at the Fabrication Site(s) to ensure compliance with design concepts. Drawings shall indicate the method of weld inspection and the Contractor's weld inspection procedure shall be submitted as part of the drawing submittals. Drawings and calculations submitted for review will be thoroughly checked, signed, dated, and stamped by the Contractor's responsible engineer prior to submittal. Structural drawings will have been checked, signed, dated, and stamped by the Contractor's Structural Engineer. Revisions to previously reviewed drawings will be initialed by the Contractor's responsible Engineer to attest to his review and approval of the revision, and will be resubmitted.

1.3.8 All of the applicable requirements of this Section with reference to drawing submittals shall apply equally to design calculations, catalog cuts, illustrations, printed specifications, weld

qualifications, mill tests, or other required data. All correspondence, drawings, calculations, literature instruction books, data, training, and nameplates shall be in the English language.

1.3.9 The County will consider Contractor's requests to substitute alternate parts for those specified by proprietary name in the Specifications, but it will grant approval for those substitutions only when in its best overall interest to do so considering all factors including durability, reliability, availability, existing spare parts inventory, cost, and standardization.

1.3.10 Deviations from the specified concepts, systems or components specified in the Specifications or accepted by the County from the Contractor's proposal shall be individually brought to the County's attention. No deviations will be considered in the County's review unless called to the attention of the County in writing.

1.3.11 Upon request at any future time, the Contractor shall provide at no cost to the County specific design drawings, calculations, catalogue information and shop detail drawings required the County for internal operation, maintenance or upgrading activities. The Contractor grants the County unlimited rights to use all calculations and drawings for maintaining, troubleshooting, operating, modifying and repairing the Cranes; however, the County will use reasonable endeavors to protect the Contractor's proprietary rights and information if the above necessitates disclosure to third parties.

1.4 DEFINITIONS

The following words and expressions used in this Technical Specifications shall be construed as follows, except when it is clear from the context that another meaning is intended:

1.4.1 The words "**Approved Equal**" to mean approval of or by the County or its designee.

1.4.2 The word "**Consultant**" or "**Consulting Engineer**" to mean any person, firm, entity or organization other than the employees of the County or the Contractor and who contracts with the County to furnish engineering services in connection with the Work.

1.4.3 The word "**Contractor**" to mean the selected Proposer that receives any award of a contract from the County as a result of this Solicitation, also to be known as "the prime Contractor".

1.4.4 The word "**County**" to mean Miami-Dade County, a political subdivision of the State of Florida, USA.

1.4.5 The words "**County Manager**" to mean the administrative agent of the County Mayor acting for and on behalf of the County Commission.

1.4.6 The word "**Crane**" or "**Cranes**" to mean the equipment being purchased as a result of the Work for the purpose of loading and unloading shipping containers from maritime seagoing vessels.

1.4.7 The word "**Crane Engineer**" to mean Port of Miami Crane Management, Inc., (PMCM, aka Crane Management) which is the Port Engineer's designee that may direct, manage and oversee the execution of this Work at the discretion of the Port Engineer.

1.4.8 The word "**Days**" to mean Calendar Days.

1.4.9 The word "**Department**" to mean Seaport Department same as Port of Miami.

1.4.10 The word "**Deliverables**" to mean all documentation and any items of any nature submitted by the Contractor to the County's Project Manager for review and approval pursuant to the terms of this Agreement.

1.4.11 The words "**Delivery Site**" to mean the work area and installation site at the Port of Miami where the erected and fully operational Crane(s) are off-loaded from the transportation vessel

on to the rails on the Port's gantry wharf located on the South side of Lummus Island, Port of Miami, FL USA.

1.4.12 The words **"directed"**, **"required"**, **"permitted"**, **"ordered"**, **"designated"**, **"selected"**, **"prescribed"** or words of like import to mean respectively, the direction, requirement, permission, order, designation, selection or prescription of the County's Project Manager; and similarly the words **"approved"**, **"acceptable"**, **"satisfactory"**, **"equal"**, **"necessary"**, or words of like import to mean respectively, approved by, or acceptable or satisfactory to, equal or necessary in the opinion of the County's Project Manager.

1.4.13 The word **"Gantry Wharf"** to mean the wharves where the Port's Quay Cranes are located to load and unload the container carrying ships calling the Port of Miami.

1.4.14 The words **"High Winds"** or **"High Winds Shutdown"** to mean wind conditions when winds are equal to or exceeds thirty-nine miles per hour (39 mph).

1.4.15 The word **"Inspector"** to mean the duly authorized representative of the County or Crane Engineer designated to inspect, reject and/or accept the Work as specified herein the Technical Specifications.

1.4.16 The words **"Manufacturing Facility"**, **"Manufacturing Site"** or **"Contractor's Facility"** to mean the Contractor's facility where the Crane(s) are erected, components are installed, painted, commissioned, made fully operational, tested and loaded on to the transportation vessel/ship.

1.4.17 The word **"Material"** or **"Materials"** to mean all materials incorporated in the Work, or used or consumed in the performance of the Work.

1.4.18 The words **"Miami-Dade County"**, the County to mean the political sub-division of the State of Florida where the Port of Miami is physically located and to which the Port of Miami belongs to.

1.4.19 The word **"Owner"** to mean Miami-Dade County as assigned and represented herein to be the Port Director.

1.4.20 The word **"Plans"** to mean all of the official approved Plans, or exact reproductions thereof, which show the location, character, details, dimensions, and specifications of the Work to be done which are part of the Contract.

1.4.21 The word **"Port"** or **"Seaport"** to mean the **"Port of Miami"**, Miami-Dade County Seaport Department, Florida, USA.

1.4.22 The words **"Port Director"** to mean the Chief Executive of the Port of Miami, Miami-Dade County Seaport Department, Florida, USA. The Port Director's designee is the Port Engineer.

1.4.23 The words **"Port Engineer"** to mean the Port Director's designee which is the County's Representative that shall be the authorized administrator of any Work performed as a result of any Contract.

1.4.24 The word **"Project"** to mean all work inclusive of and associated with this Contract which is Seaport Project No. 2010.035.

1.4.25 The words **"Project Manager"** or **"PM"** to mean the Port Engineer's designee who shall be the duly authorized representative designated to direct and manage the Contract and the Work.

1.4.26 The words **"Port Representative"** or **"PR"** to mean the Port Engineer, who shall be assigned as the County's representative to oversee the Project.

1.4.27 The word "**Proposer**", "**Submitter**" or "**Respondent**" to mean the person, firm, entity or organization, as stated on Form A-1, submitting a response to this Solicitation.

1.4.28 The word "**Representative**" to mean a person, organization and/or any crane consulting engineering firm, inspection firm or testing laboratory which is directly contracted by the County or the Crane Engineer and is assigned by the County or Port Engineer to oversee and/or perform any work on behalf of the County

1.4.29 The words "**Scope of Services**" to mean Section 2.0 of the Solicitation, which details the work to be performed by the Contractor.

1.4.30 The word "**Solicitation**" to mean the Request for Proposals (RFP) document and all associated addenda and attachments which is the County's RFP No. 750 .

1.4.31 The word "**Specifications**" to mean all directions, provisions, and requirements contained herein or attached hereto, together with all written agreements made or to be made, setting out or relating to the method and manner of performing the Work or to the quantities and qualities of materials and labor to be furnished under the Contract to include but not limited to the Technical Specifications.

1.4.32 The word "**Subcontractor**" or "**Subconsultant**" to mean any person, entity, firm or corporation, other than the employees of the Contractor, who contracts with the Contractor to furnishes labor and/or materials, in connection with the Work, whether directly or indirectly, on behalf and/or under the direction of the Contractor and whether or not in privity of Contract with the Contractor.

1.4.33 The word "**Super Post-panamax**" to mean dockside ship-to-shore container handling gantry crane also know as quay crane with a minimum outreach to work a container ship stacking at least seventeen (17) containers wide across its beam. In this particular project, the Crane shall reach twenty-two (22) containers wide across a ship berthed alongside the Port of Miami Gantry Wharf.

1.4.34 The words "**Technical Specifications**" to mean the written contents herein, the Sections that are strictly of a technical nature which provide the guidelines for execution of the Work.

1.4.35 The words "**Work**", "**Services**" "**Program**", or "**Project**" to mean all matters and things required to be performed by the Contractor in accordance with the Scope of Services and terms and conditions of a Contract.

1.5 ACRONYMS AND ABBREVIATIONS

1.5.1 The following abbreviations may be used throughout these Technical Specifications;

AC	Alternating Current
CMMS	Crane Monitoring and Maintenance System
E-House	Electric(al) House/Room
ft	feet (foot)
ft/s	feet per second
ft. lb	foot pound
DC	Direct Current
DLCS	Dock Level Control Station
DLMS	Dock Level Monitoring Station
I/O	Input/output
Kg	Kilogram
KV	Kilovolt
KVA	Kilovolt-ampere
lbs	Pounds
LAN	Local Area Network
LS	Landside
LT	Long Ton (2,240 pounds)

m	meters
m/s	meter per second
mm	millimeters
mph	miles per hour (presented in these specifications is based on "statute" miles per hour)
N.M.	Newton Meters
MLW	Mean Low Water
MT	Metric Ton (2,200 pounds)
NTP	Notice to Proceed
PDF	Portable Document Format as used in Adobe software.
RFP	Request for Proposal
RMS	Root Mean Square
SWL	Safe Working Load
T	Ton/Short Ton (2,000 pounds)
WS	Waterside
UHMW	Ultra High Molecular Weight Polyethylene to protect Crane structure from wire rope wear

1.5.2 For additional abbreviations related to crane design, fabrication and the Work herein, see the individual General information sub-section of each of the specific Sections of these specifications.

This page has been left intentionally blank.

SECTION 2

GENERAL REQUIREMENTS

This page has been left intentionally blank.

SECTION 2 - GENERAL REQUIREMENTS

The itemization of characteristics, features and requirements enumerated herein below in this section represents a partial listing of these requirements that shall be incorporated in the Crane(s) and shall not be misconstrued, by the Contractor, as being complete or all inclusive. It is the Contractor's responsibility to design, fabricate, erect, install and make operational crane(s) complete with the minimum characteristics, features and requirements as enumerated and detailed in these Technical Specifications. The following enumerated General Requirements are the minimum required and acceptable by the County.

2.1 GENERAL CHARACTERISTICS

2.1.1 Super Post-Panamax, designed to minimize crane weight

2.1.2 "H" frame construction: box girders, when not hermetically sealed, provided with access detail for inspection, provided with vent ports to prevent condensation, internal ladders, and conduit chases.

2.1.3 Boom: hinged, luffing type

2.1.4 Main Girder (Landside): fixed

2.1.5 Boom and Main Girder Construction: trapezoidal open or closed boxed girder, or, truss type design of welded steel construction as approved by County.

2.1.6 Machinery House and Electric Control Room: The Machinery House and Electric Control Room shall be the same structure and is to be supported from the landside cross girder and/or on the backreach area of main girder (LS Boom). It shall contain the drive machinery in the Drives Room for the Main Hoist, Main Trolley, and Boom Hoist as well as the Electrical Control Room.

2.1.7 Main and Catenary Trolleys: The Main Trolley and Catenary Trolleys shall be rope towed. The Catenary Trolleys shall be rope towed and driven by the Main Trolley and from one another.

2.1.8 Boom-up operation for maintenance only with empty spreader: Main Trolley to be stowed in parked position.

2.1.9 Main Hoist and spreader function shall be possible with Boom-up and Main Trolley in parked position.

2.1.10 Non-articulating Gantry Equalizer System.

2.1.11 All design and fabrication criteria must conform to FEM, AISC, AWS, ASME, NEC, NEMA, SSPC, NACE, OSHA, FBC, and all other specified codes herein noted. Although FEM will be accepted as the primary design code, the contractor must comply with all applicable codes of the United States of America, State of Florida and Miami-Dade County.

2.1.12 All materials, parts, components, and equipment used on the Cranes shall be specifically design and constructed for the marine environment of Tropical South Florida. No deviation is permitted.

2.1.13 The Crane supplier must conform to all local, state, and federal environmental regulations as required for the delivery, unloading, make operational and commissioning of Cranes to the Port of Miami.

(a) DERM - Department of Environmental Resource Management, Miami-Dade County, Florida, USA
(b) FDEP - Florida Department of Environmental Protection, Florida, USA
(c) EPA - Environmental Protection Agency, USA

2.2 GEOMETRIC DIMENSIONS

2.2.1	Rail gauge (existing):	30.48m	100.0 ft.
2.2.2	Elevation of Landside (LS) rail over waterside (WS) rail:	0.3048m	1.0 ft.
2.2.3	Setback of waterside (WS) rail from outer face of fender (approx.):	9.84m	32.3 ft.
2.2.4	Outreach from waterside (WS) rail (Working Outreach) (centerline of waterside rail to centerline of container with Trolley bumpers uncompressed):	68.0m	223.10 ft.
2.2.5	Backreach from Landside (LS) rail (centerline of Landside rail to centerline of container with Trolley bumpers uncompressed). If counterweight is required, the Contractor may shift location of Machinery House on the backreach as approved by County.	26.0m	85.3 ft.
2.2.6	Hoisting height (top of WS rail to underside of adjustable spreader):	43.00m	141.04 ft.
2.2.7	Lowering distance (top of WS rail to underside of adjustable spreader with ship on sight):	16.0m	52.48 ft.
2.2.8	Total Lift Height:	59.00m	193.52 ft.
2.2.9	Clearance between legs for passage of containers:	18.3m	60.0 ft.
2.2.10	Vertical clearance under portal beam/girder:	15.2m	50.0 ft.
2.2.11	Height to top of sill beam (maximum):	8.0m	26.2 ft.
2.2.12	Distance of mounting pins of crane hurricane tie-down mechanism(Shall be confirmed by Contractor)	17.2m	56.5 ft.
2.2.13	Maximum overall length between bumpers (crane width bumpers uncompressed):	27.0m	88.5 ft.
2.2.14	Distance between pulley blocks center-to-center for attaching the spreader and cargo beam:	4.878m	16.0 ft.
2.2.15	Overall (Air) height limit:	None	

2.3 OPERATIONAL FEATURES AND CAPACITIES

2.3.1 Spreader:

Capacity under spreader, single lift: 50 LT
Capacity under spreader, twin lift (**Rated Load**): **65 LT**

2.3.2 The 65 LT capacity is intended as an intermittent, part time rating. The Crane(s) shall have adequate structural strength, stability, mechanical capacity, and electrical capacity to handle two (2) twenty foot (20) containers weighing up to 32.5 LT each, safely and efficiently, but the structural fatigue life, mechanical durability and electrical thermal sizing requirements of the Specification may be based on 50 LT capacity. The Contractor shall state the number of cycles provided in design for the 65 LT rating; however, the minimum number acceptable shall be 600,000 cycles. The Crane shall be capable of unrestricted operations with a 65 LT load for a minimum of four (4) hours without injurious overheating of the electrical equipment (motors). The Contractor shall provide the cool-down period required upon completion of four (4) hours 65 LT operation.

2.3.3 Capacity under cargo beam: 100 LT

2.3.4 Capacity under head block: (Contractor to provide)

2.3.5 Percentage (minimum) of driven wheels: 75% Waterside
75% Landside

2.3.6 Drives shall be synchronized to prevent gantry skewing.

2.3.7 Container handling with boom down and in stowed position.

2.3.8 Gantry travel with boom down, or in stowed position.

2.3.9 All Crane operations to be controlled from Operator's Cabin with the exception of boom.

2.3.10 Boom operation from Boom Hoist Cabin only.

2.3.11 Gantry, hoisting and spreader operation from operator's cabin and Ground Level Control Station.

2.4 OPERATING SPEEDS AND ACCELERATIONS (minimum)

2.4.4	Hoisting with twin-lift spreader only (no load):	155 m/min	508 ft/min.
2.4.5	Hoisting 65 LT (rated load) with twin-lift spreader:	70 m/min.	230 ft/min.
2.4.6	Hoisting 100 LT with cargo beam: (speed restricted due to operation)	30 m/min.	98 ft/min.
2.4.7	Lowering twin-lift spreader only (no load):	155 m/min	508 ft/min.
2.4.8	Lowering 65 LT with twin-lift spreader:	70 m/min.	230 ft/min.
2.4.9	Lowering 100 LT with cargo beam: (speed restricted due to operation)	30 m/min.	98 ft/min.
2.4.10	Hoist acceleration time w/rated load;	1.7 sec to 70 m/min	230 ft/min
2.4.11	Hoist acceleration time w/twin-lift spreader only;	3.5 sec to 155 m/min	508 ft/min
2.4.12	Trolley travel speed with rated load:	240 m/min	787 ft/min
2.4.13	Trolley travel acceleration time w/rated load:	3.5 sec to 240m/min	787 ft/min
2.4.14	Crane travel (gantry):	46 m/min.	151 ft/min
2.4.15	Crane travel (gantry) acceleration time:	6.0 sec to 46 m/min	151 ft/min
2.4.16	Boom: raising/lowering maximum time:	5.0 min	

2.4.17 The deceleration times shall be less than acceleration times and based on the maximum motor/drive system capabilities. The Contractor shall maximize the performance of the Crane during the design, fabrication, commissioning and testing. Speeds, accelerations and decelerations for intermediate loads shall be based on constant motor horsepower.

2.4.18 Maximum speeds shall be achieved with Maximum Operating Wind from the worst direction. Acceleration and deceleration times shall be based on 50% Operating Wind Load from the worst direction.

2.5 GENERAL OPERATING ENVIRONMENT AND CONDITION

2.5.1 The Contractors shall study the onerous climatic conditions which exist, as failure to do so may result in the production of a Crane(s) and equipment unsuitable for the required application. The site of the works in Miami is in an area of high temperature and high humidity, which in conjunction with a salty dust-laden marine environment produces very severe corrosive conditions. The design features, all material and equipment supplied and the protective treatment of steelwork must be designed for the following conditions:

Item	Low	High
Electrical	0°C	45°C
Mechanical	0°C	45°C
Structural	0°C	45°C

(Plus allowance for solar radiation that may increase surface temperature to 55°C)

(For equipment located in theMachinery House, the maximum ambient shall be 55°C)

Relative humidity 100%

2.5.2 The Crane(s) and equipment will be designed to operate with minimum maintenance in the defined conditions, and care must be taken to ensure against overheating of the electrical and mechanical equipment, especially where exposed to direct sunlight.

2.5.3 The Crane(s) and its components shall be designed for wind loads as specified by local codes, but no less than those specified in Section 3.8, Crane Design Loads.

2.5.4 The Crane and its components shall be designed for earthquake loads as specified by local codes, but no less than the loads specified in Section 3.8.

2.5.5 The Crane and its components shall be provided with appropriate lightning protection.

2.6 SITE CONDITIONS FOR ACCEPTANCE

2.6.1 The Contractor shall ascertain, by visiting and inspecting the delivery site at Port of Miami that all applicable local conditions at the Delivery Site have been considered in the design of the Crane(s) including the severe climatic and atmospheric conditions, wind load requirements, earthquake requirements, dock interface conditions, and that the Crane(s) can operate effectively without any restrictions due to conditions at the Port of Miami. The Contractor shall submit this in writing to County prior to delivery of the Crane(s) to the Port of Miami.

2.6.2 **Maximum allowable gantry wheel loads for normal operation with 20.1 meter per second (45 mph) wind are as follows:**

Vertical wheel load spread over the effective length of the wheel group under each main equalizer:

Waterside: 74.4 metric tonnes/meter (50.0 kips/ft.)
Landside: 59.5 metric tonnes/meter (40.0 kips/ft.)

The Contractor shall also provide for the County's information maximum wheel loads for operation with 28 meter per second (62.6 mph) wind.

2.6.3 **Maximum allowable gantry wheel loads, stowage pin loads, and tie down loads for the stowed/hurricane condition are as follows:**

Vertical wheel load spread over the effective length of the wheel group under each main equalizer:

Waterside: 80.8 metric tonnes/meter (54.3 kips/ft.)
Landside: 83.6 metric tonnes/meter (56.2 kips/ft.)

Horizontal stowage pin load:
Waterside: TBD
Landside: TBD

Tie down uplift loads:
Waterside: TBD
Landside: TBD

2.6.4 All of the above loads are un-factored. Wind directions shall be for the worst case.

2.6.5 Existing waterside and landside crane rails are 171 lbs/yd installed to the following tolerances:

2.6.6 Rail centers (gage): ± 7.0 mm (± 0.27 inch)

2.6.7 Maximum rail out of levelness: one corner of crane with respect to other three corners ±25 mm (±1 inch)

2.6.8 Rail elevations: top of landside rail is 0.3048m (1.0 ft) above top of waterside rail

2.6.9 Site acceptance by Contractor shall include resolution of dock interface conditions including crane rail size, relative elevations, tie downs, stowage pin sockets, rail bumpers, cable trough, power supply, dock allowable loads and shipping clearances including depth of water and width of channel at the delivery location. The Contractor shall assure its procedure to off load the Crane(s) at delivery location does not cause unacceptable blockage of the channel to other traffic.

2.7 DUTY CYCLE

2.7.1 The theoretical duty cycle for use in calculating times and equipment ratings of the main hoist and trolley drive systems shall consist of removing and replacing the containers of a typical hatch on a vessel 22 containers wide with 9 x 8.5 ft. container high stowage above deck and 11 high below deck. The equipment ratings shall also consider the various worst case container handling cycle paths encountered in container handling operations.

2.7.2 The duty calculations shall be based on the following:

(a) 50 LT load each way.

(b) All loads are lifted 1m (3 feet) clear of the highest obstruction in their travel path.

(c) All loads will be lowered to within 1m (3 feet) of surface they are to be set upon, stopped and then lowered onto the surface. Similarly, containers to be put in cells will be stopped 1m above the cell guides and then lowered into the guides.

(d) A dwell time of 2 seconds will be allowed for engaging or disengaging twist locks, and for entering cell guides. These are the only dwell times to be considered.

(e) Each motion accelerates, travels and decelerates at the maximum rates for which the system is designed.

(f) Hoist and trolley travel occur simultaneously whenever the container is clear of obstructions.

(g) The cycle is repeated indefinitely.

(h) The wind load is 50% of WLO.

2.7.3 The Contractor shall submit for review, the theoretical duty cycle block diagram for the main hoist and trolley drive.

2.7.4 The theoretical duty cycle for the trim system components shall consider the above main hoist and trolley duty cycle with the trim system completing two operations per container cycle.

2.7.5 The theoretical duty cycle for the purposes of calculating times and equipment designs of boom drive shall be based on the following:

(a) Raise boom from operating to stowed position.
(b) Lower boom from stowed to operating position.
(c) The cycle is to be performed twice with no dwell time.
(d) The wind load is 50% of WLO.

2.7.6 The theoretical duty cycle for purposes of calculating times and equipment designs of the gantry drive shall consist of continuous gantry travel (to duty rating of motor for short time rated motors) with empty spreader at any speed to full rated speed against the most severe wind load (including diagonal wind) equivalent to 50% of full operating wind load, unless other specified operating modes govern the design.

2.7.7 In addition to normal operating requirements specified elsewhere, to allow travel of the Crane to a tie down position during high wind, gantry motors and brakes shall provide capability for gantry travel with 32m/s (71.5 mph) wind (into and with) in the least favorable direction, including angled wind. Motors shall have thermal capacity to travel into the worst direction wind for a minimum of 200 m (650 ft) without overheating. Motor brakes shall hold against 32m/s (71.5 mph) wind from the worst direction without use of storm brakes or other securing devices. Calculations demonstrating this capability shall be submitted for County's review.

2.8 STRUCTURAL FEATURES

2.8.1 Boom and Main Girder construction shall be trapezoidal box girder type with side mounted rails, unless otherwise approved by the County.

2.8.2 All members shall be amply proportioned to provide a rigid structure. Frame stiffness shall be adequate to avoid dynamic resonance.

2.8.3 Fatigue design for Group A8 as per F.E.M. (Class of Utilization U9 - over 4,000,000 cycles).

2.8.4 Access ladders and/or walkways to all structural members and maintenance points.

2.8.5 Walkways, stairways, railings and non-painted surfaces to be hot dipped galvanized and painted to match crane color as approved by the County.

2.8.6 Interior surfaces of open/non sealed structural members to be prime and painted.

2.8.7 Cab window wash, trolleys and festoon service platforms in the backreach.

2.8.8 Stowed wind load design: FEM, ASCE and FBC (Latest edition with Supplements). A wind tunnel test shall be used to confirm the Contractor's computed wind loading for wheel loading, stability calculations, and tie down calculations.

2.8.9 Crane stowage pins are to be mounted on the centerline of the Cranes (both rails) and two (2) per rail are to be provided.

2.8.10 Structural joints shall be all welded. Design of bolted field splices shall be pre-approved by County. Field welding of splices is not permitted.

2.9 MECHANICAL FEATURES

2.9.1 Rope towed Main Trolley and Catenary Trolleys (landside and seaside), with Trolley drive machinery located in the Machinery House. Catenary Trolleys to be rope towed from Main Trolley.

2.9.2 Trolley wheel guide rollers on side of trolley rails.

2.9.3 Machinery House vents located on walls.

2.9.4 Open gearing and worm gears are not acceptable.

2.9.5 Spreader trim (±5 degrees) controls from Operator's cabin and Dock Level Control Station.

2.9.6 Fully closed hydraulic anti-snag system as approved by the County.

2.9.7 Air compressor in Machinery House with rigid airline on Boom and Main Girder to system components.

2.9.8 Overhead Service Crane in Machinery House to remove all Machinery Room components and parts to include electrical and control panels and components from within the E-House.

2.9.9 Floor located maintenance crane access hatches for hoisting and lowering crane components from the trolleys and Machinery House.

2.9.10 Wire rope re-reeving system.

2.9.11 Drip pans beneath all wire rope drums where feasible.

2.9.12 Fully enclosed, weatherproof, force ventilated and pressurized Machinery House located on the landside cross girder and/or on the backreach area of main girder (LS Boom).

2.9.13 Fully enclosed, weatherproof climate-controlled Electric Control House (E-House) located in the Machinery House.

2.9.14 Stowage Pin locking device and automatic emergency braking to be installed on the gantry, both Landside and Waterside of Crane.

2.9.15 Pin connectors for head block to spreader shall be identical as currently in use at the Port of Miami, see attached Headblock drawing in Section 9 of these Specifications.

2.9.16 Spreaders to be interchangeable with existing of POM Cranes 11 and 12.

2.9.17 Gantry anti-collision system with slowdowns mounted at ground level.

2.9.18 Gantry motor brakes for high-speed release and total braking capacity adequate for 32.0m/s (71.5 mph wind).

2.9.19 Storm wheel brakes on all idler gantry wheels for total braking capacity adequate for 40 m/s (89.5 mph wind), in conjunction with the holding power of 100 % of gantry motor brakes.

2.9.20 Hydraulic and lubrication tubing, piping and appurtenances shall be stainless steel.

2.9.21 Boom latches (thruster operated) at apex on waterside pylon.

2.9.22 Oil drainage system for main and boom hoist reducers and hydraulic systems shall drain down the landside legs to ground level. The trolley reducer shall drain to the trolley.

2.9.23 Spare parts availability in US for 15 years, within 24 hours of written request.

2.9.24 Ganged grease lubrication for gantry, Main trolley and Catenary mechanisms, boom components and pylon head (top of WS apex) shall be provided.

2.9.25 Auxiliary disk brakes for main hoist drum shall be provided.

2.9.26 Auxiliary disk brakes for boom hoist drum shall be provided.

2.10 ELECTRICAL FEATURES

2.10.1 Main power at Port of Miami wharf: 13,200 VAC, 3 phase, 60 hertz.

2.10.2 On wharf existing Panzerbelt main power cable trench to cable horn in underground main power pit.

2.10.3 Main Power Cable Reel for power and communications through fiber optic cable.

2.10.4 AC drive and control system with CMMS.

2.10.5 CMMS in the Electrical Room with remote terminals in the Operator's Cabin and Ground Level Monitoring Station, and, with capability for remote monitoring and accessibility through LAN.

2.10.6 Independent drive mechanisms shall be provided for the Main Trolley. Each main and auxillary drive shall be located in the Machinery House, and shall consist of AC motors, brakes, gear reducers, couplings and rope drums.

2.10.7 It is intended that a uniform drive and electrical control system be provided by a single manufacturer of electrical control equipment.

2.10.8 As a minimum, main function motors, transformers, Medium Voltage (MV) switchgear, digital drives and equipment included in the drive panels, PLCs, I/O devices, management and diagnostic system (CMS) devices and software, shall be supplied by the control system manufacturer. All equipment shall be readily available in the U.S.

2.10.9 Power cables, control cables and fiber optic data transmission cables shall be separate cables,, except from the trolley to the spreader and main power cable reel.

2.10.10 Display monitor in operator's cabin to show container weight, wind speed, fault log and other real time drive data.

2.10.11 Power to and control of spreader through powered cable reel located on the Main Trolley.

2.10.12 Trim control by electro-mechanical means with hydraulic snag load protection/shutdown.

2.10.13 Slack rope detection through use of load cell system.

2.10.14 Conduit, electrical gutters or junction boxes on exposed areas of sill beams, portal beams, legs, girders, braces, beams, and horizontals trusses only on areas approved by the County.

2.10.15 Climate controlled E-House, Control Room, Operator's Cab and Dock Level Monitoring Station.

2.10.16 Computer system ventilated floor E-house.

2.10.17 Digital wind speed readings from anemometer on an display mounted in the operator's seat console and CMMS. Crane system shall be set such that if high wind alarm, the control system shall automatically shut down control power and set all gantry wheel (storm) and motor brakes. A key-locked bypass button shall be provided on the operator's seat console to allow the maintenance personnel to override the high wind shutdown, reset control power, and gantry the crane to the stowage position.

2.10.18 Electrical welding machine in the Machinery House with leads in rigid conduit to specified locations on the Crane(s).

2.10.19 Auxiliary AC drives for Boom Hoist, Main Hoist and Main Trolley travel. Drive performance shall be submitted for review and approval by the County.

2.10.20 Onboard CMMS in Electrical Room and Dock Level Monitoring Station with remote monitoring provided by others through fiber optic link in the gantry/shore power cable reel.

2.10.21 Dock Level Control Station for maintenance operation of gantry, hoist and spreader operation.

2.10.22 Power line monitor with recording device

2.10.23 Power factor correction using IGBT technology.

2.10.24 Harmonic filter as required for drive system.

2.10.25 No I/O boards and appurtenances installation acceptable in the crane operator's seat consoles.

2.10.26 FAA regulation aircraft warning lights

2.11 MISCELLANEOUS

2.11.1 Storm tie-down arrangement shall be compatible with those existing at the Port of Miami. (Design loads and capability of existing embedded parts shall be verified by manufacturer.)

2.11.2 Flammable materials storage lockers and work bench with vise in boom house.

2.11.3 Fire extinguishers and safety devices as required by applicable codes.

2.11.4 Electronic and hardcopy detail of shop drawings, calculations, maintenance and operation manuals as required.

2.11.5 Fabricate, erect, pre-commission, test and certify crane(s) at manufacturing site. Test, commission and certify crane(s) at Port of Miami gantry wharf.

2.11.6 Delivery Site dock/wharf work area to be provided: approximately 91 m (300 ft.) long x 39.5 m (130 ft.) wide (from the seawall towards landside) at the Port of Miami Wharf 4 directly over the gantry rails for two (2) Cranes.

2.11.7 High speed laser alignment of all Main Hoist, Main Trolley and Boom Hoist motors and drive mechanisms at manufacturing site.

2.11.8 Elevation of waterside rail above MLW: approximately 3.94 m (12.92 ft.)

2.12 PREFERRED SUPPLIERS

2.12.1 The components or parts furnished by the Contractor must be a product of the original licensed (patented) manufacturer or original factory authorized fabricator/supplier. The below list is the minimum required and no substitution will be accepted unless previously approved by the County. These preferences are listed below to maintain commonality on the parts being used on the existing Cranes and the new Crane(s) to be provide by the Contractor.

	COMPONENTS	GANTRY	BOOM HOIST	MAIN HOIST	MAIN TROLLEY	SECTION
2.12.2	Motor Brakes	Bubenzer	Bubenzer	Bubenzer	Bubenzer	5.16
2.12.3	Motor Brake Couplings	Bubenzer	Bubenzer	Bubenzer	Bubenzer	5.16
2.12.4	Motor Disk Brakes	Bubenzer	Bubenzer	Bubenzer	Bubenzer	5.16
2.12.5	Gears and Reducers	ZPMC	ZPMC	ZPMC	ZPMC	
2.12.6	Auxiliary Drum Brakes	None	Bubenzer	Bubenzer	None	
2.12.7	Storm Wheel Brakes	ZPMC				
2.12.8	Thrusters	EMG				
2.12.9	Wire Ropes (in inches)	US Manufacturer or as approved by County				4.39
2.12.10	Brake Couplings	Bubenzer Type K with elastic intermediate ring				
2.12.11	Drum Couplings	ZPMC				
2.12.12	Elevators	ZPMC				
2.12.13	Crane Drive System	ABB				
2.12.14	Spreader	ZPMC				4.9
2.12.15	Spreader Cable Reel	Stemmann with AC inverter Drive				
2.12.16	Main Power Cable Reel	Stemmann with AC Inverter Drive				
2.12.17	Festoon	Wampfler				
2.12.18	Main Drive Electric Motors	Same as main control system manufacturer				
2.12.19	Circuit breakers and starters	Allen-Bradley, Square-D, Cutler-Hammer, ABB				
2.12.20	Switches	Square-D, ABB				
2.12.21	Tachometers	Hubner or County approved equal				
2.12.22	Panelboards	GE, ABB or County approved equal				
2.12.23	Electrical Power Cables and Wiring	Chinese manufacturer				
2.12.24	Control Wiring	U.S. Manufacturer				
2.12.25	Floodlights	Phoenix				
2.12.26	Lighting Protection	Erico System 2000 or County approved equal				
2.12.27	Switch Gear, Transformers	U.S. Manufacturer as approved by County				
2.12.28	Welding Machine	Miller				
2.12.29	Air Compressor	Ingersoll Rand				
2.12.30	Communication System	Whelen				

SECTION 3

STRUCTURAL SPECIFICATIONS

This page has been left intentionally blank.

SECTION 3 - STRUCTURAL SPECIFICATIONS

3.1 GENERAL

3.1.1 The Contractor shall design and shop detail the Crane(s) in accordance with the specified structural provisions herein which shall apply to all portions of the container crane structural framing system, including, but not limited to, Gantry Frame, Boom, Boom suspension, Main Trolley frame, Catenary Trolley frames (landside and seaside), Machinery House, Gantry travel trucks, Electric Control House, machinery and walkway supports and cargo hook.

3.1.2 Structural frame for the container Crane(s) shall be suitable for the service intended. The structural frame shall have the basic qualities of strength, stiffness, lateral stability, torsional stability, elastic stability, ductility, and resistance to fatigue and impact loads. Excessive vibrations of the Crane or vibrations harmful to the Crane shall be avoided.

3.1.3 The Crane design and erection tolerances shall be such that Trolley traverse over the ship from the center of the inboard cell to center of the outboard cell shall not vary from a line normal to the centerline of the waterside gantry rail by more than plus or minus 50mm (2") with the waterside gantry wheels centered on the waterside rails.

3.1.4 The primary design code shall be FEM, however, the Crane design, fabrication, erection, assembly, commissioning and operation shall be in conformance with all applicable codes and as noted herein these specifications. The stowed base wind speed shall comply with that which is required by the Florida Building Code (FBC) and the basic pressure acting in conformance to FEM. (See Section 3.8 for stowed wind load.)

3.1.5 Pre-engineered designs used for other clients may not be accepted. The design of all members and enclosures; namely the legs, sill beams, portal beams, vertical braces, box girder boom sections, pylons, horizontal braces, forestays, house enclosures, operator's cab, gantry trucks, supports, hinges and any other members shall be current and in accordance with the Florida Building Code for Hurricane Conditions and as specified herein. Before fabrication may begin, the specific structural design for the Port of Miami container Crane(s) shall be submitted for the County's review.

3.1.6 The Contractor shall submit for the County's concurrence and/or approval all designs, parts, components, materials and related items to be used in the successful execution of this Work.

3.1.7 All components, parts and materials used in the construction of these Cranes shall be new and free of defects.

3.1.8 Wind loads for structural design shall be based strictly on FEM (for shape factors, wind loads, etc), and only the stability calculations, wheel loads, tie downs loads and stowage pin loads shall be based on the results of the wind tunnel tests.

3.2 STANDARDS

3.2.1 Unless otherwise noted, the current applicable regulations of the following organizations shall be used for the execution of the Work:

ABBREVIATION	ORGANIZATION
AISC	American Institute of Steel Construction
AISE	Association of Iron and Steel Engineers
AISI	Association of Iron and Steel Institute
ANSI	American National Standards Institute

ASNT	American Society for Non-destructive Testing
ASTM	American Society for Testing and Materials
AWS	American Welding Society
BSI	British Standards Institute
CMAA	Crane Manufacturer's Association of America
DIN	Deutsche Industrie Normen
FBC	Florida Building Code
FEM	Federation Europeene da la Manutention
NACE	National Association of Corrosion Engineers
OSHA	Occupational Safety and Health Administration
SDI	Steel Deck Institute
SSPC	Steel Structures Painting Council
SSRC	Steel Structural Stability Research Council

3.3 GENERAL DESIGN REQUIREMENTS

3.3.1 The criteria specified herein represent minimum acceptable standards. If, in the Contractor's opinion and industry standards, any of the standards specified are inadequate or insufficient for the intended use, it shall be the Contractor's responsibility to implement the required criteria at no additional cost to the County. Class of Utilization (U9) (over four million (4,000,000) cycles) shall be the basis of design (Group A8).

3.3.2 The general requirements and crane characteristics are delineated in Section 2 of this Specification.

3.3.3 The following loads shall be calculated, and submitted to the County prior to construction:
(a) Wheel loads
(b) Landside – vertical and lateral
(c) Waterside – vertical and lateral
(d) Bumper forces – landside and waterside
(e) Pin socket (stowed) – landside and waterside
(f) Tie down (stowed) – landside and waterside

3.3.4 Stiffeners shall be made of material with yield strength no less than the base metal of the member that they are stiffening.

3.3.5 Weld details shall be configured to minimize fatigue stress concentrations. Transition elements (corner gussets, sloped thickness changes, etc) shall be incorporated to minimize stress concentration factors. No fatigue details with stress concentrations worse than K3 of Table T. A. 3.6. (1) of FEM 1.001, 3rd Edition Revised 1998.10.01 shall be used.

3.4 STRUCTURAL DEFLECTION, TORSION AND STIFFNESS

3.4.1 All members shall be amply proportioned to provide a rigid structure capable of safe and efficient container operation without excessive vibration. All deflection criteria stated herein unless otherwise noted are absolute deflections with respect to a fixed point on ground and include deflections of gantry frame and of the boom or main girder as applicable. Calculations for deflections and natural frequencies shall be included in the calculations submitted to County's Engineer for review.

3.4.2 The design shall be such, that the absolute maximum horizontal deflection of sea side end of rails at boom tip and land side end of rails at back reach is less than 150mm in any direction under maximum operating wind load when the Rated Load is at the maximum outreach or at maximum back reach.

3.4.3 If proven by detailed finite element structural calculations that the additional crane weight required to meet the 150mm deflection limit of section 3.4.2 prevents compliance with the operating and stowed wheel load allowables specified in section 2.6, the County will consider to reduce the wind load for the 150mm horizontal deflection limit to the wind load based on 20 meter per second wind speed instead of the 28 meter per second wind speed required for full operating wind load. The reduced wind speed applies only to the horizontal deflection limit of section 3.4.2 and all other structural design criteria of the specification shall remain unchanged. The responsibility for providing adequate calculations to prove the wheel load criteria cannot be met with the 28 meter per second operating wind load will be entirely the Contractors.

3.4.4 The design shall be such that the absolute maximum horizontal deflection of sea side end of rails at boom tip or land side end of rails at back reach shall not exceed 400mm in any direction when the gantry is decelerated from rated speed by an emergency stop or by a collision with the trolley located at maximum outreach or at maximum back reach. Stresses and deceleration rates under these conditions shall comply with F.E.M. requirements.

3.4.5 The design shall be such that relative vertical deflection of sea side end of rails at boom tip or land side end of rails at back reach does not exceed 300 mm from the unloaded condition when the Trolley with Rated load travels from centered between the legs to maximum outreach or to maximum back reach.

3.4.6 The design shall be such that the vertical deflection of the boom between forestays and the boom tip shall not impede trolley operations under maximum operating conditions of speeds and accelerations/decelerations set forth in the Specifications.

3.4.7 Structural stiffness of the Boom and Main Girder assemblies shall be adequate to limit angle rotation of the plane formed by the top surface of the trolley rails to no more than .15 degrees from level with worst case eccentric load LLE at maximum outreach or at maximum back reach.

3.4.8 The design shall be such that the calculated natural frequency of the crane will be greater than 0.85 Hz in the Trolley travel direction and 0.40 Hz in the Gantry travel direction. The Contractor shall submit detailed calculations that will demonstrate compliance during the design phase. The natural frequency in both trolley travel direction and in gantry travel direction shall be measured on one crane during final acceptance testing to confirm compliance. During field verification of the as-built natural frequencies, to account for influences of the dock/crane rail support structure and the Crane(s)' gantry travel assemblies, the required natural frequency as demonstrated by the as-built tests shall be no less than 0.65Hz in the trolley travel direction and 0.30 Hz in the gantry travel direction.

3.4.9 The calculated vertical deflection and camber to be manufactured into the boom shall be submitted for review by County's Engineer.

3.5 GANTRY FRAME

3.5.1 All construction shall be welded steel. Field welding of splices is not permitted.

3.5.2 Primary structural members (sill beams, legs, portal girders, trolley girders, boom girders and boom support cross girders) shall be box girder type construction. The interior of all non airtight box members shall be painted with a prime and intermediate epoxy coat, as specified herein, and have adequate drains, as well as continuous internal ladders and passageways for inspection and maintenance. The interior of air tight/hermetically sealed box members shall receive shop /pre construction primer only.

3.5.3 All members, except where not practical or otherwise noted, shall be made airtight by seal welding. Sealed members shall be pressure tested to 0.105 kgf/cm^2, using soap film to demonstrate air tightness. All airtight structures shall be designed for air test loads and calculations submitted for review by the County.

3.5.4 Weather tight manhole openings with hinged, gasketed steel covers shall be provided on the top of unsealed/non air tight members to allow access to the interior of all box girder compartments. Two (2) manholes shall be installed on any member greater than 65 feet long; one (1) at either end of the member.

3.5.5 Incidental structural members, such as wind bracing, machinery supports, and walkway supports may be of any suitable cross section such as pipe, square tube, angle, channel, or side flange beam. All walkway, stairs, handrails and non-painted srfaces shall be hot dipped galvanized.

3.5.6 Pins shall not be used for connections subject to reversal of loads in the operating condition. The allowable stresses shall be as specified by F.E.M.; however, the basic allowable bearing stress for pins shall be as follows:

Rotating Pins:	0.4 Fy (Fy = Elastic Limit)
Non-Rotating Pins:	0.8 Fy
Equalizer Pins:	0.25 Fy (Operating combinations)
	0.4 Fy (All other combinations)

3.6 BOOM AND MAIN GIRDER

3.6.1 The Boom and Main Girder shall be trapezoidal open/closed boxed girder or truss type design of welded steel construction as approved by the County. No other type will be accepted or considered. All efforts shall be employed to minimize the weight of the boom without compromising the structural integrity and torsion as required by these specifications and applicable codes.

3.6.2 The Boom and Main Girder members, except where not practical, shall be made air tight by seal welding. For truss boom type, closed section members of the boom shall be seal welded. Truss members shall be composed of open sections where ever possible and the design shall avoid pockets that may hold water. Sealed members shall be pressure tested to 0.105 kgf/cm^2, using soap fill to demonstrate air tightness. All airtight structures shall be designed for air tight loads and calculations submitted for County review.

3.6.3 The interior surfaces of all non airtight areas of the Crane shall be painted with a primer and intermediate epoxy coat, as specified herein.

3.6.4 Interior areas of the Crane's structure in which access is required shall have hinged manholes for inspection. Edges of openings shall be raised such as would result with doublers. Hinged covers with neoprene rubber gaskets shall be used to cover all openings.

3.6.5 Steel plate diaphragms of the Boom and Main Girders shall be provided inside box-type members to back-up all concentrated loads and connections.

3.6.6 The Boom shall be equipped with luffing falls and shall be hinged so that it can be fully raised to clear the ship's superstructure and rigging. When the Boom is down in the horizontal position, it shall be supported rigidly by the forestays (tie links) with the luffing falls slack.

3.6.7 The forestays (tie links) shall be made of structural steel. Forestays made of wire rope or bridge strand are not permitted.

3.6.8 The heel (hinge) end of the Boom shall be so designed to prevent the boom from falling in the event of hinge pin failure. The hinge and hinge pin shall be designed to transmit the load for

any case of loading and any boom configuration without incurring overstress or wear, and shall function smoothly.

3.7 CRANE CLASSIFICATION

3.7.1 In order to meet the strength and serviceability requirements as generally described in this Specification the Crane(s) shall have a single group classification, based on a single class of utilization and a single load spectrum. Designations used herein refer to the Federation Europeene de la Manutention F.E.M. 1.001, 3rd Edition, 1998, 10.01, Booklet 2. American Institute of Steel Construction (AISC) and Deutsche Industrie Normen (DIN) equivalent classifications and/or later amendments may be approved upon request.

3.7.2 Class of utilization shall be U9 that is, total duration of use of over 4,000,000 hoisting cycles.
(a) Load spectrum class shall be Q3.
(b) Group classification shall be A8.

3.7.3 The Trolley travel operation required with rated load shall be:

(a) on the waterside, 68 meters (223.10 feet) outreach from the centerline of waterside rail;
(b) on the landside, 26 meters (85.3 feet) backreach from the centerline of the landside rail;
(c) for a total run of 124.48 meters (408.4 feet). Containers will be loaded and unloaded on a single cycle, i.e.; one (1) or two (2) container move per cycle.

3.8 MINIMUM CRANE STABILITY

3.8.1 Under operating conditions the Crane(s) shall have a stability factor (ratio of stabilizing moments to overturning moments) of not less than 1.05 considering the effects of a 480 N/m2 wind pressure (28 m per sec/ 62.6 mph) combined with the moment produced by using a maximum container weight of 2 x Rated Load (130 LT) with the trolley located at the maximum outreach and with the trolley at maximum backreach. Stability shall be based on 2 x Rating (100 LT), cargo beam and if over turning moment of 2 x Cargo Beam Rating (200LT) is greater. If boom up operation is required, backward stability shall also comply with these requirements with the boom up and with the trolley at maximum backreach. Worst case angled wind effects shall be included.

3.8.2 With the Trolley with Rated Load located at the maximum outreach and at maximum backreach, if any one of the normal operating loads due to wind or inertial affects are increased by 50% and added to the combination of other normal operating loads, none of the crane legs shall lift off the gantry rail. If boom up operation is required, backward stability shall also comply with this requirement with the boom up and with the trolley at maximum backreach with rated load. Worst case angled wind effects shall be included.

3.8.3 Under overload conditions due to stall, earthquake or collision, with the trolley and Rated Load located at maximum outreach and at maximum backreach, if any one of the overloads is increased by 15% and added to the combination of other normal operating loads due to lifted load and operating wind, none of the crane legs shall lift off the gantry rail. With boom up operation, backward stability shall also comply with this requirement with the boom up and trolley at maximum back reach. Worst case angled wind effects shall be included.

3.8.4 Under stowed conditions, the Crane(s) shall have a stability factor (ratio of stabilizing moments to overturning moments) not less than 1.2 considering stabilizing moment of tie downs with stress levels in tie downs no greater than allowable stress levels for out of service condition. Worst case angled wind effects shall be included.

3.8.5 Uplift forces in tie downs resulting from horizontal loads on stowage pins shall be considered. Unless otherwise approved, appropriate tie downs shall be installed at all four corners of the crane.

3.8.6 Stability and wheel load calculations shall be submitted to County for review.

3.9 LOADS

3.9.1 Loads and load combinations are as specified in this section. Loads due to temperature effects, erection stresses, shipping stresses, and others based on good design practice and the Contractor's experience shall be included in the analysis if they cause significant stresses or fatigue damage. If rational analysis indicates loads larger than specified, the larger loads shall be used.

3.9.2 The Contractor shall design the Crane(s) for all possible loads and load combinations. As a minimum, the following loads, in the combinations as set forth in the F.E.M. Standards shall be considered:

COLL	Collision Load	The loads determined by dynamic analysis assuming that with the Crane traveling at full speed and power off, the gantry bumpers hit the crane stops or hit another stopped crane or (concurrently) the trolley hits its stop at full speed with the power off. No structural damage shall occur.
DL	Dead Load	The weight of the Crane's structure, including all machinery and equipment permanently attached.
EQ	Earthquake Load	Earthquake loads shall be as per local codes for leg lift/stability calculations. For structural design, the more stringent of: a) 0.2 (DL + TL + LL) acting in any horizontal direction, or b) the load corresponding to the lateral acceleration required to cause overturning in any direction with Lifted Load raised to maximum height shall be utilized, unless local codes are more stringent.
EQS	Stowed Earthquake Load	A minimum load of 0.2 (DL + TL) but no less than local code requirements.
IMP	Impact Load	The loads due to vertical acceleration of the lifted load. Impact loads shall be determined as per F.E.M.
LATT	Trolley Lateral Load	The loads imposed on the Crane due to positive or negative acceleration of the trolley or other pieces of equipment which move horizontally. The minimum lateral inertia force developed due to trolley travel shall be at least 0.10 (TL) plus 0.025 (LL) parallel to the travel direction plus a simultaneous load of 0.025 (TL) plus 0.006 (LL) perpendicular to the travel direction.
LATG	Gantry Lateral Load	The loads imposed on the crane due to positive or negative acceleration of the gantry. The minimum lateral forces developed due to gantry travel shall be in accordance with F.E.M. 1.001, latest edition, but shall not be less than 0.10 (TL+ DL) plus 0.05 (LL) parallel to the travel direction and a simultaneous load of 0.025 (TL + DL) plus 0.01 (LL) to the travel direction. If tractive forces and/or anti-sway devices produce forces greater than specified, the greater forces shall be used.
LL	Lifted Load	The load which hangs from the Trolley including headblock, portions of the lifting ropes, sheaves, and

		cargo beam with rated load or, spreader, portions of the lifting ropes, sheaves, and the Rated Load, whichever is greater. For design, the spreader weight shall be no less than 15.422 metric tonne (34,000 pounds) and the Caro Beam weight shall be no less than 5.50 metric tonne (12,100 pounds).
LLA	Structural Fatigue Load Lifted Load	The mean load to be used for structural fatigue stress calculations consisting of a useful load lifted (as defined in FEM 1.001, Section 2.2, i. e. rated load) of 50LT and applied as specified in FEM 1.001, Sections 2.3.1, 3.6.3, 3.6.4 and 3.6.5.
LLE	Eccentric Load	The lifted load wherein the weight of the container(s) and its contents are eccentric to the geometrical center of the container toward either end longitudinally and toward either side transversely. For the design containers, the eccentricities shall be as follows: Two (2) 20 ft. containers, one at 32.5 LT and one (1) empty container, each with 10% longitudinal eccentricity and with 0.25 meters transverse eccentricity, with all eccentricities in the most severe direction. Two (2) 20 ft. 32.5 LT containers each with 10% longitudinal eccentricity and with 0.25 meters transverse eccentricity, with all eccentricities in the most severe direction. One 45 ft. container with 50LT load at 1.4m longitudinal eccentricity and .25m transverse eccentricity.
LLMF	Mechanical Fatigue Lifted Load	The mean load to be used for mechanical fatigue / durability/life calculations of shafts, bearings, couplings, gears and other similar mechanical components consisting of a load lifted (as defined in FEM 1.001, Section 2.2, i. e. rated load) of 50LT and applied as defined in Sections 2.1.3, 2.6.4, and 4.2.1.
RL	Rated Load	The maximum under spreader load (container(s) and its (their) contents) for which the Crane(s) is designed and built and as shown on the nameplates.
SWL	Safe Working Load	The capacity of the Crane(s) for various modes of operation as shown on the nameplates. 65 LT for twin twenty operation and 50 LT for single container, hatch covers, etc. and 100 LT for hook beam.
SN	Snag Load	The load imposed on the Crane due to the headblock and empty spreader traveling at maximum hoisting speed becoming jammed in the ship's cell guides or being accidentally two-blocked against the underside of the trolley, resulting in the kinetic energy of the rotating equipment being dissipated in elastic deflection of the machinery and structure and/or in any energy absorbing devices provided for that purpose.
SKW	Skew Load	The loads developed due to trolley or gantry wheels rolling along a rail. The force shall be taken as acting

		normal to the rail and tending to skew the structure. The horizontal force shall be obtained by multiplying the vertical load on each wheel by a coefficient which depends upon the ratio of the span to wheel base. The coefficient shall be as determined by F.E.M. 1.001. If the Contractor demonstrates that the Trolley and/or Gantry skew load is less than the value shown because of either electrical or mechanical gantry drive control, then the reduced load may be used accordingly.
STL	Stall Torque Load	The load developed by stalling any motor in the Crane. The load shall be due to the stall and/or breakdown torque of AC drives. For the hoist stall conditions, total stall torque of all hoist motor(s) shall be assumed to be transferred to one set of rope falls.
TL	Trolley Load	The weight of the Trolley structure including all machinery and equipment permanently attached.
TRIM	Trim Load	The effect of plus or minus 5.0 degrees trim of the spreader.
WLO	Operating Wind Load	The load due to an operating wind pressure of 480 N/m2 (10.0 pounds per square ft) {equivalent to 28 m/s (62.6 mph) wind speed} assumed uniform over the full height of the Crane applied in the least favorable direction, including diagonal wind. **The Crane shall be designed structurally for an operating wind speed of 28 m/s (62.6 mph), but wind tunnel testing shall be performed at operating wind speeds of 20.1 m/s (45 mph) and 28 m/s (62.6 mph) as indicated in Section 3.28.**
WLS	Stowed Wind Load	The load due to a stowed base wind speed of 65.2m/s (146 mph) minimum but no less than the latest edition of the Florida Building Code. The wind force shall be considered to be acting in the least favorable direction, including diagonal wind and the basic pressure to be acting in accordance with F.E.M. 1.001. Stowed wind load shall use the specified 65.2m/s (146 mph) wind beginning at ground level and prorated upward as per FEM (2.2.4.1.2.2)

3.10 LOAD CASES

3.10.1 Load cases and/or load combinations shall be computed in accordance with FEM. All load cases shall be analyzed on the following basis:

(a) Boom shall be in the most adverse position.
(b) Trolley Load (T) and Lifted Load (LL) shall be in the adverse position.
(c) Lateral Loads shall be in the most adverse direction.
(d) Wind (W) shall be from the most adverse direction.

3.10.2 Analysis of all load cases shall use the safety factors as defined in FEM or the stability factors specified earlier.

3.10.3 Detail loading conditions submittal shall be provided with the technical proposal.

3.10.4 The stability factors of the Technical Specification shall govern.

3.11 GANTRY TRUCKS

3.11.1 The gantry trucks shall be designed and fabricated with a maximum bumper-to-bumper distance of 27 m (88'6").

3.12 LADDERS, STAIRWAYS, CATWALKS, AND PLATFORMS

3.12.1 Ladders (external and internal), stairways, catwalks, and platforms shall be constructed of steel and shall be provided to give proper access to all parts and areas to which access is required for the Crane's operation, lubrication, service, maintenance and inspection.

3.12.2 Stairways shall be used wherever possible in preference to ladders with the exception of internal ladders. All maintenance locations shall have suitable platforms.

3.12.3 Ladders, stairways, catwalks, and platforms, guard rails (hand rails) and cages shall meet all requirements of OSHA and be galvanized and painted. Galvanized walking surfaces need not be painted.

3.12.4 Access from the wharf surface to the Crane shall be in the vicinity of the landside crane rail. Ladders, stairways, catwalks, and platforms shall be so located as to not reduce critical clearance dimensions, and to minimize chance of damage from trucks and equipment working in the vicinity of the crane (s).

3.12.5 Stairways (stair threads), catwalk floors, and platforms floors shall consist of either bar grating, or "Grip Strut". Floor of trolley, electric house, and machinery (boom hoist) house shall be 4- way safety diamond plates with a nominal thickness of ¼ inch. Grating shall not be installed on these floor surfaces with the exception of the E-house.

3.13 GANTRY SECURING DEVICES

3.13.1 The Crane(s) shall be designed and equipped with stowage pins (for horizontal forces) and tie downs (for uplift forces for hurricane wind as specified herein) as gantry securing devices.

3.14 STOWAGE PINS

3.14.1 Stowage pins will be engaged when the crane is stowed. The stowage pins shall mate with existing sockets embedded in the Port of Miami dock; see attached dock interface drawing included in Section 9 of the Specification.

3.14.2 Stowage pins engagement mechanism shall be designed for ease of manual operation by one workman and shall require a force of no more than 50 pounds to disengage. A mechanical lock shall be provided to maintain each pin in the engaged and raised positions. An electrical fault interlock shall be provided by use of limit switch.

3.14.3 The stowage pins shall be designed to withstand the stowed wind force on the crane without brake assistance. These pins shall be designed for the existing sockets on the wharf.

3.15 HURRICANE TIE DOWNS

3.15.1 Stowed wind tie down links will be engaged when the Crane(s) is stowed and shall mate with the existing tie down links currently installed on the wharf.

3.15.2 The stowed wind tie down links shall consist of forged steel ratchet turnbuckles mounted on the gantry frame at each corner (not on the gantry trucks or equalizer beams) and shall be attached to tie down links embedded in the dock. When not in use, turnbuckles shall hang from the crane in the exact location required to mate with below ground links. The mechanism used to support the tie down links while not in use, must be adjustable to allow for alignment adjustments while connecting to underground links.

3.15.3 Adequate space shall be provided between the turnbuckles and the gantry truck frame when all links are connected to permit the maintenance technicians to tighten the turnbuckle without obstruction.

3.15.4 Details of existing tie downs are provided in Section 9 of these Specifications. The Manufacturer shall provide the Cranes' rail loads for approval of the Cranes' design.

3.16 MISCELLANEOUS REQUIREMENTS

3.16.1 Minimum thickness of plates for primary structural members shall not be less than 5/16 inches or 8 millimeters.

3.16.2 Pins shall not be used to resist reversing forces during normal operations.

3.16.3 Back to back members in contact or within 2 inches (50 mm) or less of each other are not permitted.

3.16.4 Built up members and latticed members shall be avoided and any use of these type members shall be specifically approved by the County.

3.16.5 Water pockets are not permitted. If a water pocket cannot be avoided, it shall be equipped with a drain hole not less than one (1) inch in diameter. Drain holes shall be machine drilled, not be burned.

3.16.6 All members shall have continuous flange to web welds.

3.16.7 "Local" structural members that support hoisting equipment or other machinery shall be designed for the impact and vibration loads that occur in those areas.

3.16.8 Weather-tight manhole openings with bolted, gasketed steel covers shall be provided to allow access to the interior of all box girders that are not hermetically sealed.

3.16.9 All plate edges shall be ground to a radius sufficient to eliminate burrs and to allow coatings to adhere to the edge of the plate.

3.16.10 Bolts may be tightened by a standard method to the required tension. Bolt tension may be checked at locations selected by the County. Checking of bolt tension shall be done by the Contractor in the presence of the Inspector and in such a manner that the Inspector can read the torque wrench gauge of direct tension indicator during checking.

3.16.11 The County Representative shall have free access at all times to any portion of the fabrication site where work is being performed.

3.17 ENCLOSURES (GENERAL)

3.17.1 This section shall govern the design, fabrication and installation of the enclosures to be provided on the Crane(s) which Works shall conform to the applicable standards and requirements herein and those of the FBC, AISC and any other applicable code and standards.

3.17.2 Two (2) types of waterproof habitable enclosures shall be provided on the crane; a House Enclosure and Cabins.

(a) House Enclosure; a single Machinery House enclosure shall be provided for the Main Hoist machinery, Boom Hoist machinery, Main Trolley drive machinery, Electrical switchgear, Drive and Control Room.
(b) Cabins: two (2) different types of cabins shall be provided; air conditioned and non air conditioned. Each cabin shall be walk-in type, totally enclosed, insulated, and air conditioned;

(1) air conditioned; Operator's Cabin, and a Dock Level Monitoring Station.
(2) non air conditioned: Boom Hoist Operator's cabin.

3.17.3 Enclosures shall be of sufficient size to enclose and protect all of the mechanical, hydraulic and electrical equipment located therein.

3.17.4 Enclosures shall be of steel construction; minimum grade not less than A36, and shall be designed to comply with FBC minimum load requirements.

3.17.5 Enclosures walls and support framing shall be designed to carry, at a minimum 195.3 kgf/m² (40 lbs./sq. ft.) positive wind pressure on the windward side, and 146.5 kgf/m² (30 lbs./sq. ft.) negative wind pressure (vacuum) on the leeward side. Vibrations caused during normal operations shall be considered in the design.

3.17.6 Enclosure roofs shall be designed to carry at a minimum 244.1 kgf/m² (50 lbs/sq. ft.) live load plus dead load or 146.5 kgf/m² (30 lbs/sq. ft) negative (vacuum) wind pressure less dead load. For the 244.1 kgf/m² (50 lbs/sq.ft) live load plus dead load case, analyze on the basis of normal allowable stresses for static loads. Total roof deflection for live load shall not exceed 1/150 of the span.

3.17.7 Enclosures shall be suitably framed and of sufficient strength for required service and loadings.

3.17.8 Enclosures subfloor framing shall be of sufficient strength to support floor loads (live loads); weight of the flooring system; weight of all permanently installed machinery and equipment; live loads, impact, and vibrations imparted by machinery and equipment, weight of machinery house enclosure and all appurtenances, and wind loads, all as specified.

3.17.9 Access doors shall be provided in the siding with weathertight seals, complete with automatic closer and latching devices. Doors and window frames shall be weather sealed to walls. Doors and windows shall have approved weather stripping. All access doors, interior and exterior shall have an approved self closing lever lockset and a separate Padlockable Barrel Slide Bolt. All doors shall be steel, 36 inches wide and hinged with safety glass in the upper panel. Door hardware shall be brass or stainless steel. Drip shields shall be provided over doors.

3.17.10 Provide access ladder to roof with protective cage and railing as required by applicable safety codes. Pad eyes in compliance with OSHA requirements shall be installed at the roof and on access ladders for workers to secure a safety line. Safety railings shall be installed on the roofs that require access for maintenance of Crane components.

3.17.11 There shall be no wire rope penetrations or penetration of any kind in the house enclosure roof and/or ceiling. Penetrations in the house enclosure walls (such as doors and windows) shall be equipped with drip guards.

3.17.12 The roof shall be constructed of stiff trapezoidal/corrugated steel sheathing properly sloped to permit water to run off. The roof shall be sloped a minimum of 1 on 12 slope to shed water and no greater than a 1 on 8 slope. The roof shall extend at least 50mm (2 inches) beyond walls, or shall be bent downwards and lapped over walls. House walls shall extend below house floor to prevent water intrusion.

3.17.13 The enclosures shall be constructed of stiff trapezoidal/corrugated steel sheathing; house walls and roof deck shall be gauge 5 mm (.196 inches) thick minimum sandblasted and painted. Roof and wall joints shall be sealed by welding, no other method is permitted.

3.17.14 Structural framing members for enclosures shall be open H, C or I Sections. Enclosed tubular members shall be used only with County approval.

3.17.15 No rivet construction and/or attachments are permitted.

3.17.16 Enclosures shall have lighting and convenience outlets as required by applicable codes.

3.17.17 Enclosures shall be equipped with doors, with self closing Padlockable Barrel Slide Boltskeyed lock mechanisms, hurricane use windows, roof hatch, floor hatch, ventilation, insulation, exhaust fan, louvers, climate control, fire extinguisher, lighting and electric outlets, computer installation, e-house operator table and chair, and intercommunications, all in accordance with the design requirements of house enclosures.

3.17.18 All exterior welds shall be continuous. Bolted section joints shall be seal welded in assembly.

3.18 MACHINERY HOUSE

3.18.1 A weathertight Machinery House, aesthetically appealing, constructed of steel as specified herein , shall be provided on the Crane(s) which house shall be divided into two (2) individually structured rooms; the Machinery Room and the E-house (Electrical Room). The Machinery Room is to enclose all machinery for the Main Hoist, Main Trolley, Boom Hoist, Electrical switchgear, main transformers and miscellaneous equipment as required herein. The second room, the E-House is to enclose the Crane Drive System and Controls.

3.18.2 The Machinery House shall be constructed on a single rigid base frame capable of supporting and integrating the Machinery and E-house separated by rigid walls which construction shall comply with the applicable standards and codes. Special attention shall be given to insulation and compliance with the NFPA and other applicable codes and standards.

(a) Machinery Room:

(1) The Machinery Room platform shall be sufficiently stiff to prevent machinery misalignment due to dead load, live load, wind and other forces causing deflections. The Main Machinery House shall have vertical height sufficient so the Overhead Service Crane can hoist and handle any piece of machinery or components therein or on the trolley and move it to the access hatch without disassembly and lower it to dock level. The Overhead Service Crane shall be provided in accordance with the specification as herein stated.

(2) A roll-out access hatch shall be provided in the Machinery House deck, sized to permit removal, without dismantling, of the largest piece of equipment within the house, by means of an overhead service crane as required herein. The access hatch shall also provide access to the Main and Catenary Trolleys. A smaller access hatch shall also be provided for handling small equipment and tools. Other separate hatch may be provided as required upon submittal and approval by the County.

(3) The access hatches shall be mounted on tracks with rollers so they can be rolled back manually by use of overhead service crane. A latching device shall be furnished for the open and closed positions. Socketed removable stanchions with safety chains shall be provided around the hatch openings. The house structure, sides and roof shall be designed to accept the overhead service crane and rails. The roof shall be sloped and shall provide handrails at the roof edges for personnel safety while working on the roof. A ladder to gain access to the roof shall be provided. Platforms shall be provided around all sides of the Machinery House. A waterproof 36 inch wide steel door with locks and safety glass windows in the upper panel shall be provided in the two (2) side walls of the Machinery House.

(4) The Machinery House shall be pressurized with filtered air by a suitable blower and hurricane wind resistant manual louvers arranged to prevent the entry of rain water from tropical storms and hurricanes. The blower size selected shall be of sufficient capacity to change the air in the Machinery House as required by applicable codes to include ASHREA. The Machinery House shall be adequately ventilated to maintain a maximum temperature of 5 degrees above ambient under working condition defined in Section 2.5.

(5) The Boom Hoist lead line shall be so arranged to penetrate the wall of the Machinery Room. The opening shall be shrouded with neoprene rubber flaps to minimize water penetration or a system as approved by the County.

(6) A sign shall be posted at all access doors to the Machinery House indicating: "KEEP DOOR CLOSED WHEN MACHINERY IS IN OPERATION", written in English.

(b) E-House (Drive and Controls Room):

(1) A separate air-conditioned enclosure (room) within the Machinery House shall be provided for the electrical and control equipment. This enclosure shall be separated from the rest of the Main Machinery House by a steel wall. Two (2) doors shall be provided at both ends of this wall to allow access between the two (2) areas, the E-House and the Machinery Room. No access shall be provided to the exterior of the main structure.

(2) The walls of this enclosure (E-House) shall be double wall construction with sound and thermal insulation between the double layers. The floor shall be raised to allow for a crawl space and ventilation of all electrical panels. A continuous rubber mat, with a minimum thickness of 12mm shall be provided where possible.

(3) The E-House shall be separated into separate rooms by a similar wall used to separate the E-House from the Machinery Room. One room shall be the Control Room and the other the Drives Room which shall house all the Drives panels, PLC and other electrical appurtenances.

(4) The Control Room shall have a desk, chair, and storage cabinet to house all of the Crane's maintenance and operations manuals and for any other maintenance use. The walls between the Control Room and Machinery Room and Drives Room shall be provided with windows to allow full viewing of both rooms.

(5) The Control and Drives Rooms shall have independent air conditioner systems as required herein.

(6) The roof of the E-House shall not be higher than what is the minimal required height for the equipment within. This roof/ceiling enclosure shall be designed for 0.5 t/m2 loading to allow for storage on top.

(7) The layout of electrical equipment shall provide adequate space and access for all required equipment as well as for all future equipment necessary for full crane automation.

(8) No heat-producing elements, such as large resistor assemblies, shall be located in the Machinery House or E-House rooms(Control or Drives).

(9) A minimum safe working space in accordance with applicable codes shall be provided around all equipment for inspection and maintenance

(10) Particular attention shall be paid to provide ease of access to all equipment for inspection, maintenance, replacement and/or repair.

3.19 OVERHEAD SERVICE CRANE

An overhead service crane shall be provided in the Machinery House with an electrically powered bridge, trolley and hoist. The lowering of equipment to the ground will be through hatches provided in the floor. The overhead service crane shall have adequate height to remove any piece of equipment in the Machinery House and move it to one of the service hatches. In addition, the overhead service crane shall have adequate lift height to place the hook block on the dock.

3.19.1 The service crane shall be to CMAA Specifications Class A1, or equivalent. The bridge, trolley travel and hoist motions shall be powered and operated from a pendant control. The hoists

shall have sufficient spooling capacity and wire rope to reach the top of the dock. Hook coverage shall be provided for all major equipment in the house.

3.19.2 The service crane shall be of the overhead electric powered, under-running type spanning inside the house and capable of centering over, hoisting, traveling, and lowering to the dock surface, any piece of assembled equipment including that located on the trolley. A lifting beam, configured in a manner that will allow the hook to be centered over each piece of equipment, shall be furnished with appropriate slings to move all machinery within the house. The hoist, trolley, and bridge travel shall be electrically powered and the hoist shall be dual speed to accommodate fine positioning. The service crane shall be of standard manufacture and as approved County.

3.19.3 The service crane shall have adequate capacity for handling the heaviest piece of equipment. The Main Hoist reducer may be dismantled for removal from the Machinery House; but the vertical lift of the hoist shall be sufficient for the gearcase cover to clear the gears in the assembled position.

3.19.4 A maintenance platform shall be provided to interface with the maintenance hoist to facilitate access to all Machinery House light fixtures and ventilation system for maintenance and replacement. The service crane shall be stored at a convenient location within the Machinery House.

3.19.5 The service crane to be installed shall consist of, but not limited to, the following:

(a) Electric wire rope
(b) Standard I-beam mounting
(c) Motorized Bridge
(d) Motorized trolley
(e) Minimum of seven (7) Pushbutton pendant control; bridge forward, bridge reverse, trolley left, trolley right, hoist up, hoist down, stop
(f) Motorized Hoist withtwo (2) speed hoisting control

(g) Lifting capacity (minimum): 10 ton (20,000 lbs.)

(h) Speed of lift: 50 feet per minute (minimum high speed)
20 feet per minute (maximum slow speed)

3.20 MAIN TROLLEY AND CATENARY TROLLEYS STRUCTURE

3.20.1 The trolley frames shall be constructed of welded heavy steel plate and structural members and shall be sufficiently stiff to prevent misalignment and strong enough to carry all imposed loads.

3.20.2 The Main Trolley and Catenary (seaside and landside) Trolley frames shall have enough torsional flexibility to allow the individual wheel reactions to equalize and "share" the load. It shall be designed and installed in a manner that will prevent its de-mounting from the boom if derailment occurs.

3.20.3 The Main Trolley and Catenary (seaside and landside) Trolley frames shall be equipped with drop blocks and jacking pads so hydraulic jacks can be used at specific locations on the boom and main girder for lifting the trolley frame in order to dismount the travel wheels. The Main and Catenary Trolleys shall be capable of being completely lifted off the trolley rails by the jacks; all four corners simultaneously, WS or LS ends, or, left-side and right-side.

3.20.4 The Main Trolley and Catenary Trolleys (seaside and landside) shall consist of structural steel frame(s) supported by at least four (4) wheels riding on rails mounted to the crane girder and boom. Side guide rollers shall be provided for the main and catenary trolleys. Side rollers shall be located on the inside face of the trolley rails. Hold down rollers shall be provided as required. The Main Trolley shall have mounted on it the Main Hoist sheaves, and it shall support the Operator's Cab.

3.20.5 The Main and Catenary Trolley frames shall be designed in accordance with the requirements of Section 3 of this specification and any other applicable requirements.

3.20.6 The main trolley and cab shall be fully accessible at any point in the trolley's travel and access shall be such that a disabled operator can be removed without special rigging.

3.20.7 Except for rope openings, the main trolley shall be completely decked with grating and shall be enclosed with a hand railing and kick plates as required by applicable codes. All openings shall be curbed with kick plates with the required height. All areas, parts and components shall be safely accessible for maintenance and replacement.

3.21 OPERATOR'S CABIN (GENERAL)

3.21.1 A cabin shall be provided for the exclusive use of the crane operator. The primary consideration in the design of the cabin is for the safety, comfort and efficiency of the Crane operator. Special attention shall be given to minimizing noise, vibration and shock within the cabin. The cabin shall be hermetically sealed with adequate ventilation when the door and windows are closed as required by applicable codes.

3.21.2 The Operator's Cabin shall be equipped with, and shall meet at a minimum the following provisions:

(a) A rubber matted anti-slip floor surface for non-graded closed floors shall be provided.

(b) A metal door with robust (heavy duty) hinge, arranged for exterior locking and connecting to an exterior access platform. Locking device and handle shall be identical as for the other house enclosures.

(c) The Contractor shall comply with all International Standards, which have established ergonomic recommendations for the task required by the operator in a container crane operation. These recommendations are to be followed to provide reasonable protection based on studies regarding the musculoskeletal load, discomfort/pain and endurance/fatigue related to static working postures. The contractor is totally responsible for the design of the cranes, including the operators console and other areas related to the safe operation of the crane by and for the operation. Owner nor their engineer purport to be the design agent, and no consent or approval of Owner or their engineer shall relieve the contractor of its responsibility in this regard. Both the console and chair shall be submitted to Owner for review.

(d) An ergonomic operator's seat, fully adjustable, padded, with seat belt, floor mounted on a rotating pedestal, and meeting SAE J899 shall be provided as approved by County.

3.21.3 The size of the cabin shall be adequate for the operator and the equipment within, and shall allow ample space to permit convenient maintenance. Minimum size of cabin and passageways shall be as required by OSHA. Access to the operator's seat shall be provided without requiring the operator to climb over the seat back or controls. The operator's seat shall have the capability to rotate 180° clockwise and 90° counterclockwise from the front facing position.

3.21.4 All levers, handles, etc., used in controlling the functions of the Crane shall be arranged in a convenient position so as to enable the crane operator to manipulate and control all operations with minimum effort, strain, or chance of error. The console layout shall be similar as on the existing Port of Miami Cranes, see reference Console Layout drawing included in Section 9 of these Specifications.

3.21.5 All warnings system shall be audible within cabin at all times.

3.21.6 Materials treatment shall be as specified in Section 7.8 Surface Preparation and Painting.

3.21.7 The following items shall be provided;

(a) Garment (clothing) hook, NFPA compliant Fire Extinguisher, Address system and signaling horn.

(b) Minimum of two (2) 60 watt fluorescent lights and appropriate night (red light) lighting for night operation inside cab.

(c) Air conditioning unit

3.22 OPERATOR'S CABIN – VISIBILITY AND GLASS

3.22.1 The Operator's Cabin shall be of the panorama-view type and located and arranged so that the operator has full visibility of all crane operations when seated at the controls to include gantrying. A visibility diagram shall be furnished to the County for review and approval.

3.22.2 The centerline of the operator's seat shall be properly located with respect to the centerline of the spreader. The operator shall be as close as possible to the spreader alignment to see down into the ship's cells.

3.22.3 All window glass with the exception of floor mounted shall be laminated safety glass. All glass above the operator's horizon line (in the sitting position) mounted on the side of the cabin shall be tinted as approved by County.

3.22.4 Glass in the floor of the cabin shall be laminated a minimum of 30 mm (1.18 inch) thick armor glass (without wire mesh reinforcing) and shall be un-tinted. A 5 mm replaceable tempered top cover glass shall be provided to protect the 30 mm glass from scratching and mechanical damage.

3.22.5 There shall be sufficient visibility to the sides so that the operator can safely perform gantry travel, especially when working close to other Cranes and equipment. The visibility shall be sufficient for the operator to have a clear direct view of all four (4) gantry bumper areas and trucks when the trolley is located at any location immediately behind the boom hinge point to the farthest location at backreach.

3.22.6 Those windows in the front, sides and floor of the cabin surrounding the operator shall be arranged with the minimum amount of framing required to maintain the specified structural integrity while providing maximum visibility and complies with hurricane wind force conditions as required by applicable copes.

3.22.7 The upper window on both sides of the cab shall be so equipped that they can be opened for ventilation. The window locking mechanism shall be of robust structure as approved by County.

3.22.8 A suitable defogging system shall be provided for the lower front and floor mounted windows. This defogging system shall be suitable for the full range of environmental conditions existing at the Port of Miami.

3.22.9 Bottom window(s) shall hinge up into the cabin for cleaning accessibility.

3.23 OPERATOR'S CABIN – MOUNTING AND ACCESS

3.23.1 The Operator's Cabin shall be mounted on the Trolley. Access to the Operator's Cabin shall be convenient and safe for the operator.

3.23.2 Access to the Operator's Cabin from the Trolley deck shall be provided.

3.23.3 The normal route for access to the Trolley and Operator's Cabin shall be located at the Trolley stowed position.

3.23.4 The Trolley and Operator's Cabin shall permit safe emergency egress from any location on the boom. All access to the Operator's Cabin shall fully comply with OSHA.

3.24 OPERATOR'S CABIN – STRUCTURAL

3.24.1 Structural supports for Operator's Cabin shall be designed for minimum of 100 lbs/sq. ft. uniform load on Cabin floor, weight of permanently installed equipment, weight of the Cabin with appurtenances, and weight of structural support; at AISC allowable stresses or equivalent.

3.24.2 For the storm wind case, add as a minimum, 40 lbs/sq. ft. negative wind pressure (vacuum) on the leeward side to the above loads. All wind loading design criteria shall conform to FBC.

3.24.3 Operator's Cabin enclosure shall be constructed of plate steel. The sides, floor and roof steel plate of the cabin shall be of a minimum of ¼ inch thick (6 mm). The Cabin shall be fully insulated.

3.24.4 Operator's Cabin shall be weatherproof designed in accordance with ASHRAE and all other applicable codes. All roof and wall joints shall be sealed by welding. .

3.24.5 Operator's Cabin shall be of fire retardant construction.

3.25 OPERATOR'S CABIN – WINDOW WASHING PLATFORMS

3.25.1 A platform, suitable for exterior maintenance and window washing of the Operator's Cabin shall be provided at the extreme backreach of the Crane(s). This platform shall not obstruct the operation of the Trolley, festoon, hoisting ropes, or spreader; nor shall it interfere with any Crane function in the specified operating ranges.

3.25.2 This platform and all access to this platform shall comply with OSHA. The platform shall be accessible from the festoon platform. The platform shall be designed, fabricated and installed in a manner such that deflection and movement of the platform does not affect the balance of maintenance personnel standing on the platform and working on the Operator's Cabin.

3.25.3 The platform shall be constructed to allow complete access of the Operator's Cabin when Trolley is in its farthest backreach position. It shall be designed in a manner to have adequate clearance from the bottom of the Operator's Cabin to the floor surface of the platform for cleaning of bottom surface of cabin. The platform shall fully cover the bottom of the Cabin when in the backreach and extending beyond the cabin's wall to allow for cleaning and maintenance. A removable railing shall be installed on the WS of the platform to permit cabin and Trolley travel. The flooring shall comply with the specifications of Section 3.11.

3.26 TROLLEY RAIL

3.26.1 The Trolley rails shall be constructed of an appropriately sized Din 536 or County approved equivalent crane rail continuously welded end-to-end and mounted onto the sides of the boom and main girder. The rail shall be heat treated to 321 – 388 BHN. All rail alignment criteria must be followed to avoid Trolley wheel wear and tracking problems.

3.26.2 The Short Rail Piece at the hinged point shall not be less than fifteen (15) feet long fabricated from solid steel bar stock of the same material and specificationsas the trolley rails. The steel bar shall be machined to match the stock rail provided. The web area shall not be machined and left as a square piece with the exception of the end to be welded to the stock rail.

3.26.3 The rail joint at boom hinge of the short rail shall be lapped, or otherwise designed to allow smooth Trolley wheel travel over the transition point of one end to the other. Care shall be taken to prevent this rail joint from binding due to rail creep or thermal expansion. Rail joint

design at the boom hinge point shall be submitted for the County's approval prior to start of fabrication.

3.26.4 The rail shall be attached to the boom by a Gantrex type system with rubber reinforced rail pads or County approved equal. A stainless steel shim plate shall be provided under the Short Rails at the boom hinge in place of the rubber pad and it shall extend no less than 0.61 m (2 feet) beyond the end of the short rail where it is welded to the stock rail.

3.26.5 Adequate rail clips and shear bars shall be provided to locate the Trolley rails laterally on the rail bed. The expected high lateral and impact loads of the Trolley shall be considered in the rail clip selection. The rail clip design, spacing, and means of attachment to the rail bed shall be submitted to the County for review and approval prior to fabrication.

3.26.6 The Short Rail pieces shall be bolted to the rail bed structure. Especial attention shall be given to the union of the shim plates and the rubber rail pads. The stainless steel shim plates are to be slightly tapered at the ends adjoining the rubber rail pads.

3.27 MATERIALS

3.27.1 Structural steel (plates, shapes or bars) shall be classified as follows:

3.27.2

Classification	ASTM Designation
Fracture Critical Members (FCM)	A709-XXF
Non-Fracture Critical Members (NFCM)	A709-XXT

(a) The term XX indicated the appropriate value required by the design
(b) The temperature zone shall be Zone 1 per ASTM A709-09, Table 7.
(c) Material that was not originally manufactured to the ASTM A709 specification requirements, such as ASTM A36 steel, may be used provided it meets all of the specified requirements for A709 material, including toughness.

3.27.3 Supplemental Requirements: In accordance with ASTM A709 High Grade, the following shall be complied with:

(a) Frequency of impact and tension tests; shall be in accordance with the complete section
(b) Weld repair
(c) Charpy V-Notch Impact Tests; shall be in compliance with the complete section.
(d) CVN test bars shall be oriented in the appropriate direction for the potential fatigue crack (longitudinal or transverse). The responsible structural engineer shall determine the appropriate direction.

3.27.4 The Contractor's Structural Engineer shall determine which member or member component is in the FCM category. All FCM's shall be identified on the drawings. FCM's shall be accessible for periodic structural inspections. Non-fracture critical members shall be accessible where practical.

3.27.5 Structural steel may be inspected at the fabrication site by the County or his representative. The Contractor shall notify the County where materials have been delivered to the fabrication site and shall give the County at least 10 days notice before commencing the fabrication of any structural steel.

3.27.6 The Contractor shall furnish to the County a copy of all mill orders, certified mill test reports and Charpy V-Notch Test reports for all structural steel to be used in the work other than unidentifiable stock material. Copies of mill order shall be furnished at the time orders are place with the manufacturer. Certified mill test reports shall be correlated and furnished prior to the start of fabrication of material covered by these reports. Before the start of fabrication, the County shall have the opportunity to advice of any exceptions.

3.27.7 The Contractor shall maintain material traceability for structural steel from the prime mill source through all manufacturing processed to and including each finished part. For these items the original mill test reports and certificates for supplementary processes and tests shall be furnished as required by the County.

3.27.8 Specialty steels such as stainless steel, aluminum, etc., shall be of the highest quality type grade available, shall be suitable for exposure to the marine environment and temperatures of the South Florida, USA area. Prior to the Contractor's procurement of any specialty steel items, parts and components, the Contractor shall provide a submittal for said items, to the County for review and concurrence of material composition and supplier. Stainless steel shall be no less then type 316.

3.28 STRUCTURAL MAINTENANCE

3.28.1 The Contractor shall provide recommendations for a Structural Maintenance Program. This program shall include inspection intervals, locations, and procedures, reporting procedures, repair procedures, and a detailed description of the methods used to determine inspection intervals.

3.28.2 The program shall have a rational basis utilizing fracture mechanics principles.

3.28.3 The program shall be included in the maintenance and inspection manual.

3.28.4 The Contractor's Structural Engineer shall review the program and certify in writing that the program was reviewed and is satisfactory.

3.28.5 The Contractor shall provide either of portable or permanent access ladders and platforms at all inspection locations described in the Contractor's Structural Maintenance Program. Access for inspection shall be provided to all critical areas of the structure and must meet applicable safety laws and regulations and be submitted to the County for review.

3.29 AS-BUILT WHEEL LOAD TEST / VERIFICATION

3.29.1 The Contractor shall verify that the Crane as-built wheel loads, in the Boom up and Boom down conditions, comply with the specified maximum dock/rail loads prior to shipment of the crane from the Fabrication Site. If any modifications are made to the Crane(s) after the Fabrication Site weight verification, the Crane weight shall be verified again prior to final load certification at the Erection Site. Verification shall be accomplished by jacking all wheels (together) on the waterside corners until they are clear of the rails and determining the wheel loads by means of a calibrated load cell or hydraulic jacking system. This procedure will be repeated for the landside wheels, jacking all wheels together. The weight measurements shall be repeated a minimum of three (3) times. Additionally, a separate procedure shall be provided to measure of the weight of Trolley with Operator Cabin and all equipment required for normal operation. The Trolley weight measurement shall be submitted to the County for review prior to installing the Trolley on the Trolley rails.

3.29.2 The Contractor shall submit a written test procedure for County's review at least six (6) weeks prior to testing and a written report of the results. (See Section 7.9.13, "Corner Load Measurement") The as-built wheel loads are to be verified prior to operating the Crane with the Trolley outside the legs.

3.29.3 If the results of this testing reveal that the as-built condition of the Crane does not comply with the specified structural, mechanical or electrical standards as set forth by these Specifications, or if the maximum dock/rail loadings are exceeded, it shall be the responsibility of the Contractor to make any necessary changes to the Crane to assure it is compliance. Any proposed corrective action must be provided in writing to County for review prior to implementation at the manufacturing facility.

3.30 WIND TUNNEL TEST

3.30.1 The Contractor shall make a suitable scale model of the container Crane(s) to be tested at an approved laboratory with boundary layer wind tunnel capabilities. The test results shall be used to confirm the Contractor's computed wind loading for wheel load, tie down and stability calculations. The test results shall be available at the earliest possible date, but no later than six (6) months from the Notice to Proceed and prior to start of any fabrication. The model shall include aerodynamically equal surfaces for the walks, ladders, and other secondary details as a minimum requirement. The cost of the model, test and report, complete, shall be included in the Contract Price.

3.30.2 The container size shall be assumed to be 9'-6" high by 8' - 0" wide by 45' - 0" long.

3.30.3 Results shall be determined for the boom in both the operating and the stowed positions and with the trolley located in critical positions with and without load. Test shall be made with the model positioned at increments not more than 15° through 360° rotation.

3.30.4 Testing for normal operation shall be based on wind speeds of 20.1 meters per second (45.0 mph) and 28 meters per second (62.6 mph). Testing for the stowed condition shall be based on 65.2 meters per second (146 mph) wind speed.

3.30.5 In order to obtain reactions due to frame warping, the model shall be reasonably structurally similar to the prototype.

3.30.6 After completion of testing, the model shall be painted and logo's added such that it is a replica of the actual crane and will be used for display purposes at the Port of Miami (POM). The scale model shall become the property of the County and shall be shipped to the County.

SECTION 4

MECHANICAL SPECIFICATIONS

This page has been left intentionally blank.

SECTION 4 - MECHANICAL SPECIFICATIONS

4.1 GENERAL

4.1.1 The Crane(s) shall have the following basic operating modes: general cargo hook, heavy lift, normal containers and rope reeving maintenance. All motion functions shall be instantaneous with no more than a one-second-turnaround time. Simultaneous movements shall be only with use of main hoist and trolley, and, gantry and trolley. No other simultaneous movements shall be permitted or required.

4.1.2 All machinery shall be designed in accordance with the best practice in mechanical engineering and in compliance with all applicable codes and standards required herein. In addition, the mechanical parts and components shall be designed to withstand all possible loading combinations with the appropriate durability and safety factors. In designing the mechanisms and components, careful consideration shall be given not only to fatigue failure, but also to harmful vibrations and deformations. It shall be the Contractor's responsibility to dimension, design and detail the Crane(s) to have them function properly in accordance with all requirements herein. The Contractor may offer alternate methods to provide the same function, provided they meet these specification and satisfy the intended reliability, maintainability and as approved by the County . The Contractor shall be responsible for providing adequate sizes and capability of all equipment to accomplish the work specified at the rated capacities, speeds, and duty ratings.

4.1.3 Minimum acceptable duty ratings for the Crane's main drives (including power conversion units and motors) are:

Main Hoist:	Continuous
Main Trolley Travel:	Continuous
Catenary Trolley Travel	Continuous
Gantry Travel:	60 minutes
Boom Hoist:	Continuous

4.1.4 All machinery and electrical components shall be furnished with lifting lugs suitable for attaching slings or other fittings for lifting.

4.1.5 The drive mechanisms shall be designed according to the following FEM classifications:

DRIVE	STATE OF LOADING	CLASS OF OPERATION	CLASSIFICATION	MINIMUM LIFE
Main hoist	L3	T8	M8	50,000 hrs
Main Trolley	L3	T8	M8	50,000 hrs
Cat Trolley	L3	T8	M8	50,000 hrs
Gantry	L2	T6	M6	12,500 hrs
Boom	L2	T5	M5	6,300 hrs

4.1.6 Classifications of individual structural and mechanical components shall be consistent with classification of the structure or mechanism containing the components.

4.1.7 The fleet angles of wire ropes shall not exceed the following:

(1) To drums, the angle to the axis of the drum grooving at the point of tangency 2.5 Degrees

(2) To sheaves with fleet angle or where the varying angle does not pass through zero degrees near the midpoint of travel..... 2.5 Degrees

(3) To sheaves with fleet angle varying approximately equally either side of zero degrees during normal travel ..... 3.0 Degrees

(4) The fleet angle between trolley and headblock sheaves may exceed 3 degrees when the headblock is within 3 m of its highest position, but shall not exceed 3.5 degrees.

4.1.8 Fleeting sheaves shall not be used.

4.1.9 When the sheave axles are not mounted in a horizontal plane, running wire rope shall be supported by auxiliary sheaves of appropriate size to prevent the wire rope from jumping off the main sheaves and drums.

4.1.10 Main Hoist ropes shall be continuous from the drum through the Main Trolley, Catenary Trolley and Headblock, to the end sheaves and back to the drum. Both ends of each hoist rope shall be secured to the drum to facilitate re-reeving. The Main Hoist wire ropes shall be supported by Catenary trolleys to eliminate the adverse effects of wire rope sag and bounce. Each Main Trolley rope and Catenary Trolley rope where applicable, shall run continuously from the drum(s) through equalizer sheaves and adjustable rope clamps on the Main and Catenary Trolleys and back to the drum(s) to facilitate adjustment and re-reeving of the ropes. A suitable wire rope tensioning system shall be provided in the backreach area for Main and Catenary Trolley travel ropes. The Main and Catenary trolley travel ropes shall also be supported to eliminate the adverse effects of wire rope sag. The two (2) independent ropes for the boom hoist shall lead from the drum to the gantry frame top, then to a multi-part reeve-up between the boom and the gantry frame top. The dead ends of the reeve-up shall be independent but equalized.

4.1.11 Replaceable Teflon buffers shall be provided as necessary to prevent bouncing running wire rope from contacting structural members. Rollers with factory lubricated and sealed anti-friction bearings shall be a non-metallic material with a life equal to that of the roller bearings.

4.1.12 The effect and direction of wind and of wind speeds to 28 m/sec shall be considered for operation and necessary clearances for the festoon systems and wire rope. Under no condition shall there be any chance of interference between the festoon systems and part of the Crane(s) wire ropes, etc.

4.1.13 Wherever possible, designs and layout of equipment shall allow performance of routine maintenance procedures by one man. The Crane shall conform to applicable safety regulations noted in Section 4.5.

4.1.14 A transparent and removable grease shield shall be provided between the wire rope drum(s) and nearby equipment (motors, brakes, etc.).

4.1.15 All major machinery and electrical components shall be furnished with lifting lugs for ease of attaching hoist gear when components are changed with the machinery house service crane. The proposals shall include a description of the method to be used to service machinery house and trolley equipment.

4.1.16 Bolts shall be properly torqued and shall not be subjected to fluctuation stresses. Pins shall not be used to resist reversing forces.

4.1.17 All major machinery and electrical components shall be furnished with identification tags complete with all parameters, serial number, year of manufacture, and contract information.

4.1.18 The Crane(s) shall be rope towed trolley type with Main Trolley and Catenary Trolleys on seaside and landside. The Main Trolley shall be rope driven by drive machinery located in the Machinery House. The Catenary Trolleys shall be towed by the Main Trolley. During boom down operation, the Catenary Trolleys (seaside and landside) shall maintain position half way between the Main Trolley and their respective end stops at the boom tip and in the backreach. With boom up, the Main Trolley shall be able to traverse the length of the Main Girder (from the waterside to the back reach) at slow speed with empty spreader for maintenance purpose only. For boom up operation, end stops shall be provided at the boom hinge to stop the seaside Catenary Trolley and Main Trolley from traveling beyond the end of the trolley girders.

These stops will only be deployed during boom up operation and normal end of travel slow down and over travel limit switches shall also be provided.

4.2 STANDARDS

4.2.1 The current standards of the following organizations shall govern and will be used for design fabricate, manufacture, install and operate the mechanical equipment. Foreign standards, if more restrictive, may be used as approved by the County.

(1) AFBMA Anti-Friction Bearing Manufacturers Association
(2) AGMA American Gear manufacturer's Association
(3) AISE Association of Iron and Steel Engineers
(4) AISI American Iron and Steel Institute
(5) ANSI American National Standards Institute (American Society of Mechanical Engineers)
(6) ASHRAE American Society of Heating, Refrigerating and Air Conditioning Engineers
(7) ASM American Society for Metals
(8) ASME American Society of Mechanical Engineers
(9) AWS American Welding Society
(10) CBBI Cast Bronze Bearing Manufacturers Institute
(11) CMAA Crane Manufacturers and Association of America
(12) DIN Deutsches Institut für Normung e.V. (German Institute for Standardization)
(13) FEM Federation Europeenne de la Manutention
(14) ISO International Standards Organization
(15) JIC Joint Industrial Council
(16) NFPA National Fire Protection Association
(17) NFPA National Fluid Power Association
(18) OSHA Occupational Safety and Health Administration
(19) SMACNA Sheet Metal and Air Conditioning Contractors' National Association
(20) SAE Society of Automotive Engineers

4.3 MISCELLANEOUS REQUIREMENTS

4.3.1 All parts of the mechanical equipment shall be designed so that they may be easily assembled, adjusted, removed for replacement, accessible for lubrication, inspection and maintenance. Where necessary for accessibility, permanent platforms, catwalks, handrails and ladders shall be provided.

4.3.2 All areas where there is exposed rotating machinery and all other "pinch points" shall be guarded in accordance with OSHA.

4.3.3 Fastenings shall be secured with locking devices. Critical areas, such as trolley wheel keeper plates, shall have fastener groups wired together. Lock nuts, lock washers, set screws and snap rings are unacceptable on rotating equipment. All fastenings ½" diameter and less shall be stainless steel. If it can be shown that the use of stainless steel fasteners will compromise the design of a proprietary manufactured product which otherwise meets the specifications, then alternate means of preventing corrosion and seizing of the fastener may be used as approved by County.

4.3.4 All hydraulic pistons and rods provided shall have Type 317 or better stainless steel components available. Contractor shall provide a submittal for the County's review and concurrence.

4.3.5 Hubs for brake wheels or discs shall be pressed and keyed directly to their respective shaft. Brake wheel couplings shall not be used unless the brake wheel is the rigid half and directly secured to the reducer high speed shaft.

4.3.6 All equipment or groups of equipment shall be independently mounted on rigid subframes or mounted directly to the crane's structural frame. Machined support pads (base plates) shall be 25 mm (1") wider than the footpads of the equipment on all sides. The mounting of bases

shall be designed to isolate machinery elements from dynamic deflections of the crane's structure. A minimum of 3.0 mm (.125") stainless steel shims shall be provided under electric motors for alignment and to accommodate shaft height variations of spare motors.

4.3.7 In the case of machined assemblies or weldments such as subframes, trolley frame, travel trucks, sheave assemblies, etc., the following shall apply:

(1) All milled surfaces shall be flat, true, and parallel to other milled surfaces,
(2) All pin and axle holes shall be line bored,
(3) All pin and axle holes shall be true, parallel to each other (or at exact right angles, as the case may require), and located at the proper distance from the other holes.

4.3.8 Alignment of equipment shall be maintained by the use of body fit bolts, dowel pins, shear bars, and/or jack screws as required by application.

4.3.9 Major machinery and electrical components shall be furnished with lifting lugs suitable for attaching slings or other fittings for lifting.

4.3.10 A minimum space as required by OSHA any other applicable standard shall be provided around rotating equipment for the safety of personnel. Floor openings around equipment shall have minimum clearance and shall have toe plates in accordance with applicable OSHA regulations.

4.3.11 Prior to commissioning and testing at the manufacturing and assembly facility of the Contractor, all machinery and rotating equipment shall be properly installed, laser aligned, free running without noise or vibration. The Contractor shall confirm these requirements at the Port of Miami, prior to final acceptance by the County.

4.4 NOISE LEVELS

4.4.1 Noise shall be controlled to result in sound pressure levels not exceeding those shown in the table below:

Location	Maximum Allowed Sound Pressure	Decibels A-weighted (dBA)
Operator's Cabin	75	Db
Dock Level	80	Db
Average inside Machinery House	95	dBA (free air)
Bells and Horns	OSHA	OSHA
Controls and monitoring rooms	75	Db

4.4.2 Noise levels shall not exceed OSHA requirements at any location within any house and on the exterior of crane.

4.5 PROHIBITED ITEMS

4.5.1 The following items will not be accepted:
(1) Cast iron, malleable iron, ductile iron, except for non-structural components and small motor frames as approved by the County.
(2) Chain drives except on hoist auxiliary systems as approved by the County.
(3) V-belt drives
(4) Cast steel axles, shafts and wheels.
(5) Surface finishes in excess of 1,000 microinch roughness.
(6) Cast iron shall not be used for any structural or main function reducer parts

4.6 DRIVE MECHANISMS

4.6.1 Three (3) drive mechanisms systems shall be installed on the Crane(s), the Main Hoist, Main Trolley and Boom Hoist.

4.6.2 Motor brakes must be arranged to permit safe removal and replacement of the drive motors without removal or disassembly of the motor brakes.

4.6.3 The drive machinery beds (or frame) shall be constructed of welded heavy steel plate and structural members. The frames shall be sufficiently stiff longitudinally and torsionally to prevent misalignment of machinery. The frames shall be designed in accordance with the applicable structural code.

4.6.4 The drive machinery frames shall have stiffeners at locations where there are point loads (such as under hoist drum pillow blocks). The bearing surfaces where machinery will be mounted shall be milled flat, true, and to the correct elevation. Shims may be used for alignment of equipment up to a maximum combined maximum thickness of 3.0 mm (.125") at any one location.

4.6.5 Mechanical equipment shall be mounted and aligned using friction grip bolts or body bound DIN Grade 8.8 bolts, nuts and washers. Galvanized bolts, nuts and washers are not acceptable. Jack screws shall be used where provisions for adjustment is required. After final alignment, welded on shear bars shall be installed. All shafts and drums shall be mounted on anti-friction bearings.

4.6.6 The drive mechanisms shall be driven by reducers, with the low speed shaft coupled directly to the drum by means of a flexible coupling. The coupling(s) connecting the drum(s) to the reduction unit shall be by Malmedie or equal, and specifically designed and rated for combined shear and torsional loads as evidenced by published catalog data and ratings.

4.6.7 Motor brakes shall be designed to set automatically as a fail-safe system. Auxiliary, drum band or disk brakes shall be provided as specified herein.

4.6.8 Magnetic brakes will not be accepted. Provide spring set thruster released disk brakes for all motor brakes. All motor brakes are to be by Bubenzer or County approved equal.

4.6.9 The drive mechanisms shall be designed to allow removal of motor brake disk and coupling, without moving the motor backwards, and without requiring the removal of the drums.

4.6.10 All drive mechanisms shall be located in the Machinery House. All drum drive mechanisms shall be mounted at or near floor level with convenient, safe access for maintenance and lubrication purposes. All exposed projecting moving parts shall be guarded in conformance with OSHA, using removable guards.

4.6.11 All drive mechanism components shall have been shop tested at the manufacturer's facility to assure free running and alignment.

4.7 MAIN HOIST MECHANISM

4.7.1 The Main Hoist mechanism shall be mounted in the Machinery Room and consist of two (2) separate drives, one on both sides of the Machinery Room. Each drive shall consisting of a motor with brake, couplings, drum and a drum auxiliary disk brake with a single shared main gearbox (reducer). Each of the drives shall be drive the single main gearbox which shall drive the two drums.

4.7.2 The Main Hoist shall be arranged inside a well-ventilated, weatherproof Machinery House. The Main Hoist machinery shall be mounted and fixed to a single rigid base floor frame in the Machinery House. The frame shall be designed, fabricated and constructed in a form to provide the required structural integrity for any vibration dampening of the main hoist system.

4.7.3 The single Main Hoist reducer shall be a completely enclosed helical gear reducer. All gears shall be splash-oil lubricated and run on anti-friction bearings.

4.7.4 Each hoist motor shall be connected to the gear reducer via a flexible coupling with brake disk served by a spring set, thruster release disk brake.

4.7.5 The drive end of the drum(s) shall be directly connected to the low speed shaft of the reducer by means of a flexible coupling. The coupling(s) connecting the drum(s) to the reducer shall be manufactured by Malmedie or County approved equal, and specifically designed and rated for combined shear and torsional loads as evidenced by published catalog data and ratings.

4.7.6 Auxiliary, spring set, electro-hydraulic disk brake(s) as manufactured by Bubenzer or County-approved equal shall be provided on each main hoist drum to stop the descent of the load from over speed without any assistance from the motor and brake(s).

4.7.7 A self-aligning anti-friction bearing shall support the idler end of the drum.

4.7.8 The Contractor shall submit the proposed trim system and snag load protection system for the County's review and approval.

4.7.9 Skew and list adjustments are not required. If proposed, the County must approve the system.

4.7.10 Rope sheaves shall be mounted on anti-friction bearings, and the sheaves shall be provided with sturdy rope guards.

4.7.11 A load limit device, i.e. load cell, shall be installed which limits the load carried by the main hoist.

4.7.12 After a Main Hoist fault due to an overload or snag, the hoist may be actuated only in the direction of "lowering".

4.7.13 The highest and lowest spreader position shall be protected by an automatic control systems slow-down, and hardwired limit switches. The end positions will be approached at reduced speed. The load above the dock (quay) may be lowered from a predetermined height of 20 feet at an automatically reduced speed.

4.7.14 The spreader shall be interchangeable (quick change-out) with existing Port of Miami spreaders. That is, the number of pins and their connections shall be matched to those in the existing spreaders to allow complete interchangeability.

4.7.15 Load sensors shall be provided to weigh the load being lifted, a digital readout of which shall be displayed in the Operator's cab and on the CMMS system for viewing and report generation.

4.8 HOISTING ACCESSORIES

4.8.1 A Twinlift Separating Telescopic Spreader(s) and a Heavy Lift Cargo Beam shall be provided with the purchase of Crane(s) as required. The Crane(s) must be designed and manufactured to be operated with these hoisting accessories. The spreaders and cargo beam shall be interchangeable with the Port's existing spreaders and cargo beams, see reference spreader and cargo beam drawings included in Section 9 of these Specifications.

4.9 TELESCOPIC SPREADER

4.9.1 The Contractor shall provide 8-Point Twin-lift Separating Spreader(s) as required with each Crane. It shall be the Contractor's responsibility to insure that the Crane(s) shall be mechanically and electrically adaptable to the spreaders operation in single and twin-lift functions.

4.9.2 The design of spreader(s) shall in all cases meet the requirements of this specification with particular emphasis on the fatigue design. The structure is to be design to withstand heavy shock loads and vibration that occur during container handling operations on the dock and ships.

4.9.3 The Telescopic spreader shall have the capability to lift either one (1) 20ft, 40ft, 45ft or two (2) 20ft ISO Standard containers. The spreader shall be attached to the headblock of the main hoist by pins so that it can easily be exchanged for another existing spreader or other special hoisting accessories. The twin-lift housings fitted into the separating center housing twin-lift system shall be retractable when not in use from the operator's control console or from the ground control station.

4.9.4 The separating twin-lift housings shall be adjustable up to a maximum gap of 1.6 m (5'-0"). The gap shall be adjustable and set to an automatic distance from the operator's cabin or the ground control station.

4.9.5 The twin-lift housings shall slide vertically from the raised to the lowered position and shall be deployed before the spreader has landed when required. The twin-lift housing operation shall be disabled while the spreader is landed. The raising and lowering of each twin-lift housing shall be by an individual hydraulic cylinder.

4.9.6 All motions of the spreaders shall be controlled from the operator's cabin and from the ground level control station. A master control disconnect switch to disable the spreader twin-lift housing operation (lower and raise) from operator's cabs on the trolley, shall be installed in the ground level control station.

4.9.7 There shall be provisions made for spreader functions/positions indicating lights on the spreaders, in the operator's cabin, and in the ground control station as well as in the CMMS. The spreader functions/positions indicating lights that shall be provided on the spreader are;

(1) Blue light, twin-lift housing in lowered position,
(2) Amber light, twin-lift housing in raised position,
(3) Red light, twistlocks unlocked,
(4) White light, spreader landed,
(5) Green light, twistlocks locked.

4.9.8 The indicating lights provided on the spreader shall be the same as used on existing POM spreaders, see reference spreader drawing included in Section 9 of these Specifications.

4.9.9 Section 5.33 provides specifications for indicator lights required in the operator's cabin and at the Ground Level Control Station.

4.9.10 The spreader shall latch onto containers by means of hydraulically operated floating twistlocks which engage the corner castings of the containers. The design and fabrication of the individual twistlocks shall be in accordance with ISO industry standards and twistlocks in use on the Port 's existing spreaders. The twistlocks system shall incorporate a mechanical interlock (blockade) as well as an electrical interlock, which shall use limit switches for the seated position detection and twistlock positions. This system shall prohibit the twistlock actuation until all four corners are completely seated under a single lift mode and all eight corners seated under the twinlift mode of container(s).

4.9.11 Each outer corner of the spreader shall be fitted with an actuator/rotary vane motor operated gather guide (flipper). The aligning arms shall be of replaceable type and provide a gathering capacity of 150mm in any direction. Actuators/rotary vane motors shall drive the gathering guides enabling easy and fast location of the spreader onto containers. The gather guides shall be retractable into the plane of the spreader to enable it to be lowered into the cellular guides of the ship's cargo hold below deck. The gather guides shall be operated in pairs; waterside and landside paired.

4.9.12 The telescopic system shall provide a positive stop location on centers for 20', 40', and 45' containers under single lift mode and twin-lift modes. The telescopic system shall be driven by

a hydraulic motor connected to a chain that is stopped in position by a proximity sensor (as manufactured by Omron) and fixed stops. The draw bars shall be fitted to absorb shock loads. The telescopic system drive chain shall be vertically mounted.

4.9.13 The spreader shall have a blockading system to prevent telescoping in a single lift mode if the twistlocks are locked or if the four (4) landed pins are in the "up" position.

4.9.14 The electrical control junction box shall be located on the side (not on top) of the spreader and protected so that it is not damaged by the normal operation of the Crane and spreader, and shall be accessible from dock level when the spreader is lowered for service. All electrical and control systems and components design, fabrication, installation and operation shall comply with the electrical requirements as set forth in Section 5 , Electrical Specifications.

4.9.15 The outer vertical corners of the end beams shall be fitted with steel wear plates to protect the gather guides actuator motor. Pad eyes shall be provided adjacent to the inside of each corner housing and be rated at 12.5 LT each and on the outside of the main spreader frame corners.

4.9.16 All limit/proximity switches shall be of the same type, brand and model number as currently in use on the existing Port's spreaders. A height sensor shall be provided with each spreader.

4.9.17 All spreader hydraulic and electrical components shall be of the same type, function and brand as currently used on the Port's existing spreaders; such as switches, electric panels, fuses, breakers, wiring, connectors, valves, actuators, lights, etc.

4.9.18 All electrical spreader shall be considered in lieu of hydraulic as well as state of the art communication systems between the spreader and Main Trolley.

4.10 CARGO HOOK BEAM

4.10.1 The cargo (hook) beam shall be used for lifting of non-containerized cargo. Its design and fabrication shall comply with all Sections of this specification.

4.10.2 The cargo beam itself shall be designed for 100 LT capacity. The certified Crane capacity with the cargo beam shall be at a minimum 100LT for special engineered and managed lifts as allowed by OSHA.

4.10.3 The cargo beam shall have provisions for connection to the headblock identical to those of the telescopic spreader.

4.10.4 The length of the beam shall not exceed the length of the headblock plus additional length for structural integrity.

4.10.5 A 100LT capacity rams horn hook with safety latches and ability to swivel shall be suspended from the center of the cargo beam. Shackle pad eyes with a minimum lift capacity of 50LT shall be provided on the underside at each end.

4.10.6 The SWL of the cargo beam at backreach and outreach shall be displayed on each side of the beam in large letters adjacent to each pad eye on both sides of the beam.

4.10.7 The beam shall be designed to be free standing on the dock with the hook clear of the ground. The ground clearance shall allow clearance for entrance of forklift blades for transportation. Forklift blade pockets shall be provided on the underside of beam. The pockets shall be a minimum of 6" X 18".

4.11 BOOM HOIST

4.11.1 The boom shall be capable of being raised and lowered by means of two (2) wire ropes each reeved with multipart reeving. Each rope shall be fixed to an equalizer beam mounted on the waterside pylon (apex) atop the cross tie beam. If one (1) of the ropes should fail, the boom shall be supported by the other rope.

4.11.2 The raised boom shall be drawn against plastic buffers by the luffing ropes, and when in its end position automatically latched to the top of the pylon.

4.11.3 In the lowered position, the boom shall be supported from two (2) separate forestay tie links so that the wire ropes are load free. The bearings on the tie links' pins shall conform to these specifications bearing criteria.

4.11.4 The Boom Hoist drive mechanism shall be installed in the Machinery Room and shall consist of an AC electric motor driving a single layer grooved drum through an enclosed helical gear reduction unit, reducer. The drive end of the drum shall be directly connected to the low speed shaft of the reduction unit by a Malmedie drum coupling, or County-an approved equal, specifically designed and rated for combined shear and torsional loads as evidenced by published data and ratings. The idler end of the drum shall be supported by a self-aligning anti-friction bearing. A spring set thruster released Bubenzer Bremsen disk brake, , shall be mounted between the motor and the reduction unit with a Bubenzer, or County approved flexible type coupling pressed and keyed directly to the reduction unit high speed shaft extension. The coupling shall allow removal of the brake disk without moving the motor backward.

4.11.5 A spring set/electro-hydraulic release auxiliary boom hoist drum disk brake same type as Main Hoist auxiliary brake, as manufactured by Bubenzer or County-approved equal shall be provided to stop the descent of the boom at any point in its travel from over speed without any assistance from the motor brake.

4.11.6 The welded or bolted rope drum shall have grooves machine cut from solid reels to permit the ropes to lay in one layer. Three dead wraps of each rope remain on the drum at the lowest hoist position for fastening the ropes to the drum. Furthermore, one empty winding shall be provided at the full end of the drum for rope stretch. Lebus systems are not acceptable.

4.11.7 The permissible drum speed is controlled by a centrifugal switch cutting off the electric motor when the speed is excessive, (i.e. exceeds ten (10) percent).

4.11.8 The rope sheaves shall be mounted on anti-friction bearings and the sheaves shall be provided with sturdy rope guards.

4.11.9 The boom hoist shall be equipped with slow-down and limit switches for either end position. The slow-down switch reduces the speed when approaching the end position. The boom hoist slow-down period shall not be less than three (3) seconds.

4.11.10 Raising and lowering of the boom shall be performed from a boom operation station, an enclosed cabin, on top of waterside cross girder. The boom operation station shall be positioned in such a way, that the boom and latches can be clearly seen during boom operation.

4.12 BOOM LATCH MECHANISM

4.12.1 The container Crane (s) shall be equipped with a boom latch mechanism which will hold the boom when the boom is in the "boom up" stowed position.

4.12.2 The boom latch shall be controlled from the Boom Operator's Station located on top of the waterside cross girder. The boom latch shall be fitted with interlocks and other safety devices.

4.12.3 The boom latch shall have positive engagement.

4.12.4 The boom latch shall be automatic. This means that the boom can be raised into a latch which is in the "latched" position, override the latch, and then the latch springs back into the "latched" position, engaging the boom.

4.12.5 The latch shall be failsafe. This means that:

(1) a latch cannot be forced into the "unlatched" position when the weight of the boom is on the latch, and
(2) loss of power causes the latch to go to the "latched " position.

4.12.6 The latch shall be designed in accordance with FEM. If the latch is shaped like a hook, then classical curved bar theory shall be used (reference: Timoshenko, "Strength of Material, Part I).

4.12.7 The boom latch shall be accessible for maintenance and lubrication; such access shall fully comply with OSHA requirements and this specification. The boom latch shall be equipped for manual operation with the use of the counter balanced weights.

4.12.8 The proposed boom latch thrusters shall be as approved by the County.

4.13 MAIN TROLLEY GENERAL REQUIREMENTS

4.13.1 The Main Trolley shall consist of a rigid steel trolley frame as required herein supported on four (4) steel wheels and carrying the load sheaves. The trolley shall have a suspended Operator's Cabin.

4.13.2 The Spreader Cable Reel shall be located on the Main Trolley.

4.13.3 To facilitate the removal or insertion of parts and components, the Main Trolley shall be positioned below the Machinery Room service hatches.

4.13.4 In addition to the basic features described above, the Main Trolley shall be equipped as follows:

(1) A single umbilical cable, AC motor driven cable reel to power and control the spreader.
(2) A non powered festoon system for trolley power and control as specified.
(3) Operator's cabin shall be fabricated of steel and insulated as required herein.
(4) Trolley bumpers, hydraulic-pneumatic type, as manufactured by Oleo.
(5) A stowed position locking device as specified herein.
(6) Safe access.

4.13.5 The Main Trolley and Cab shall be fully accessible at any location of the Main Trolley's travel. Access shall be such that a disabled operator can be removed without special rigging.

4.13.6 Except for rope openings, the Main Trolley shall be completely decked with steel grating and shall be enclosed with a hand rails with kick plates. All openings shall be curbed with kick plates as required by OSHA or at least 100 mm high. All parts shall be safely accessible for maintenance and replacement.

4.14 MAIN AND CATENARY TROLLEY DRIVE MECHANISMS

4.14.1 The Main and Catenary Trolley drive systems shall be rope towed type. The Catenary Trolley shall be rope towed driven from the Main Trolley. The proposed Catenary Trolley rope towed system shall be submitted to the County for review and approval prior to final design review.

4.14.2 Each Trolley shall be driven by two sets of wire ropes. The Main Trolley drive shall consist of an AC electric motor driving a single layer grooved drum(s) through an enclosed helical gear reduction unit. The drive end of the drum(s) shall be directly connected to the low speed shaft(s) of the reduction unit by a County approved flexible drum coupling(s), specifically designed and rated for combined shear and torsional loads as evidenced by published data and ratings. The idler end of the drum(s) shall be supported by self-aligning anti-friction bearing(s). Flexible coupling(s) shall be used to connect the motor shaft to the reduction unit high-speed shaft. A County approved spring set thruster released caliper disk brake, capable of decelerating the fully loaded trolley from full speed shall be provided. The brake disk hub shall be pressed and keyed directly to one end of the reduction unit high-speed shaft extension. If the brake is mounted between the motor and the reduction unit, a County approved, flexible coupling shall be used and the coupling shall allow removal of the brake

disk without moving the motor backward. The wire ropes shall be located as closely as possible to the trolley wheels to minimize skewing of the trolley. Rope and all drive equipment shall be sized for reversing loads. A rope-tensioning device configured to avoid reverse bending of the ropes, shall be furnished and installed to maintain proper rope tension during normal operation of the Crane. The tensioning device shall utilize sheaves at trolley end of travel position to avoid introduction of additional rope bends. The additional rope forces forthcoming from the tensioning device shall be considered in the rope sizing. Trolley drive machinery shall be located in the Machinery House on machined mounting surfaces. Machinery and equipment shall be arranged to be easily accessible for maintenance.

4.15 MAIN TROLLEY & CATENARY TROLLEY ROPE TENSIONING DEVICES

4.15.1 Independent rope tensioning devices shall be provided for each the Main Trolley and Catenary Trolley rope systems. The tensioning devices shall be configured to avoid reverse bending of the ropes, and shall be furnished and installed in the backreach or as approved by County to maintain proper rope tension during normal operation of the Crane.

4.15.2 The power unit for the tensioning devices if hydraulically operated may be incorporated into the snag protection system, described in Section 4.16.

4.15.3 The tensioning devices shall utilize sheaves at trolley end of travel position to avoid introduction of additional rope bends. The additional rope forces forthcoming from the tensioning device shall be considered in the rope sizing.

4.16 SPREADER TRIM ADJUSTMENT

4.16.1 The Crane shall be provided with a mechanism to adjust from the operator's cabin, the trim of the spreader longitudinally to plus or minus five (5) degrees from horizontal. This mechanism shall be provided with an indicator in the operator's cabin which indicates the mid-point and the maximum travel positions in either direction. The mechanism shall be provided with a positive means to operate and maintain the selected spreader position under all operating conditions, including the hoist stall condition. A control shall be provided to home (re-center trim) the spreader automatically.

4.16.2 The Contractor shall suggest the best method(s) for estimating these angles during operation in the operating instructions.

4.16.3 The system shall be mechanical, with electric motors and located at the boom tip and shall limit the trim angle to the maximum limits indicated above. In addition, overtravel limit switches shall be provided for each motion.

4.16.4 The installation shall be complete with all stops, limit switches, interlocks and other safety devices required for a fail safe operation.

4.16.5 The Contractor shall provide arrangement and detail drawings of the trimming concept for County review prior to releasing the design for manufacturing.

4.17 SNAG LOAD PROTECTION

4.17.1 An efficient, energy absorbing snag load device shall be provided. The device shall incorporate hydraulic cylinders supporting main hoist sheaves mounted on pivoting arms at the main girder backreach to absorb the energy of a snag load. The intent is to prevent damage to any part of the Crane(s), if the empty or loaded spreader is suddenly stopped such as would occur, if, at full hoist speed, the spreader contacts the underside of a vessel's hatch girder. This device must be instantaneous, acting prior to activation of any overload or over current limits. The device shall be continuously re-settable from the electrical control room without requiring maintenance personnel to adjust or reset any device on the snag load equipment. The system shall incorporate dual (redundant) hydraulic pumps and motors. The installation shall be complete with all stops, limit switches, interlocks and other safety devices required for safe operation.

4.17.2 The hydraulic system shall be a closed system properly designed to prevent accumulation of moisture in the system and resulting corrosion in the cylinders and other components. Hydraulic cylinder rods shall be stainless steel. The low pressure piston side of the hydraulic cylinder shall be oil filled and isolated from the ambient environment at all times.

4.17.3 In lieu of hydraulic cylinders, other types of mechanical energy absorbing systems may be proposed for County approval. The Contractor shall provide a technical description of his proposed snag load system for approval by the County prior to design and installation.

4.18 TROLLEY BUMPERS

4.18.1 Bumpers shall be provided at each end of the trolley. Stops of sufficient energy absorbing capacity to stop a loaded trolley when traveling at full speed with the power off shall be fitted at each end of the Trolley runway. The bumpers shall have sufficient energy absorbing capacity to stop the trolley, without overstressing or damaging the stops, bumper supports, trolley, or, boom structure. The weight, inertia and other applicable loading criteria of the suspended rated load shall be considered in the total mass being stopped. This requirement applies for boom down, boom up and the partially raised position in between.

4.18.2 Bumpers shall be hydraulic-pneumatic type as manufactured by OLEO or County approved equal.

4.18.3 Regardless of bumper selection, the maximum deceleration rate shall not exceed 16 feet per second squared when impacting at the maximum specified speed.

4.18.4 The centerline of trolley bumpers shall be located as close as practical to the elevation of the center of mass of the complete trolley.

4.18.5 Bumpers shall meet the applicable provisions of AISE and CMAA Specifications.

4.19 TROLLEY WHEEL AND RAIL SYSTEM

4.19.1 The Trolley rails shall be installed on the sides of the boom, as low to the bottom edge as structurally feasible. An additional ten (10%) percent of safety factor above the required by applicable code(s), shall be used in the design and fabrication of the rail support structure on the boom.

4.19.2 The Trolley wheel and rail system shall be designed to eliminate jamming, binding, and excess skew and to minimize chatter, banging, excessive flanging, and bumping. Trolley wheels shall be adjustable. Fixed wheels are not acceptable. Smooth, low friction, low vibration trolley travel is required.

4.19.3 The Trolley wheels shall be arranged so that the load on all four (4) wheels is equal under static and dynamic rated load conditions.

4.19.4 Wheel centers (wheelbase, parallel to the direction of travel) shall be as far apart as practical to provide a smooth as possible ride, and to minimize the effects of skewing.

4.19.5 The Trolley shall be built to ensure protection against the trolley falling from the crane in the event of derailment, a broken wheel or axle.

4.19.6 The Trolley guide side rollers shall be mounted at the four (4) corners of the Trolleys. The guide rollers shall rotate about a vertical axis and bear against the inside of the Trolley railhead. The guide rollers shall be designed and installed in a manner that will prevent derailment by having the rollers bear against the rail. The guide roller assembly shall be eccentric aligned and adjustable for Trolley alignment.

4.19.7 The Main and Catenary Trolley wheels and axle assemblies shall be arranged to permit easy removal and replacement for maintenance.

4.20 WIRE ROPE RE-REEVING WINCH

4.20.1 A self-contained motor driven wire rope re-reeving device shall be provided in the Machinery Room and shall be arranged to allow convenient re-reeving of the Main Hoist, Boom Hoist, Main Trolley and Catenary Trolley drive ropes during routine rope replacement. Access systems shall be provided to assure safe and convenient access of the re-reeving winch. The winch shall accommodate regular commercial cable reels and shall be equipped with a steel reel of a capacity adequate for the size and lengths of the ropes used in the system. A variable torque disk brake, or other type as approved by the County, shall be supplied to control the payout of the replacement rope during re-reeving operations. Hand-applied brakes are not permitted. The re-reeving device shall be located so that the cable spools can be easily handled and installed by the Machinery Room overhead service crane. The drive arrangement shall give adequate attention to safety and the drive motor shall include integral disk brake.

4.21 MAIN TROLLEY STOWAGE

4.21.1 The Main Trolley shall be equipped with a stowed position-locking device able to withstand maximum wind conditions which device will secure the Trolley to a fixed position when out of service.

4.21.2 This stowed position-locking device may be similar to the gantry travel stowage pins or may be of a different configuration. In any case, it shall be positive, fail safe, and interlocked with the Trolley drive.

4.21.3 The location of the Main Trolley stowed position shall permit entrance and exit from the operator's cab on to the Main Trolley access platform. This stowed position shall also permit lowering of the spreader and head blocks to the wharf's deck. The stowed position shall be equipped with a limit switch to permit boom operation.

4.21.4 The normal route for access to the Main Trolley shall be located at the Main Trolley stowed position via the Main Trolley access platform.

4.22 MISCELLANEOUS MAIN TROLLEY PROVISIONS

4.22.1 The Main Trolley shall permit emergency egress and access from any location on the Boom and Main Girder. Access and egress provisions are to be submitted and approved by the County.

4.22.2 The Main Trolley frame shall be fully decked with suitably designed grating except as required for penetrations, and shall be fully equipped with guard rails (hand rails) as required by specified safety codes. All parts of the trolley shall be readily accessible for maintenance and lubrication; such access shall fully comply with OSHA requirements.

4.22.3 Service platforms shall be provided in accordance with OSHA standards to all serviceable equipment to include but not limited to the operator's cabin, under boom and main girder flood lights, main hoist sheaves, load cells and trolley drive mechanism.

4.23 MANUAL MAINTENANCE HOIST/JIB

4.23.1 Four (4) manual 500 lbs. minimum working capacity jib or monorail type maintenance hoists shall be installed; one (1) at the apex of the waterside pylon, one (1) to remove/replace boom hoist sheaves on Boom, one (1) above the trim platform and one (1) above the Trolley in the backreach position. A detachable manual block and chain fall shall be provided at each location. The apex hoist shall be designed to enable lifting components from the main girder and trolley structure to the apex access surface. The trim platform hoist shall be designed to enable lifting components from the trim platform level to the main girder and trolley structure. The trolley hoist shall be designed to service and maintain the Main and Catenary trolleys and lifting system components. The location and design of the hoists shall be submitted for review.

4.23.2 A manual jib or monorail type maintenance hoist shall be provided at the snag-load and rope tensioning equipment. The hoist location and configuration shall be designed to enable lifting any of the snag-load or tensioning device components and lowering to the main girder and trolley structure.

4.23.3 Manual jibs shall be provided at other locations as appropriate for servicing of heavy components (sheaves, wheels, hydraulic cylinders, anti-snag cylinders, etc.).

4.24 MACHINERY HOUSE, ROOM AND CABIN VENTILATION

4.24.1 All heating, ventilation, and air conditioning criteria shall comply with the standards as set by ASHRAE and all other codes and standards to include NFPA and SMACNA. Refrigerants used in heating, ventilation, and air conditioning units shall comply with latest US environmental standards and codes.

4.24.2 All habitable houses, rooms and cabins shall be ventilated as required by the US codes and standards. The Machinery Room and Boom Hoist Operator's Cabin shall be ventilated from ambient atmosphere. The Crane Operator's Cabin, Control Room, Dock Level Monitoring Station and the Drives Room shall be ventilated by air conditioning systems.

4.24.3 The Machinery Room shall be adequately ventilated by fans to match the required climatic temperature conditions of Section 2.5. The fans shall be connected such that in the event of a failure of one unit, the other will continue to work. The fans shall be thermostatically controlled and shall automatically switch on when the power to the machinery is on. The fans shall take in filtered air and pressurize the houses.

4.24.4 The fan and inlets shall be of sufficient capacity to change the air in the house as required by ASHRAE. Additionally, the fans shall provide adequate ventilation to maintain the temperature in the house five (5) degrees above ambient, with all machinery and heat generating equipment in the house operating.

4.24.5 Fan inlet opening shall have rain hoods with backdraft louvers made of stainless steel. The hoods shall be designed to incorporate replaceable air filters. All louvers must have manual locks for hurricane wind conditions. The Contractor shall assure the fan inlets do not allow entry of moisture into the houses.

4.24.6 No roof mounted ventilation or air conditioning systems are permitted.

4.24.7 Split-system air-conditioning and heat-pump units with separate horinzontal split evaporator coil, evaporator-fan and compressor-condenser components shall be provide for the Control and Drives Room. The components shall be of galvanized-steel to include the chassis and drain pan, insulated, with copper-tube refrigerant coil, forward-curved galvanized fan, multispeed motor, Electric Heating Coil and high efficiency disposable filters. Cable of re-circulating the inside air and control outside air usage.

4.24.8 Condenser Units shall have 360 degree access and shall have a minimum of 900mm (3'-0") clearance all around for ease of maintenance.

4.24.9 Condenser Units shall be factory-assembled and tested, air-cooled condensing units for use in air-conditioning systems. The compressors shall be hermetically or semihermetically sealed and isolated.

(1) Air-Cooled Units, 1 to 5 Tons shall consist of the following:

a. Condenser: Copper-tube, aluminum-fin coil with liquid subcooler.
b. Condenser Fan: Direct-drive, propeller.
c. Accessories: Low-voltage thermostats and subbase, precharged and insulated refrigerant tubing, low-ambient kit, crankcase heater, automatic reset timer, and PE mounting base.
d. Casing: Steel.

(2) Air-Cooled Units, 5.1 to 30 Tons impendent dual compressor system shall consist of the following:

a)	Capacity Control:	Cylinder unloading or Hot-gas bypass.
b)	Condenser:	Copper-tube, aluminum-fin coil with liquid accumulator and subcooler.
c)	Condenser Fan:	Direct drive, propeller type; with low-ambient control.
d)	Operating Safeties:	Factory mounted and wired.
e)	Casing:	Galvanized construction, with unfused, factory-mounted and -wired disconnect switch.

4.24.10 The diffusers and grilles to the Control Room shall be overhead away from any of the electrical panels and components as approved by the County.

4.24.11 The Drives Room ventilation system shall have no overhead diffusers and/or grills for conditioned air. All conditioned air shall be ventilated to underneath the floor of the room. The electrical panels and cabinets shall install in a manner that the conditioned air ventilates thru it for cooling the electrical systems as required by the manufacturer. Return air grills shall be installed overhead as close to the ceiling as possible. This ventilation system shall have the components to be able to properly balance the air flow by way of manual dampers.

4.24.12 Metal ducts for supply, return, outside, and exhaust air-distribution systems shall have rectangular ducts and fittings double-wall with duct liner (internal insulation) and formed fittings. The ducts shall have dampers, silencers, turning vanes, duct-mounted access doors. All metal parts and components shall be Galvanized steel construction.

4.24.13 The Contractor shall be responsible for testing, adjusting, and balancing air distributions, measuring electrical performance of HVAC equipment, setting quantitative performance of HVAC equipment, verifying automatic-control device functions, measuring sound and vibration, and reporting results of activities and procedures as required herein and all applicable codes and standards.

4.25 MACHINERY ROOM MISCELLANEOUS

4.25.1 The Machinery Room shall be equipped with, and shall conform to the following provisions:

4.25.2 Storage lockers shall be provided in the Machinery House with appropriate shelves and bins for storage of spare parts and supplies. A metal framed, wood topped workbench shall be furnished next to the lockers.

4.25.3 A framed hatch to be used in conjunction with the overhead service crane (s), large enough to accommodate the largest piece of equipment, shall be provided in the floor of the houses. The hatch cover shall be rigidly framed and fitted with flush type lifting devices. The hatch opening shall be protected with removable guardrail sections in conformance with OSHA 29CFR1910 and set in countersunk flush type deck sockets with drain holes.

4.25.4 All windows provided shall be safety glass and comply with FBC requirements. All glass shall all be tinted as approved by the County, and shall be mounted in deep rubber gaskets, and secured in place by continuous metal frames. The metal frames shall be easily removed for replacement of window and all windows shall be lockable.

4.25.5 The Room shall be of a size sufficient to accommodate, without crowding, operating machinery, levers, controller, and any other equipment necessary for the proper operation and control of the crane. No passageway shall be sized less than required by OSHA and US industrial standards. All machinery must be accessible for maintenance, with minimum clearance as required. All machinery, locations, guards, and safety features shall be in accordance with OSHA 29CFR1910, NEC, and this Specification.

4.25.6 Fire extinguishers shall be installed in accordance with applicable US codes.

4.26 WHEELS GENERAL

4.26.1 All design criteria shall be as specified by FEM, DIN or applicable code unless otherwise noted.

4.26.2 The gantry shall be furnished with double flanged forged steel wheels, minimum 900mm (35.4") tread diameter, and, the Main and Catenary Trolleys shall be furnished with double flanged forged steel wheels, minimum 710mm (28") and 450mm (17.7") tread diameters respectively. The Main and Catenary Trolleys shall be furnished with forged steel side guide rollers, minimum diameter 400mm (15.75") and 140mm (5.5") respectively and the Catenary Trolleys shall be furnished with forged steel hold down rollers, minimum diameter 170mm (6.7").

4.26.3 Wheels shall be mounted on live (rotating) axles. In either case, wheel and axle assemblies shall be arranged to permit easy removal and replacement for maintenance. Heavy bearing fits and pre-loads shall be used in accordance with the bearing manufacturer's recommendations. Proper provision to handle thrust loads (due to skewing or wind) shall be made.

4.26.4 The wheels live axles shall have no less than a Class 7 Medium Force Fit. Drive wheels shall also be keyed.

4.26.5 All wheel axles shall be mounted on anti-friction bearings.

4.26.6 The maximum imposed static load without impact shall not exceed rated wheel capacity.

4.26.7 Drive wheels shall be supplied in matched pairs within 0.25 mm (0.010 inches) variation on the diameter. Finish on the treads and inside flanges shall be 63 micro inch or finer.

4.26.8 Wheels shall be properly aligned. All wheel axles shall be parallel to each other, horizontal, and at right angles to the rail.

4.27 MAIN AND CATENARY TROLLEY WHEELS

4.27.1 Main and Catenary Trolley wheels shall be double flanged with guide rollers. Guide rollers shall be designed using same criteria that apply to trolleys' wheels.

4.27.2 All Main and Catenary trolley wheels (and guide rollers) shall be forged steel and have straight treads and case hardened or case carburized to 60-63 Rockwell C hardness. Effective case depth (defined as the depth where case hardness is 50 RC) shall be at least equal to the depth at which maximum shear stress occurs (usually about 0.125 inches for most crane wheels). Core material shall be of sufficient strength to support the case.

4.28 GANTRY TRAVEL WHEELS

4.28.1 All gantry travel wheels shall be identical except for mounting details. These wheels shall be so arranged in trucks (bogies) and equalizing beams such that the corner load is equally distributed to all wheels of the corner.

4.28.2 Gantry travel wheels shall be designed to operate on 171 lb./yd. crane rail. The rails are in place and flush mounted.

4.28.3 Each motor shall drive one wheel via a reducer. Seventy-five (75%) percent of the LS wheels shall be driven and seventy-five (75%) percent of the WS wheels shall be driven.

4.28.4 The gear reducers shall not be self-locking, so that during failure of the motors, the Crane can be moved with an outside force. The brakes shall be released manually in this case.

4.28.5 The gantry trucks shall be fitted with drop blocks, rail sweepers, hydraulic buffers at the four outer trucks, and automatically operated storm brakes.

4.28.6 In addition, the Crane shall be equipped with pin stowage devices and with hurricane tie downs at the four legs, safeguarding the Crane against traveling under storm conditions and out of service. Tie downs must be designed and installed to be used on the existing tie down system in place at the Port of Miami, see dock interface drawing included in Section 9 of these Specifications.

4.28.7 The removal of the wheel trucks shall be performed without removal of the equalizing beams. Supports shall be provided for mounting of hydraulic jacks. Provide hydraulic jacks to service the trucks, bogies and wheels. Provide a set of two (2) hydraulic jacks per crane.

4.28.8 All gantry travel wheels shall have straight treads and be double flanged.

4.28.9 As a minimum, gantry travel wheels shall be rim toughened (or through hardened) to 321-363 Brinell hardness with a hub hardness not exceeding 293 BHN.

4.28.10 Gantry wheels shall be wrought steel wheels meeting ASTM A504 Class C; or fabricated from forged steel. In any event, metallurgy shall be appropriate for the manufacturing and heat treating process, hardness required, and service intended.

4.28.11 Submittals shall include steel mill certifications and test results must be submitted for approval by County. See Section 7.2 for Quality Control requirements.

4.29 GANTRY TRAVEL BUMPERS

4.29.1 The gantry travel bumpers shall have sufficient energy absorbing capacity to stop the container crane when traveling at one hundred percent (100%) of full rated speed with the motors de-energized.

4.29.2 Bumpers shall meet all applicable provisions of AISE Standard No. 6, and CMAA Specification #70.

4.29.3 The bumpers must be interchangeable align with those in use at the Port of Miami on other Cranes, see the General Arrangement Drawing included in Section 9 of these Specifications for existing gantry bumper height and bumper location..

4.29.4 The bumpers shall be hydraulic-pneumatic as manufactured by Oleo or County approved equal.

4.30 GANTRY TRAVEL TRUCKS – GENERAL

4.30.1 Gantry travel trucks shall be fully equalized and shall meet all other requirements of this Specification.

4.30.2 Each truck assembly with attached machinery shall form a self-contained unit and shall be shipped to the erection site as such.

4.30.3 The trucks shall be designed and fabricated to comply with the specified overall bumper length of 88'6"

4.30.4 The trucks shall be tested at the Contractor's facility and pre-commissioned to assure free running and alignment.

4.31 GANTRY TRAVEL TRUCKS – STRUCTURAL

4.31.1 The truck housing and equalizer beams shall be constructed of welded heavy steel plate and structural members. The truck structure shall be stiff enough to prevent misalignment of machinery and improper tracking (skewing). The truck structure shall be sufficiently strong to carry all loads and shall be designed in accordance with the chosen structural code.

4.31.2 The trucks width must allow a 25mm (1") gap between the truck and the hurricane tie down links to facilitate tie down procedure.

4.31.3 The trucks design and fabricated to comply with the bumper base design criteria, must be able to withstand all loading requirements as set forth in these specifications.

4.32 GANTRY TRAVEL TRUCKS – MECHANICAL

4.32.1 Gantry gear reducers can be horizontal or vertical mounted as approved by the County. They shall be totally enclosed, and oil lubricated. No open gearing is permitted.

4.32.2 Travel drives shall not be self-locking. All drives shall have brakes. One gantry drive motor shall drive no more than one (1) wheel.

4.32.3 The gantry drive shall be mounted on the crane trucks so as to minimize the danger of damage from vehicles and equipment working in the vicinity of the Cranes. Preferably no part of any drive should extend outside the width of the basic structural truck frame. Any components extending beyond these confines must be protected by a heavy metal frame around the drive system, with schedule 120, 4 inch pipe.

4.33 GANTRY TRAVEL TRUCKS – MISCELLANEOUS

4.33.1 The trucks shall be equipped with the following features:

4.33.2 A safety drop block on each bogie 1 inch (25 mm) above top of rail to prevent excessive drop in case of wheel or axle breakage.

4.33.3 Wheel/axle assemblies shall be arranged to permit easy removal for maintenance.

4.33.4 Jacking pads for use when changing wheels.

4.33.5 Guards for moving parts in compliance with OSHA rail sweepers, heavy steel plate type, per AISE Standard No. 6. These sweeps shall be removable to permit removal of wheel/axle assemblies.

4.33.6 Storm Brakes: Provide friction type storm brakes on the gantry with the capability of being turned on or off manually.

4.33.7 Hurricane tie downs and stowage pins shall be provided to match the existing dock locations. Appropriate electrical contacts shall be installed to assure that the travel drive cannot be operated before the pin locking device has been unfastened.

4.33.8 Trucks shall be designed to provide protection to all moving parts. This includes, but is not limited to, seals on bearings and reducers; full guards, dust covers, and shields; no water pockets; a means for cleaning and flushing and easily accessible parts and components.

4.33.9 Fully accessible lubrication points and grease fittings shall be provided.

4.34 LUBRICATION

4.34.1 All areas where sliding or rolling occurs shall be lubricated, this includes pins in equalizer beams, forestays, backstays, and similar pinned structural members.

4.34.2 All enclosed reducers shall run in oil baths. Oil shall be an EP (Extreme Pressure) type recommended by AGMA or the reducer manufacturer. All enclosed oil bath drives shall be fitted with oil fills, breathers (dust proof and drip proof), a means for checking oil level, convenient drains, and catch pans.

4.34.3 Coupling lubrication shall be to the coupling manufacturer's specifications.

4.34.4 All lubricants shall meet pertinent ASTM, SAE, and API standards.

4.34.5 All other areas shall be grease lubricated. This includes, but is not limited to, the following items:

4.34.6 Sheaves, boom hinge pins and forestay pins, wheels and axles, pillow blocks and other roller bearings; bronze bushing, equalizer pins and swivel trunnions, control linkages, and spreader mechanisms.

4.34.7 Grease shall be water resistant. Gear greases shall be an EP (Extreme Pressure) type. For extreme applications, additives such as molybdenum disulfide are required.

4.34.8 Grease fittings shall be zerk type; size shall be ¼ inch PTF-SAE extra special short.

4.34.9 Grease fittings shall be located in central areas and easily accessible. Grease piping shall be of an approved stainless steel material.

4.34.10 Sensitive seals and packing shall be protected with relief passages and/or relief fittings.

4.34.11 Bronze bushings shall have grease grooves in accordance with CBBI. Bushings shall be secured with dowels, or other means to prevent "loss" of a grease path due to a misaligned part.

4.34.12 The Contractor shall provide automatic grease lubrication for boom components and pylon head (top of apex).

4.34.13 Central lubrication points will be installed at any location where there are more than four (4) lubrication fittings located within four (4) meters of the farthest fitting.

4.34.14 The Contractor shall prepare six (6) plastic coated lubrication charts per crane showing all points to be lubricated and type of lubricant to be used at each of the required location. The charts shall be mounted in the Machinery Room, Control Room and Dock Level Monitoring Station in a convenient location behind clear wipe-clean plastic and the other three (3) shall be provided for the maintenance personnel.

4.35 REEVING, GENERAL PROVISIONS

4.35.1 All portions of reeving, including, but not limited to, wire rope, sheaves, hoist drums, fittings, guides, and rollers, shall be designed so as to maximize wire rope life. Factors which reduce wire rope life shall be minimized or eliminated as far as practical. These factors include: reverse bends, sheave diameters too small; sheave material too soft; hoist drum abrasion or crushing of wire ropes; improper spooling on drum; excessive fleet angles; abrasion of wire rope against fixed surfaces such as improperly positioned guides; improper sheave grooves; overload and impact. The wires ropes shall be standard right lay.

4.35.2 The Contractor shall design the reeving system to the best current practices, recognizing the fact that container Cranes use application of wire ropes.

4.35.3 The details and design of, the reeving system shall meet all provisions of AISE Standard No.6, Sections M.3 (Drums), M.4 (Ropes), M.5 (Equalizer Bar or Sheaves), M.6 (Sheaves and Hook Blocks) and FEM if not covered under AISE.

4.36 WIRE ROPE

4.36.1 Wire rope shall be extra improved plow steel with independent wire rope core as manufactured by a US based company: no exceptions shall be made. Wire rope shall be inspected and tested by an independent testing laboratory. Main Hoist, Main Trolley, Catenary Trolleys and Boom Hoist wire ropes shall be 6 x 36 bright construction, and be supplied in English-system dimensions, not metric. Wire ropes shall have the following safety factors considering reeving efficiency and based on the wire rope manufacturer's catalogued breaking strength for extra-improved plow steel grade rope:

(a)	Main hoist wire ropes with concentric 65 LT load	6.0
(b)	Main hoist wire ropes with eccentric design load	4.0
(c)	Boom hoist ropes	6.0
(d)	Main and Catenary Trolleys	6.0

4.36.2 Rope safety factors for twin-twenty (2-20) spreaders shall be considered with twin-twenty eccentric loads (LLE). A weight of 34,000 lbs shall be assumed for the spreader. Rope forces due to the Main and Catenary Trolley Rope tensioning devices shall be considered in sizing of the Main and Catenary tow ropes.

4.36.3 Each rope is to be supplied with full test certification.

4.36.4 Wire ropes shall be County-approved and shall be internally and externally pre-lubricated at the factory by the wire rope manufacturer prior to delivery.

4.36.5 The Contractor shall use methods that avoid reverse bending and the development of kinks, that minimize the size and number of rub blocks and guide rollers, and the need to replace (change) the wire rope. In the Maintenance and Inspection Manuals, he will describe methods to make required re-reeving easier. All wire ropes shall utilize an approved re-reeving system and all systems shall be described in detail in the proposal.

4.36.6 Dead end wire rope terminations shall be by means of thimbles with wire rope clips or open wedge sockets with wire rope clips. Zinc wire rope sockets shall not be used. The Contractor shall recommend the method and timing of periodic inspections, criteria for replacement, and the repair methods for the wire rope connections he uses. The Contractor's selection and recommendation shall consider the potential for galvanic action and/or corrosion. Bolted clamps with threaded plates shall be used to secure the wire rope to equipment as necessary.

4.36.7 UHMW buffers or rollers shall be provided for protection of wire rope at all points where contact with crane structure could occur.

4.37 WIRE ROPE FITTINGS

4.37.1 Spelter sockets shall be poured with zinc only. Babbitt soft material metal and lead are not permitted.

4.37.2 Wire rope clips shall be Crosby brand clip or as approved by County . Clips may be wither U-bolt type Crosby G 450 or Fist Grip installed per manufacturer's recommendations, fully torqued, checked, and retorqued after acceptance certification tests.

4.37.3 All wire rope fittings, including shackles, hooks, turnbuckles, thimbles, swaged fittings, spelter sockets and wedge sockets shall be as manufactured by the Crosby Group or as approved by the County , and shall be selected on the basis of published catalog ratings.

4.38 SHEAVES

4.38.1 Sheaves for a given size of wire rope shall be identical and fully interchangeable. All sheaves shall be of the same manufacturer. Sheaves shall be of cast steel as manufactured by ZPMC in accordance with the following requirements:

(1) All sheave rope grooves to be fully machined and surface hardened or hard faced to HB 321 minimum.
(2) All sheaves in the area around the rope groove shall have one hundred per cent (100%) NDT inspection.
(3) Welding repair of castings is not allowed in any area that becomes machined.
(4) No porosity or defects of any significance in the metal around the rope groove shall be acceptable.
(5) The drawings shall include requirements to assure the cast sheaves are in balance (to reasonable requirements) after machining and that rope grooves are concentric to

machined bores. Additionally, drawings shall also include tolerances for lateral deviation/run out of rope grooves from centers of the cast sheave webs.

4.38.2 All sheaves shall be provided with anti-friction bearings. Proper provision to handle thrust loads shall be made. The bearing assembly shall be fully sealed using a lip type neoprene seals. Provisions shall be made to lubricate each sheave individually. Anti-friction bearings shall be proportioned in accordance with this Specification.

4.38.3 Sheaves may be either cast steel, forged steel, or fabricated steel construction. Cast iron or powdered metal sheaves are not permitted. Sheaves shall be of carbon or alloy steel with thread (or groove) hardened to 38-44 Rockwell C, or 11-13 percent (11-13%) Manganese steel (Hadfield's alloy) properly heat treated, or equal.

4.38.4 Sheave grooves shall be fully machined and shall be properly sized to accept English (inch) size wire rope. The diameter of the groove shall be slightly larger than the diameter of the wire rope (for clearance required to avoid pinching) according to current recommended practice and design standards. Other groove dimensions shall be as follows:

(1) Groove Depth: Minimum 1-1/2 times wire rope diameter.
(2) Sheave Throat Angle: 35 degrees minimum to 45 degrees maximum
(3) Included Groove Angle for Wire Rope Support: 135 degrees minimum to 145 degrees maximum.
(4) Radius of Throat to Flange Surface Transition: ¼ inch radius minimum
(5) Sheave Width at Rim: Approximately 2 times wire open diameter plus ¾ inch.
(6) Thickness of Sheave Metal Under the Bearing Portion of the Groove: Minimum one times the wire rope diameter.

4.38.5 All sheaves shall be equipped with rope guards to prevent the ropes from running out of the sheave grooves. The head blocks shall be fitted with easily removable full guards.

4.38.6 No more than two (2) sheaves shall be mounted together between full sized cheek plates. All blocks and sheave assemblies shall be rigid and properly aligned.

4.39 DRUMS

4.39.1 All rope drums shall be welded with grooves machine cut from solid reel to permit the ropes to lay in one (1) layer. The pitch diameter of a drum shall not be less than thirty (30) times the diameter of the wire rope for that drum. Drums shall be rolled steel weldments. Complete penetration welds shall be used for the drum shell. The Boom Hoist drum may be manufactured in two (2) separate drums and bolted together upon assembly and installation. Strict attention shall be given to alignment of the two (2) pieces.

4.39.2 The minimum acceptable grades of steel for the drum are ASTM A36 (rolled) or ASTM A27 Grade 70-36 (cast). Drums shall be surface hardened to a minimum of BHN321.

4.39.3 Drums shall be stress relieved before machining and balanced after machining, with rope clips in place.

4.39.4 Drums shall be sufficiently sized to allow for the full range of hoisting to wrap on one (1) layer only. There shall be no less than three (3) "dead" and two (2) fastening wraps on the drum under any operation condition. The dead end of the drum shall be secured by a bolt clamp capable of developing the maximum rope capacity. One empty winding shall be provided at the full end of the drum for rope stretch.

4.39.5 The drums shall be grooved with groove contour and pitched to allow proper rope spooling under all load and speed conditions without chafing, scrubbing or any other adverse condition.

4.39.6 The drums shall have flanges or surfaces as required for auxiliary disk or band brakes. The opposite end of the drums shall have flanges of adequate diameter that they protrude radially not less than two rope diameters above the top of the wire rope wound on the drum.

4.39.7 Each drum shall be concentric about the drum shaft and round to within AISE and FEM requirements. The drum end discs and shaft shall be sufficiently strong to carry all drum loads to the hoist frame. The drum end discs and shaft shall be sufficiently stiff to not result in any deflection and prevent misalignment of drum gears.

4.39.8 The drum shell shall be sufficiently strong to resist crushing by a safety factor no less than 2.5 for the case of spooling the entire layer at the safe working load of the rope.

4.39.9 The drum shall also be capable of supporting all imposed bending and torsional loads on the basis of methods set forth by AISE and FEM.

4.40 HEAD BLOCK

4.40.1 Each crane shall be equipped with a quick change head block consisting of a structural frame with two sets of sheave nests that are permanently reeved into the hoisting ropes, the same as used on existing POM Cranes, see reference Headblock drawing included in Section 9 of these Specifications. The headblock shall be provided with a personnel platform complete with safety railing and grated floor. The platform shall have access from either side, including ladders, while the spreader is resting on the dock. The platform shall be large enough to carry four men and shall have a basket to safely contain approximately 200 twist-locks commonly used to stow containers on vessels.

4.40.2 These head blocks shall be 4900 mm (16' – 1") centerline to centerline and shall be configured to allow these Cranes to use existing spreaders owned by the Port.

4.40.3 The Contractor shall verify the dimensions of the existing spreaders and be fully responsible for proper interfacing of his new head blocks with the existing spreaders.

4.40.4 Sheaves may be attached to the head blocks in any reasonable arrangement, provided that the center of gravity of all sheave forces coincides with the centerline of the head block for the static load condition.

4.40.5 Pad eyes shall be provided to allow handling of cargo, other than containers, weighing, at a minimum, the rated load plus the weight of the spreader.

4.41 BEARINGS

4.41.1 All bearings shall be anti-friction bearing except as specifically noted otherwise in this Specification.

4.41.2 All bearings shall be of either English (inch) size or Standard Plan for the boundary Dimensions of Metric Bearings and shall be of sizes normally manufactured in the United States. All bearings shall conform to standards of the Anti-Friction Bearing Manufacturer's Association (AFBMA), ANSI and International Standards Organization (ISO).

4.41.3 Acceptable bearing types are radial or thrust, having balls, spherical rollers, hour glass rollers, cylindrical rollers, tapered rollers or needle rollers. Critical high speed bearings shall be as manufactured by SKF, which shall be provided in the following locations as approved by the County:

(1) Headblock sheaves
(2) Snag System sheaves
(3) Main Hoist Bearing Pedestal
(4) Boom Hoist Sheaves
(5) Boom Equalizer Sheaves
(6) Boom Hoist Bearings Pedestal
(7) Trolley Wheels
(8) Trolley Guide Rollers (bearings lands)
(9) Trolley Drum Pedestal Bearings
(10) Main Hoist sheaves
(11) All high speed shafts main functions gear reducers

All other bearings may be Chinese manufacture with at least three (3) spare bearings provided for each type and size of Chinese bearing used on the Crane(s) as approved by the County.

4.41.4 Bearing size shall be selected on the basis of B-10 (also known as L-10) life for the hour rating, loads and speeds per FEM requirements.

4.41.5 In addition, all bearings shall meet provisions of AISE Standard No. 6, Section M.12 (Bearings) except as specifically amended herein.

4.41.6 All bearings shall have inner races. Bearings shall not run directly on the surface of any shaft or axle.

4.41.7 All pillow blocks shall be of cast steel or fabricated steel. Cast iron pillow blocks are not permitted.

4.41.8 Wherever possible, self-aligning type bearings shall be used. Wherever practical, a given shaft shall be fitted with a combination of axially fixed and axially "floating" bearings in such a manner as to allow free expansion of the shaft without introducing unintentional thrust loads.

4.41.9 All bearings shall be arranged for individual lubrication. Either grease or oil lubrication is permissible provided the method of lubrication is appropriate and meets recommendations of bearing manufacturer and AFBMA. Minimum closure designs are:

(1) Neoprene type lip or garter seals for all oil lubricated bearings and all grease lubricated bearings operating in a dirty environment; and,
(2) annular groove (labyrinth) shield for all grease lubricated bearings operating in a clean environment.

4.41.10 All bearing applications and mounting arrangements, including fits, clearances, alignment, shoulders, race support, pre-load, and closure design shall be per the bearing manufacturer's recommendations.

4.42 GEAR DRIVES

4.42.1 All spur, helical, or double helical gears built to metric dimensions shall be 20 degrees pressure angle full depth involute of standard module. All spur, helical, or double helical gears built to English (inch) dimensions shall be of one of the American Standard Tooth Forms (20 degrees pressure angle full depth involute, 20 degrees stub involute, or 25 degrees full depth involute) of standard diametrical pitch.

4.42.2 Special type gears such as bevel or spiral bevel shall be finished, clearly marked, and installed as matched sets. All gears and reducers shall meet all applicable provisions of the current AGMA Standards and shall be of U.S. manufacturer as approved by the County. All drives shall be totally enclosed, oil lubricated type speed reducers.

4.42.3 All gears shall be mounted on shafts in accordance with applicable AGMA and ANSI Specifications.

4.42.4 All gears shall be mounted on shafts and bearing supports sufficiently rigid to maintain proper alignment under the most adverse load conditions.

4.42.5 Split gearing is not acceptable.

4.42.6 Overhung gears are not permitted except in the case of bevel pinions.

4.42.7 For bevel gears of any type, the face width shall not exceed 30 percent (30%) of the cone radius, and the gear ratio shall not exceed ten to one (4 to 1).

4.42.8 For spur and helical gears, face widths shall be as narrow as practical. Recommended maximum face width shall be equal to the pinion pitch diameter or 8 inches (200 mm),

whichever is less. Single reduction gear ratio of spur and helical gears shall not exceed ten to one (10 to 1).

4.42.9 Pinions of spur and helical gears shall have a sufficient number of teeth to prevent undercut. Minimum number of teeth in pinion, for 20 degrees full depth involute tooth form needed to meet this requirement is 18 when gear and pinion have equal addendums.

4.42.10 Long addendum pinion, short addendum gear of AGMA proportions may be used to reduce the minimum required number of teeth in the pinion without causing undercut.

4.42.11 In spur and helical gear sets the pinion shall be at least ¼ inch (6mm) wider than the gear in order to prevent loss of face width in the event of axial misalignment.

4.42.12 All miscellaneous items, such as keys and bolting, shall meet or exceed AGMA recommended practice.

4.42.13 All gears shall be machine cut and shall have the periphery and sides of their rims finished. The minimum quality of any gear shall be AGMA Quality Number 9.

4.42.14 All gears shall be free running, properly aligned, and shall have the appropriate amount of backlash according to AGMA and DIN.

4.43 GEAR MATERIALS

4.43.1 Pinions shall be harder than the mating gear by an amount appropriate to result in a "balanced" design. Pinions shall be cut from solid rolled steel or forged steel blanks. Pinions shall be through hardened (quenched and tempered) alloy steel, or surface hardened. Case carburizing, flame hardening and induction hardening are permissible hardening methods. Pinion steel chemistry, hardening method, core strength, hardening depth and rated horsepower of hardened pinions shall be appropriate for the service intended. Case carburized pinions and gears shall be finished ground after hardening. Minimum pinion hardness shall not be less than 300 BHN.

4.43.2 Gears shall be cut from solid forged steel blanks, rolled ring forgings attached or welded to a fabricated steel web and hub, or cast steel blanks. Cast, unfinished gear teeth are not permitted. Gears shall be quenched and tempered. Minimum gear hardness shall not be less than 240 BHN.

4.43.3 Gearing shall have suitable gear tooth protuberance when case hardened and ground. Fillet of ground gears shall not be ground.

4.43.4 All gear steels hardening methods shall meet ASTM, AISI and AGMA as appropriate.

4.44 STRENGTH AND SERVICE FACTORS FOR GEARS AND REDUCERS

4.44.1 Service Factors shall be as specified by AGMA, consistent with the duty and application but shall not be less than as stated herein or as shown in the table below.

4.44.2 No Service Factor shall be less than 1.0 (unity). Service Factor for rated thermal horsepower of any reducer shall be not less than one. Service Factors for strength and durability shall be no less than shown on the table below.

4.44.3 Gearing and bearing design loads will be based on F.E.M. 1.001 (latest edition) combined operating conditions which include inefficiency, 50% operating wind load, and specified speeds and acceleration/deceleration rates.

(1) Maximum operating loads for hoist motions (Main Hoist and Boom Hoist) shall be calculated per F.E.M., section 2.6.4.1. Maximum loads for horizontal motions (gantry, catenary trolley, and trolley) shall be calculated per F.E.M., section 2.6.4.2. Amplifying coefficient shall be per F.E.M requirements for state of loading, class of operation, and classification specified in Section 3.6.

(2) Mean load for calculating reducer gear and bearing life/size shall be per F.E.M, section 4.2.1.2 calculated by modifying the appropriate maximum operating load by the cube root of the maximum load spectrum factor for the specified state of loading. The load spectrum factor shall be per F.E.M. requirements for state of loading, class of operation, and classification specified in Section 3.6 (i.e., cube root of load spectrum factor .25 for state of loading L2, cube root of load spectrum factor .5 for state of loading L3).

(3) Safe working load for maximum and operating load calculations shall be based on continuous duty cycle rating of 50 LT.

4.44.4 Gear stress calculations and allowable stresses shall be based on AGMA standards (AGMA 21.01 latest edition).

4.44.5 Allowable stresses at FEM combined operating loads shall be per AGMA with service factors as below:

Minimum Service Factor (Mechanical) for Gears and Reducers

DRIVE	STRENGTH	DURABILITY
Boom Hoist	1.5	1.0
Gantry Travel	1.5	1.0
Main Hoist	2.25	1.5
Trolley Drive	2.25	1.5

4.44.6 Reducers shall be designed for no less than ten million (10,000,000) cycles except for the final reduction (low speed end) on any drive. Final reduction shall be designed for no less than one million (1,000,000) cycles.

4.44.7 Care shall be taken to appropriately determine all the factors that relate to both the strength rating and surface durability (pitting) rating of all gears and gear sets. They are: dynamic factor; overload factor (this shall be taken as not less than the service factor per the above table); size factor; load distribution factor; geometry factor, life factor (1.0 for 10,000,000 cycles); temperature factor; Factor of Safety (shall not be less than 1.0), surface condition factor (may be taken as 1.0), and hardness ratio factor.

4.44.8 In case of idler gears and other gears where teeth are loaded in both directions, the AGMA allowed design bending stress shall be multiplied by 0.70. This provision is also applicable to planet gears. Additionally, in planetary gear sets, the rated capacity shall not exceed 100 percent of the first planet gear plus 90 percent of the rated capacity of each additional planet gear.

4.44.9 All drives and reducers shall be capable of carrying a momentary or starting load of no less than 200 percent (200%) of FEM operating load and no less than maximum brake load.

4.45 GEARS

4.45.1 No open gearing will be acceptable. All gears shall be splash-oil lubricated and run on anti-friction bearings. High-speed gears shall employ helical gearing.

4.46 REDUCERS AND GEAR CASES

4.46.1 Each reducer shall be provided with a permanently attached nameplate containing the following information: manufacturer's name, reduction ratio, rated speed, rated capacity (horsepower), service factor, date of manufacture, model number, and recommended lubricant.

4.46.2 All gantry reducers shall be identical to allow interchangeability between all gantry reducer locations, waterside and/or landside.

4.46.3 All reducer bearings shall be of the anti-friction type.

4.46.4 Bearing life will be based on the appropriate mean operating load with design life equal to the maximum value of the range specified by F.E.M. 1.001 for the class of utilization specified in specification Section 4.1.5 (i.e., 6,300 hours for T5, 12,500 hours for T6, 50,000 hours for T8).

4.46.5 Reducer cases shall be of fabricated steel or cast steel. Cast iron gear cases are not permitted.

4.46.6 Reducer shall meet all provisions of AGMA 420.04 (Practice for Enclosed Speed Reducers).

4.46.7 Reducers shall be selected or designed giving full attention to overhung loads (amount, direction, and type). Appropriate Overhung Load Factors shall be used. If an overhung load is too large for a given reducer, then an out board bearing shall be used.

4.46.8 All gear cases shall be oil tight and horizontally split so that oil does not lay on a split line. The top section shall be easily removable for repairs and replacement of gears . Removal inspection plates shall be provided to permit inspection of all internal components. Fan cooled reducers shall be permitted in the machinery house enclosure only.

4.46.9 Gear cases shall be provided with easily accessible valve and drain plugs, breathers, means for checking the oil level, and lifting lugs on the cover. The reducers provided shall be as compact as possible and comply with all specifications and standards required herein.

4.47 SHAFTS AND AXLES

4.47.1 Shafts shall be designed in accordance with ASME Standards, and shall include acceptable allowances for stress concentrations at fillets, keyways, and lubrication holes.

4.47.2 All shafts shall be of hot rolled, cold rolled or forged steel; all grades used shall be properly heat treated for the service intended.

4.47.3 Cast steel shafts and axles are not permitted. Leaded steels are not permitted.

4.47.4 Particular attention shall be paid to shaft details and other factors which may adversely affect shaft fatigue strength. These details include the following:

(1) Shoulders shall have generous fillet radii.
(2) Relief grooves or other details shall be used (if required by the loads) where gears or wheels are heavy press fit or shrunk fit on shafts.
(3) Ends of keyseats shall be rounded.
(4) Splines, gear teeth, or threads shall run out smoothly or shall be undercut.
(5) Surface finish shall be as smooth as practical (or as required) and shall be free of injurious defects such as cracks.
(6) Shafting shall be heat treated, or otherwise processed to minimize residual tensile stresses on surface of the shaft.

4.47.5 All attachments to shafts which transmit torque to the shaft shall be attached in a positive manner. Acceptable methods are keys, splines, or bolts. Friction type clamps are not permitted.

4.47.6 Grooves for spring clips shall not be located in areas of shafts subject to bending loads.

4.47.7 Shafting shall be of sufficient diameter and supported in such a manner as to prevent harmonic vibrations.

4.47.8 Wherever possible, indeterminate support (3 or more bearings) for shafts shall be avoided.

4.48 KEYS

4.48.1 Recommended key style is square plain parallel stock. The recommended key size is approximately one fourth of the shaft diameter unless there are space limitations.

4.48.2 Allowable stresses for keys shall be in accordance with AGMA. Multiple keys may be used, however, the rated capacity shall not exceed 100 percent for the first key plus 50 percent for each additional key.

4.48.3 All keys shall be retained by a set screw or some other means.

4.48.4 All keys shall have a snug to tight fit.

4.49 SPLINES

4.49.1 All splines application shall meet provisions of AGMA unless otherwise noted.

4.49.2 Splines are an acceptable substitute for keys. Either square or involute splines are acceptable. Spline configuration, number of splines, and fit shall be appropriate for the service intended.

4.50 FASTENERS

4.50.1 All fasteners shall be correctly selected for size and type, and shall be suitable for the service intended.

4.50.2 All fasteners less than 12 mm (½ inch) in diameter shall be stainless steel.

4.51 BOLTS/ BOLTED CONNECTIONS

4.51.1 Structural and mechanical bolted joints shall be provided in accordance with the "Specifications for Structural Joints using ASTM A325 or A490 Bolts" or other County approved recognized international standard. Galvanized A490 bolts shall not be used. The surface of all plates or members intended to be joined together shall be in contact in accordance with AISC but no less than 75% over the whole area, and where stiffeners are necessary, they shall bear tightly both at the top and at the bottom. Prying action and bolt fluctuating stress shall be considered. The faying surfaces of all main structural friction-type bolted connections shall be machined. Access shall be provided to all bolted connection areas of the crane structure.

4.51.2 All bolts 12mm or less shall be stainless steel. High strength bolts shall not be galvanized. All bolts shall have a maximum of two to three threads remaining outside the nut after tightening. All bolted connections shall be designed to resist all loads and combinations of loads for "local" loads, with a Factor of Safety.

4.51.3 Design of bolted connections in structural type locations (hoist frames, etc.) shall be in accordance with AISC "manual of Steel Construction". However, if a different design criteria are to be used it shall be submitted to the County for review and approval of bolted connection design.

4.51.4 Bolted connections subject to vibration or where alignment is critical shall be secured per these standard specifications with approval of the County.

4.51.5 All bolt holes shall be spot faced unless the faces are already flat or finished.

4.51.6 In locations where bolts are inserted into tapped holes in the base material, the bolt nominal diameter shall not exceed the thickness of the base material, nor shall the tapped portion of the hole have a depth of less than an amount equal to nominal bolt diameter.

4.52 SET SCREWS

4.52.1 Set screws will not be permitted as the only fastenings or stops in any equipment that plays any part in the safety of the crane's operation. All set screws shall be headless with hex sockets and cone or cup points.

4.53 COUPLINGS

4.53.1 Except as noted herein, all flexible couplings shall be of the gear type, except those at the brake disks, which shall be elastomeric type. Gear couplings shall have crowned involute spline type engagement. Service Factor for all crane mechanical drives shall be not less than 2 for motor peak overload torque or brake torque, whichever is greater. All couplings shall have a Factor of Safety of 5 or greater based on the manufacturer's published breaking strength.

4.53.2 All couplings shall be fully guarded in accordance with OSHA with removable steel guards.

4.54 CHAIN DRIVE

4.54.1 If Chain drives are necessary, their use will require County approval.

4.54.2 Chains and sprockets of roller chain power transmission drives shall be designed in accordance with ANSI B29.1 or County approved equivalent internationally accepted standard. Maximum operating chain load including centripetal affects shall not exceed the 15,000 hour rated capacity of the chain considering appropriate application factors for number of sprocket teeth and type of driving and driven loads. Additionally, the minimum chain factor of safety against breaking strength at maximum operating load shall be no less than 10.0. Number of teeth on sprockets shall be no less than 19 and no more than 114. Minimum angle of wrap of chains around sprockets shall be no less than 120 degrees. Sprockets shall be machined steel and suitably hardened. Chain drives shall be properly aligned and lubricated.

SECTION 5

ELECTRICAL SPECIFICATIONS

This page has been left intentionally blank.

SECTION 5 - ELECTRICAL SPECIFICATIONS

5.1 GENERAL

5.1.1 The work covered by this section consists of furnishing all labor, material, and equipment to design, fabricate, assemble, transport, and install all required equipment and appurtenances of the Cranes' entire electrical equipment. The objective is to design the system for simplicity, maintainability, and maximum reliability, that is, it provides reliable power and control for rapid and precise handling of containers, general cargo and be suitable for use with a cargo beam (hook).

5.2 DESIGN STANDARDS

5.2.1 The following international standards shall be applied for the design, selection and installation of the electrical equipment:

(1) MOTORS AND ENCLOSURES

a) F.E.M. 1.001 3rd Edition 1987, 10.01 Power/Torque Requirements
b) V.D.E. 0530 - Rating
c) I.E.C. 34-1- Rating and Performance
d) NEMA - National Electrical Manufacturer Association

(2) ELECTRICAL INSTALLATION

a) NEC National Electrical Code
b) I.E.C. International Electrotechnical Commission
c) V.D.E. Regulations for the Erection of Power Installations (rated voltages <1000V)
d) I.E.E. Regulations for Electrical Installations

(3) CABLES

a) NEC National Electrical Code
b) V.D.E. Regulations for Cables and Flexible Cores for Electric Power and Lighting.
c) DIN 57281/VDE 0281 P.V.C. Cables in Power Installations
d) DIN 57282/VDE 0282 Rubber- Insulated Cables in Power Installations

5.3 MAINTAINABILITY

5.3.1 The crane drive and control systems manufacturer and supplier shall be ABB, GE, or Siemens as selected by County. The drive and control system comply shall with all severe duty requirements of dockside Cranes. The control system shall be based on the latest digital technology incorporated in power conversion equipment and include a programmable controller notwithstanding, despite the implementation of "Cutting edge" technology. Protective devices and safety features consistent with the best modern practice for container crane devices shall be incorporated, and all equipment designed to provide safe and reliable operation over long periods with a minimum of attention. The proposed system and equipment shall have thoroughly been used and proven durability and efficiency successfully.

5.4 GENERAL PROVISIONS

5.4.1 The control system for the Main Hoist, Main Trolley, Boom Hoist and Gantry drives shall be AC variable frequency/voltage, stepless, regulated, reversing and regenerative over the entire range of speeds. The system shall unless otherwise approved by County, utilize an IGBT active front end.

5.4.2 All electrical equipment shall be commercially and readily available in the United States of America.

5.4.3 All equipment shall be new and free from defects. The materials, equipment and workmanship shall conform or exceed to the applicable current standards of NEC, UL, IEEE, IPCEA, OSHA, AISE, NEMA, and ANSI.

5.4.4 In order to localize responsibility in the event of a system malfunction and to facilitate spare parts interchangeability, the Contractor shall utilize electrical equipment and parts that are commonly used by the Port of Miami and are readily available within 24 hours of written order and for ten (10) years after delivery and acceptance of each Crane at the Port of Miami.

5.4.5 All electrical equipment/component/part provided on the Crane(s) shall retain the original manufacturer's nameplate, bearing all pertinent data necessary for the replacement of the component, including model and part numbers.

5.4.6 Component of the electrical control system shall be of modular construction and shall employ plug-in printed circuit boards.

5.4.7 The Contractor shall be responsible for providing adequate sizes in all equipment to accomplish the work at the rated speeds, loads, and duty specified herein. The electrical equipment shall be selected for torque ratings, speed, and thermal capacity.

5.4.8 Adequate space and/or mounting surfaces shall be provided on the structure, in the electrical and other houses, in electrical enclosures, junction boxes, conduit, festoon systems and other cabling, etc., to accommodate the associated control circuits, future-automation, monitoring circuits and other additions and/or modifications (Easy and convenient access must be provided to all equipment and wiring).

5.4.9 All electrical equipment, including that required for programmable controllers, computers, digital drives, I/O devices, etc., shall be operable over the range of temperatures experienced at the Port of Miami, Florida.

5.4.10 All circuit boards and components shall be coated making them impervious to moisture and other corrosive environmental conditions.

5.4.11 Provide thermostat control for space heaters in enclosures. Provide switching for space heaters in motors to energize them when equipment is not operating.

5.4.12 All electrical enclosures and equipment shall be dust-proof, heated and shall be designed to resist deterioration from corrosion when subjected to severe moisture conditions in a marine environment. All fasteners (screws, bolts, washers and nuts) and fittings shall be of stainless steel.

5.4.13 The crane frame must be symmetrically grounded to the dock rails through spring-loaded grounding shoes at each gantry corner (4 required), and on at least one side of the main trolley to the trolley rails (at least one required). If trolley is grounded by way of festoon cable to the structure, no grounding shoes is required on trolley rail. Ground straps from the dock level grounding shoes across the equalizers to the crane frame shall be provided (4 required).

5.4.14 All sensitive electronic devices and inverter drives (including spreader cable reel, gantry cable reel drives) shall be installed in the air conditioned electrical control room unless otherwise approved by County. Systems must be properly wired and filtered with all communication via fiber optics.

5.5 POWER SUPPLY

5.5.1 The primary power supply shall be through use of a cable reel and Panzer Belt cable trench system. A secondary, auxiliary power supply shall be from fixed 480 volts power outlets on the water's edge of the wharf.

5.6 SHORE POWER PROVISIONS

5.6.1 The primary power shall be 13,200 VAC, 3 phase, 60 hertz. The Crane shall be supplied with one or more medium voltage drive isolation and auxiliary power transformers. The transformers shall be convection cooled dry type and designed for operation at rated KVA as defined in accordance with applicable previously noted standards. Transformers shall be 13.2 KV primary, with approved secondary voltages, 3 phase, 60 Hz to step down power from the line voltage to the voltages for: (1) the main hoist/gantry drives, boom hoist/trolley drives; (2) the 480 volt motor control center; (3) and all other electrical services. Provide space as required for the transformers in the boom hoist machinery house to be protected from the weather.

5.6.2 A minimum of two (2) 2½% full capacity taps above nominal voltage and two (2) 2½% full capacity taps below nominal voltage shall be provided at the tap board of each transformer. Insulation shall be selected for long life under specified operating ambient temperature conditions. Core-coil assembly shall be mechanically braced to withstand short circuit tests and verified by testing. Coil construction and bracing shall be designed for crane duty and shall prevent mechanical breakdown of insulation during short circuit.

5.6.3 Each drive isolation and auxiliary power transformer primary shall be protected against overcurrents and overloads utilizing overcurrent relays in conjunction with SF6 circuit breakers of adequate voltage rating and interrupting rating suitable for the maximum voltage and short circuit capacity of the terminal utility system. (Current limiting fuses shall be supplied when necessary to achieve the fault interrupting capability required.) If fuses are used, they must be properly coordinated with the utility feeder protection switchgear overcurrent relays. The medium voltage switchgear on board the crane shall also include detection and protection against undervoltage, overvoltage, ground fault, and phase loss. When SF6 circuit breakers are employed, they shall be equipped with low bottle gas pressure detection, alarm, and lockout. The lockout feature shall prevent closure of the breaker if low gas conditions exist. Each vacuum contactor/disconnect of SF6 circuit breaker shall be provided with visual indication that the device is closed, open, or tripped. If stored energy spring operators are employed, there shall be a visual indication that the spring is fully charted. A Square D PM820 Power Quality Meter (PQM) or County approved equivalent and transducer unit shall be provided which allows continuous, real time monitoring of:

(1) Line to line Voltages (A-B, B-C, C-A)
(2) Line Currents (A, B, C)
(3) Line Frequency
(4) Kilowatts
(5) Kilovars
(6) KVA
(7) Kilowatt-Hrs.
(8) Kilovar-Hrs.
(9) Kilo Demand
(10) Kilovar Demand
(11) KVA Demand
(12) Harmonic Distortion
(13) RS485 Communication Port for Crane Management System

5.6.4 Signals shall be provided from power quality monitor to the CMMS to enable monitoring of data from the power quality monitor.

5.6.5 Drive isolation transformers and auxiliary power transformers shall be supplied with grounded electrostatic shields and primary lightning arresters (GE Tranquell ZEP MOV type or equal). Each transformer secondary shall be provided with molded case circuit breaker secondary protection and appropriate ground fault equipment. Drive isolation transformer secondary neutrals shall be high resistance grounded with ground fault detection and protection. Auxiliary power transformer secondary neutrals shall be solidly grounded with differential current ground fault detection and protection.

5.6.6 The Gantry Cable Reel for power and communications through fiber optic cable shall be mounted on the waterside end of the right portal beam, see General Arrangement drawing in Section 9 of these Specifications for reference. The power cable shall feed from reel through a cable trench on the landside of the waterside crane rail. The cable through the trench shall connect to a below wharf power vault outlet through a cable horn as provided by the Port.

5.7 MAIN POWER CABLE REEL

5.7.1 The main power cable reel shall be a mono spiral type, as manufactured by Stemmann or County approved equal, with AC motor and inverter drive. The cable reel system shall be installed on the right side portal beam, looking from the backreach toward the water. The drive shall be installed in the electrical room.

5.7.2 One end of the power cable will be connected at a fixed outlet slip ring assembly for power and communications on the portal beam cable reel station. The other end will be able to be connected to the below wharf power vault and communication outlet.

5.7.3 All the constitutive parts of the cable reel system shall be protected against any kind of collision.

5.7.4 Gantry travel shall be 2,000 feet (610 meters) each side of the wharf's power cable feed termination point, for a total gantry travel of 4,000 feet (1,220 meters).

5.7.5 A multi-roller, radius cable guide mounted on the leg adjacent to the reel shall be provided to lead the cable from the reel down the leg in order to prevent whipping during gantry travel or high wind conditions.

5.7.6 A bi-directional multi-roller, cable guide (diverter) shall be provided at the wharf level so the cable can be retrieved from either direction parallel to the rails of the crane. The radius of all cable guides shall be as recommended by the cable manufacturer. The layer width of the cable reel body shall be adjustable in order to permit the matching of the reel to different cable sizes.

5.7.7 The following shall be observed;

(1) The torque of the system shall be adjustable.
(2) The cable reel system shall be equipped with the following interlocks:
(3) Slack cable
(4) Over tension
(5) Reel empty
(6) Over travel right (rotary can and direction sensing)
(7) Over travel left (rotary can and direction sensing)

5.7.8 The high-tension cable shall be Panzerflex or Siemens Protolon (SMK), as approved by County.

5.7.9 Platform and ladder access to the cable reel shall be provided. A local manual operating station shall be installed for maintenance and start up proposes at ground level by the cable guide (diverter).

5.8 POWER FACTOR CORRECTION

5.8.1 A power factor correction system shall be provided as required to meet local utility requirements, and as a minimum to ensure that the power factor does not fall below 0.9 lagging average over a 15 minute demand period at the point of common coupling (operating at 60% rated load).

5.8.2 Power factor correction and power factors shall comply with latest requirements of Florida Power and Light.

5.9 DRIVES

5.9.1 The crane shall be capable to perform main hoist and trolley or gantry and trolley operation simultaneously.

5.9.2 The main hoist, trolley and gantry shall be controlled by master switch(es). The boom motions shall be controlled by push button. The operator shall be able to increase or decrease the speed of the drives and change their direction by moving the master switches in the proper direction. The acceleration and deceleration shall be limited automatically to predetermined adjustable values.

5.10 POWER CONVERSION UNITS

5.10.1 The electrical drive system shall provide reliable power for the rapid, smooth, and precise handling of containers through the use of power conversion units controlling the AC motor(s) for main hoist, boom hoist, trolley, and gantry motions. The system shall be designed for maximum simplicity and maintainability.

5.10.2 The IGBT converter/inverter units for AC shall be provided by a manufacturer and of a type that has been in operation and successfully proven for a period of two years in a container crane operation. Contractor shall supply a list of such installations with the shop drawing submittals.

5.10.3 The IGBT converter/inverter units shall be designed to be capable of operating continuously with voltage fluctuations under any loading from no load to rated load in accordance with ABB standards. As a minimum, the units shall accommodate voltage fluctuations of plus or minus 10% at full capacity.

5.10.4 The IGBT converter/inverter units shall contain but are not limited to the following protective devices and functions:

(1) AC line over current protection for the conversion units shall be provided only through circuit breakers of a type which can sustain the continual over current tripping which may occasion this type of service without damage or a significant increase in interruption time. Contractor shall supply supporting information to the County's Representative within sixty (60) days after Notice to Proceed verifying that the interruption characteristics of the circuit breakers and fuses with respect to the over-stress characteristics of the power thyristors meets these requirements. The supplied information shall show that the protective devices adequately protect all power thyristors to which they may be subjected in the thyristor conversion unit, including standard bolted fault.

(2) Voltage transient protection shall be provided by properly rated metal oxide thyristors (MOVs) or other equivalent similar devices.

(3) Static, instantaneous over current protection shall be provided in each thyristor conversion unit.

(4) Static, instantaneous, single-phase, and phase-reversal protection shall be provided in each motor drive IGBT conversion unit.

(5) A temperature sensing devise shall be provided in each thyristor conversion unit to automatically interrupt the AC control power in the event that the heat sink temperature in the IGBT conversion unit rises above safe operating temperature.

(6) A static current limit override shall be installed in each IGBT conversion unit to limit current to some predetermined value. Provisions for different settings of current limiting with automatic selection shall be provided for different drives using the same thyristor conversion unit.

(7) A diagnostic panel, instruments, and meters shall be provided to facilitate maintenance and performance checking of the IGBT conversion units.

5.11 MAIN HOIST DRIVE

5.11.1 The main hoist drive shall consist of two (2) AC motors, driving a single gear reducer and two (2) hoist drums.

5.11.2 A pulse tachometer shall be mounted on the non-drive end of each motor, with the pulse information used for digital regulated speed control, and hoist position control functions.

5.11.3 Position limits shall be set in software and expressed in engineering units. Settings shall be protected by password security.

5.11.4 A four-circuit rotary limit switch driven by the hoist drum shall provide redundant signals for slowdown positions and resynchronize the pulse counting system and over travel stop function.

5.11.5 The drive shall provide field weaking concept or power optimization similar to DC drive under light load, operating at constant power. Acceleration and deceleration rates shall be independently adjustable. A current limit circuit shall limit maximum permissible torque.

5.11.6 The hoist shall be normally operated from the operator's cab by a digital master switch, which provides flexibility in generating a response vs. position characteristic, such as S-curve response. It shall provide rapid response with no time wasted on A/D (Analog/Digital) conversion. The master switch signals may thus be transmitted via the high-speed Master Field bus serial communication link to the main programmable logic controller.

5.11.7 The hoist shall have the capabilities to be operated at slow speed from the Dock Level Control Station. In addition, local control space shall be available for maintenance purposes at the converter, by-passing the programmable logic controller and subject only to hard-wired safety stops.

5.11.8 A load sensing system shall be installed which shall provide individual analog outputs from the main hoist dead ends. The sensor shall be located on the anti-snag hydraulic cylinders. Both hoists, main hoist motors shall be identical.

5.12 MAIN AND CATENARY TROLLEY DRIVES

5.12.1 The Main Trolley drives shall consist of one (1) AC motor for each drive; each motor shall be controlled by a single IGBT converter. A pulse tachometer located on the non-driven end of each motor shall generate a speed feedback signal, providing digital regulated speed control. A ramp generator shall control acceleration and deceleration ratings, and maximum permissible driving torque limited by a current limit circuit.

5.12.2 The Main Trolley drives shall have encoder positioning systems similar to the main hoist, except that proximity switches shall generate the redundant back-up signals and check signal. The drives shall incorporate a "Smart Slowdown" circuit similar to the Main Hoist.

5.12.3 The trolley shall be normally operated from the operator's cab by a digital master switch. In addition, local control shall be available at the converter, bypassing the programmable logic controller and subject only to hard-wired safety stops.

5.12.4 The Main Trolley drives shall be equipped with contactless slow-down switches and mechanically operated limit switches. The slow-down switches shall reduce the motor speed at a specified distance from the end positions at the outreach and backreach of the boom and main girder. Stop limit switches shall be used at a specified distance from the end positions as specified in Electrical Specifications herein.

5.12.5 The Main Trolley drives will be electrically interlocked with the Boom Hoist in a manner that will prohibit the Boom from being raised until the Trolley has traveled to landside passed the

boom hinged and the Trolley boom up stop limit switch. The interlocking will also prohibit movement of the Trolley until the waterside boom is in its operating position.

5.13 GANTRY DRIVE

5.13.1 The main hoist/gantry controls shall be interlocked on a first come-first served basis. The gantry drive shall consist of AC motors connected in a parallel connection. Control system features shall insure load sharing. Speed control shall be achieved by means of speed feedback. The gantry drive accelerating/decelerating ramps and current limit setting shall be independent of the main hoist drive. Mechanical limit switches provide the necessary position and protective signals.

5.13.2 The gantry drive shall be operated from the Operator's Cab or the Dock Level Control Station and also by local control at the converter.

5.13.3 The thermal capacity of the gantry drive shall be sufficient to assure that the gantry can travel a minimum of 304.88 m (1,000 feet) along the dock against the operating wind load and 198.17 m (650 feet) against a wind of 32m/s (71.6 mph) without injurious heating. Calculations shall be submitted for verification with compliance.

5.13.4 A pulse tachometer shall be installed on the non drive end of at least one gantry motor on each rail (landside and waterside) to provide speed feedback. All gantry motors shall be identical.

5.13.5 The gantry crane travel system shall drive 75 percent of the waterside wheels and 75 percent of the landside wheels. Gantry motor may be arranged vertically or horizontally as approved by County. Multiple gantry drives shall be synchronized to prevent skewing.

5.13.6 To avoid slipping of wheels of less loaded corners, the crane travel mechanism shall be equipped with a regulated drive with speed feedback. This further provides for accurate and sensitive positioning.

5.14 BOOM HOIST DRIVE

5.14.1 The Boom Hoist drive shall consist of an AC motor controlled by the Main Trolley drive, with a transfer circuit interlock operating on a first come – first served basis. A pulse tachometer shall be mounted on the non-drive end of the Boom Hoist motor, with the pulse information used for digital regulated speed control, and hoist position control functions.

5.14.2 The Boom Hoist drive accelerating/decelerating ramps and current limit settings shall be independent of the trolley drive.

5.14.3 The Boom Hoist position signals shall be generated by a drum driven rotary limit switch, with final over travel stops via lever type limit switches on the waterside pylon apex.

5.14.4 The Boom Hoist shall be normally operated from the boom hoist control station, but may also be operated by local control at the converter.

5.15 MOTORS

5.15.1 All motors, including main function motors, shall be totally enclosed and waterproof, (IP55 rating), with appropriate cooling provisions. NEMA or IEC motors are acceptable. UL listed motors are not required.

5.15.2 All wiring external to the motor shall comply with NEC. All electric motor brakes shall be totally enclosed and waterproof (IP55), except where housed in watertight enclosures or the Machinery House.

5.15.3 Covers on motor mounted brakes required to be removed for routine maintenance shall not weigh more than twenty (20) pounds and shall be easily accessed and removed by one person. Aluminum or aluminum alloys shall not be used for enclosures or windings.

5.15.4 All main function motors shall be of the same manufacturer, in order to facilitate maintenance and minimize spare parts requirements. The motors shall be made by a manufacturer with an excellent service record and a worldwide service organization with service available in close proximity to Miami. Main crane function motors shall be by a County-approved manufacturer. Where multiple motors are used for a system, all motors shall be identical for the purpose of simplifying spare parts requirements. For example, although all gantry motors may not have a tachometer attached, all gantry motors shall be identical such that they are physically interchangeable with each other either a motor with or without a tachometer. Type F insulation shall be used as a minimum. They shall be rated for inverter duty.

5.15.5 All motors and brakes shall be sized for torque ratings and thermal loadings of design requirements specified elsewhere and shall meet requirements of applicable codes and regulations.

5.15.6 Main Hoist, Boom Hoist and Main Trolley motors shall be mounted in the Machinery Room and shall be waterproof totally enclosed with continuous duty rating. Gantry motors, shall be waterproof, totally enclosed, with minimum of 60 minute duty rating.

5.15.7 The Control System Supplier shall formally establish motor warranty and post warranty agreements with a local motor repair vendor prior to Final Completion.

5.15.8 Waterproof motors shall be provided with suitable drain plugs and breathers as recommended by the manufacturer.

5.15.9 All motors shall have an energy efficient rating and shall be equipped with sealed anti-friction bearings designed to meet the requirements of thrust and radial loads and to provide a 50,000 hour minimum life expectancy, except fan motors which shall have a 100,000 hour minimum life expectancy. The use of motors with bearings requiring periodic lubrication shall be approved by the County for each specific case.

5.15.10 Thrust bearings shall be provided as required and shaft end play shall be limited to the clearance in the bearing. Motor bearings shall include resistance to damage due to induced currents in bearings.

5.15.11 All motors equipped with anti-friction bearings using pressure grease fittings shall have relief plugs so designed that grease cannot be forced into the motor windings.

5.15.12 Where motors are fitted with brakes or gears, if the design precludes the use of conventional wheel pullers, tapped holes or other means shall be provided for removal of brake or gear shall be provided. All motor connection box covers shall have at least four bolts.

5.16 BRAKES (GENERAL)

5.16.1 All motor brakes shall be fail safe, spring set, thruster operated AC type, with manual release, as manufactured by Bubenzer, or County approved equal. All brakes selected for use by the Contractor must be the standard product of the brake manufacturer, and be in current use in container handling equipment.

5.16.2 In normal operation, deceleration shall be accomplished by regenerative braking with motor brakes being applied when the motion has slowed (parameter to be adjustable) to essentially a stopped condition. All brakes, however, shall have sufficient torque and thermal capacity to stop any drive from the full load/full speed condition without motor assistance.

5.16.3 Brakes exposed to the weather shall have a minimum of NEMA-4X enclosures, with condensate drain installed at the low point, fabricated of stainless steel material as required for the marine environment.

5.16.4 Brake design and selection shall be generally in accordance with AISE Standard No. 6.

5.16.5 The brake manufacturer shall list the type and characteristics of lining used in the Main Hoist, Boom Hoist, Gantry, and Main Trolley brakes, and shall clearly state lining requirements in operation and maintenance procedure. No asbestos material will be acceptable.

5.16.6 All pins in brakes shall be of high strength bronze or stainless steel.

5.16.7 All brakes shall set immediately if control power is interrupted or if power failure occurs. The brakes shall be electrically interlocked to the control system as required in these specifications.

5.16.8 The Contractor shall properly torque and time rate each brake for its particular service. The brake duty rating shall not be less than the motor duty rating for that particular drive

5.17 MAIN HOIST BRAKES

5.17.1 The thruster operated motor disc brake shall have a release limit switch, automatic wear compensation and a self-centering feature.

5.17.2 Each main hoist motor shall be provided with a spring set, thruster release caliper disc brake as manufactured by Bubenzer type SB, or County approved equal. Each brake shall have a rating equal to at least 110 percent (110%) of the torque required when hoisting the maximum rated load at the shaft where the brake is mounted. Each brake must have the energy absorption capability to bring the hoist to a complete stop from the highest lowering speed with maximum crane load, under emergency stop conditions. The main hoist brakes shall include a manual release lever, brake released limit switch, automatic wear compensation and be self centering. Brake torque settings shall be clearly identified and accurately adjustable. The calibration of the adjustments shall be certified during the dynamic testing.

5.17.3 Redundant/auxiliary spring set, electro hydraulic released disk brakes as manufactured by Bubenzer (or County approved equal) shall be provided on the flange of the non-driven end of rope drum. These brakes shall be capable to stop the descent of the load at any point in its travel from over speed without any assistance from the motor brakes. There shall be at least two (2) main hoist drum (emergency) disc brakes (one for each drum), with a total torque rating no less than two hundred percent 200% of the maximum torque required to raise the load.

5.18 MAIN TROLLEY DRIVE BRAKES

5.18.1 The Main Trolley Drive motors shall each be provided with one thruster operated; spring set disk brake as manufactured by Bubenzer or as approved by County. The brakes shall be adequate to hold the Main Trolley with stowed wind load from the least favorable direction and have the thermal capability to stop the Main Trolley from rated speed with rated load. The braking torque of the brakes will be at least 200% of the motor rated torque. The Main Trolley brakes shall include a manual release and brake release limit switch.

5.19 GANTRY DRIVE BRAKES

5.19.1 Each gantry drive motor shall be provided with a spring set, thruster released caliper disk brake, as manufactured by Bubenzer as approved by County. The gantry brake shall be located between the motor and the reducer. They shall have a torque rating no less than 250 percent of motor rated torque, and shall have adequate thermal capacity to completely stop the crane while in gantry motion from the maximum rated speed, with a 32 m/s (71.6 mph) wind in the least favorable direction. Each brake shall be supplied with a watertight, easily assessable enclosure, and have auxiliary interlocks to prevent operation of the gantry unless all brakes are released. Brakes shall set after an adjustable time delay and shall be fitted with manual releases.

5.19.2 The brakes, if vertically mounted motors are used, shall be located no higher than 1.75 m above ground level for ease of maintenance. The brake cover shall be easily removable and have an access opening for quick manual release without the removal of any cover plate. The access opening cover plate may be hinged.

5.20 STORM BRAKES

5.20.1 Automatic caliper type storm (wheel) brakes as manufactured by Bubenzer or County approved equal, shall be installed on each of the gantry idler wheels. The brakes shall be capable of holding the Crane on wet rails at any location on the wharf, against a 40 m/s (90mph) wind load in the most adverse direction in conjunction with the holding power of 100% of the gantry brakes. The brakes shall be fitted with renewable shoes that bear on the side of the gantry wheels.

5.20.2 The storm brakes shall be capable of application with the Crane in motion without inducing severe dynamic braking loads in the crane and their dynamic braking torque shall be no less than the required static braking torque.

5.20.3 The control for the storm brakes shall be connected to the Crane control system to automatically set and release in conjunction with the motor brakes on the Crane gantry drive. The storm brakes shall release completely and permit gantry motion within 2.0 seconds after release motion of the gantry drive motor brakes is initiated.

5.20.4 The storm brake system shall have a selector switch on the operator's seat console, and, a selector switch and a Master Selector Switch in the Dock Level Control Station. The selector switch on the operator's seat console shall have three (3) different mode settings:

(1) Set – manually activates and closes all the brakes, locking all storm brakes.

(2) Auto – sets the brake operation to automatic as specified in this section and interlocked with gantry motion of the Master Switch handle and the anemometer.

(3) Open – manually opens (disengages) the storm brakes. This function is only enabled from the master selector in the Dock Level Control Station.

5.20.5 The Master Selector Switch in the Dock Level Control Station shall have two (2) different mode settings which shall control the mode of the selector switch:

(1) Manual – give manual control of the storm brakes to manually set/activate and closes all the brakes, locking all storm brakes and to de-activate and open all the brakes.

(2) Auto – sets the brake operation to automatic as specified in this section and interlocked with gantry motion of the Master Switch handle and the anemometer.

5.20.6 When the storm brakes are set in the "Auto" mode, the storm brakes shall automatically activate when the gantry drive motor brakes have been activated and set. The brakes shall be released when the operator initiates gantry motion by use of the gantry master switch handle controlled from the Operator's Cabin seat console or the Ground Level Control Station. The storm Brakes shall release prior to the Gantry Drive Motor Brakes release. The release mechanism shall be electro hydraulic (unless otherwise approved by County). Appropriate electrical interlocks shall be provided to assure that the crane does not gantry before the storm brakes and gantry motor brakes are released.

5.20.7 An adjustable time delay shall be provided to delay setting of the wheel brakes between 0.1 and 15 seconds for the following events:

(1) If control power is interrupted.
(2) If a power failure occurs.
(3) If the Emergency Stop push button is actuated.
(4) If the Master Switch for the gantry drive is returned to the "Neutral" position.

(5) When the master selector switch is actuated to the "Set" mode.
(6) Wind conditions are greater than 20 m/s (45 mph). The storm brakes shall be interlocked with the anemometer.

5.20.8 The stop time delay shall be sufficient for the gantry to come to a full stop from full rated speed, with no wind and an adjustable reserve up to 15 seconds. The intent of this is to prevent the storm brakes from setting while the gantry is traveling in any but the most extreme emergency operating circumstance. The time delay mechanism shall be pneumatic, hydraulic or mechanical in order to permit proper functioning upon loss of power.

5.20.9 Under an emergency stop situation the storm brakes shall be capable of dynamic braking. Upon activation of the emergency stop and after the motor brakes are fully activated, the storm brakes shall activate in a progressive force manner until full brake contact pressure is applied. The progressive contact pressure shall be applied to the wheels through an adjustable time period, 3s to 15s.

5.21 BOOM HOIST BRAKES

5.21.1 There shall be at least one boom hoist motor (holding) brake with torque rating no less than 200% of the maximum torque required to raise the Boom, and shall include manual release and brake release limit switch. The brake shall be a spring set, thruster released Bubenzer disk brake, or County-approved equal, and shall be mounted between the motor and the reduction unit.

5.21.2 In addition to the motor brake, there shall be provided, an auxiliary boom hoist drum mounted spring set electric or hydraulically released disk brake as manufactured by Bubenzer or County-approved equal. It shall be provided to stop the descent of the boom at any point in its travel from over speed without any assistance from the motor brake.

5.22 AUXILARY DRIVES (GENERAL)

5.22.1 Auxiliary single speed AC drive systems shall be provided to allow safe slow speed operation of various functions by maintenance personnel if a main drive or main power supply malfunctions. The auxiliary drives shall be configured for maximum reliability and safety and operate regardless of any main control system failure if electrical power from the main high voltage transformers is available or if the crane is powered by an external maintenance power supply. Mechanical drives of the emergency units may be mechanically disconnected from the primary equipment during normal crane operation, but, when needed, shall be capable of quick and convenient engagement by means of quick disconnect couplings or similar devices. The auxiliary drives shall utilize dedicated motors for each function, preferably with jaw clutch type couplings without chain drives. Each auxiliary drive motor shall be equipped with a motor mounted adequately sized disc brake which shall operate in conjunction with the primary brakes. Auxiliary drives for main hoist and boom hoist shall include appropriate over speed shut down features.

5.23 AUXILIARY MAIN HOIST DRIVE

5.23.1 An auxiliary main hoist drive system controlled from the Operators Cabin shall be provided to allow slow speed raising or lowering of full rated load if electrical malfunction of the main hoist drive system occurs. The system shall be capable of raising or lowering rated load at 2.5% of rated load speed and shall have adequate thermal capacity to perform one operation of raising or lowering (one direction only) rated load the total lifting height of the crane (sum of maximum spreader height above rails plus maximum depth below rail) without overheating or thermal shutdown.

5.24 AUXILIARY BOOM HOIST DRIVE

5.24.1 An auxiliary boom hoist drive system controlled from the Boom Control Station shall be provided to allow slow speed raising or lowering of the boom if electrical malfunction of the main boom hoist drive system occurs. The system shall be capable of raising or lowering the boom between the operating position and the stowed position in no more than thirty (30)

minutes and shall have adequate thermal capacity to perform one operation of raising or lowering the Boom (one direction only) between operating and stowed position without overheating or thermal shutdown.

5.25 AUXILIARY MAIN TROLLEY DRIVE

5.25.1 Auxiliary drive systems controlled from the Operator Cab shall be provided to allow slow speed Main Trolley travel if electrical malfunction of the primary drive systems occur. The systems shall be capable of travel at 2.5% of rated speed and shall have adequate thermal capacity to perform one operation of travel between maximum backreach and maximum outreach (one direction only) without overheating or thermal shutdown. Control for the emergency trolley drive shall be located in the Operator's Cab.

5.26 CONTROLS

5.26.1 It is the intent that a uniform electrical control system manufactured by a County-approved manufacturer of electrical container crane controls be provided. The system shall be, at the choice of the County, the latest state-of-the-art digital AC adjustable voltage/frequency control system as manufactured by ABB, GE or Siemens.

5.26.2 The drive system supplier shall complete a power system analysis. The study shall include power flow, voltage drop and short circuit calculations to be used in selection of the crane power distribution equipment and coordination with the terminal power distribution system contractor and utility company. The results shall be submitted to the County within ninety (90) calendar days after Notice to Proceed.

5.26.3 In addition, the drive system supplier shall perform an arc flash study verifying compliance of the Crane(s) with applicable arc flash requirements of OSHA, NEC and NFPA 70E.

5.26.4 In general the control system shall include the following equipment:

(1) Digital direct power conversion units for variable speed control of all Crane functions.

(2) Programmable logic controllers with user-friendly ladder diagram programming for drive coordination and sequencing or other County approved programming.

(3) County approved network for remote input/output data collection and communication bus link to master controllers.

(4) User-friendly diagnostic system.

5.26.5 For each Crane, one set of all instruments, test devices, monitors, computers, and other devices required for control system diagnostics, crane production data, troubleshooting, or maintenance shall be provided. This quantity shall include all devices and software necessary to upload, download, or change software.

5.26.6 The Contractor/control system supplier is responsible for supplying any other devices required for reliable, safe, and efficient Control of a Crane(s) meeting the intent of these Specifications.

5.26.7 The control system supplier shall be required to attend at least the first two design review meetings to facilitate communication and coordination.

5.26.8 The control system supplier shall have responsibility to review the design and installation of the entire Cranes' electrical system and certify to County that the design and installation are in conformance to the drive requirements, and shall have within their scope all parts, components and systems that affect performance of the drive system.

5.26.9 The Contractor shall submit electrical system installation drawings of sufficient detail to facilitate the evaluation/certification by the control system supplier. The electrical system installation documentation shall include the following as a minimum:

(1) Wire and Cable Pulling Schedules indicating destinations, type of cable or wire, wire and cable sizes and ratings and raceway routing.

(2) Cable and wire specifications that provide complete descriptions of insulation systems, configuration, vendor part numbers, wire sizes, ampacity, etc. so the wire and cable can be properly evaluated.

(3) Breaker schedule including breaker ratings.

(4) Electrical equipment arrangement drawings showing locations and mounting methods.

(5) Raceway (conduit, cable tray, etc.) layouts that indicate arrangement and location on the crane, barrier and cover design details, and wire and cable content in each raceway by notes or reference to cable and wire pull numbers in the cable and wire pulling schedule. All cable trays shall be detailed as to the overall dimensions including indication of the separation distances between isolated sections in the cable tray.

5.26.10 The above electrical system documentation shall be submitted to the control system supplier and County for review at least six weeks prior to manufacture/assembly.

5.26.11 The electrical drive system for Main Hoist, Boom Hoist, Main Trolley and Gantry motions shall provide reliable power for rapid, smooth, and precise handling of containers through the use of AC variable voltage/frequency power conversion units controlling AC induction motors. The system shall be designed for maximum simplicity, maintainability and failsafe operation in the case of any one failure. An automatic control system shall be provided for main hoist motion to provide a continuous load vs. speed curve of approximately constant horsepower throughout the speed range of the hoist. The systems shall be fully regenerative into the power grid and safely regulate zero speed. Control of the load limited main hoist speed shall be regulated by internal drive current feedback, (not via external load cells).

5.26.12 Protection against loss of motor regenerative capability shall be provided in all hoist control systems. The circuit shall sense any difference between reference speed and actual speed and in such a case initiate a controlled shutdown of the drive. The torque-proving circuit shall be provided to prevent release of the motor brakes unless the motors are developing torque to control the load based on current and voltage feedback.

5.26.13 All main functions shall be provided with a pulse (digital) tachometer feedback (speed feedback). At least one motor controlled by the drive shall provide tachometer feedback to that drive.

5.26.14 Control of Main Hoist, Boom Hoist, Main Trolley and Gantry motors shall be stepless, digitally regulated, and regenerative over the entire operating range of the equipment and shall be failsafe from any one (1) failure.

5.26.15 Master switches shall be either inductive or digital without sliding contacts. The operator shall be able to increase or decrease the speed of the drives and alter their direction by moving the master switches in the appropriate manner.

5.26.16 The acceleration and deceleration of the drives shall be under the control of the operator, except that if the operator moves the master switches rapidly, acceleration and deceleration shall be limited, automatically to predetermined adjustable values. The linear time ramps for the Main Hoist, Boom Hoist, Main Trolley and Gantry motions shall be asymmetrical and independently adjustable for acceleration and deceleration times. The deceleration time shall be less than the specified acceleration time and shall be based on the motor/drive system's capabilities. All ramps shall have capability for adjustable rate of change of both acceleration and deceleration independently. When the operator moves the master switch toward the "off" position, the motion shall be slowed electrically. The speed of all motions shall be infinitely variable from full speed through zero to full speed in the opposite direction with no dead band.

5.26.17 The controls shall electrically stop all drives on motor torque before setting brakes. Normal holding brakes for the Main Hoist, Main Trolley and Gantry shall set after independently adjustable time delays (0-30 seconds) in the PLC, when the master switches are returned to the off position. The control circuits shall be so designed that all brakes are delayed in setting during normal operation until the associated motor has stopped (zero speed) by means of regenerative braking with energy dissipated back to the power grid, at which time the adjustable delay shall begin. Motor torque shall be maintained until the brakes have set. If the control power has been removed for any reason, all brakes shall set immediately.

5.26.18 Brake control relays shall be adequate to extinguish the arc upon opening under all operation conditions. Under some operating conditions, Main Hoist, Boom Hoist, Main Trolley and Gantry brakes will be maintained in the released mode by timers or controls when the associated drive is at zero speed.

5.26.19 All crane motion initiated by master switches shall have an independent backup circuit which monitors motion of the master switch and the corresponding crane movement - sometimes referred to as a "tach loss" circuit. If a preset error difference is exceeded, a fault shall occur, the motion shall stop, and the brakes shall set.

5.26.20 The time between the initial movement of any master switch and the start of rotation of the corresponding machinery shall not exceed seven tenths of a second for the Main Hoist and Boom Hoist drives and shall not exceed four tenths of a second for the Main Trolley and Gantry drives.

5.26.21 The hoist drive shall operate without steps in the constant horsepower range.

5.26.22 Each power conversion unit assembly shall be selected using the following criteria, as a minimum:

(1) The nominal current rating of the assembly shall exceed the RMS current of the motor as determined by the theoretical duty cycle.

(2) The continuous current rating of the assembly shall exceed the motor current required to lift rated load.

(3) The 60-second current rating of the assembly shall be 150% of the required RMS current as determined by the theoretical duty cycle.

(4) The 10-second current rating of the assembly shall exceed the current limit setting established to meet the acceleration and deceleration rates required by these Specifications.

(5) All the above ratings shall be based on the maximum specification design ambient temperature.

5.26.23 All power wiring termination shall be brought to terminal studs or bus bar flags mounted at the bottom of the control panel. Control wiring terminations shall be mounted in the control cabinets such that they are easily accessible and at a comfortable working height. In no case shall external power or control connections be made directly to drive control units.

5.26.24 The programmable logic controllers furnished shall allow register values to be changed, inputs and outputs to be forced on or off without halting the machine process or editing the program. All functions shall be connected to the drive controller, and communicated to the programmable logic controller via a local area network.

5.26.25 All terminal blocks, wires, conduit space, and cable tray space shall have 15% spares provided, with a minimum of 1. Power cable for gantry motor shall have one spare (minimum) provided in each gantry leg, to be reviewed to a mutually agreeable solution in the design review phase. The requirement for conductors and conduit fill will be reviewed on a case by case basis and applies to all runs outside the Machinery House. Spare wires or cables directly into a component or spare terminal blocks inside a component are not necessary.

5.26.26 Provide drive enclosures with master circuit breakers or isolation switches that will de-energize all electrical components in the cabinet.

5.26.27 Arrange each drive cabinet to provide access to the power conversion unit assembly without moving or removing other regulator components.

5.26.28 Convenient means shall be provided to electrically isolate all motor circuits from regulator and converter circuits for maintenance and troubleshooting.

5.26.29 Hoist/gantry controls shall be interlocked on a first-come, first serve basis. Gantry motors shall be driven by both main hoist drives with each drive controlling half of the motors on each rail (landside and waterside). Main hoist and trolley motions must be capable of operating simultaneously at full performance (full rated load, full rated speed, and maximum acceleration).

5.26.30 The drive must be organized such that problems can be resolved by replacement of drive modules (boards) which are interchangeable, as much as possible, between all motions on the Crane.

5.26.31 The control system shall incorporate a state-of-the-art County approved programmable logic controller using ladder logic or County approved equivalent for general crane control, interlocking, and sequencing except for emergency stops and end of travel circuits. Emergency stops and emergency end of travel stops for all motions in all directions shall be hard wired external to the controller. The PLC cabinet shall be a separated unit.

5.26.32 Where applicable, remote I/O blocks shall be installed to reduce electrical components and wiring. For the Operator's Cab, remote I/O shall be located in the Operator's Seat console. Any instruments or equipment required to test or configure I/O blocks shall be provided; one complete set of required equipment shall be provided for each Crane.

5.26.33 Computer(s) with the required software installed for programming and troubleshooting shall be provided with each crane control system. An appropriate color printer, storage case (if removable), program disks, instruction manuals, etc. shall be included for each crane. Acrobat shall be installed on the computer.

5.26.34 The electrical control system shall have an integral diagnostic system which will provide integral monitoring, and diagnostics. All diagnostic messages and status data shall be user-friendly and programmable.

5.26.35 All data and calculations shall be displayed, stored, and/or performed only in the standard English system units.

5.26.36 The drives shall have the capability of operating at reduced power after the failure of a single power conversion unit in the active front end, or in the hoist. A selector switch shall be mounted on the control panel that allows selecting the operating mode for the function and that automatically modifies or recalibrates the PLC parameters and logic for the selected mode.

5.26.37 The drive control panels shall be equipped with filtered fans that circulate the air and cool the panels by bringing in outside, cool air from the electrical house. The entire electrical house shall be cooled by two separate, thermostatically controlled air conditioning units, each capable of maintaining 65° F inside the electrical house under all operating conditions. All control panel openings and/or access doors shall be gasketed. An interior electric light will operate when the cabinet door is opened and shut off when the door is closed. Standard electrical outlets with ground protection shall be provided in each section (120 VAC).

5.26.38 The AC motor control centers shall be NEMA Class II, Type B with dead front end. The motor control centers shall consist of vertical sections constructed of sheet metal meeting UL gauge specifications and suitably reinforced to provide a rigid free-standing structure. Each section shall have a vertical trough for wiring. Each motor control center shall have a full capacity,

horizontal, main three-phase bus rated at no less than 600 amperes continuous. The main bus shall extend through all vertical sections. Wiring shall be not less than14 AWG stranded with THHN 600 volts, 90° C thermoplastic insulation. Ten percent (10%) additional terminal points shall be provided for spare control wiring tie-points. Plug in type terminals will not be accepted.

5.26.39 Motor starters shall be circuit breaker combination type, one spare convertible auxiliary contact, and three (3) ambient compensated overload relays.

5.26.40 The lighting transformer shall not be included in the motor control center and provisions shall be made for dissipating the heat generated.

5.26.41 Each control panel compartment shall be furnished with an engraved nameplate describing the appropriate function(s) of the compartment.

5.26.42 An auxiliary control panel which houses the main disconnect, spreader hydraulic pump controls, protective devices, cab air conditioner, trolley lighting contactor, windshield wiper DC supply, remote programmable controller unit and spreader controls shall be installed in the operator's cab. Space heater shall be provided. In order to provide suitable noise immunity, the communication link between the cab remote I/O unit and the PLC in the e-house shall be via a fiber optic cable.

5.26.43 A transfer switch shall not be used to transfer control power to or from any station. Beginning with "Control Off", pressing the "Control On" push-button at any station shall transfer control power to that location.

5.26.44 The manufacturer of the electrical drive shall have representation and service facilities in the Southeast Florida area and parts for repair or replacement shall be readily available in the U.S. within twenty-four (24) hours.

5.26.45 Blowout coils for AC contactors shall be sized for the load on the contactor.

5.26.46 All motor control devices are to include starters, circuit breakers and loop contactors and shall be of an industrial type as approved by County.

5.27 PROGRAMMABLE LOGIC CONTROLLER (PLC)

5.27.1 The Crane shall be provided with a PLC supplied by the drive system manufacturer as approved by the County. The PLC shall collect data from monitoring and operating devices on the Crane, provide the logic sequence control for the Crane, communicate with the digital converters and remote I/O via a latest field bus technology, and furnish data to the Crane Monitoring and Maintenance System (CMMS) via latest technologically advanced system. The PLC hardware shall be mounted in a NEMA 12 dust tight enclosure and include a CPU(s) power supply, communication modules, I/O cards, connection boards, internal light, space heater adequate cooling system and 120V receptacle.

5.27.2 Fifteen percent (15%) of spare digital I/O points shall be provided. All digital outputs shall have fuse protection. Communication between the PLC and any remote I/O units shall be through the use of fiber optic cable. The fiber optic cables must be of standard use, and be available in Southeast Florida.

5.27.3 The drives and PLC must be easily reprogrammable in the field by the CMMS computer in Control Room and by the mobile laptop provided in the case the CMMS computer fails. Remote monitoring station shall only have monitoring and report writing capabilities. Burn in of custom chips for PLC control is not acceptable. The monitoring from the remote station shall be an option that can be disabled at the main CMMS in the electrical house.

5.27.4 Monitoring and diagnostic stations for the CMMS shall be provided for the control of the PLC's programs. One (1) industrial type desktop PC and one (1) mobile industrial laptop computer or equivalent shall be provided with all necessary hardware and software with each Crane.

5.28 CRANE CONTROL FAULT DIAGNOSTICS

5.28.1 The CMMS shall provide a complete platform for collecting, monitoring, displaying, analyzing, editing and distributing all pertinent data on the crane. The diagnostic system program shall operate in a multi-tasking environment, so that the diagnostic data collection continuous while other tasks are being performed. Diagnostic system program shall provide display screens that can be customized to a specific user's requirements. The CMMS shall have the capability to monitor, record and present Crane productivity data such as containers moved per shift, containers per hour per shift, average weight of container moved, maximum weights of container moved, average wait time between moves, maximum wait time between moves, etc. The Crane Control Fault Diagnostics and Control System supplier shall be the same as the drives and control system manufacturer or equal.

5.28.2 The Crane(s) shall be provided with monitoring and diagnostics stations as required by this specification. The monitoring stations shall have advanced Crane diagnostics Crane Monitoring and Maintenance System (CMMS) as approved by County. The Crane control system and equipment shall be a minimum Level 5 Diagnostics System that includes advanced diagnostics, Crane production monitoring, data logging, preventative maintenance data logging and alarms.

5.28.3 Monitoring and diagnostic stations shall be provided in the Control Room of the E-House, Dock Level Monitoring Station and Operator's Cabin. The Control Room monitoring station shall include the following equipment or County approved equal:

(1) NEMA 12 dust-tight enclosure and air conditioned
(2) Latest PC and CPU technology available
(3) Minimum 500 GB HDD
(4) 3 ½" floppy drive
(5) DVD/CD-RW
(6) Video card
(7) Network card as required
(8) Minimum 17" SVGA HD color monitor
(9) Keyboard, Logitech mouse and pad
(10) Latest Windows OS as approved by County
(11) Crane Monitoring and Maintenance System (CMMS) as approved by County
(12) PLC Programming Software Installed
(13) PLC Network Card and Cable
(14) Wireless hardware Norton 360 or equivalent
(15) Hard Disc Backup/Restore Software
(16) Acrobat software
(17) Laser Jet Printer
(18) Uninterruptible power supply (by APC or County approved equal)

5.28.4 The monitoring stations located in the Ground Level Monitoring Station and Operators Cabin shall have monitoring functions only.

5.28.5 All computer software with the exception of the crane diagnostic proprietary software shall be off the shelf software, upgradable. All software licenses must be provided to the Port at the time of the Crane delivery to the Port of Miami.

5.28.6 The requirements of the CMMS shall be as follows;

(1) The CMMS shall be housed in free-standing floor-mounted industrial computer unit/rack and installed in the air-conditioned E-House Control Room within the Machinery House on the Crane.

(2) The system shall have the capability of monitoring drive functions, storing data, and plotting of at least six (6) curves simultaneously. It shall be capable of storing two crane cycles of at least five (5) parameters such as speed reference, speed feedback, voltage feedback, load cell versus time in sufficient detail to be capable of analyzing and

troubleshooting the drives, etc. The system should be able to collect global data from the whole system data base including drive system, I/O, etc. This shall eliminate the need to introduce strip chart recorders to troubleshoot the drives.

(3) The system shall be capable of storing, displaying, printing the fault log of at least 200 fault events, graphically displaying the status, display position of all crane drives and motions for which there is state or position sensing. It shall display which station and drive is in control and the status of that drive. Should a fault develop, in addition to the listing of the fault that caused the shut down, it shall direct the viewer through the fault tree to the source of the fault.

(4) The system shall record and update files listing the running time of the crane and each of its drives. It shall provide and store files listing total elapsed hours at the end of each day.

(5) A cab mounted operator display screen shall be provided for the viewing of the crane operator and/or maintenance personnel. The screen shall display a series of messages which shall illustrate the status of the various drive, functions and accessory systems on the Crane. It shall list the weight of the load suspended, the wind speed, and any active faults. The user/operator shall not be capable of making any changes to the Crane system from this terminal.

(6) The monitoring system shall display and store fault diagnostic data to assist the maintenance personnel in rapidly resolving faults. Fault listings shall clearly indicate the first fault, time and date of each event. Printed reports shall contain crane designation headers on each page. As a minimum, faults to be displayed and specifically identified shall include:

a) Motor over-temperature
b) Motor timed over-current
c) Motor over speed (main hoist and boom hoist and trolley gantry too)
d) Motor ventilation loss (blower ventilated motors)
e) Drive instantaneous over current
f) Drive circuit breaker trip
g) Drive blown fuse trip (armature)
h) Drive open IGBT
i) Drive Shorted IGBT
j) Drive over-temperature
k) Ground fault (transformer secondary)
l) Under voltage
m) Phase sequence
n) Brake Failure
o) Drive board failure
p) Reference/Speed mismatch
q) Overload
r) Snag load
s) Emergency stop push-button operation (identify push-button location)
t) End over travel limit switch operation
u) AC phase loss
v) CPU low battery
w) Loss of DC power supply, if applicable
x) Remote I/O failure
y) High wind warning
z) High wind alarm
aa) Gantry stowage pins
bb) Trolley stowage pins

5.28.7 The monitoring system shall maintain a 16 variable data messages available including the messages listed below that shall be updated real time:

(1) Control power on hours

(2) Main Hoist elapsed time hours
(3) Main Hoist elapsed time with load (twist locks locked)
(4) Main Trolley elapsed time hours
(5) Catenary Trolley elapsed time hours
(6) Gantry elapsed time hours
(7) Boom Hoist elapsed time hours
(8) Net run time hours
(9) Main Hoist position
(10) Main Trolley position
(11) Boom position
(12) Catenary Trolley position

5.28.8 The following display screens shall be included:

(1) Status real time, overall crane
(2) Status real time, individual motions
(3) Status real time, subsystems
(4) Faults/alarms
(5) Warnings
(6) Permissive interlock status
(7) Event Summary
(8) Event Trouble-shooting screens
(9) Line diagram dynamic view
(10) Limit switch dynamic view
(11) Spreader dynamic view
(12) Real time graphics signal level charts
(13) Historical trend charts
(14) Crane utilization reports
(15) Maintenance schedule reports
(16) Production reports
(17) Access control

5.28.9 On-site screen modification and development by County shall be available; analog and digital data collected by CMMS may be logged or copied to a floppy disk, CD-ROM, DVD-RW, MS Access and MS Excel as approved by County.

5.28.10 In addition to the required CMMS stations, the system shall be expandable to permit additional monitoring stations or terminals at other locations on the crane or at a remote site.

5.28.11 The systems shall be capable of future communication with off-board computers, such as located at maintenance office or operations maintenance scheduling and parts accountability. All monitoring and maintenance functions of the CMMS shall be available at the off-board computer except for PLC program development.

5.28.12 The mobile industrial laptop shall incorporate at a minimum, the following requirements as approved by the County;

(1) Latest CPU, motherboard and memory technology available
(2) The most Memory able to
(3) 15" TFT screen be installed
(4) Latest modem technology
(5) DVD/CD Read/Writable
(6) Floppy drive
(7) keyboard and pointing device (mouse)
(8) Latest Windows OS the same as used on PC
(9) PLC Programming Software Installed
(10) PLC Network Card and Cable
(11) Wireless hardware

(12) Adobe Acrobat
(13) Software and cable to load Operator Interface Panel applications
(14) Hard Drive Backup/Restore Software
(15) carrying case
(16) required electronic appurtenances for mobile communications

5.29 WIRING AND CONDUIT

5.29.1 Conduit

(1) All conduits, appurtenances and fittings including exposed threaded sections shall be coated to prevent any type of corrosion. Any galvanized components of the conduit system that becomes exposed through drilling or threading, shall be coated as required by applicable code after exposure to prevent any future corrosion of any type.

(2) All conduits shall be rigid, heavy wall, galvanized steel, minimum ¾ inch and UL Listed. Conduits shall be concealed and fastened inside the box framing of the crane structure where non sealed structures are used. Conduits shall not be run on the exterior sides or top surface of the sill beams. Conduits may be run on the exterior surface of the bottom side of the sill beams. External conduits on other members shall not be located where they might be damaged by swinging containers or vehicle traffic. Exposed conduit runs shall be watertight, clamped to Kindorf channel at intervals not exceeding six feet, mounted in such a way to permit proper painting of structure and brackets beneath conduits, and shall be run parallel or perpendicular to walls, structural members or intersection of vertical panels and ceilings with right-angle turns consisting of cast-metal fittings or symmetrical bends. Offsets in conduits shall be avoided where possible but when necessary, bends shall be made with approved conduit bending machine in accordance with NEC standards when necessary.

(3) Conduit straps shall be of stainless steel fabrication. Threadless-type fittings shall not be used. Approved pipe-compound tape shall be used on all joints. Flexible conduit shall be synthetic-jacketed, spirally wound, galvanized steel, and shall be oil-proof, weatherproof and not over four (4) feet in length.

(4) Conduit fittings shall be cast ferrous metal, corrosion resistant finish, of size, shape and proper tapping to suit conditions.

(5) Conduit entrances to all panel boards, junction boxes, pull boxes or cable and wire gutters, etc., exposed to the weather shall be from below, and shall be properly sealed from water and weather intrusion under hurricane wind pressure conditions. Conduit entrance for Boom limit switches, etc. should be from the bottom while boom is in the "up" stow position.

(6) All external junction boxes and cable trays exposed to the South Florida environment shall be constructed high grade stainless steel as approved by the County. Internal cable trays not directly exposed to the South Florida environment shall be Hot Dip Galvanized type.

5.29.2 Wiring

(1) All wiring shall be provided by an U.S. manufacturer or equal specifically approved by the County.

(2) All wiring used on the crane, except as otherwise noted, shall be 600-volt stranded copper. Wiring for power and lighting shall be type THNN rated 90° C and shall be no smaller than 12 AWG stranded copper. Wiring in panels for relays, contactors, resistors and special equipment shall be sized by the manufacturer. All wiring (power and communications) shall be of United States manufacture.

(3) Wiring in control panels, panel boards, gutters and junction boxes shall be neatly bundled and laced, and sufficient extra wire length shall be allowed to permit the transfer of circuits or reconnection of wiring.

(4) Wiring of AC power and AC control as applicable shall each be adequately separated and isolated from each other to avoid induction of currents and feedback circuits.

(5) All programmable controller communication shall be performed thru all fiber optical cables. Intercom and other communication wire shall be isolated throughout from all other conductors and shall be shielded and twisted pairs or fiber optical cable or wire. All fiber optical cables and wires shall have their own junction boxes and conduit.

(6) All conductors of wire size 12 AWG and smaller diameter shall be terminated at terminal strips in accordance with ABB standard. All conductors of wire size 10 AWG and larger diameter shall be terminated at terminal strips having screw-type terminals with self-insulated ring-tongued, pressure-indented, solder-less lugs or terminals. Terminals and splices shall have tin plated copper body, extra wire support sleeve and insulation sleeve. Installation shall be made with matching ratchet-type tools as approved. Set screw-type or bolted pressure type terminals shall be use for larger conductor sizes. All conductors on the crane, both inside and outside the control panels with the exception of ribbon cable, shall be labelled at both ends and shall match the schematic diagrams. Terminal blocks shall have the same label markings as the wires connected to them.

(7) High-voltage splices and terminations shall be with materials as recommended and supplied by the cable manufacturer according to NEC or the approved applicable code. Splicing procedures shall be in accordance with recommendations for the voltage, rating and type of cable used in the installation.

(8) All taped joints shall be given two (2) coats, G.E. No. 1201 Glyptal or approved equal.

(9) All motor conductors shall have isolated circuits throughout. Common or grounded conductors shall not be used.

(10) All motor conductors shall be terminated and interconnected at terminal blocks located in the main control enclosure in the electrical house.

(11) All conductors to the operator's cabin control consoles shall have a minimum of four (4) feet of slack.

(12) Portable cords or cables shall be rated at 600 volt and be type SO for gauges 10 AWG and smaller, and type W for 8 AWG and larger.

(13) Wiring and connections in solid state electronic equipment as used for interlocking controls, fault diagnostics and microprocessor communication shall be suitable for their environment on-board the crane. If necessary, provisions must be made to isolate the equipment from the hostile surroundings, and South Florida marine environment.

(14) Low voltage wire in conduit or cables shall be type THHN, multi-conductor, multi-strand control cable, 600 volts insulation, rated 90° C temperature rise. The ampacity of each conductor shall be de-rated as prescribed in the NEC. Conductors shall be color coded and numbered in addition to the marking sleeves specified. Cables shall have approximately 10 % spares connected to identified spare terminal blocks.

(15) Computer and PLC shall have 100% spare communication cables, having the largest gauge wire that is compatible with the hardware used.

(16) (the PLC and I/O circuits should have equipment ground) AC common wiring shall be isolated from each other. The NEC color-coding scheme shall be used for DC and AC power wiring, control power wiring and accessory power wiring.

(17) Wiring for contactors and relays shall be rated at least the ampacity of the devices to which wiring is terminated.

5.29.3 Wiring Devices

(1) All AC switches, receptacles and cord connectors shall be "Specification Grade" with switches being rated 20 ampere, 125 volts, and receptacles rated 20 ampere, 125 volts. All switches and receptacles shall be installed in NEMA 4 enclosures made from the highest corrosion resistance material available for the marine salt water environment of South Florida and have screw caps and gaskets.

(2) All switches, receptacles and cord connectors shall be provided by an U.S. manufacturer or as specifically approved by the County.

5.30 SPREADER REEL AND CABLE (Trolley to Headblock)

5.30.1 A spreader cable reel with inverter drive as supplied by Stemmann or County approved equal shall be provided on the Main Trolley. The inverter shall be installed in the Drives Room of the E-House. The spreader cable reel shall be properly integrated with the crane control system to allow for drive fault and diagnostic monitoring and proper reeling and paying out of the cable at maximum hoist and lowering, and trolley speeds and accelerations with wind speed of 28 m/s. The method and detail of the headblock cable restraint shall be as specified and provided by the cable reel manufacturer.

5.30.2 A single power and control cable shall be provided for spreader operation. The cable shall be installed and run from the trolley to the spreader headblock.

5.30.3 Power and control functions shall be provided through a heavy-duty, multi-conductor flexible cable. There shall be sufficient number of conductors for all remote controlled spreader functions, spreader power and at least four (4) spare conductors as approved by County.

5.30.4 The upper end of the cable shall be connected to the cable reel drum on the trolley. The reel shall have a collector ring assembly for connecting the cable conductors to the circuits from the trolley. The cable reel shall be driven by an AC motor and inverter drive, and manufactured by Stemmann, or County approved equal. The reel shall have enough torque and cable capacity to function properly throughout the entire hoisting range. The cable reel, and communications wiring, and supervision of the installation shall be provided by the Spreader Reel Manufacturer.

5.30.5 The cable shall be Pirelli Cordaflex (SM) RS or Pirelli Cordaflex (SMK) with 10 kN support elements.

5.30.6 The headblock short cable shall have a Pyle National connector to mate with the receptacle mounted on the spreader main electrical junction box. This connection shall be such that all existing Port of Miami 65LT capacity spreaders shall be interchangeable with these new Cranes (13 and 14).

5.30.7 The trolley to head block cable shall provide for a minimum 10 feet of "dead" cable at the bottom of the lower extremity of the total lift capability.

5.30.8 The Head Block junction box shall be horizontally mounted with the hand rails of the Head Block.

5.30.9 No quick-change "canon" type cable plugs shall be used at the ends of the cable from trolley to head block. Instead, the cable ends shall be hard wired to terminal strips in junction boxes on the trolley and head block. The terminal strips will be numbered in accordance with NEC and shall match the cable conductor numbers. The cable from the head block junction box to the spreader shall be hard wired to the headblock junction box and utilize a Pyle national plug

for connection to the spreader. The spreader end of the cable shall be heat-shrunk for weatherproof.

5.31 LIMIT SWITCHES AND INTERLOCKS

5.31.1 All limit switches shall be by the same manufacturers used on existing POM Cranes 11-12 as approved by the County. All switches shall be heavy duty, dustproof, oil-resistant watertight, and suitable for the marine environment use. Fork lever switches shall not be used for general functions.

5.31.2 All limit switches shall be mounted in easily accessible positions to facilitate adjustments, maintenance, and replacement. Limit switches shall not be mounted in access systems where they are subject to damage or present a tripping hazard. Fitting for Cable and Conduits shall be at the bottom of limit switch enclosure which is installed on the boom while boom up to prevent water from entering the limit switch while boom is in up stow position.

5.31.3 Rotary limit switches shall be such that if one of the contacts in the unit is operated while traveling in a given direction, it will remain in that direction and will reset only when rotated in the opposite direction. Each switch shall be easily adjustable to operate at any point within the entire range of travel. Lever operated limit switches shall be rated for the speed of the tripping cam and, shall be heavy duty type

5.31.4 Limiting and interlocking functions may be achieved through an appropriate PLC unit with the exception of those functions to be operated with complete mechanical switch gear as required for safety, applicable codes, certifying organizations or otherwise specified in these specifications.

5.31.5 In addition to the functions specified or identified elsewhere in these Specifications, the Contractor shall furnish switches for any additional functions that due to peculiarities of the design are required for safe and efficient operation. Such switches shall be as specified herein.

5.31.6 Interlockings

(1) Adverse results of system faults and incorrect operation shall be avoided through a failsafe design based upon a variety of interlocking functions. The control system shall always be safe in the event of any one failure. Interlocks shall be provided for, but not necessarily limited to, the following:

(2) Interlocks to prevent boom hoisting until the trolley is over the dock in a position for boom hoisting.

(3) Interlocks to prevent trolley travel until the boom is entirely lowered or raised and secured.

(4) Interlocks to prevent main hoist, trolley travel, and gantry travel during hoisting and lowering of the boom.

(5) Interlocks to prevent spreader hoisting until all connection pins on quick-change headblock are correctly located.

5.31.7 "Smart" Slow Downs

(1) To maximize productivity and efficiency of crane operations "Smart" slowdowns shall be provided by the drive system.

(2) Main hoist up slow down.

(3) Main hoist over dock slow down.

(4) Main hoist over water down slow down.

(5) Main Trolley end of travel slowdowns at landside and waterside for both boom up and boom down operation.

(6) Main Hoist and Main Trolley slowdowns associated with Sill Beam protection.

(7) Boom Hoist

5.31.8 Initiation of slow down shall depend on function speed such that slow down commences no earlier than necessary to decelerate to slow speed as the motion reaches the end of travel limit switch.

5.31.9 Limit switches, interlocks or equivalent devices as appropriate shall be furnished and installed for all crane functions. The type of switch, interlock and device for each function shall be of a software or hardware actuation as noted in the following sub-sections;

5.31.10 Main Hoist Travel

(1) Rotary cam limit switches or incremental/absolute encoders as approved by the County shall be coupled to main hoist drum to provide slowdown and stop functions at the upper and lower limits of travel, slowdown over dock and other functions as approved by the County.

(2) The main hoist shall have a block operated limit switch hard wired to the drive controller for emergency stop of up over travel protection.

(3) Slowdown (Software): to slow main hoist speed to a predetermined value when approaching the upper limit of spreader hoist travel.

a) A rotary CAM switch with significant circuits shall be provided and coupled to one of the main hoist drums for slowdown, synchronization and over travel stops.

b) Over speed switch

(4) Stop (Software): to stop main hoist at the extremes of spreader hoist travel.

(5) Hoist up Overtravel - Stop (Hardware): to stop main hoist 500mm minimum below the extreme spreader hoist physical upper travel limit if the Up Stop switch fails. The switch shall be hardwired and cause an emergency stop. The distance provided shall assure sufficient room to decelerate safely from maximum empty spreader speed without or damaging equipment.

(6) Dock Slowdown (Software): to slow main hoist lowering speed to a predetermined value when the trolley is over the dock and the spreader descends to a level of 20 feet (adjustable) above the dock.

(7) Slowdown (Software): to slow main hoist lowering when five turns are left on the cable drum.

(8) Stop (Software): to stop main hoist lowering when three turns are left on the cable drum.

(9) Sill beam protection (Software): To stop main hoist lowering when ten foot above the sill beam.

5.31.11 Main Trolley Travel

(1) An incremental and absolute encoder/tachometers shall be directly coupled to the Main Trolley motors to provide slowdown and stop functions at the forward and reverse limits

of travel, interconnection with main hoist for slowdown over the dock and other functions as approved by the County.

(2) Waterside Main Trolley slow downs (Hardware) (two-one for normal operations and the other for stowed boom): to slow trolley speed when approaching the waterside end of travel position and, for boom up operation, with the boom in stowed position.

(3) Waterside Main Trolley stops (Software) (two-one for normal operations and the other for stowed boom): to stop trolley at the waterside end of travel position, maximum outreach and, for boom up operation, with the boom stowed position.

(4) Waterside Main Trolley over travel stop (Hardware-Lever Arm Limit Switch) (two – one for normal operations and the other for stowed boom): if the normal end of travel switches (slowdown and stop) fails to work and stop the trolley at the waterside end of travel with the boom down and, for boom up operation, with the boom in stowed position.

(5) Landside Main Trolley slow down (Hardware): to slow trolley speed when approaching the landside end (Back reach) of travel position.

(6) Landside Main Trolley stop (Software): to stop trolley at the landside end of travel position.

(7) Landside Main Trolley over travel stop (Hardware): if the normal end of travel switch (Landside Stop) fails to work and stop trolley at the land side end of travel.

(8) Boom Clear (Hardware-Proximity Limit Switch): to interlock with boom hoist control so that the boom cannot be raised unless the trolley is over the dock behind trolley forward slowdown check when boom is in up stow-position.

(9) Boom Clear (Hardware-Proximity Limit Switch): to interlock with boom hoist control so that the boom cannot be raised unless the Catenary Trolleys are properly stowed.

(10) Trolley Clear (Hardware –Limit Switch): to interlock with the boom hoist control so that the trolley cannot travel unless the boom is in the lowered position and supported by the forestays or in the fully raised and stowed position.

(11) Sill beam protection (Software Encoder): To stop trolley with the spreader in the lowered position from travelling into the sill beam (stop set at 10 feet of WS and LS of sill beams).

5.31.12 Boom Travel

(1) Rotary cam limit switches or incremental/absolute encoders as approved by the County shall be coupled to the boom hoist drum to provide slowdown and stop signals at the upper stowed positions and lower limits of travel during operation. Interlocking shall be provided so that other motions cannot operate unless the boom is in the operating or stowed position.

a) Boom Latch Switches
b) Up Travel Switches

(2) Boom Down Travel (Hardware, Lever Arm Limit Switch): To prevent lowering of boom without unlatching the boom.

(3) Down Slowdown (Hardware, Cam Limit Switch): to reduce the speed of the drive when the boom is near the down position so that shock loads to forestays, boom pins and reeving system is minimized.

a) Down Stop (Hardware, Cam limit switch): to stop boom lowering when the weight of the boom is supported by the forestays. The switch shall be interlocked with

hoist and trolley motions to prevent trolley travel onto the boom unless the boom is supported by the forestays

b) Up Stop (Hardware, Lever Arm Limit Switch): to stop the boom in the raised position after it has entered the boom locking devices. This switch shall reset before the boom is lowered from the locking devices so that the locking devices may be released.

c) Boom Up Travel (Hardware, Lever Arm Limit Switch): To prevent safe boom up motion and not damage the boom latches if they are in the lowered position.

d) Up Slowdown (Hardware, Cam Limit Switch): to reduce the speed of the drive and to recalibrate the boom hoist motor current limit so that the stall torque of the drive will not damage any part of the crane if the Upper Stop fails.

e) Boom Up Over Travel Stop (Hardware, Lever Arm Limit Switch):

5.31.13 Gantry Travel

(1) Gantry travel shall not be permitted until interlock contacts sense that all of the following are satisfied;

a) (Hardware, Lever Arm Limit) Stow Pin disengaged
b) All automatic storm brakes are released.
c) All gantry motor brakes are released.
d) No gantry motors indicate excessive temperature.
e) Boom is in full stowed, or in operating position (completely lowered).
f) Cable Reel is in operating condition and the slack is removed.
g) Power cable is not completely payed out

5.31.14 Sill Beam Protection

(1) Sill Beam protection utilizing slowdowns and stops as described herein and as necessary to prevent collision in both vertical and horizontal directions between the spreader (or container) and both Sill Beams (waterside and landside). The system shall provide necessary protection with minimum affect on productivity. The system shall be user-friendly and allow adjustment of the size of sill beam protection zones by maintenance personnel. A bypass shall be provided in the CMMS for maintenance personnel.

5.31.15 Over speed Switches:

(1) An over speed switch shall be provided on the main hoist and boom hoist drum to trip control power and set the main hoist motor brakes and boom hoist motor brake and the emergency drum disc brake at 115% of full load rated speed. Over speed switches shall require manual reset by maintenance personnel after an overspeed trip.

5.31.16 Overload Protection:

(1) An overload protection system shall be incorporated which will prevent hoisting if a preset load weight limit is exceeded. This will be incorporated in the Weight Indicator Device.

5.31.17 Miscellaneous:

(1) A key operated bypass shall be provided in the E-House to allow maintenance bypass if the system malfunctions snag load – not overload.

(2) All other functions that are necessary to the safe and efficient operation of the Crane.

5.32 ELECTRICAL PROTECTIVE AND CONTROL DEVICES

5.32.1 Control equipment shall incorporate under-voltage protection and thermal and instantaneous overload protection. Each power conversion unit shall have over-temperature protection and/or fan loss protection. Instantaneous over current relays and phase loss relay shall be provided for the Main Hoist, Boom Hoist, Main Trolley and Gantry motors. Instantaneous over-current protection for the main hoist and trolley may be provided by the static IOC (Instantaneous Over Current) feature in the conversion units.

5.32.2 It shall be necessary to have all master switches in the neutral position in order to reset control power.

5.32.3 Circuit breakers used in panel boards shall be commercial molded case type, quick- break, with inverse time tripping characteristics on over-loads and instantaneous trip device for short circuits.

5.32.4 Fuses shall be non-renewable NEC standard cartridge type except for special applications such as current limiting fuses.

5.32.5 Phase loss protection for AC motors.

5.33 OPERATOR'S CABIN

5.33.1 The crane operator shall have a series of indicator lights for visual confirmation of crane functions. At a minimum these indicator lights shall be installed at floor level in front of the operator's seat in two separate banks, for ease of viewing while working the crane. The light arrangement noted below is specifically for the floor mounted indicator lights. The mountings on the operator's set console may have a different arrangement as approved by County. All indicator light components and enclosures shall be of stainless steel fabrication. The following indicator lights shall be contained in the Operator's Cab:

Left side bank	Right side bank
Spreader landed	Crane Fault
Spreader twistlocks locked	Main hoist ropes slack
Spreader twistlocks unlocked	Hoist overload
20 ft. spreader	Wind Warning*
40 ft. spreader	Gantry storm brake set
45 ft. spreader	Gantry storm brake released
Twinlift housings down	Spare light

*The Wind Warning light shall illuminate at a wind speed of 25 mph.

5.33.2 No I/O boards and appurtenances installation are acceptable in the crane operator's seat. I/O's are only permitted in the seat consoles. In addition, the following devices shall be mounted in the Operator's seat console within the cab as currently in use at the Port of Miami. See reference Operator's seat console arrangement drawing included in Section 9 of these Specifications.

(1) Trolley and Gantry operation master switch
(2) Hoist and Trim master switch
(3) Control On Push Button (illuminated green)
(4) Cab light dimmer switch (rheostat)
(5) Slack Rope on/bypass key-operated switch
(6) Spreader twin lift housing separating control
(7) Storm Brake selector switch (set and auto
(8) Storm Brake Manual Override Key Switch
(9) Storm Brake Manual Override Selector Switch for Maintenance (Operator and Release)
(10) Spreader hydraulic pump on/off indicator lamp
(11) Operator Ship Flood Lights on/off Switch
(12) Crane Boom Flood Lights on/off Switch

(13) Spreader feeler pin bypass push button, interlocked with Ground Level Control Station by pass key switch
(14) Spreader Twinlift housings set down/up
(15) WS flipper up/down switch
(16) LS flipper up/down switch
(17) Spreader power cable jog up push button
(18) Spreader power cable jog down push button
(19) Container/cargo/ reeve mode switch (Activation of Switch at Dock Level Control Station)
(20) Fault reset push button (yellow)
(21) Lamp test push button
(22) Indicating lights for the following functions;
  a) Crane fault
  b) Main Trolley Recalibration (resync require)
  c) Hoist Recalibration (resync require)
  d) Operator Ship Flood Lights on (illuminated green)
(23) The Operator Cabin control console arrangement shall be as currently in use on Port of Miami Cranes, see Operator Console Layout included in Section 9 of these Specifications. An Operator Display Monitor shall be installed in the Operator Cabin and shall display Crane faults.

5.34 EMERGENCY STOP SWITCHES

5.34.1 In accordance with OSHA, requirements Emergency Stop (E-Stop), red mushroom head, turn release push-buttons shall be provided for at least the following locations within easy reach of personnel:

(1) Operator's Cab
(2) Boom Hoist Operators Cabin
(3) Both sides of the waterside sill beam, at each leg
(4) Both sides of the landside sill beam, at each leg
(5) Control Room
(6) Drives Room (a minimum of two, one at each end)
(7) Machinery House (a minimum of two)
(8) Dock Level Control Station
(9) Dock Level Monitoring Station
(10) Headblock
(11) Window Wash Platform
(12) Main Trolley

5.34.2 Identification signs of adequate size shall be provided for Emergency Stop push-button at all locations.

5.34.3 Signs for waterside and landside sill beams locations shall be installed 6' feet above the surface of the dock. Signs shall be painted with porcelain enamel with red background and 4" white letters. Crane lighting should clearly illuminate the push-buttons.

5.34.4 E-Stop switches shall interrupt main A/C control power. Control power shall be reset at indicated locations in the operator's cab, boom hoist house, boom hoist cabin, electrical house, trolley machinery house and Dock Level Control Station.

5.35 BOOM HOIST OPERATOR'S CABIN

5.35.1 The boom hoist operator's cabin shall have the following operations:

(1) Control On Push-button (illuminated green)
(2) Boom Stowage Pin Latched Light (red) "Boom Secured"
(3) Boom Up Push-button
(4) Boom Stop Push-button
(5) Boom Down Push-button
(6) Boom Up indicator light
(7) Boom Down indicator light

(8) Boom Stowage Pin Maintained Selector Switch (latched and unlatched)
(9) Boom Auto/Manual switch
(10) Slowdown function (for maintenance; greasing of cables) indicator light
(11) Emergency Stop Push-button (turn release)
(12) Boom Sync Indicator Light

5.35.2 The control console arrangement shall be as currently in used at the Port of Miami, see reference Control Console Arrangement drawing included in Section 9 of these Specifications.

5.36 DOCK LEVEL CONTROL STATION

5.36.1 A control station shall be provided on the waterside of the landside gantry assembly, at ground level to permit the crane maintenance technicians to operate hoist, spreader functions, and gantry motions. The control console arrangement shall be as currently in use at the Port of Miami, see the reference DLCS console arrangement drawing included in Section 9 of these Specifications.

5.36.2 The dock level control station shall have the following operations:

(1) Control On push button (illuminated green)
(2) Fault Reset Push Button (illuminated yellow)
(3) Hoist and gantry Joystick Switch
(4) Hoist/Gantry motion select switch (two way maintain type)Slack Rope on/bypass key-operated switch
(5) Storm Brake selector switch (Set and Auto)
(6) Spreader hydraulic pump on/off push button (illuminated green)
(7) Spreader feeler pin bypass keyed switch
(8) WS flipper up/down switch
(9) LS flipper up/down switch
(10) Spreader twin lift center housing separation control
(11) Spreader Twinlift housings set up/down
(12) Spreader power cable jog up push button
(13) Spreader power cable jog down push button
(14) Container/cargo/reeve mode switch
(15) Container/cargo/reeve mode activation switch for Operator's Cabin for Cargo
(16) Emergency Stop Push-button (turn release)
(17) Operator Ship Floodlights on/off switch
(18) Crane Boom Floodlights on/off switch
(19) Indicating Lights for the following functions;
  a) Crane fault
  b) Hoist Recalibration (resync required)

5.37 DOCK LEVEL MONITORING STATION

5.37.1 A walk-in type Dock Level Monitoring Station (DLMS) shall be provided and located on the opposite elevator corner of the landside sill beam level. The DLMS shall be totally enclosed, insulated, and air conditioned. The enclosure shall be provided with a lockable door, windows, chair, and a shelf for a CMMS Monitoring Station with monitor, keyboard and mouse. No overrides/by-pass shall be permitted from this station. The Master CMMS located in the E-House Control Room shall control the access parameters of this station. See referenced Dock Level Monitoring Station drawing included in Section 9 of these Specifications.

5.37.2 The Crane maintenance technicians shall be able to operate from this station, the Crane hoist, spreader functions, gantry motions and the CMMS. The control consoles shall be constructed of stainless steel as approved by Owner.

5.38 VENTILATION, HEATING, AND AIR CONDITIONING

5.38.1 All heating, ventilation, and air conditioning criteria shall comply with the standards as set by the American Society of Heating, Refrigeration, and Air Conditioning Engineers (ASHRAE).

5.38.2 The Operator's Cabin and Dock Level Monitoring Station shall be equipped with the required thru wall air-condition unit(s) with a minimum 10,000 Btu/hr heat pump, as approved by County. The Control and Drives Rooms shall each have its own separate air conditioning systems. Power for the air conditioning/heat pump shall come from the same circuit as used for each enclosures lighting and power.

5.38.3 The Control and Drives Rooms shall have independent thermostatically controlled, air conditioner (heat pump) system which shall maintain the environment within at 15°C and 50% relative humidity under all outside Tropical weather conditions to include temperatures of 110° F under conditions of maximum solar heat gain, 100% humidity and equipment heat output. Copper to copper condensers shall be provided.

5.38.4 The air conditioning system for the Drives Room shall be totally redundant consisting of a minimum of two (2) separate units sized such that each shall be capable of maintaining the required environment within the Drives Room. Each unit shall be able to operate independently of each other and within the parameters required by the drive system design. However, during normal Crane operations the units shall be cycled every six (6) hours and every twenty-four (24) hours during no Crane work periods.

5.38.5 Air conditioning and heating controls located inside each enclosure shall have the capability during heating requirement to maintain a minimum inside temperature of 70°F with an outside temperature of 30°F and 30 mph wind. .

5.38.6 Air conditioner and electrical controls shall be of U.S. manufacture or as approved by County.

5.38.7 The Operator's Cabin, Drives Room, Control Room and Dock Level Monitoring Station shall be fully insulated as required to meet the above provisions.

5.39 SLACK ROPE/SNAG AND OVERLOAD PROTECTION

5.39.1 The Crane(s) shall be equipped with a load measuring system utilizing four (4) high precision load cells, located on the Crane(s) so they are readily accessable for maintenance and where they will not be damaged by lightning strikes. The location of the load cells shall be approved by the County. System functions shall include: slack rope, hang load, differential load of hoist cables, overload and snag load shutdown.

5.39.2 The slack rope function shall prevent the main hoist ropes from paying out when the ropes start to slack. The function shall be electrically interlocked with the load cells. After the set automatic slow-down function is activated, the slack rope function shall stop the lowering action. The stop action shall be initiated by the load cell sense of no load weight. The load weight parameters shall be adjustable. The stop function shall have an adjustable time parameter of 0.10 seconds to 2.0 seconds. A keyed bypass switch shall be provided on the operator's seat console.

5.39.3 In the hoisting direction, the system shall limit the hoist speed to approximately 15% of the rated speed until the load of the head block has been supported by the ropes.

(1) Tare weight load function of the system will accurately display the working load suspended on the Crane in the Electric House CMMS and Operator's Cabin. It will be possible to zero the weight at the spreader twist locks or the cargo beam hook so that the actual weight of the cargo being hoisted can be determined and displayed. The weight of the spreader or cargo beam attached to the head block shall not cause an inaccurate display.

5.39.4 Differential load of hoist cables will be the comparison of one of any load cell signal to another load cell signal. This function will prevent hoisting should the difference between any two become excessive (this is attempting to hoist a container or load that is latched to the lip on one side, etc.). Additionally, the differential load of the hoist will be the comparison of the sum of the left side load cells signal to the sum of the right side load cells signal.

5.39.5 The system shall have separate overload protection settings, for the rated load of spreader (65 LT) under a twin lift mode, 50LT under the single spreader mode, and 100 LT cargo beam mode.

5.39.6 Overload protection will prevent hoisting up, but still permit to lower the load if the load is greater than the safe working load of the Crane at the initial load pick-up or during hoisting. This function will not prevent hoisting due to loads experienced during trolley and hoisting acceleration. The overload will be automatically recalibrated when the appropriate mode is selected.

(1) Snag load protection will be provided in the system. Any load cell or the sum of all may detect a snag load. Should a snag condition occur, the system will display and print the date, time and peak load on the crane.

5.39.7 All load sensor functions and adjustments will be software tunable. No potentiometers shall be used. The slack rope/overload system shall not inhibit the normal operation of the Crane.

5.39.8 Redundant to the slack rope system, limit switches will be installed at the four corners of the spreader frame at the end of the locking pins location. The switches will sense the following;

(1) All four (4) head block pins are set engaged into spreader.
(2) Enable the main hoist operation
(3) Limit hoist speed until no slack rope is detected.

5.40 GANTRY WARNING DEVICES

5.40.1 Four (4) electrically-operated audible gantry travel warning devices shall be provided. The devices shall be mounted on the top area of each main equalizer outboard of the legs. The devices shall be activated when the gantry master switch is moved off center in either direction, and shall cease to sound when the gantry master switch is returned to the center-off position. The sound level shall be adjustable from the minimum to the maximum permitted by OSHA.

5.40.2 In addition, four (4) red dome weatherproof strobe lights shall be mounted on the top area of the gantry main equalizer beams at eye level and shall operate when the gantry directional commands are energized. The strobe lights shall be as manufactured by Star-fire and in compliance with OSHA Requirements.

5.41 DRIVES ROOM

5.41.1 A Drives Room shall be provided inside the Machinery House to house all electric drive control panels and associated equipment. The room shall be ventilated as herein required. It shall have two (2) access doors at each end; one leading into the Controls Room and the other into the Machinery Room.

5.41.2 All drive control panels in the Drives Room shall contain analog or digital meters mounted on the partial front panels of the electrical control cabinets (panels) to indicate the following:

(1) Incoming line voltage meter shall be non-linear, circular scale meter displaying expanded scales in the nominal voltage range.
(2) Motor voltage, current or torque, and speed:
   a) Main Hoist
   b) Boom Hoist
   c) Main Trolley
   d) Gantry
   e) DC bus voltage

5.41.3 The auxiliary control panels shall also contain the following indicating devices:

(1) "Emergency Stop" push-button turn release with maintained latch red mushroom head. Red illuminated push-button for "Crane Main Power On"

(2) Elapsed time meters up to 99,999.99 hours shall be provided for the following parameters:

a) Crane Main Power On
b) Main Hoist Operating Time
c) Main Trolley Operating Time
d) Gantry Operating Time
e) Boom Operating Time

(3) Push-buttons and red indicating light shall be used for "Floodlights On-Off".

(4) Select switch for photocell for walkway, platforms, main boom and girder lights shall be provided.

(5) A line AC voltmeter shall be provided with a non-linear, circular scale meter displaying expanded scales in the nominal voltage range.

(6) Meters must be able to be easily read during emergency lighting conditions

5.41.4 Additional shall be provided as required.

5.42 PANEL BOARDS

5.42.1 Space requirements for all panel boards shall comply with requirements of the NEC.

5.42.2 Panel boards shall be of the circuit-breaker type and shall be installed only in dry waterproof locations. Circuit breakers shall have combined thermal and magnetic trip units. Panel boards, rated 120/240- volts, shall be the NAB type and panels rated 480 volt shall be of the NHB type as manufactured by General Electric, ABB, or Siemens as approved by County. Panels for individual mounting shall be surface type mounted in steel cabinets having doors with Plexiglas front covers where needed for safety due to high voltage when doors are opened. Panels shall be built and labeled in accordance with Underwriters' Laboratories (UL) requirements. Panel boards shall have a minimum of four (4) spare circuit breaker pole spaces; two (2) spare spaces in the operator's cab. Ground Fault Indicators (GFI) breakers shall be provided for dock level and operator's cabin convenience outlets.

5.42.3 Lighting panel boards shall be provided in the Main AC Power Control Center (MCC). Essential services shall be supplied from a 480-volt normal source through a 3-phase transformer rated 120/240 volts. The essential services connected to the panel board (s) shall include but not be limited to the following:

(1) All facilities in the operator's cabin
(2) All convenience outlets and the 120-volt house and walkways,
(3) All exterior convenience outlets mounted on the crane,
(4) Aviation obstruction lights,
(5) Control panel heaters and lights,
(6) Motor heaters, and,
(7) Intercom system.

5.42.4 A 480-volt source, electric panel used to power the spreader hydraulic pump drive motors shall be installed in theDrive Room and on the Main Trolley In addition, a panel will be provided that will include circuit protection for the following:

(1) Main Panel breaker,
(2) Two (2) spare 20-amp 1-pole breakers,
(3) Breakers for cab air conditioner,
(4) Breaker for lights,
(5) Breaker for 120 volt outlets,

(6) Breaker for communication equipment, and,
(7) Breaker for 120 volt spreader control power

5.42.5 All panel boards, junction boxes, pull boxes or cable and wire gutters, etc., exposed to the weather shall be properly sealed from water and weather intrusion under hurricane wind pressure conditions. Access cover seals or gaskets shall comply with these parameters.

5.43 FESTOON SYSTEM

5.43.1 The Festoon System shall be by Wampfler or County approved equal. Festoon hardware, all wiring and supervision of installation shall be supplied by the Festoon System Manufacturer. The festoon system shall be I-Beam type and shall be engineered and installed for ease of replacement of the I-Beam. The system will be designed for container crane application.

5.43.2 All power and control cables shall be run in flexible, insulated, cable conductors from junction boxes on the landside cables and of the main girder crane frame via a festoon system to junction boxes on the trolley. The festoon system shall consist of heavy-duty, high performance trolleys allowing the conductor length to collapse and expand.

5.43.3 The festoon cables shall be Pirelli Cordaflex (K), BIW or County approved equal. The cable supplied shall have at least three (3) spare conductors 8 AWG or larger and ten (10) spare conductors 12 AWG or larger.

5.43.4 Fiber optic cable shall be Pirelli Optoflex (K), BIW or approved equal. Festoon trolley wheels shall be changeable in place. The cable saddles shall be arranged for easy side loading of a replacement cable. Steel parts shall be hot-dip galvanized after fabrication. Bolts, wheel axles and fittings shall be stainless steel.

5.43.5 The main support rollers shall be at least 100 mm in diameter. Flanged wheels shall not be used. Side guides rollers and uplift roller shall be used. Wheels for festoon trolleys shall be coated with a durable synthetic material to minimize noise, lasting under South Florida environmental conditions, permanently lubricated and sealed bearings. Side and anti-lift rollers shall be fabricated of steel.

5.43.6 All cables shall be blocked in place so as not to overlap or slip on the saddle. Relief drum with Kellems grips shall be used to relieve strains on the cables before they enter the junction boxes. Stainless steel tow cables shall be installed between all festoon trolleys. The number of festoon trolleys, loop length, tow cable organizers tow cables, shock cords, tow cables and bumpers shall be as recommended by the festoon manufacturer for smooth operation.

5.43.7 Adequate bumpers shall be provided between each trolley truck. Elastic shock cords will be installed as required to insure smooth acceleration of front and rear trolleys.

5.43.8 Fiber-Optical Cable and low power level shielded or twisted pairs shall run in separate UL listed cables and shall terminate at both ends of the festoon system in separate junction boxes from the power and control circuits. The Contractor shall provide a minimum of one (1) six (6) cone fiber cable future communications signals such as video.

5.43.9 A service platform shall be provided on the Crane's backreach to permit inspection, repair and/or replacement of the festoon system to include the festoon trolley's rollers and hangers.

5.44 COMPLEMENTARY REQUIREMENTS

5.44.1 Anemometer

(1) The Anemometer wind sensor with alarm provided shall continuously indicate wind velocities. The wind alarm shall be Lambrent or County approved equal.

(2) The wind alarm system shall include a transmitter, receiver and all other necessary electrical components to complete the system. Wind speed indicators are to be provided in the operator's cab and at all monitoring stations through the CMMS. The crane

diagnostics shall receive a signal from the anemometer and record wind speeds up-to a minimum of 150 mph.

(3) Loss of AC power to the system shall not cause loss of settings.

5.44.2 **Electrical/Convenience Outlets**

(1) 120 volt, 20A single phase, outdoors-weatherproof dual convenience outlets shall be provided as follows:

a) One (1) at cable reel platform
b) Two (2) in the operator's cab
c) Five (5) on the boom and girder (one at backreach, one at the hinge point, two at intermediate positions between hinge and boom tip, and one at boom tip)
d) Two (2) on the Machinery House (one next to the workbench)
e) Four (4) in the electrical house (Two (2) in the Control Room and Two (2) in Drive Room)
f) Four (4) at dock level (one adjacent to each crane leg)
g) One (1) each at the festoon platforms
h) Two (2) on Main Trolley
i) One (1) at waterside apex

(2) Receptacles shall be the grounded type suitable (GFI) for operation of conventional hand power tools.

5.44.3 **External Maintenance Power Supply**

(1) The Crane(s) shall be furnished with electrical equipment and circuitry equipment to provide external electrical power to the crane, including the Main Hoist, Boom Hoist and Main Trolleys auxiliary drives, in the event the main power is lost.

(2) The dock electrical power service is 480 volt, 3 phase, 4 wire with a receptacle rated at 60 amperes, with a grounding pole.

(3) A female connector plug as manufactured by Crouse Hind Model JG639H or approved equal shall be provided. The connector plug shall be mounted on the waterside of the waterside gantry trucks.

(4) An automatic transfer switch shall be provided in MCC located in E-house by drive manufacturer. The transfer switch is for the purpose of automatically connecting the Crane AC power services to the external power supply when Crane's main power is shutdown.

5.44.4 **Welding Outlets**

(1) Eight (8) welding outlets for welding leads shall be provided on the crane(s) in the proximity of the following locations;

a) Landside gantry truck level and waterside gantry truck level
b) Boom outreach
c) Boom hinge
d) Backreach
e) Machinery House
f) Main Trolley
g) Waterside apex

(2) The welding outlet shall be 480 VAC, 3 phase, 4 wire, 60 amp "CROUSE-HINDS ARKTITE" or approved equal. The outlet will be compatible with the power cord provided on the welding machine to be furnished on the crane.

(3) Two (2) copper wire size AWG 00 welding leads will be run in the appropriate size conduit from the welding outlets to the welding machine in the Machinery House. The welding leads will terminate in NEMA 4X hinged cover J-boxes on both ends with insulator stand offs. It is intended that the welder person will attach his ground clamp and rod holder leads to the connection in the J-boxes.

5.44.5 **Enclosures**

(1) Weatherproof and/or watertight enclosures fabricated of stainless steel and utilizing stainless steel hardware shall be provided and used in all exterior locationsexposed to the South Florida environment. High grade stainless steel as approved by County must be used.

(2) Junction, terminal and outlet boxes, and similar fittings shall be NEMA4X, high grade stainless steel as approved by County. Cover screws shall not extend into boxes of any watertight enclosures. Enclosure size will be ample to allow easy checking or changing of wire and cable terminations without interference. Ten percent (10%) spare terminal block shall be provided.

(3) Enclosures shall be designed and supported to withstand the vibrations and stowed wind forces encountered on the crane. All enclosures having remote I/O devices shall have shock mounted sub-plates.

(4) Panels shall be easily accessible at chest height. Covers of electrical enclosures shall be hinged, capable of being opened to fully expose and easy remove all internal components. Stainless steel hinges and latches shall be provided to secure covers. Covers shall have latches to hold them open.

5.44.6 **Nameplates**

(1) All name plates shall be engraved in English as approved by County. Name Plates shall be provided for Electrical, Hydraulic and Mechanical Equipment.

(2) Nameplates shall be provided for devices on switchboards to identify function, and indication, circuit, or purpose. Nameplates for voltage coils or shunt, under-voltage or reverse current shall show voltage rating and value of external resistance, if used.

(3) Name plates provided for special precautions, maintenance or operating instructions shall be on a separate plate attached to the equipment.

5.44.7 **Circuit Identification**

(1) All internal and external conductors to panels and inside shall be identified with wire numbers at both ends in accordance with the wiring diagram. Wire markers shall be hot stamped sleeves with machine printed, permanently-legible numbering. Conductors leaving all panels and junction boxes, AC motor control center, cab control panel and operator's console shall be marked with the conduit number or cable in addition to the wire number. Terminal blocks shall have the same markings as the wires connected to them.

(2) The spare conductors of each cable shall be marked with the cable number and conductor number as in the interconnection table.

(3) Color coding in accordance with NEC of power supply conductors shall be consistent. Where insulation colors are not compatible, colored synthetic tubing or sleeves, no less than six (6) inches long, shall be used at conductor ends with identification of circuit letter and number.

(4) Designation on markers and nameplates shall be the same with designation on shop drawings.

5.44.8 **Operating Lights**

(1) A lighting system shall be provided for all ladders, stairs, walkways, platforms, machinery houses, cabins, electric rooms, and houses which shall, operate on 120 volts, AC power. Floodlights aimed to illuminate large areas of ladders and/or walkways are not acceptable.

(2) Minimum levels of illumination shall be Thirty (30) foot candles inside of Machinery, Drives and Control Rooms.

(3) All ladders, stairs, access platforms, walkways, control panels, maintenance platforms, and other areas that may require access during Crane operation shall be adequately illuminated. Minimum illumination in these areas shall be five (5) foot candles.

(4) Maintenance platforms including, but not limited to, backreach, trolley rope tensioner, cable reel service platforms (spreader and gantry), festoon service, boom tip, window wash platform, and A-frame peak shall have additional illumination sufficient for night-time service/maintenance to provide minimum illumination levels not less than fifteen (15) foot candles.

(5) The lighting fixtures for access systems and maintenance platforms shall be by Phoenix with stainless steel housing as approved by the County.

(6) The walkways, stairs and between ground level, hoist machinery house and operator's cabin shall have three (3) 3-way switches, one (1) located on the interior of the house at the entrance nearest the stair tower, one at the fixed end by leg on the operator cabin walkway, and another located on the gantry frame at ground level near the crane stairway entrance.

(7) Lighting for the Boom walkway and stairs shall have three (3) way switches one located inside the boom machinery house at the entrance nearest the stair tower, one at the end of Boom and the other at the hinge gate.

(8) The backreach, platforms, stairs, walkway and ladders shall have three (3) switches located inside the boom machinery house at the entrance nearest the stair tower, one at the end of boom and the other at the hinge gate.

(9) The Operator's Cabin shall be equipped with fluorescent lights to maintain thirty (30) foot candles illumination on all operating surfaces. Local switching shall be provided inside the cab within the operator's reach.

(10) All flood light fixtures shall be high pressure sodium as manufactured by Phoenix and used on the Port's existing Cranes. Remote mounted ballast shall be provided. Fixtures shall include tilt-up supporting arms and a sealed optical system designed for 1000 watt lamps. Access platforms shall be provided for easy maintenance of each and all lighting fixtures as required.

(11) Sufficient light fixtures shall be furnished and installed to provide a maintained minimum illumination of thirty (30) foot candles 40 feet either side of Cranes, Boom and main girder centerline on the dock directly under the crane, and five (5) foot candles on the adjacent dock within 75 feet of the crane main girder centerline

(12) Trolley Ship lighting: Four (4) additional 1000 watt floodlights shall be installed on the Trolley to light the area directly below and into the ships working cell. These fixtures shall not be part of the measured illumination specified above for boom and dock areas. These floodlights will be controlled from the cabin.

(13) The floodlights switches shall be located at the Dock Level Control Station, in the main auxiliary control panel in the E-House, and in Operator's Cabin seat console.

(14) Portal Beam Lighting: Four (4) additional floodlights fixtures shall be mounted on the portal beams; two (2) fixtures on each beam facing the working Dock area under the crane 25 Feet from each crane leg. These fixtures will have an independent switch located in the Dock Level Control Station. These fixtures are not part of the measured illumination requirements as specified above. For the Boom and Dock Areas a circuit breaker shall be provided in the E-house MCC.

(15) Air Navigation Obstruction Lighting: the Crane (s) shall be equipped with continuously energized lights with red lenses, of the wattage, type and configuration as required by the Federal Aviation Administration. These lighting fixtures shall be located in accordance with and comply with the requirements of FAA Advisory Circular AC 70/7460-1C. Battery backup required. The fixture mounting brackets on the obstruction lights shall be hinged so that the lights can be folded easy maintenance.

(16) The navigational lights shall be installed in three (3) locations; at the highest point of frame (the boom latch platform), boom tip and backreach.

5.44.9 **Space Heaters**

(1) Space heaters shall be provided for control panels, festoon junction boxes, enclosed brakes, housings, and motors larger than 5hp; all with provision to energize those heaters when the crane is not in service, thereby reducing the possibility of moisture condensation within those units. Heaters shall be powered by separate, continuously-energized lighting circuit independent of the crane control power. A red warning plate shall be provided at each heater location warning the user of this separate power source. Heaters shall automatically cut off during crane operation.

5.44.10 **Ventilation**

(1) Power and control shall be provided for ventilation fans in the Machinery Room. Control shall consist of a "manual-off-automatic" switch, and adjustable thermostat, circuit breaker and starter. The thermostat shall control in both "manual" and "automatic". The crane diagnostics shall indicate fan loss faults but shall not be interlocked with the crane fault.

(2) A stainless steel backdraft damper shall be provided on all ventilation fans. The fans shall be located that allows easy access for maintenance.

5.44.11 **Intercom System**

(1) An Intercom System as manufactured by Whelen shall be provided with each Crane. Loudspeakers for the Intercom shall be provided for the operator to have the capability to speak to personnel on the ship or at the wharf level. Two (2) loudspeakers shall be mounted on the aft section of the Operator's Cabin; locations of all speakers shall be as approved by the County. These speakers must be distinctly audible within maximum of 50 meters (50m) from its audible location in the Operator's Cabin. A volume control switch shall be installed in the Operator's Console to adjust the volume of each speaker as required by working conditions. Additionally, the system shall include one (1) synthesizer and a balance assembly.

(2) The intercom equipment shall include, but not be limited to, the following:

a) Operator's Cabin Station:
b) Enclosure
c) Amplifier; integrated or remote
d) Non-Corrosive Speakers for marine environment
e) Speaker Amplifier
f) Selector switching with volume control

(3) The location of the Intercom components within the Operator's Cabin shall be pre-approved by the County. Prior to the system initial usage at the Port, the Contractor shall calibrate the system to comply with the standards of OSHA and all other applicable codes. All efforts shall be employed by the Contractor to minimize the loudspeaker noise outside of the designated work area.

5.44.12 **Lightning Protection**

(1) All Crane frame bolted and pinned joints shall have heavy braided copper conductors around the joint.

(2) Grounding sliding shoes shall be provided on the Crane rails at the four Corners of the Crane.

(3) A lightning protection system is to be provided by the Contractor in accordance with the current issue of NFPA "Lightning Protection Code". As a minimum, this system shall incorporate air terminals on the boom tip and the top APEX, utilize appropriate down conductors and be equivalent to Erico System 2000 or County approved equal.

(4) High Voltage line: Install lightning arrester in High Voltage panel.

(5) Control source line: Install surge absorber at secondary or transformer.

(6) PLC power source line: Install surge absorber at primary of transformer.

(7) Remote I/O power source line: Install surge absorber at exit of the Trolley House, Operator's Cabin, Headblock, signal transmission line between Trolley House and Operator's Cabin.

(8) Fiber Optic Lightning protection shall be supplied by an approved manufacturer. The surge protection provided shall be as recommended by the surge protection supplier or approved equal.

5.44.13 **Electrical Start-Up Requirements (Commissioning)**

(1) The drive and control systems' manufacturer's field engineer (s) shall be present for the start-up, commissioning, testing and acceptance of the Crane(s) at the Port of Miami and thereafter on-site until all problems are resolved.

(2) Six (6) Channel Chart recordings shall be made available during start-up for analysis of drive performance. As a minimum, these chart recordings shall include for main hoist, trolley, boom and gantry:

a) Master Switch Speed Command – speed referenced
b) Tachometer Output – speed feedback
c) Motor Voltage
d) Four (4) Load Cell Outputs

SECTION 6

ADDITIONAL REQUIREMENTS

This page has been left intentionally blank.

SECTION 6 - ADDITIONAL TECHNICAL REQUIREMENTS

6.1 TRAINING OF COUNTY PERSONNEL AT MANUFACTURER'S SITE

6.1.1 The drive and control systems' manufacturer shall provide comprehensive classroom and hands-on courses of study for five (5) Crane Maintenance Technicians, covering the trouble shooting, repair, and maintenance of the motor controller, PLC and remote I/O system. The courses will be held at the Crane manufacturer's plant where Port of Miami representatives will have "hands-on" access to the Cranes and the type of hardware provided on the crane(s). The course will be scheduled at least 30 days prior to shipment of the first crane shipping to the Port. All costs of instructions and training aids shall be included in the contract amount. All travel expenses for the Technicians shall be the responsibility of the Port.

6.1.2 Upon the arrival of the Technicians at the plant, the Contractor and drive manufacturer shall schedule an eight (8) hour presentation to include all Port representative and engineers present the schedule of assembly, commissioning and testing

6.2 TRAINING OF COUNTY PERSONNEL AT PORT OF MIAMI

6.2.1 The Contractor shall furnish qualified structural, mechanical, spreader, communications, and electrical Trainers to train Crane Maintenance Technicians and Mechanics at the Port of Miami in the operation and maintenance of the Cranes. The Contractor shall provide qualified professional personnel for the following minimum periods of accrued training time:

Structural8 hours	(1 work day)
Mechanical	40 hours (5 work days)
Spreader 16 hours	(2 work days)
Electrical 64 hours	(8 work days)
Control Diagnostics	72 hours (9 work days)
Remote Monitoring	12 hours (1 work day) (County's and PMCM Staff)

6.2.2 The times listed above may be extended as determined by the training seminar program submitted by the Contractor.

6.2.3 The training shall be conducted at the Port, in classroom facilities, or as required in the field at the crane assembly facility or the crane maintenance installation at the Port. The training seminar shall be held prior to the crane (s) Substantial Completion issuance by the County.

6.2.4 The training seminar shall cover the following:

(1) Operating instructions covering all crane functions and modes.

(2) Operations, maintenance and servicing of all mechanical and electrical components of the crane, special servicing of all electrical components special training shall be provided for the electrical controls, crane drive systems, fault diagnostics system, report generation, weighing and communications system.

6.2.5 Port of Miami shall be able to reject the use of proposed trainers based on their English speaking abilities.

6.3 SUBMITTALS FOR COUNTY REVIEW

6.3.1 The Contractor shall provide all submittals, documents, drawings and printed manuals, in the English language with no exceptions as required by Project Schedule. Preliminary drawings, shop/fabrication drawings, as-built drawings and manuals shall be provided as required by these Specifications.

6.3.2 The Contractor shall submit "ALL" design drawings, calculations, technical data, purchased component information, shop drawings, etc, pertaining to the Cranes for review.

6.3.3 All communication, drawings, calculations and catalog information shall be in English with no exceptions.

6.3.4 All drawings shall be drawn and made to scale in the proper engineering format. The information shall be clearly presented so the County may review the details for conformance with the contract documents technical requirements. The submittal format and submittal list shall be approved by the County prior to any work commencing.

6.3.5 The following is the Submittals List that includes drawings and technical data establishes the "minimum" requirements for submittal of information to allow County to perform a thorough technical review of the Work and Cranes which will be supplied.

	Submittal Date
1. Project Control	
1. ***Project Schedule***	
2. ***QA/ QC Program***	
2. Calculations	
1. ***Stability Analysis***	
1. Factor of safety criteria	
2. All component dead weight calculations	
3. Wind loading calculations (wind pressure, surface area, drag coefficients, etc.)	
4. Trolley wheel loads	
5. Gantry corner and wheel loads for all load cases	
6. Lifted load distribution calculations	
7. Operating stability condition calculations	
8. Stowed stability condition calculations	
9. Gantry tie down and stowage pin calculations	
10. As-Built dead load calculations	
11. As-Built operating and stowed stability calculations	
2. ***Fatigue Calculations***	
1. Duty cycle calculations	
2. Description of design and design code criteria	
3. Stress calculations of all members, connections etc.	
3. ***Design Criteria***	
1. Structural: (All structural calculations used to design the crane including governing specs, loads, load combinations with fatigue analysis, gantry frame buckling, plate buckling, and computer output	
2. Mechanical/Electrical: Design life and load criteria calculations shall be for normal and overload conditions. Mat'l specs for all critical members (Structures, stays, etc.)	
3. Electrical	
4. Design Code(s)	
4. ***Structural Calculations***	
1. Gantry Components (including articulation mechanisms, trucks, equalizer beams, pins, and bushings, etc.)	

2. Frame
3. Main and Catenary Trolleys
4. Boom
5. Machinery House/Support Structure
6. Electrical Room/Support Structure
7. Headblock/Cargo Beam
8. Walks, Platforms, Elevator support, etc.
9. Spreader Components
10. Stays, especially stay end connection details
11. Operator Cab and Support
12. Trolley Rail Bed and Support Web
13. Boom Hinge
14. Main and Secondary Equalizer Pins
15. Tie downs/Stowage pins
16. Natural Frequency

5. ***Mechanical Calculations***
   1. Gantry Drive (Wheels, axles, bearings, couplings, reducers, buffers, brakes, articulation bearings, etc.), including material specs
   2. Main Hoist Components (Gear reducer, brakes, couplings, bearings, ropes, sheaves, shafts, drum, pillow blocks, emergency brake, etc.) including material specs
   3. Trolley Drive Components (Gear reducer, brakes, couplings, bearings, ropes, sheaves, shafts, wheels, axles, etc.) including material specs
   4. Catenary Trolley Drive Components (Gear reducer, brakes, couplings, bearings, ropes, sheaves, shafts, wheels, axles, etc.) including material specifications
   5. Boom Hoist Components(Gear reducer, brake, couplings, bearings, ropes, sheaves, shafts, drum, pillow block, emergency brake, etc.
   6. Trim System Components
   7. Snag Protection System Components
   8. All hydraulic systems and schematics
   9. Machinery House overhead service crane and components.
   10. Wire Rope(s)
   11. Main Hoist Wire Rope Equalizer Assembly

6. ***Electrical Calculations***
   1. Electrical Control System Description/Component Details
   2. All electrical schematics and wiring diagrams
   3. Wiring/Conduit Sizing, with Voltage Drop and Short Circuit Calculations
   4. Gantry, Main Trolley, Catenary Trolley, Boom & Main Hoist Motors/Controls (Festoon Motorized Trolley
   5. Motor/Drive Duty Cycle Load Curve/Sizing Calculations (Main Hoist, Main Trolley, Catenary Trolley, Boom, Gantry, T/L/S, Main (Shore) Power Cable Reel, Spreader Cable Reel)
   6. Power Consumption Calculations
   7. Safety devices and limit switch(s), proximity(s), etc. operational and interlock description

8. Operator's Console Control/Interface description
9. Overload Protection System
10. Load Indicating System
11. Floodlights/Access Lighting/ Emergency Light Including Illumination Levels
12. Switchgear, Transformer, etc.
13. Heating and Air Conditioning (Operator's Cabin, E-house and Dock Level Monitoring Station)
14. Gantry Cable Reel Trailing Cable

3. General Arrangement Drawings

1. Complete Shore Crane and Dock Interface
2. Operator's Cabin and Consoles
3. Main Hoist Arrangement
4. Boom Hoist Arrangement
5. Trolley/Trolley Drive Arrangement
6. Gantry Drive/Arrangement
7. Headblock and Cargo Beam
8. Drives and Control Room
9. Catenary Trolley
10. Machinery House (Machinery Room, E-House)
11. Telescopic Spreader
12. Festoon System
13. Walks, Ladders, Platforms, Elevator
14. Trim System
15. Boom Hoist Operator's Cabin
16. Flood and access lighting
17. Painting Drawing including paint procedure
18. Hinge Point
19. Equalizers
20. Tie Down System and Stowage Pins
21. Snag Protection
22. Machinery House Overhead Service Crane

4. Detailed Structural Drawings

1. Gantry Trucks Equalizer Beams
2. Complete Frame and Boom
3. Main Trolley Frame
4. Machinery House and Support Structure
5. Catenary Trolley Frame
6. Electrical House Enclosure/Support Structure (Control and Drives Room)
7. Headblock and Cargo Beam
8. Boom Latch System

9. Spreader
10. Trolley Rail, Stops, etc.
11. Cab Support Structure
12. Gantry/Shore Power Cable Reel Access and Support System
13. Walks, Platforms, Elevator System, etc.

5. Detailed Mechanical Drawings

1. Gantry Drive/Wheel Assembly
2. Gantry Pins
3. Boom Hoist Drive Components
4. Main and Catenary Trolley Drive Components
5. Main and Catenary Trolley Wheels/Axles/Bearings
6. Main Hoist Drive Components
7. Main Hoist Sheaves/Bearings
8. Headblock Components
9. Boom Hinge Assembly and Lower/Heel Pin
10. All Wire Rope Reeving
11. Machinery House Maintenance Hoist
12. Gantry Wheel Brakes
13. Boom Latch System
14. Tie-down/Stowage Pins
15. Telescopic Spreader Components/Hydraulic Schematic
16. Cargo Beam
17. Snag Load Protection System Components
18. All Sheaves/Bearings
19. Trim System
20. Structural member access arrangement and details
21. Interior Access Details
22. Hinge Point
23. Gantry and Spreader Cable reels
24. Festoon System

6. Detailed Electrical Drawings

1. Electrical House Layout/Equipment
2. Electrical Schematic/Interlocks
3. Operators Console Arrangement/Details
4. Main & CatenaryTrolley Drive Components
5. Gantry/Drive Components
6. Main Hoist Components
7. Boom Hoist Components
8. Electrical Control System
9. Machinery House Equipment
10. Wiring/Conduit

11. Limit Switch Arrangement(s)
12. Wind Anemometer System
13. Spreader Components/Schematics
14. Walkway/Flood Lighting System
15. Trolley Festoon System
16. Overload Protection system
17. Load Indicating system
18. Lightning Protection System
19. Trim System
20. PLC Logic
21. CMMS Logic
22. Communication System
23. Gantry/Shore Power and Spreader Cable Reels
24. Snag Protection System

7. Erection/Testing/Shipping Drawings and Information

1. Erection Procedures and Drawings (at Fabrication and Delivery Sites)
2. Performance Testing Procedures (at Fabrication and Delivery Sites)
3. Commissioning Testing Procedures (at Fabrication and Delivery Sites)
4. Shipping Procedures and Drawings
5. Sea state loading calculations and frame analysis
6. Sea fastening calculations
7. Off-Loading Procedures, Calculations and Drawings
8. Moving Fully erect crane across County's dock

8. Operation and Maintenance Manuals

1. Operation Instructions
2. Recommended Spare Parts List
3. Maintenance Manual
4. On-Site Training Procedure/Class Outline (Contractor and Control System Supplier)

9. As-Built(s)

1. All component weights, dimensions, materials, etc.
2. All As-built drawings and calculations of items submitted in the design review.
3. Final "As Commissioned"
   a. PLC Logic
   b. CMMS Software including all licenses
   c. Drive Firmware for all programmable drivers
4. Electrical Cable inter-connection Table

6.3.6 All information submitted for review, (including drawings and other submittals via email), shall have a cover letter listing all items submitted for review including submittal and drawing number and revision. The drawings shall be in the English language only and include a description and notation of items revised from revision to revision.

6.3.7 Drawings and calculations shall be submitted in a logical order and grouped by assemblies so that the review process can be expedited and all submittal data checked against previous information submitted.

6.3.8 Submittals for design review shall include two (2) hard copies and an electronic copy in PDF format, as approved by the County.

6.3.9 After the County's approval and concurrence of the Crane's design, systems equipment, components and accessories for fabrication, the Contractor shall furnish one (1) complete set of said approved drawings in full size format drawings 24" x 36" and one (1) set in 11" x 17" format and one (1) electronic copy in pdf format.

6.3.10 After the County's approval and concurrence of the Crane(s) design, systems equipment, components and accessories for fabrication, the Contractor shall furnish one (1) complete set of said approved, in full size format drawings 24" X 36", one (1) set in 11"x17" format and an electronic copy in 'pdf' format.

6.4 AS-BUILT DRAWINGS AND MANUALS

6.4.1 General

(1) The Contractor shall provide all submittals, documents, drawings and printed manuals, in the English language. Preliminary drawings, shop/fabrication drawings, as-built drawings and manuals shall be provided as required by these specifications.

(2) After approval of the systems equipment, components and accessories, the Contractor, shall furnish one set of approved 24"x36" design drawings for final approval prior to commencement of any Crane fabrication and erection. The drawings shall include drawings of all structural, mechanical and electrical components, wiring diagrams and inter-connection drawings to include for the spreaders.

(3) All drawings and calculation submittals shall be provided in hard copy and electronic PDF format.

(4) Crane fabrication and erection will not commence until such time that the County has reviewed the final crane design, systems and components.

(5) The manuals shall cover Crane operation, lubrication, maintenance and inspection including but not limited to:

a) Routine and major inspections of the structure
b) Routine and special maintenance of mechanical equipment
c) Routine and special maintenance of electrical equipment

(6) As-built drawings and manuals will be furnished on a DVD in PDF format.

6.4.2 Service Shop Manuals

(1) The service manuals shall provide instructions for typical maintenance, repairs and overhaul operations of trouble-shooting, adjustment procedures, minor and major repairs and overhaul, removal and replacement of units, assemblies and subassemblies and complete instructions for disassembly and re-assembly of components. Also, the instructions shall include data listing tolerances, specifications, capacities and preventive maintenance directions. Illustrations, wiring diagrams and exploded views shall be used to clarify texts and should appear as close to the related text as possible. Special tools required for the repair and overhaul of the equipment shall be listed and illustrated.

Four (4) copies of the Service Shop Manuals shall be provided for each Crane, to include electrical schematic diagrams.

6.4.3 **Preventive Maintenance Manual**

(1) All maintenance tasks required during the life of the Crane(s) shall be included, and specific and clearly described. Each task will be listed with its location cross-referenced to a master drawing for ease of identification. Each listing will also provide the task frequency and any special parts, materials or tools required. Where parts are to be replaced, the drawing number or page number in the Service Manual shall be given along with the part reference number and/or its corresponding manufacturer's part number.

(2) Emergency operating and maintenance instructions will also be provided which clearly and definitively guide the operations/maintenance personnel through step-by-step procedures to safely and efficiently recover from emergency situations. Four (4) copies for each crane will be furnished.

6.4.4 **As-Built Drawings**

(1) Upon the Crane(s) delivery to the Port of Miami, the Contractor shall furnish one (1) complete certified set of as-built 11"x17" design drawings per Crane and an electronic copy of all as-built drawings to include detailed shop drawings of each of the parts in PDF format stored on a DVD.

(2) Additionally, the Contractor shall furnish at the time of the Crane (s) delivery, one (1) set of the as-built 11"x17" of all electrical single line diagrams drawings per Crane, each page individually plastic laminated and in the format as approved for fabrication and construction of the Crane (s). The drawings shall include electrical components drawings, wiring diagrams and inter-connection drawings to reflect the "as-built" conditions.

(3) The Contractor shall additionally provide all crane arrangement drawings in an Auto CAD 2000 "dwg" drawing format. The following individual arrangements of the front, side, back and top (plan view) shall additionally be provided:

a) Overall crane arrangements
b) Electric House
c) Machinery House
d) Trolley

6.4.5 **Oil And Lubrication Chart**

(1) The Contractor shall furnish with the delivery of the Crane a list of oil and grease lubricants suitable for the ambient temperatures and humidity conditions at the Port of Miami. The Contractor shall also supply a cross-reference to those oils and lubricants used by the Port from those supplied with the Crane.

(2) The Contractor shall provide two (2) plastic laminated 11"x17" sets per Crane of each lubrication diagrams; one to be mounted on the inside wall of the Machinery House adjacent to the work desk and the other at an approved location at the gantry level.

6.4.6 **Operations Manuals**

(1) Upon delivery of the Crane(s) to the Port of Miami, the Contractor shall provide one (1) complete set of Crane start-up procedures manual and one (1) set of Operations and Maintenance manuals per Crane and an electronic copy of all manuals and documents to include schematics in PDF format stored on a DVD.

(2) The Contractor shall provide one (1) plastic laminated 8.5"x11" set per Crane of all the electrical schematic drawings, not withstanding that the electrical schematics may be contained in the Fault Diagnostic Program and capable of being printed out.

6.5 PERSONNEL ELEVATOR

6.5.1 Provide a three (3) person (350 Kg, 770 Lbs minimum capacity) elevator to be installed on the right landside leg of the crane, looking from the backreach toward the water. The elevator shall provide access to the Main Power Cable Reel landing, Operator's Cabin and Machinery House/Electric House. No part of the elevator structure shall extend beyond the width of the sill beam, at elevations below the bottom edge of the portal beam, unless specifically approved by the County.

6.5.2 The elevator controls shall be fully automatic with automatically controlled "soft start", slow down and stop at the selected station. Provide means for safe manual lowering of the elevator. An elevator call button shall be provided at all levels adjacent to the access doors. Electrical provisions shall be in compliance with Section 5 including NEMA 4X stainless enclosures and stations. A suitable fire extinguisher shall be provided in the elevator car.

6.5.3 The elevator must traverse from the ground level to the upper most station in less than one minute. It shall have the capability to travel from the ground landing to the Electric Houselevel with intermediate stations at the Operator's Cabin and portal beam landing. The elevator shall have the capability to travel to all landing without limitations. Landing platforms shall be sized for emergency egress with stretcher. The lower landing shall be as close to the ground as possible to minimize stair height access to the lower landing.

6.5.4 The complete elevator system shall be stainless steel and hot dipped galvanized, including the mast runway, as approved by County. Elevator components may be primed and painted in accordance with the paint specification, Section 7.7. All fasteners used must be of stainless steel or as approved by County.

6.5.5 The elevator structure and all components to include access doors shall be designed to comply with wind load conditions. Under storm wind conditions, the elevator personnel cage shall be stowed at the ground landing and have the capability to be secured in place.

6.5.6 The Contractor must provide an elevator service representative to supervise the installation and commissioning of the elevator. Installation and commissioning of the elevator must be performed prior to Crane commissioning and delivery to Port.

6.5.7 The elevator is not to be used prior to the delivery of the Crane to the Port. It shall not be used until such time as the elevator supplier and the regulating agency have certified it for use at the Port.

6.5.8 The Contractor is responsible to obtain the required Miami-Dade County elevator and State of Florida certifications and any other applicable documentation and requirements.

6.6 STRETCHERS

6.6.1 One (1) industrial type, metal basket "Stokes" – type stretcher shall be provided with each Crane. The stretcher shall be mounted on the inside wall of the Machinery House adjacent to a principle access door.

6.6.2 The exact location of each stretcher shall be as required by the applicable safety regulations and the additional requirements and as approved by the County.

6.7 FIRE EXTINGUISHERS

6.7.1 All aspects of safety and occupational health shall be in full compliance with all applicable OSHA regulations.

6.7.2 Each crane shall be equipped with wall mounted, hand type UL listed carbon dioxide fire extinguishers sized and located as follows:

(1) 5 lb. CO_2 fire extinguishers

a) One (1) in the operator's cab
b) One (1) at dock level adjacent to the access stairway

(2) 10 lb. CO-2 fire extinguishers

a) Two (2) in the Machinery House
b) Two (2) in the electric house
c) One (1) in the Ground Level Monitoring Station

6.7.3 All fire extinguishers shall be mounted in plain sight and shall be easily accessible.

6.7.4 The requested fire extinguishers locations above are the minimum required by the County. However, the Contractor shall provide and install additional fire extinguishers as required by the applicable safety regulations. Signs and indicators denoting the locations of these extinguishers shall be installed in accordance with all applicable State and Local fire prevention regulations.

6.7.5 The exact location of each fire extinguisher shall be as required by the applicable safety regulations and additional requirements as approved by the County.

6.8 MAINTENANCE AIR COMPRESSOR

6.8.1 A three (3) phase, AC motor driven air compressor as manufactured by Ingersoll Rand or County approved equal, shall be furnished and installed in the Machinery House. The compressor shall be equipped with a 20 gallon minimum ASME receiver and an automatic pressure switch, pressure gauge, pressure relief valve, drain valve, automatic-manual reloader, intake filter, instruments, controls and fitted with an air dryer.

6.8.2 The air compressor shall automatically start when receiver pressure drops to 100PSI, and stop when the receiver pressure reaches 150 psi. The air receiver shall be equipped with a manual valve at the bottom for draining, and a suitable pressure gauge.

6.8.3 A hose reel shall be installed above the compressor, provided with 3/8 inch I.D., 250 psi pressure rated rubber air hose having sufficient length to reach any part of the boom machinery house and/or electrical house. Rigid pipe shall be installed from the compressor to the trolley girder to provide service connections at the boom hinge and in the back reach. Additional service connections shall be provided on the crane at landside sill beam and at the compressor. All service connections shall be spring loaded quick disconnects and be easily accessible by service personnel. The compressor and associated equipment shall be sized to maintain a pressure of 250 psig/5 CFM at each service connection.

6.8.4 A quick-connect fitting equipped, pistol grip blowgun shall also be provided.

6.9 CRANE NAME PLATES AND SIGNS

6.9.1 Separate Nameplates clearly indicating the safe working load of the Crane in long tons shall be attached to the gantry frame in conspicuous locations on portal beam. The lettering on the nameplates shall be readily legible when viewed from the dock. The size of each nameplate, lettering and location shall be subject to approval by the County.

6.9.2 Nameplates indicating safe working load (SWL) shall read as follows:

(1)	SWL UNDER SINGLE-LIFT SPREADER	50 LT
(2)	SWL UNDER TWIN-LIFT SPREADER	65 LT
(3)	SWL UNDER CARGO BEAM	100 LT

6.9.3 A separate nameplate shall be attached to each Crane indicating the Crane Manufacture's name, address, trademark, the crane serial number, and the year that the crane was placed into service.

6.9.4 The crane(s) shall be numbered in the same form as the existing Cranes at the Port. The number shall be of the same size, color and location as existing Crane(s) using specified painting requirements.

6.9.5 A Port of Miami logo shall be painted on the Crane(s) Machinery House as approved by the County. The logo shall be approximately 2 meters (6.5 ft) high and shall be the same as currently used on POM Cranes.

6.10 WELDING MACHINE

6.10.1 A rectifier-type welding machine shall be supplied with each Crane. The machine shall be a Miller "Trailblazer" or as approved by County. It shall be installed in the Machinery House as approved by County, and shall be equipped with a cord and plug to match the welding receptacles specified in Section 5.42.4. The welding machine shall be permanently fixed in the specified house and wired into the welding system outlets.

6.11 WASTE LUBE OIL DRAIN SYSTEM

6.11.1 A waste lube oil drain system shall be provided to collect and drain used oil in the Machinery House. The Trolley reducer fluids shall drain via a pipe with shutoff valve onto the Trolley when positioned under the Machinery House. The system shall consist of black iron pipe with socket welded connections, running down the Landside Crane leg on the stair and attached to the stair structure with shop-welded pipe supports. It shall be possible to drain used oil and hydraulic fluids via valves and fittings into the drain system for collection at dock level. A shutoff valve and hose connection shall be provided at dock level.

6.12 TOOLS AND WORK BENCH

6.12.1 The Contractor shall furnish for each Crane, in a lockable, steel tool box or locker, lubricant guns, oilers and all tools required for the adjustment of non-standard equipment and for any required maintenance of the crane. All of this equipment shall be new and unused. The tools and box shall be provided with the crane's delivery.

6.12.2 Each Crane shall be equipped with a 36" wide by 60" long metal frame, wood topped workbench in the boom hoist house. The workbench shall include sliding storage drawers, a 6" jaw width bench vise and shall be firmly attached to the house floor.

6.13 STORAGE LOCKERS

6.13.1 Two (2) metal storage lockers with dimensions of 36" wide by 80" high by 18" deep shall be provided with each Crane. The lockers shall be equipped with doors, shelves and bins suitable for the storage of spare parts and supplies, and shall have common-keyed locks in the door latches. All lockers will be rated for storage of flammable material.

6.13.2 One locker shall be placed in the Machinery House and one (1) in the Electrical House. All lockers shall be securely fastened to the walls of the houses.

6.14 BOOM HOIST OPERATOR'S CABIN

6.14.1 An enclosed cabin shall be provided for operating the boom. The cabin shall be located in a safe assessable area with clear visibility of all boom operations, including latches. Said cabin shall be fixed at waterside top sill beam as approved by County.

6.14.2 The cabin shall be fabricated of hot rolled steel, thermally insulated. It shall have safety glass windows on all sides to include the door. Proper ventilation shall be provided in accordance with applicable regulations.

6.14.3 All boom controls shall be located in this cabin in a waist-high console. The control console shall be constructed of stainless steel in accordance with the applicable codes and Section 5 of these specifications. Normal lighting and night lighting shall be provided as approved by County. See reference Boom Console Layout drawing included in Section 9 of these Specifications.

6.15 VIDEO CAMERA

6.15.1 A closed circuit TV (CCTV) camera system shall be provided on the Crane with a display monitor in the Operator's Cabin to permit the operator to observe the operation below and in the ship's/vessel's cells. Another display monitor shall be provided in the cranes Control Room. The display monitors shall be 24" HD mounted on antishock and vibration dampers as approved by the County. The camera's imagery shall also be viewed on the Crane's computer displays.

6.15.2 The camera shall be located beneath the Trolley to provide clear visibility for the operator directly into the ships cell to observe the hoisting and/or lowering of the spreader and/or containers there into. The camera shall be easily accessible for ease of maintenance.

6.15.3 The CCTV system shall consist of one (1) CCD (charge coupled device) color camera with low light sensitivity, two (2) 24" HD (or larger) color monitor, amplifier, camera control console, etc. The main (Master) camera controls shall be located in the Controls Room of the E-House adjacent to the CMMS.

6.15.4 The CCTV system shall be capable of continuous operation without degradation in performance under the operating environment described in these specifications.

6.15.5 System details and arrangement shall be provided to County for review and approval.

6.16 CRANE MODELS

6.16.1 The wind test model as noted in Section 3.28, two (2) 1/250 scale detailed crane models, and four (4) 1/500 scale detailed crane models shall be furnished to the County. The Models shall be provided in an approved protective clear viewing case on a wooden varnished base with a County approved name plate of the basic crane specifications. The name plate shall be mounted on the base inside of the clear case.

6.17 SPARE PARTS

6.17.1 The Contractor shall provide at a minimum the following Crane and Spreader spare parts with the initial order of four (4) Cranes' delivery:

(1) Cranes

a) Two (2) of each and every printed circuit board in the drive and crane PLC including remote I/O boards
b) Two (2) complete PLC units with flash card if it is in use but not included in above item
c) Six (6) each of every type of low voltage fuse installed on the crane
d) Six (6) of every type of low voltage circuit breaker installed on the crane
e) Four (4) spare gantry motors
f) Two (2) each of Main Hoist, Main Trolley, and Boom motors including cooling fan
g) Two (2) of each complete hydraulic cylinder and valve assembly for anti-snag system if installed on the crane
h) Two (2) load-cells and modules as used on the crane
i) Two (2) of each type power supply in control and drive system
j) Two (2) of each type Master switch (complete)
k) Four (4) additional Master switch encoders
l) Two (2) complete drive modules interchangeable with all of the drives used on the cranes

m) Two (2) of each type of pulse tachometer used on the cranes (Main Hoist, Main Trolley, Boom, Gantry, High Voltage cable reel and spreader cable reel) or four (4) pulse tachometers if Main Hoist, Main Trolley, Boom, Gantry are interchangeable and two (2) each for High Voltage cable reel and spreader cable reel
n) Two (2) each type over-speed switch used on Main Hoist
o) Two (2) each type over-speed switch used on Boom Hoist
p) Two (2) complete brake assemblies of the Main Hoist brake
q) Four (4) sets of each type of brake pads for the Main Hoist brake
r) Two (2) complete brake assemblies for the Main Trolley
s) Four (4) sets of each type of brake pads for the Main Trolley brake
t) Two (2) complete brake assemblies for the Boom Hoist
u) Four (4) sets of each type of brake pads for the Boom Hoist brakes
v) Two (2) complete brake assemblies for Gantry motor
w) Four (4) sets of each type of brake pads for the Gantry motor brakes
x) Two (2) complete brake assemblies of the Gantry Storm/Wheel brakes
y) Four (4) set of each type of brake pads for the Gantry Storm/Wheel brakes
z) Two (2) complete high speed couplings for the Main Hoist
aa) Two (2) complete High Voltage Cable reel drives,
bb) Two (2) complete Spreader Cable reel drives
cc) "Not used"
dd) Two (2) wind speed sensors
ee) Eight (8) boom flood lights with ballast
ff) Two (2) each trolley gearboxes
gg) Four (4) complete sets of gear parts for trolley gearbox
hh) Four (4) each type of gantry gearbox
ii) Four (4) complete sets of gear parts for gantry gearbox
jj) Eight (8) sets of Main Trolley wheel bearings
kk) Eight (8) Main Trolley guide roller wheels with bearings
ll) Eight (8) sets of Catenary Trolley wheel bearings
mm) Eight (8) sets of Catenary Trolley guide roller wheels with bearings
nn) Two (2) sets of gantry wheel bearings for each type of wheel
oo) Two (2) each Boom Hoist rotary Cam switches or absolute encoders
pp) Two (2) each Main Hoist rotary Cam switches or absolute encoders
qq) Two (2) each High Voltage cable reel rotary Cam switches
rr) Two (2) each Spreader cable reel rotary Cam switches
ss) Two (2) each special application limit switches such as for over-travel
tt) Two (2) each complete Festoon Cable Carrier trucks as used on the cranes
uu) Two (2) sets of all parts necessary for the Festoon Cable Carrier truck
vv) Eight (8) Main Trolley wheels
ww) Eight (8) Catenary Trolley wheels
xx) Two (2) each of the gantry driven and non-driven wheels
yy) Two (2) sets of each type of hoist sheave block
zz) Two (2) sets of Spreader Power and Control cables
aaa) Two (2) rolls, full length of Fiber Optic cables used in the festoon
bbb) Four (4) sets of Main Hoist wire ropes, tape measured
ccc) Two (2) complete Spreader Cable reel slip rings with brushes
ddd) Any other spare parts and tools recommended by the Contractor and component suppliers.

(2) Spreaders

a) Two (2) each hydraulic pump electrical motor used on the spreaders
b) Two (2) each hydraulic pump used on the spreaders
c) Two (2) each of each type of hydraulic valve set used on the spreaders
d) Sixteen (16) complete sets of twist-lock assemblies used on the spreaders (to include but not limited to twistlocks, sleeve, nut, guide, mechanical interlock, spherical washers, feeler pin, blockading key, springs, nuts, washers, keys, etc.)
e) Twenty-four (24) flippers as used on the spreaders
f) Sixteen (16) flipper actuators as used on the spreaders

g) Twelve (12) of each type relay used on the spreaders
h) Eight (8) of each hydraulic cylinder used on the spreaders
i) Four (4) of Expand/Retract Hydraulic motor
j) Four (4) of Expand/Retract gear reducers with sprockets
k) Four (4) of Expand/Retract chain idler sprockets
l) Four (4) sets of driven chain for Expand/Retract installed on the spreaders
m) Four (4) sets of each hydraulic hose with high pressure fittings installed on the spreaders
n) Eight (8) cable and hose carrier chains
o) Forty (40) of each type of SquareD limit switch with arm used on the spreader
p) Forty (40) of each type of SquareD limit arm used on spreader
q) Eight (8) Spreader expand/retract chain Tightener Assemblies/devices

6.17.2 Each spare part shall be supplied with an item number with matching cross-reference to the schematic diagrams, and a description of the part.

6.17.3 All parts and components must be identifiable commencing with the number or designation of the particular part, and trace the part back to the schematics, and the parts list in the bill of materials. All parts in assembly shall be individually listed.

6.17.4 Additionally, the drive supplier shall supply 180 days prior to shipment of the crane a recommended spare parts list for the drive system. The spare parts list shall include all critical spare parts not readily available in the local Miami market.

6.17.5 In addition to the above spare parts to be provided with the initial Crane order delivery, the Contractor shall also provide at that time, a recommended spare parts list for the first five years of each Cranes operation.

SECTION 7

MANUFACTURING

This page has been left intentionally blank.

SECTION 7 - MANUFACTURING

7.1 GENERAL

7.1.1 The Contractor shall manufacture the Crane(s) as herein specified and in accordance with all applicable codes, rules and regulations. The manufacturing shall be performed at the Contractor's facility unless otherwise approved by the County.

7.1.2 The manufacturing shall be performed in accordance with the approved drawings and Submittals. Any Work performed by the Contractor which is not approved by the County, the County reserves the right not to accept said Work. The Contractor shall be responsible for any Work and its cost not approved by County to include all corrective Work.

7.1.3 For any and all Work performed under a Contract, the Contractor shall submit for the County's approval a written Quality Control/Quality Assurance (QC/QA) Program plan. No Work shall be performed until the County approves the QA/QC program.

7.1.4 All Work shall be performed in a thorough workmanlike manner and shall follow the best modern practice in the manufacture of high grade machinery. Work shall be performed by workmen suitably skilled and certified in their particular trades.

7.2 QUALITY CONTROL/QUALITY ASSURANCE

7.2.1 It shall be the responsibility of the Contractor to maintain a Quality Control/Quality Assurance (QC/QA) Program (the "Program"). This program shall follow the guidelines established hereinafter. The Program is to include, but is not limited to providing, a qualified supervisor, qualified inspectors, required inspections, and records. This program shall assure the County that all materials and work are supplied and/or conducted in accordance with the applicable codes, approved shop drawings, this Specification, and proper work practices for the various trades.

7.2.2 The Contractor must implement the written QC/QA program that is appropriate for this Contract and shall submit it to the County within sixty (60) days prior to commencement of any manufacturing Work for review and approval. This QC/QA Program shall include approach, schedule, and personnel resumes. Resumes are to include name, title, specialty, and experience. Acceptance of quality assurance inspectors will be pending the review of resumes. Inspection of multiple trades will be allowed only if these qualifications are reflected in the resume.

7.2.3 The QC/QA Program shall include, but is not limited to, the following:

(1) Incoming material, consumables, and machinery.
(2) Traceability of material.
(3) Lifting, cutting, fit-up, welding, forming and dimensions of structural components.
(4) Welding and inspection procedures.
(5) Welding and inspection personnel qualification.
(6) Welding and inspection equipment maintenance and calibration.
(7) Heat treating, stress relieving and other special treatments.
(8) Machining, finish surfaces painting and bolting.
(9) Subcontractor's work and products.

7.2.4 At least one of the Contractor's quality control employees shall be assigned full time to each location where components are fabricated. Components such as electrical motors and gear reducers should be tested and accepted by the Contractor at the manufacturer's plant.

7.2.5 All quality assurance shall be conducted at the Contractor's expense.

7.3 INSPECTIONS

7.3.1 All inspections of the Work shall be performed in accordance with these Specifications, Scope of Work and all applicable rules, regulations and codes.

7.3.2 The County reserves the right to retain independent inspection laboratories and/or Engineers and inspectors to insure strict compliance with the terms of the Contract. The Contractor shall keep the County fully informed as to the general progress of the work and shall notify the County, three (3) weeks in advance, when any item of equipment, component, or subassembly is ready for testing. If any subassembly should be assembled by the Contractor without such notification, or without allowing the County reasonable opportunity to inspect all of its components, the County will have the right to require the Contractor to remove or disassemble the assembly in whole or in part, so that proper inspection of its components can be made. The Contractor shall bear the cost of such removal or disassembly and no extension of time to the Contract completion date for this work will be allowed.

7.3.3 All non-destructive testing, materials testing, and bolt torque testing shall be conducted by an independent testing firm (Subcontractor), as approved by the County. The Contractor is permitted the option of utilizing a Subcontractor for the entire QC/QA Program. Acceptance of Subcontractors will be subject to the same criteria stated above.

7.3.4 The County shall have free access to the mills or shops of the Contractor and its subcontractors or vendors, and shall be supplied with all drawings and specifications required to carry out the inspection. This independent inspection does not relieve the Contractor of his responsibility to carry out his own quality control.

7.3.5 Any Work, materials, or equipment not conforming to these specifications will be considered defective, whether in place or not, and will be rejected by the County or representative. Work performed from drawings or revisions thereto which have not been signed or initialed by the Contractor's responsible Structural Engineer will not be inspected and will be considered rejected. Refusal of the County to exercise such authority shall not impose any responsibility on him, and the Contractor shall remain fully responsible for the completion of his Work as specified. Defective Work shall be repaired using approved procedures.

7.3.6 No inspector is authorized to change any provision of the Specification without written authorization of the County, nor shall the inspection and approval by the County's representative, or lack of inspection and approval, relieves the Contractor from any requirements of the Contract. Inspection by the County's representative will be performed in such a manner as not to unnecessarily delay the Work.

7.4 RECORD KEEPING

7.4.1 The Contractor shall maintain a record of all Work performed in accordance with these Specifications and all applicable rules, regulations and codes. Written record of inspections shall be submitted to the County as required by this Section. Typewritten copies of each required inspection record or report shall be submitted to the County bi-weekly. All inspection forms and reports shall identify job title, contract number, crane number, type of test or inspection, location, comments, date of inspection, and the inspector's signature. Subcontractor's standardized forms will be accepted, if the above stated information is included on the forms.

7.4.2 The Contractor shall be required to submit all manufacturer's certificates and welder certificates in accordance with these Specifications.

7.4.3 All radiographic film shall be submitted to the County for review.

7.4.4 Digital progress photographs shall be taken and submitted to the County for the duration of the project. The photographs shall reflect the work being conducted in that particular week. All photographs shall be mounted in a binder, dated and labeled and forwarded via e-mail to the County at least bi-weekly. Two (2) bound copies of each submittal shall be required by the County.

7.5 CERTIFICATION OF WELDERS, OPERATORS AND PROCEDURES

7.5.1 Welders, welding operators and tackers (the "Welder") shall have been certified as qualified for the materials, processes and type of welding being performed, by an independent testing laboratory. Proof of certification of all Welders on this Project are to be submitted to the County for approval prior to commencement of any Work. No Work shall be performed until the County has approved the submitted Welder certifications. Welder certification shall be in accordance with AWS.

7.5.2 Welding procedures shall be AWS pre-qualified or they shall be qualified in accordance with AWS by the approved testing laboratory. The County shall have the option to approve the Welder testing and certification laboratory.

7.5.3 Written procedures for all welded joints shall be identified on the drawings and shall be made available to the County and all appropriate manufacturing shop personnel so they can understand and use them without referencing the applicable codes.

7.6 INSPECTION METHODS

7.6.1 The inspection methods described in this Section are acceptable to the County for this project but are not limited to those noted herein. If any additional method(s) are required but not included in this Section, the Contractor shall comply with US approved standard methods of inspection(s).

7.6.2 All weld inspections and acceptance criteria shall be in accordance with AWS requirements for dynamically loaded structures.

7.6.3 Visual Inspection

(1) This type of inspection shall be conducted with the human eye and measuring devices. Verification of proper dimensions, sizes, and work practices shall be accomplished by this type of inspection.

7.6.4 Non-Destructive Testing

(1) The extent of NDT performed by the Contractor shall be at a minimum the following, and shall comply with any more stringent requirements indicated elsewhere within this specification.

(2) All welds – 100% VT – Acceptance criteria – AWS D1.1

(3) Tension, complete penetration welds – 100% UT – Acceptance criteria – AWS D1.1 Tension shall be determined by stress levels due to operating loads.

(4) Compression; complete penetration welds – 25% UT. Acceptance criteria – AWS D1.1

(5) Fillet welds on FCM – 100% MT – Acceptance criteria – AWS D1.1

(6) Fillet welds on NFCM – 10% MT – Acceptance criteria – AWS D1.1

(7) Rejection on any portion of a weld length shall require that 100% of the weld length be inspected.

(8) This type of testing will be used to test welds and material for defects. Acceptable methods of non-destructive testing are as follows:

a) M.T. - Magnetic Particle Testing
b) Dye Penetrant Testing
c) U.T. - Ultrasonic Testing
d) Radiographic Testing (x-ray)

7.6.5 Electrical Testing

(1) The acceptable instruments for testing electrical installations are as follows:
a) Calibrated Voltmeter
b) "Ground Resistance" Test Meter
c) Light Meter calibrated in foot-candles or Lux.
d) Ammeter
e) Oscilloscope
f) Control Diagnostic Instrument with Print Out

7.6.6 Air Test

(1) This test is a pressure test to determine the air and/or watertight integrity of a specified structural member or tank. This test is accomplished by filling a member or tank with air to a pressure of 0.105 kgf/cm^2 (1.50 psi gage). Upon pressurization, a soap solution is applied to all welded joints, fittings and bolted covers. These joints shall then be visually inspected for evidence of leakage, (soap bubbles). If leaks are discovered in screwed or bolted joints, leakage shall be corrected by tightening until all evidence of soap bubbles disappears. If leaks are discovered in welded joints, the pressure shall be released before repair is initiated. Leaking welds shall be corrected by removing the defective portion of the weld by air arc gouging and re-welding. Peening shall not be accepted as a means to correct leakage in welded joints. After the weld has been repaired, the member or tank shall again be pressurized and testing shall be repeated.

(2) The testing rig shall include a calibrated pressure gauge, a positive closing valve to shut off the air supply, and a relief valve set at a pressure not to exceed the specified test pressure (0.105 kgf/cm^2). A calculated head of water to maintain the test pressure is recommended in lieu of a mechanical relief valve.

7.6.7 Water Hose Test

(1) This test is used to determine the air and/or watertight integrity of welded joints and fittings in structures which cannot be air tested.

(2) This test is accomplished by subjecting the test areas to a spray of water from a 38mm (1.50 inch) diameter hose at a pressure of 3.45 bar (50 psi gage). The nozzle of this hose is to be held a maximum of 3m from the test area.

(3) While the test areas are being subjected to the spray of water, the inspector shall visually inspect the opposite side for evidence of leakage. If leakage is discovered, these shall be corrected by the methods specified under "Air Test" and the test repeated.

7.6.8 Air Hose Test

(1) This test is to serve as an alternative to the "Water Hose Test". Test areas are to be subjected to an air flow from a 10 mm (3/8 inch) nozzle at 6.2 bar (90 psi gage). The nozzle is to be held as close as possible to the test area.

(2) A soap solution is to be supplied to the test areas opposite the areas subject to the air flow. The inspector shall then inspect for evidence of leakage, (air bubbles). If leakage is discovered, these shall be corrected by the methods specified under "Air Test" and the test repeated.

7.6.9 Chalk Test

(1) This test is to serve as an alternative for testing manhole covers for watertight integrity. This test is to be used on manhole covers where only the covers are required to be tested.

(2) Chalk is applied to the entire sealing flange edge opposite the gasket. The manhole cover will then be closed and then opened. Upon opening, the inspector shall visually inspect the gasket for a continuous chalk mark. A break in the chalk mark indicates an improper seal. This defect is to be corrected by adjustment.

7.6.10 Hydrostatic Test (Piping)

(1) This test is to determine the tightness of piping systems. The piping shall be pressurized with water to one hundred-fifty percent (150%) of the working pressure. Pumps and miscellaneous equipment in the system which are unable to withstand the test pressure are to be isolated using blanks.

(2) Upon attaining the specified test pressure, all joints in the system are to be visually inspected for evidence of leakage. If leakage is discovered, pressure shall be released from the system, and leakage shall be corrected by the methods specified under "Air Test" and the test repeated.

7.6.11 Bolt Torque Test

(1) The Contractor is to utilize the services of an independent testing firm as approved by the County to perform this test. This test is to assure the proper torques of structural and mechanical fasteners.

(2) Ten percent (10%) of all critical structural and equipment mounting fasteners, but not less than two (2) fasteners per critical connection, are to be randomly checked for proper torque values. This test must be conducted using a calibrated torque wrench. The County will require submittal of the torque records upon completion of the test for review.

7.6.12 Blueing of Mounting Surfaces

(1) This test is to verify that adjoining mounting surfaces are in proper contact.

(2) The test shall be conducted by applying a thin film of blue machinist's dye to one (1) of the adjoining surfaces. The two (2) surfaces shall be joined and separated. The surface which was not coated with dye shall be visually inspected. If this surface is not fully coated, there is improper contact. This defect shall be corrected by approved re-machining or shimming.

7.6.13 Mechanical Property Testing of Critical Structural and Mechanical Fasteners

(1) The Contractor is to submit all manufacturer's fastener certificates to the County. As a double check, the Contractor shall be required to randomly test the fastener system to verify mechanical properties. This testing shall be performed by an independent testing firm, as approved by the County, commissioned by the Contractor. The sample fastener system shall be tested for proof load, tensile strength (wedge test), and hardness. Samples are to be selected at random from each shipping lot. These samples shall include the entire fastener system. Included in the system are the bolt, nut, and washer. The quantity of samples to be tested per shipping lot are to be determined as follows:

Number of Pieces In Shipping Lot	Number of Specimens
150 or less	1
151 to 280	2
281 to 500	3
501 to 1,200	5

Number of Pieces In Shipping Lot	Number of Specimens
1,201 to 3,200	8
3,201 to 10,000	13
10,001 or more	20

(2) If any fastener in a shipping lot is found to be defective, the entire lot is to be rejected. Records of these tests shall be required by the County for review.

7.6.14 Supplemental Hardness Testing of Critical Structural and Mechanical Fastener Systems

(1) In addition to the test specified by Part K of this Section, the hardness of one random fastener per connection shall be checked. If the hardness is below tolerance for size and grade, hardness tests on the other fastener system in the connection shall be checked. If others are found to be below tolerance, proof loading tests shall be conducted on the "suspect" fastener systems. If any fails the proof loading, the connection fasteners shall be considered rejected.

7.6.15 Hydrostatic Testing (Tank)

(1) This test is to determine the watertight or oil tight integrity of a tank.

(2) The tank shall be filled with clean, fresh water until it overflows thru the overflow pipe. This will simulate a full tank. The inspector shall inspect all welded joints of the tank for evidence of leakage. If leaks are discovered, these shall be corrected by the methods specified under "Air Test" and the test repeated. Prior to correcting any welded joint, the tank shall be completely drained of all water.

7.7 FABRICATION INSPECTIONS AND TESTS (To be carried out by Contractor at Contractor's facility)

7.7.1 Structural Materials

(1) All work shall conform to the requirements of the latest edition of AWS D1.1 requirements for dynamically loaded structures, and the workmanship requirements of sub-sections of this specification. Welding procedures and electrodes shall be as required and shall conform to the applicable fabrication codes.

(2) All structural materials are to be visually inspected for any apparent defects. Size of materials is to be inspected as required.

(3) All critical structural fasteners are to be visually inspected upon receipt. In addition to visual inspection, the Contractor shall be required to test fastener systems to verify their mechanical properties as specified under "Inspection Methods".

(4) All welding electrode and flux container labels are to be inspected to verify compliance with the Specifications.

7.7.2 Structural Fabrication

(1) Structural members are to be periodically visually inspected throughout fabrication. As the fabrication of individual members is completed, the Contractor shall conduct a final inspection, before releasing that member to be painted. This inspection shall include visual inspection and non-destructive testing (NDT).

(2) All groove welds in butt joints used in tension members and members subject to reverse loadings, including flanges of members in bending, shall be inspected by both radiographic and ultrasonic testing. Unless otherwise instructed, these welds shall be

radiographed for 20% of its length and the remaining 80% ultrasonically tested. All full penetration groove welds loaded in compression shall be ultrasonically tested for 25% of their length. In the event welding defects are discovered, the amount of radiographic examination may be increased at the County's direction to 100% of the length of the welds. Testing shall be done by or under the direct supervision of properly qualified personnel. All fillet welds in members subjected to a fatigue stress range exceeding 70% of the allowable stress range shall be inspected by magnetic particle testing. In areas that cannot be reached properly with magnetic particle testing equipment, ultrasonic testing shall be used.

(3) Plates subject to through plate tension shall be 100% UT tested for lamination in the area of through plate tension. If lamination is found, it will be reported to the County and the plate shall be rejected or the Contractor shall submit a repair scheme which shall be accepted or rejected by the County.

(4) If a structural member is to be hermetically sealed, it shall first be air tested in accordance with the "Air Test" requirements prior to applying any coating to the exterior of this structure. Contractor shall maintain and submit to the County for review and approval, records of air tests.

(5) All primary structural members that are not hermetically sealed and tested by the "Air Test" method are to be either "Water Hose" or Air Hose tested prior to applying any coating to the interior or exterior of the structure. This testing shall be conducted as specified under "Inspection Methods." Contractor shall maintain and submit to the County for review and approval records of this testing.

(6) If any critical structural fastener systems are permanently installed during fabrication, torque values shall be checked in accordance with "Torque Test" requirements. Contractor shall maintain and submit to the County for review and approval records of this testing.

(7) Supplemental hardness testing of critical structural connection fastener systems permanently installed in the shop shall be tested in accordance with "Supplemental Hardness Testing of Critical Structural and Mechanical Fastener Systems". Contractor shall maintain and submit to the County for review and approval records of this testing.

7.7.3 Welding Inspection

(1) Welds shall meet the requirements of AWS D1.1.The specific method of weld inspection shall be shown on the drawings.

(2) Testing of tension butt splices shall be done by or under the direct supervision of a certified technician from a testing lab, as approved.

(3) Defective welds shall be corrected in accordance with Section 9.4 of AASHTO "Guide Specifications for Fracture Critical Non-Redundant Steel Bridge Members".

(4) Mill test certificates for all materials shall be supplied to the County and shall identify the component or assembly that the material is intended for.

7.7.4 Mechanical Materials

(1) Certificates for mechanical stock and wire rope proof loads shall be submitted to the County for review.

(2) Purchased machinery is to be visually inspected for apparent defects or damage upon receipt.

(3) All castings, forgings, pins, and axles shall be non-destructively tested (NDT) by an independent testing firm. Acceptable test methods are "Ultrasonic Testing" (U.T.) and

"Radiographic Testing" (x-ray). Contractor shall maintain and submit to the County for review and approval records of these tests.

(4) Mechanical property testing shall be conducted on all critical mechanical fastener systems. These tests shall be conducted in accordance with the mechanical property test requirements. Contractor shall maintain and submit to the County for review and approval records of this testing.

7.7.5 Mechanical Fabrication

(1) All fabricated machinery parts shall be inspected for compliance with the approved shop drawings, applicable codes, and proper machinist practices.

(2) Measurements of critical machined surfaces shall be required to verify compliance with the approved shop drawings. Contractor shall maintain and submit to the County for review and approval Records of these measurement inspections shall be submitted to the County for review and concurrence.

(3) Installation of all major machinery shall be inspected to verify proper mounting and alignment. Contractor shall maintain and submit to the County for review and approval records of machinery installation inspections.

(4) Critical mechanical fasteners shall be torque tested in accordance with "Torque Testing" requirements, after machinery installation. Contractor shall maintain and submit to the County for review and approval records of the Torque Testing.

(5) Supplemental hardness testing of critical mechanical connection fastener systems permanently installed in the shop shall be tested in accordance with "Supplemental Hardness Testing of Critical Structural and Mechanical Fastener Systems". Contractor shall maintain and submit to the County for review and approval records of this testing.

(6) Prior to shipping, all major mechanical components and machinery shall be shop tested to demonstrate proper working order. Shop testing is to include, but is not limited, to all travel assemblies and all hoist drives. Equipment will be allowed to be tested without the full reeving of drums and sheaves. All sheaves are to be moved by hand to determine proper free-movement. Rope clearances shall be inspected in the shop. Contractor shall maintain and submit to the County for review and approval records of all shop testing shall be required by the County.

7.7.6 Painting Materials

(1) The Contractor's Inspector shall verify that all paint complies with the Specifications upon receipt from the manufacturer.

7.7.7 Paint Application

(1) All blasted surfaces are to be visually inspected prior to coating applications.

(2) Each coat of a paint system shall be visually inspected to verify application in accordance with the Cleaning and Coating Section.

(3) Dry film thickness readings shall be taken for each coat of a paint system. These readings shall be taken every two square meters. Ten percent (10%) of all readings shall be taken on surfaces not easily accessible, such as inside stiffener angles. Records of these readings shall be required by the County. These records shall indicate the crane number, member, type of paint, and color.

(4) All painted surfaces are to be inspected prior to shipping. If any damaged coatings are found, they shall be repaired prior to shipping.

7.7.8 Electrical

(1) Electrical components, such as wiring, conduit, motors, transformers, and generators, shall be inspected for damage and defects upon receipt from the manufacturer.

(2) Shop wiring shall be visually inspected for compliance with the electrical specifications, approved wiring diagrams, applicable codes, and proper wiring practices.

(3) All motors are to be checked for proper rotation and wiring prior to shop testing. Equipment shall be subjected to applicable vibration tests and records shall be submitted to the County for review and concurrence. Lighting shall be shop tested prior to shipping for verification of proper working order.

7.8 SURFACE PREPARATION AND PAINTING

7.8.1 This Section shall govern the procedures the Contractor shall follow in surface preparation and painting of the Crane(s) from initial component fabrication, assembly, erection and on-site installation as specified herein. The Contractor shall be responsible for all Work described in this Section.

7.8.2 General

(1) All surfaces of the Crane shall be painted except machinery and electrical equipment that have been completely finished by the manufacturer or equipment supplier, wire rope, power cable, bearing surfaces, non-ferrous surfaces and other areas as may be designated and approved by the County. Mating surfaces of high-strength slip critical bolted connections shall be coated only with coatings qualified to provide the slip co-efficient required by the connection design in accordance with Research Council on Structural Connections "Test Method to Determine the Slip Coefficient for Coatings Used in Bolted Joints". The Contractor shall provide supporting documentation if faying surfaces of slip critical connections are coated. Non Ferrous metals, machine surfaces and surfaces in sliding or rubbing contact will not be coated, unless otherwise specified by County.

(2) Paint shall be furnished in the paint manufacturer's original unopened and clearly identifiable containers with the expiration date (shelf life) clearly labeled. No mixing of different paints shall be permitted.

(3) The paint shall be handled, mixed, thinned (only if necessary and recommended by the paint manufacturer), and applied in accordance with the paint manufacturer's recommendations. All painting shall conform to the Steel Structures Painting Council (SSPC) and National Association of Corrosion Engineers (NACE) Specifications and to the applicable portions of these Specifications.

(4) After fabrication, all structural steel and unfinished surfaces of castings and forgings shall be thoroughly cleaned and painted. Shop painting shall consist of surface preparation and the application of the primer coats.

7.8.3 Surface Preparation

(1) Prior to fabricating, all surfaces shall be commercial blast cleaned by sand and/or grit blasting to SSPC-SP-6-63 commercial blast cleaning standard. All materials will have ¾ to 1 mil of zinc rich pre-construction weldable primer applied for protection during fabrication and shall not to be considered a part of the Paint System. As determined by the paint manufacturer and approved by the County, all pre-construction priming must be completed within six (6) hours of blast cleaning. No deterioration of the blasted surface will be acceptable. Exterior surfaces and welds, after fabrication, will be cleaned by sand and/or grit blasting to provide a clean, oil free surface for paint application.

(2) All surfaces that are to be coated shall be cleaned to remove all oil, grease, dirt, dust, grit, or other contaminants that will impair the coating system.

(3) Prior to sandblasting or centrifugal blasting, welds shall be given special attention for removal of welding flux in crevices. Welding spatter, sliver, scabs, and underlying mill scale not removed during fabrication and exposed before and during the cleaning operation shall be removed by the best mechanical means. Exposed edges shall be rounded to assure proper adhesion and build-up of paint.

(4) The primer shall be applied simultaneously after the surface preparation. The intermediate paint coat will be applied as recommended by paint manufacturer and must comply with the painting requirements as set forth by these specifications.

(5) All mil thickness references are minimum dry film thickness. Testing shall be performed with a wet film gauge during application and rechecked after drying with a dry film gauge.

(6) Minimum and maximum drying time shall be in accordance with manufacturer's recommendations for all coatings.

7.8.4 Paint Coating Application

(1) Primer Coat: Immediately after cleaning (maximum of six (6) hours), apply one coat of primer paint to all blasted surfaces including all surfaces prepared for painting, 2.0 mil dry film thickness. Interior surfaces of box girders shall be painted with two (2) coats of primer. Total dry film thickness of both coats shall be not less than 3.5 mils. Faying surfaces shall be primed but shall not be over-coated. The paint shall be allowed to dry fully before additional coats are applied; the minimum drying time shall be at least that recommended by the paint manufacturer.

(2) Intermediate Coat: Shall be applied on the primed surfaces. The intermediate coat shall be applied at the crane fabrication plant as much as feasible to comply with painting requirements.

(3) The Final Coats: Shall be applied at the fabrication plant with UV protection during erection and after completion as approved by County.

(4) Painting of components and joints not assembled at the crane fabrication plant may have the painting applied in the field (Port of Miami) only as approved by the County.

(5) Painting shall be performed by skilled paint technicians in a neat and good workmanlike manner as recommended by the paint manufacturer and these specifications. Each coat of paint shall be applied uniformly without running, streaking, sagging, wrinkling, or incurring any other defects. Each coat of freshly applied paint shall present an appearance of uniform coverage, proper gloss and good masking characteristics. Each coat of paint shall be dry before the succeeding coat is applied. The paint shall be well worked into all joints, open spaces, laps, seams, bolts, nuts and edges.

(6) Shop application of paint may be done by spray, brush or roller in accordance with the paint manufacturer's explicit instructions.

(7) Field application of paint may be done by brush or roller, either on the dock or when completely erected.

(8) Paint shall not be applied when the air temperature is below 40° F and relating humidity is not within the acceptable level, when the air is misty, or when in the opinion of the County, conditions are otherwise unsatisfactory for the work. Paint shall not be applied upon damp, frosted or dusty surfaces. If these conditions occur, the surface(s) to be painted must be prepared again.

(9) Each coat is to be applied uniformly and completely over the entire surface. Skims, skips, sags and drips will be rejected, and will require re-preparation of the surface and repainting to the County's satisfaction.

(10) All joints, crevices, and cavities that have not become sealed in a watertight manner by the first coat of paint shall be filled with suitable filler that is compatible with the paint system. Brush or spatula shall apply the filler before the field coat (s) are applied. The filler material shall be approved by County.

(11) A touch-up coat (or full coat, as the case may be) of primer paint shall be applied to all surfaces that do not have a full coat of shop applied primer. This includes such as welds, bolts, splice plates, surfaces where damaged shop paint has been removed by cleaning, and any other surfaces where low mil film thickness have been detected. This coat of primer shall have a minimum of 3.0 mils dry film thickness.

(12) The Contractor shall exercise care in the protection of the following parts of the Cranes. These parts shall not be painted unless prior approval is obtained from the County:

a) Windows and light fixtures
b) Machined surfaces that rub or bear. This includes bushings, equalizer pins, screw threads, brakes, and brake drums.
c) Wire rope.
d) Electrical equipment and accessories, including motors, generators, festoon cable, umbilical and controls.
e) Anti- friction bearings, bearing seals, reducers, chain drives and belt drives.
f) Breathers, vents and air filter.
g) Seals and Gaskets
h) Nameplates, builder's plaque and other labels.
i) Hydraulic equipment.

(13) The above items shall be masked or otherwise suitably protected during blasting and painting of adjacent areas. Extreme care shall be taken to guard against damage to moving parts of machinery by mill scale, brittle paint film, or other materials of a generally abrasive nature when removed from the crane by cleaning.

(14) The materials used in the coating system will be supplied by one of the listed manufacturers. The Contractor shall provide a five (5) year warranty underwritten by the paint manufacturer for labor and materials. The Contractor shall submit the proposed warranty for County's review 90 days before start of paint application. The system will be as specified herein. The finish colors shall be semi-gloss type with the paint scheme as currently used in the Port. See attached drawings for paint scheme specifics.

(15) Representatives of the paint supplier shall be on site to qualify the Contractor's application of the paint system. A sufficient number of the paint supplier's properly trained representatives/inspectors shall be on site full time to monitor and inspect all application of the coating system. These inspectors shall witness and inspect all paint application Work at the Contractor and any/all subcontractor sites. No paint Work shall be performed at either the Contractor's or the subcontractor(s)'s site(s) without the paint supplier's inspector(s) present to confirm full compliance with the coating system application requirements. The paint supplier shall submit regular inspection reports to County stating the results of the paint application, and shall certify that all application has been performed in accordance with their requirements.

7.8.5 Paint Supplier And System

(1) The paint shall be produced by an experienced manufacturer with prior experience in manufacturing paint of this type. The paint shall have a satisfactory service history for similar applications. Lead content of paint shall not exceed levels allowed by applicable US codes and standards. The materials entering into the composition of paints shall conform to the requirements of the Steel Structures Painting Council (SSPC) Paint and National Association of Corrosion Engineers (NACE) Specifications. The paint shall be shipped in strong, new commercial containers of not larger than five (5) gallons capacity. All containers shall be plainly marked with the name of the material, color,

expiration date, quality contained therein, and the name and address of the manufacturer. Any package or container not so marked will not be accepted for use under these Specifications. The date and manufacturer's lot number shall be stamped or stenciled on every package.

(2) Paint manufacturer and paint materials shall be approved by the County prior to any primer or painting being applied.

7.8.6 Qualified Paint Manufacturers

(1) The Contractor shall use one of the following industrial marine Paint Manufacturer's/Suppliers which have been Pre-Qualified by the County to supply the coating products, oversee surface and paint preparation, paint application and the costs shall be included in the Contractor's proposed price. Deviation from this list of Pre-Qualified Paint Manufacturers/Suppliers shall be considered only upon the request of the Contractor which shall provide all required qualifications as previously used and which proposed Supplier has numerous years of providing the paint products and services at Ship-to-shore Gantry Crane manufacturing and Erection facilities.

a) Carboline
Contact: Luiz Martinez
6471 Main Street, No. 304
Miami Lakes, Fl 33014
Ph. 305-796-3211
e-mail: lmartinez@carboline.com

b) International Paint, LLC
Benny Carter
2305 Park Lane
Valdosta, Ga 31602
Ph. 229-247-0240
e-mail: benny.carter@internationalpaint.com

c) Sherwin Williams
Michael Malcer
1200 NW 78th Avenue, Suite 401
Miami, Fl 33126-1835
Ph: 305-331-0846
e-mail: mike.malcer@sherwin.com

d) ICI Devoe Coatings
Robert Wolf
ICI Paints
Store Division
3069 Anderson Snow Rd. PMB413
Spring Hill, Fl 34609
Ph. 813-363-6669
e-mail: bob_wolf@ici.com

(2) The above Paint Manufacturers/Suppliers have been pre-qualified and have inspected the Cranes to establish existing paint conditions, recommend surface preparation methods, paint system, and procedures and equipment to be used by the Contractor in conjunction with this contract.

7.8.7 Painting System

(1) Finish coat colors and Logo details shall be specified below in attachment drawings.

(2) The colors shall be as follows:

RAL COLOR CARD NO.	COLOR NAME	AREA(S) TO BE PAINTED
RAL5018	Turquoise Blue (T. Blue)	Boom Trolley Girder, Trolley Support Structure, Trolley Motors, Reducers and Covers, Walkways and Handrails at Trolley Motor Level.
RAL9010	Off White	Crane Structure, Pylons, Stays, Beams, Cabins, House Walls and Roof only, etc.
RAL1003	Signal Yellow	Boggies, Lower Equalizer Beams, Gantry Motors, Reducers, Shaft Covers and Appurtenances, Guard Rails and Stairs at ground level up to same level as Lower Equalizer Beams, and Head Block.
RAL7030	Stone Gray	Flat Walking surfaces on top of boom, girders, portal beam, etc.
RAL 5017	Traffic Blue	Shadow for 'Port of Miami' sign on Boom Trolley Girder.

Note: One mil is equal to 0.001 inch (0.0254 mm) or 25.4 microns.

7.8.8 Touch Up And Inspection

(1) The Contractor shall touch-up scratches and/or marred areas after the erection of the crane and installation of components. The damaged and repaired areas shall be powered brushed or disc sanded, overlapping slightly onto the intact coating, creating an anchor pattern that will lend itself to the proper adhesion of the new application of primer. If blast cleaning is used, it shall be used with caution to avoid damaging the existing surface coating and protect (properly cover) any components which may be damaged from the blast medium.

(2) The Contractor shall properly grind and polish the damaged metals surfaces (repaired areas) to "Near White" and clean with a County approved solvent cleaner prior to applying the primer coat. The County shall approve and accept all "touch-up" painting.

(3) Touch up areas shall have a full paint system as specified to match original finish.

(4) Any damage to the finish coat subsequent to application shall be touched up prior to loading of Crane on to transportation vessel and prior to Final Acceptance.

(5) A minimum of 5 gallons per crane of each color and type of paint used shall be furnished to the County upon completion of Contract.

(6) During the progress of the work, the Contractor shall provide the County the means of ready access to all parts of the work such as scaffold, ladders or any required aids to facilitate the work of inspection. The specified dry film thickness of each coat of each kind of paint may be checked by the County using film thickness gauges of the Nordson or other types. Any damage caused by the tests shall be repaired by the contractor at the contractor's expense.

(7) The representative of the paint manufacturer shall be allowed access to the site(s) at any time to inspect and/or consult with the painting personnel or sub-contractor in order to insure that the paint is being properly applied.

7.8.9 Galvanizing

(1) After complete fabrication, the specific component shall be hot dipped zinc coated in accordance with ASTM A 123 for fabricated items and to ASTM A 153 for hardware.

Damaged areas shall be repaired in strict accordance with the manufacturer's recommendations in compliance with the regulating standards.

(2) The Contractor shall warrantee all galvanizing work for a minimum of ten (10) years.

7.8.10 County Inspection

(1) All work is subject to inspection by County or Representative at any time.

(2) The Contractor shall submit for County review, the individual Product Data Sheets for each product used to confirm correct application, dry film thickness, thinning, mixing, handling and cleaning instructions

(3) The Contractor is required to provide County access to equipment necessary for inspection (i.e. elevated work platforms, staging, climbers and etc.), including final inspection.

(4) If County or Representative becomes aware of work being performed in conflict with the requirements of this specification, the County reserves the right to order all work to be stopped. The Contractor will be allowed to resume work only after existing deficiencies have been corrected to the satisfaction of the County.

(5) Any work found to be deficient, damaged or otherwise unacceptable shall be repaired in accordance with the paint manufacturer's written recommendations at Contractor's expense.

(6) The Contractor is required to observe inspection hold points to allow County or its Representative adequate time for inspection prior to continuation of cleaning and/or painting operations.

(7) Inspection hold points shall be as follows; however, all cases shall be agreed upon at a pre-Work conference or prior to the beginning of any Work specified herein:

a) Completion of surface preparation prior to prime coat application.
b) Completion of prime coat application prior to intermediate coat application.
c) Completion of intermediate coat application prior to finish coat application.
d) Completion of finish coat application prior to repair of defects and prior to final acceptance of work by the County.

(8) The County or its Representative will make every attempt to minimize damage to newly painted areas during inspection activities, but any damage caused shall be repaired by the Contractor in accordance with these Specifications.

(9) Inspection and/or acceptance of Contractor's work by County and/or its Representative in no way releases Contractor from any terms and conditions of the Contract Agreement.

(10) All dry film thickness (dft) measurements shall be made in accordance with Steel Structures Painting Council SSPC-PA2.

(11) The Contractor shall submit for the County's review the individual Product Data Sheets for each product used to confirm correct application, dry film thickness, thinning, mixing, handling and cleaning instructions.

7.9 COMMISSIONING AND PERFORMANCE TESTS

7.9.1 The Contractor shall perform commissioning, testing and certification of all the equipment, component and certification as reasonably possible, of the Crane, at its manufacturing facility prior to loading on the transportation vessel. Prior to commissioning and testing, all systems must be complete and functional. The Contractor shall prepare formal Test and Check-out Procedures manual for all required tests and submit them to the County for approval, ninety

(90) days prior to scheduled tests. These test procedures will prove the compliance of the Crane(s) to the Specifications. The Contractor shall successfully complete performance tests and provide the test reports to the County for review and concurrence.

7.9.2 The Contractor shall coordinate and schedule the inspection to determine and document all deficiencies on the Project's Deficiencies Punch List. All deficiencies on this Punch List shall be repaired in compliance with the Specifications prior to loading of the Crane on to the transportation vessel.

7.9.3 Upon successful completion of the Crane erection, installation and start-up, the County will conduct an inspection to document the deficiencies. This inspection will identify remaining Work, missing parts and defects. The Contractor's Inspector(s) will accompany the County during this inspection.

7.9.4 A punch list will be compiled by the County indicating items found during the inspection. This list will be distributed to both the County and the Contractor. Acceptance will not be considered until all items noted in the punch list have been supplied or corrected to the County's satisfaction. The Contractor's Inspector shall verify correction of all punch list items before requesting the County for a subsequent inspection.

7.9.5 Painting and Touch-up Painting

(1) Any areas requiring painting (touch-up) shall be coated and painted in accordance with SSPC requirements and those of Section 7.8. No deviation shall be accepted. It is a requirement of these Specifications to properly grind and polish the metals surfaces (repaired areas) to "Near White" and clean with an County approved solvent cleaner prior to applying the primer coat. The County shall approve and accept all "touch-up" painting.

(2) After the application of any touch-up coat, an inspection of this coating shall be conducted. Total dry film thicknesses shall be taken and recorded as specified in this Section. Thicknesses are to comply with those specified in the coating Section of this Specification. Records of the readings shall be submitted to the County for review and concurrence.

7.9.6 Safety Test

(1) The Contractor shall operate the Crane(s) without load in each mode at full rated speeds to establish integrity of all limit switches, back up limit switches, interlocks lights, and controls to the satisfaction to the County.

7.9.7 As-Built Testing and Verification

(1) The Contractor shall verify that the Crane(s) as-built wheel loads comply with the specified maximum dock/rail loads prior to final load certification. This shall be accomplished by jacking all wheels (together) on the waterside corners until they are clear of the rails and determining the wheel loads by means of load cells or calibrated hydraulic pressure gages on the jacking system. This procedure will be repeated for the landside wheels, jacking all wheels together. The Contractor shall submit a written test procedure for the County's review and concurrence at least six weeks prior to testing and a written report of the results.

(2) If the results of this testing reveal that the as-built condition of the crane do not comply with the specified structural, mechanical or electrical standards as set forth by these Specifications, or if the maximum dock/rail loadings are exceeded, it shall be the responsibility of the Contractor to make any necessary changes to the Crane to bring it back into compliance. Any proposed corrective action must be approved in writing by the County prior to implementation.

7.9.8 Speed and Power Test

(1) The Contractor shall complete the following operations and record the measurements of voltage, amperage of the drive motors, and the operational speeds of the functions during these operations.

a) Raise and lower the boom at normal speed. Operate all boom latches and check the operation of all limit switches.

b) With an empty telescoping spreader, run all motions at full speeds to the limits of their travel. Slowdown and end limit switches are to be checked by running each motion at full speed into its extremes of travel, depending solely on the limit switches to slow and stop that particular motion.

c) In accordance with US OSHA requirements, perform certification load tests as required for the rated capacities of crane. Perform any other proof or overload tests as required by applicable local codes and regulations for rated capacities.

d) With loads of fifty (50) and sixty-five (65) long tons under the spreader, repeat operation (2) above at full speed and measure the acceleration forces for the most severe conditions.

7.9.9 Cycle Time Test

(1) The Crane(s) shall hoist a certified weight of 50 long tons simulating as closely as possible the theoretical duty cycle as defined in Section 2.7. Duration of this test shall be no less than one (1) hour. Should down time occur during this test, the test will be repeated until the one (1) hour duration is accomplished.

7.9.10 65LT Thermal Capacity Test

(1) The Crane(s) shall hoist a certified weight of 65 long tons simulating as closely as possible the theoretical duty cycle as defined in Section 2.7. Duration of this test shall be no less than four (4) hours. Should down time occur during this test, the test will be repeated until the four (4) hours duration is accomplished.

7.9.11 Endurance Test

(1) The Crane(s) shall be operated through cycles of placing and removing fully loaded containers. The Crane(s) shall be demonstrated to be able to hoist, lower, hold in any position, and transport the container at rated speed and accelerations. With a fifty (50) long ton test load, position and lower telescoping spreader to container position on dock, lock spreader to container, hoist approximately ten (10) meters, travel trolley to position over a barge (may be substituted or waived), lower load to barge and unlock. Lift empty spreader to clear container, lower to container, lock and carry load back to dock. Unlock and lift empty spreader to clear container. This cycle is to be repeated continuously for twelve (12) hours, the last eight (8) hours of which are to be trouble free. The Contractor shall correct all malfunctions that develop and these corrections shall be made to the satisfaction of the County and without affecting the guarantee.

(2) The testing and adjustments specified shall be made by the Contractor in accordance with this Specification.

(3) During the full load and overload testing, measurements are to be taken of speed, voltage and amperage at the drive motors as follows: (A report of these readings shall be furnished to the County.)

a) Main Hoist Motor
   i. Raise spreader only.
   ii. Lower spreader only.
   iii. Raise at 100% load.

iv. Lower at 100% load.
v. Raise at overload.
vi. Lower at overload.

b) Main Trolley Motor(s)
i. Travel inboard-spreader only.
ii. Travel outboard-spreader only.
iii. Travel inboard at 100% load.
iv. Travel outboard at 100% load.
v. Travel inboard at overload.
vi. Travel outboard at overload.

c) Gantry Motors
i. Travel right-spreader only.
ii. Travel left-spreader only.
iii. Travel right with 100% load.
iv. Travel left with 100% load.
v. Travel right with overload.
vi. Travel left with overload.

d) Boom Motor(s)
i. Raise boom.
ii. Lower boom.

(4) Wind velocity and direction of the wind, as well as the mean temperature, shall be taken and recorded at the time of test.

(5) In addition, strip charts of master switch reference, motor current, motor voltage, motor torque and speed shall be made with a chart recorder supplied by the Contractor. The readings and chart recordings shall be submitted to the County in a clear and easy to comprehend format prior to acceptance of the Crane.

(6) During the endurance test, a chart recording of motor current, motor voltage, and motor speed at a chart speed of 5mm/second for one complete cycle shall be made for the main hoist and another for the trolley motor. The portion of the cycle shall be logged on the chart recording.

(7) Note: For all tests, the Contractor will provide all necessary test loads including test container, barge, and test loads. The Contractor shall also furnish test load frames, operators, and labor required for the tests.

7.9.12 Electrical Systems Operational Test

(1) Prior to the Acceptance/Performance Test, the following systems or equipment shall be tested and reported as herein specified.

a) Verify that the taps on all transformers are set to deliver voltage indicated in the Contract Documents with the system in full operation. This test shall be conducted with a calibrated voltmeter.

b) Each grounding point shall be tested after all connection to ground points are made but before grounding conductor connection is made to the frame. Ground point installations shall be tested by "fall of potential" measuring method using ground resistance test meter.

c) All electrical systems shall be tested for compliance with the Specifications. The Contractor shall provide personnel and equipment required to assist the County or its representative in conducting the tests.

d) Equipment covers such as panel boards, trims, motor control covers, device plates and junction box covers shall be removed for inspection of internal wiring.

All circuits throughout the project shall be energized and tested for operation and equipment connections tested for in compliance with Contract Documents.

e) Additional Acceptance Tests

i. Illumination Tests; Illumination readings shall be taken and recorded in the work areas specified in the Lighting Section. These readings shall be taken with all machinery in operation and during the night time hours.

ii. Climate Control Tests; All climate controls shall be demonstrated to verify proper operation. Temperature in climatically controlled spaces shall be measured and recorded.

iii. Vibration tests

7.9.13 Functional Tests

(1) The following equipment shall be tested to demonstrate proper operation.

a) Maintenance Lockouts
b) Communication Equipment
c) Signals, alarms, and by-passes
d) Gantry Stowage Pins, Tie Downs and other Stowing Devices
e) Boom Latching System
f) Manlift (personnel elevator)
g) Interface of Gantry Bumpers with other Cranes and Dock Bumper
h) Safety systems (anti-collision, overload, etc.) and by-passes

7.9.14 Crane Weight - Corner Load Requirement

(1) The completed Crane shall be weighed at the Contractor's manufacturing facility prior to loading of the Crane on to the transportation vessel and the center of gravity of the Crane shall be established with the boom in the up and down position. As verification of contractor wheel load and stability calculations, the Contractor shall also measure, at manufacturing facility the wheel loads at all four (4) corners for each of the following conditions:

a) With boom stowed and trolley in normal stowed park position.
b) With boom stowed/raised with empty trolley at maximum operating outreach.
c) With boom stowed/raised with empty trolley at park position between land side and water side rails.
d) With boom stowed/raised with empty trolley at maximum operating back reach.
e) With boom in the normal lowered operating position and with empty trolley at maximum operating outreach.
f) With boom in the normal lowered operating position and with empty trolley at park position between land side and water side rails.
g) With boom in the normal lowered operating position and with empty trolley at maximum operating back reach.

(2) At completion of Crane weight measurements at the Contractors manufacturing facility, an "As Built" set of wheel load calculations shall be submitted for the County's review based on Crane weights and center of gravity determined by the wheel load measurements. The "As Built" wheel loads based on measured weights and center of gravity shall not exceed the wheel load allowable of Section 2.6.3. The Contractor shall provide a detailed analysis to the County to explain any differences between the calculated wheel loads and weighed wheel loads when the difference is greater than 3%.

(3) The complete weight of Main Trolley with Operator's Cabin and all equipment required for normal operation shall be determined by measurements before installing the Trolley on the Trolley rails.

7.9.15 Boom Tip, Trolley Rail and Gantry Gage Measurements

(1) Boom tip elevation and levelness measurements shall be made prior to shipment.

(2) Rail trolley gage and trolley rail alignment measurements shall be verified prior to shipment.

(3) Gantry wheel gage (of trucks) and alignment shall be verified prior to shipment.

(4) The Contractor shall establish the method of measuring the deflections under "No Load" and "Rated Load" conditions and shall submit the method to County for review during the design review of the Cranes.

7.9.16 Crane Structure, Boom and Girder Deflection and Torsion

(1) The Contractor shall establish the method of measuring the deflections under "No Load" and "Rated Load" conditions as required in Section 3.4 (Structural Deflection, Torsion and Stiffness) and shall submit the method to County for review during the design review of the Cranes. The actual results of the test performed at the manufactures facility during commissioning shall be submitted to the County for review.

(2) The Contractor shall establish the method of measuring the natural frequency under the conditions required in Section 3.4 (Structural Deflection, Torsion and Stiffness) and shall submit the method to County for review during the design review of the Cranes. The actual results of the test performed at the manufactures facility during commissioning shall be submitted to the County for review.

This page has been left intentionally blank.

SECTION 8

SHIPPING AND DELIVERY

This page has been left intentionally blank.

SECTION 8 - SHIPPING AND DELIVERY

8.1 GENERAL

8.1.1 The Crane shall be fully fabricated, assembled and made operational at the Contractor's Manufacturing Facility. This may be at the Fabrication Site or at another site selected by the Contractor and approved of by the County. Field erection at the delivery site (Delivery Site) generally consists of placing the erected Crane on the rails by roll-off from transportation vessel or other approved unloading methods, removing all necessary bracing, etc., used for the shipment, making necessary repairs and adjustments, touch up painting, re-commissioning, testing and certification, clean up of the Work Site and delivery of the Crane(s) to the Port of Miami for commercial service.

(1) Except for repair of damage items such as anchoring points, platforms, walkways, stairs and ladders, field welding and painting will not be allowed. Prior to repair of damage to any components of the Cranes and structural members, the Contractor shall submit his methods of repair for review by the County.

8.1.2 The Contractor shall obtain all necessary permits required to unload, install and test the Crane(s). Unless otherwise agreed to by the County, The Contractor shall also obtain all contract laborers, stevedores, security guard services, fire watches, telephone, utilities, and all supplies needed for the unloading, installation, testing, certification and delivery of the Cranes.

8.1.3 The Contractor shall provide, a full time, qualified Shipping Engineer approved by the County who shall insure that the loading on to ship, transportation, off load and installation of the Crane(s) is performed in accordance with manufacturer's recommendations and the requirements of these Specifications.

8.1.4 A qualified start-up Commissioning Engineer from the Contractor or control system manufacturer and the Contractor's engineer(s) as approved of by the County, shall be provided at the delivery site during delivery, installation, re-commissioning, acceptance testing, certification and initial crane (commercial) service to assure that all crane systems to include the control system is set up and adjusted in accordance with the manufacturer's requirements and these specifications for optimum performance.

8.2 CONTRACTOR SUBMITTALS

8.2.1 Sixty (60) days prior to shipment, the Contractor shall submit for the County's review, the preliminary shipping and delivery schedule, plans and calculations for loading the Crane(s) on the vessel, securing the Crane(s) on the vessel, and off loading the Crane(s) at the Port of Miami. The Contractor's Shipping Engineer shall prepare, review, and sign all calculations for shipping and erection. The loading, securing and shipping plan shall be submitted and approved by the County prior to loading of the Crane(s) on to the transportation vessel.

8.3 LOADING AND SHIPPING

8.3.1 The Contractor shall not load the fully erected Crane(s) onto the transportation vessel until the loading, securing and shipping plans have been submitted and approved by the County.

8.3.2 The Contractor shall load onto the transportation vessel the fully erected Crane(s) at Manufacturing Facility, stow the Crane(s) on the vessel, secure/restrain to vessel and transport the Crane(s) to the Port of Miami, the delivery site. The Crane(s) shall be secured on the vessel to prevent any undue stresses that would affect the Crane(s) and its expected life. Standard design sea loading criteria shall be used to analyze the Crane's structure for the voyage.

8.3.3 All mechanical and electrical equipment shall be properly covered and secured to prevent damage from movement, rain, rouge waves, moisture, etc. Component and motor heaters

shall be installed as required and shall be powered along with those on the Crane(s) during the entire time on the vessel and voyage.

8.4 PRE-SHIPMENT CERTIFICATE

8.4.1 The Crane(s) shall not be removed and transported from the Manufacturing Facility until the Contractor has completed all possible and commissioning work and functional/acceptance testing as required by these Specifications. The Contractor shall provide the required transportation insurance certificates to the County prior to loading of the Crane(s) onto the vessel.

8.5 DELIVERY AND UNLOADING

8.5.1 The Contractor shall be responsible for the transportation of the Crane(s) from the Manufacturing Facility to the Delivery Site at the Port of Miami. The Contractor is directly responsible for all coordination and access approvals for entrance into US waters and the Port of Miami harbor. The Contractor transportation vessel access to the Port shall be coordinated with the Port's Berthing office, Biscayne Bay Pilots and all appropriate organizations to include USCG and USCBP.

8.5.2 The transportation vessel shall berth as instructed by the Port's Berthing office and the unloading work shall be performed so as to not impede the Port's ongoing vessel unloading and loading operations and any other ongoing stevedoring operations or Port work. The Port's operation shall take first priority. The County shall not be responsible for any damages and delays to the Contractor or shipper.

8.5.3 The Contractor shall be allotted a ten (10) calendar days berth usage restriction for the delivery ship at the Port of Miami Lummus Island Container Terminal gantry berth for the delivery and unloading of two (2) Cranes on to the Delivery Site. The County will permit an additional ten (10) day dock usage restriction for the ship if three (3) or more cranes are delivered to the Port at the same time. Any additional time required shall be requested by the Contractor and approved by the Port Engineer.

8.5.4 The Contractor shall unload and place the erected Crane(s) on the rails at the location designated by the County, the Delivery Site, by roll-off or other approved methods. The Unloading Plan and Dock Loadings shall be submitted to the County for approval at least sixty (60) days prior to shipment. No Crane unloading Work shall be performed until the Unloading Plan and Dock Loadings is approved by the County.

8.5.5 The vessel shall remain in Port for as long as it is required to enable it to unload the Crane(s). The vessel shall depart the Port as required by regulating authorities.

8.6 FINAL INSTALLATION, COMMISSIONING AND TESTING

8.6.1 Prior to start up for final commissioning and functional/acceptance testing at the Port, the Crane(s) shall be inspected for deficiencies and shall be lubricated in accordance with the lubrication charts. The Contractor's field engineer shall inspect and certify that all areas, including bearings and motors, are properly lubricated and that the Crane is ready for start up and testing. Start-up and testing shall be accomplished, as much as possible, at the Fabrication Site to minimize the amount of time required at the Port.

8.6.2 The Contractor shall have qualified field project engineer along with the drives vendor electrical startup field engineer at the job site at all times, when the work is in progress. The field engineer shall ensure that all field work is in accordance with the approved designs and that all tests are in compliance with the approved procedures and the original equipment manufacturer's recommendations. The field project engineer and the electrical vendor electrical startup field engineer shall be fluent in the English language. They shall have demonstrated their qualifications by each successfully completing five (5) similar crane projects within the past five (5) years.

8.6.3 The Contractor shall make the necessary final installations, repairs, adjustments and calibrations prior to commencement of delivery site Crane start-up and commissioning, including verification of proper operation of all safety devices and interlocks.

8.6.4 The Contractor shall perform any remaining and required commissioning, testing and certification of all the equipment, component and certification in accordance with these specifications to include Section 7.9. Prior to final commissioning and testing, all systems must be complete and functional. The Contractor shall use the same previously approved and used Test and Check-out Procedures manual. The Contractor shall successfully complete these tests at the County's site, including an 8 hour, trouble free endurance test and provide the test results reports to the County for review and concurrence.

8.7 FINAL INSPECTION AND PUNCH LIST

8.7.1 Upon successful completion of the operational tests, an inspection shall be conducted by the County. This inspection shall identify remaining work, missing parts and defects. The Contractor's Inspector is to accompany the County during this inspection.

8.7.2 The Contractor shall coordinate and schedule a final inspection to determine and document all deficiencies on the Project's Deficiencies Punch List. All deficiencies on this Punch List shall be repaired in compliance with the Specifications prior to Final Acceptance.

8.7.3 A punch list will be compiled by the County indicating items found during the inspection. This list will be distributed to both the County and the Contractor. Final acceptance will not be considered until all items noted in the punch list have been supplied or corrected to the County's satisfaction. The Contractor's Inspector shall verify correction of all punch list items before requesting the County for a subsequent inspection.

8.7.4 Structural

(1) Upon delivery of the Cranes to the Port of Miami, the structure and machinery shall be inspected for any damage incurred during shipping. These inspections shall be conducted in the presence of the County. Contractor shall maintain and submit to the County for review and approval reports of these inspections.

8.7.5 Electrical

(1) All electrical equipment and wiring is to be inspected prior to the start of the operational tests.

8.7.6 Painting

(1) Any areas requiring painting (touch-up) shall be coated and painted in accordance with SSPC requirements. No deviation shall be accepted. Proper grinding and polishing of metals to "Near White" and cleaning with solvent prior to applying the primer coat is a requirement of these Specifications. The County shall approve and accept all "touch-up" painting.

(2) After the application of any touch-up coat, an inspection of this coating shall be conducted by the County. Total dry film thicknesses shall be taken and recorded as specified in this Section. Thicknesses are to comply with those specified in the coating Section of this Specification. Contractor shall maintain and submit to the County for review and approval records of the readings.

8.8 CERTIFICATION

8.8.1 The Contractor shall perform all actions necessary to obtain certification required by the Regulatory organizations in order to place the Crane and crane elevators in service.

8.8.2 The Crane(s) shall be certified in accordance with regulations of the local governing agencies and OSHA. It shall be the responsibility of the Contractor to have this certification made by an

accredited individual or organization. The tests and inspection made by the accredited individual or organization shall be combined with the above acceptance tests. The Contractor shall furnish to the accredited individual or organization a copy of the test procedure at least two (2) weeks prior to the tests.

8.8.3 The Cranes' elevator certification will comply with County and State of Florida requirements.

8.8.4 The Contractor shall furnish the County with a copy of the certificate on the wire ropes, compressed air tank or air compressor.

8.8.5 The Contractor must provide material certifications for all structural, mechanical and electrical components as applicable, to the County for review and concurrence. The certifications shall be provided to the County prior to acceptance of the part and/or component as specified in but not limited to Section.

8.9 ACCEPTANCE PROCEDURES

8.9.1 Before final payment is made as stipulated in the Contract, the Contractor shall repair any malfunctioning equipment, replace any defective parts or components, make good on any defects, flaws, and deficiencies revealed and/or noted in the Punch List by the inspection and tests, and demonstrate the acceptability of all repaired or replaced equipment under new tests.

8.10 CLEAN UP AND FINAL ACCEPTANCE

8.10.1 The Contractor shall repair any damage occurring as a result of the shipping and delivery activities of the Crane(s) and related equipment. This includes damage to fender systems, curbs, dock surface, pavement, and utilities. All debris resulting from his activities shall be removed and disposed of off-site. A final inspection by the County and the Contractor shall include the clean up of the Delivery Site by the Contractor. Prior to final acceptance, all "Punch List" items for the Crane(s) and the clean-up of the Delivery Site shall be satisfactorily completed as reasonably acceptable by the County.

SECTION 9
TECHNICAL ATTACHMENTS

Attached Technical Drawings, sketches and Schematics follow.

This page has been left intentionally blank.

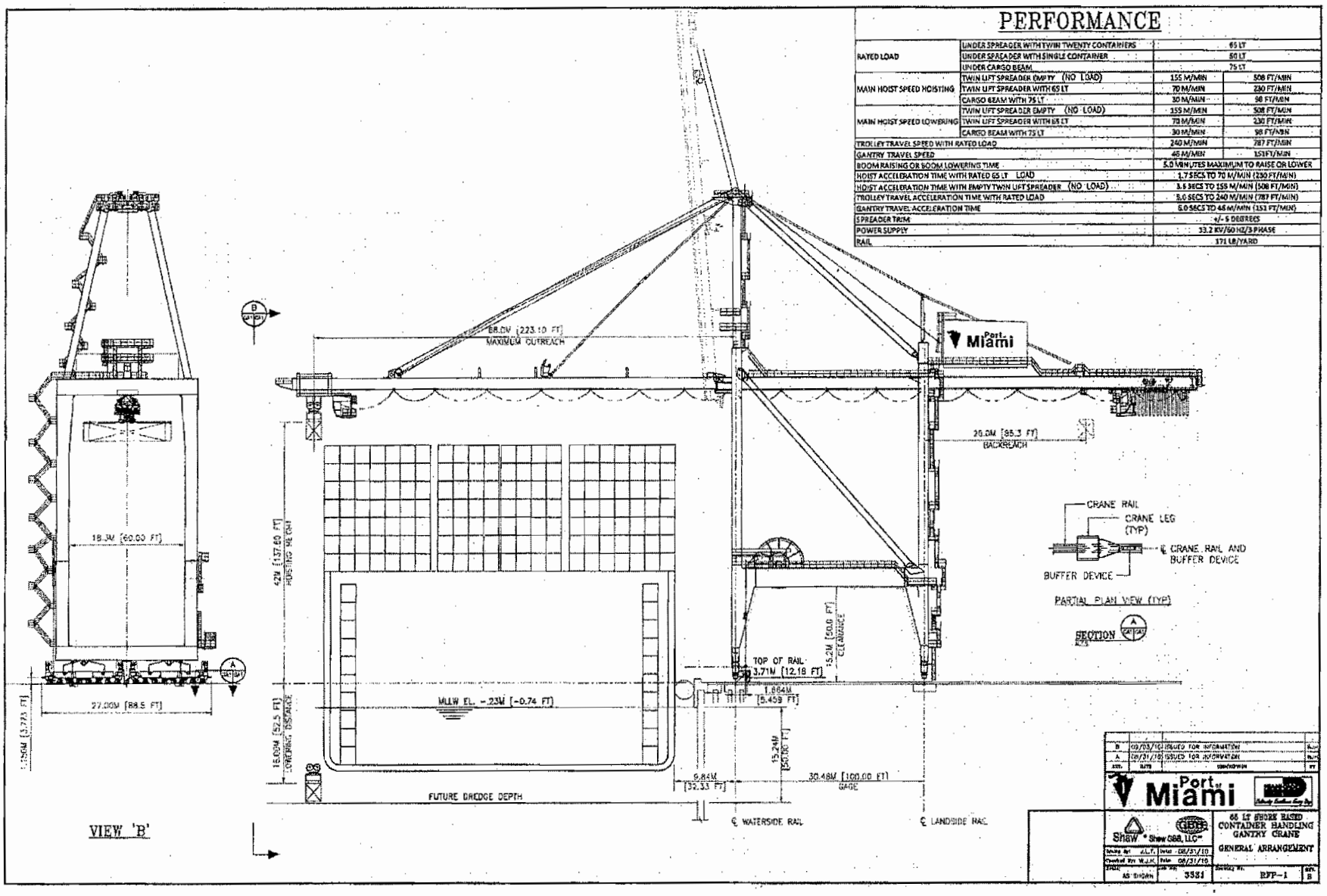

PERFORMANCE

RATED LOAD	UNDER SPREADER WITH TWIN TWENTY CONTAINERS	65 LT	
	UNDER SPREADER WITH SINGLE CONTAINER	50 LT	
	UNDER CARGO BEAM	75 LT	
MAIN HOIST SPEED HOISTING	TWIN LIFT SPREADER EMPTY (NO LOAD)	155 M/MIN	508 FT/MIN
	TWIN LIFT SPREADER WITH 65 LT	70 M/MIN	230 FT/MIN
	CARGO BEAM WITH 75 LT	30 M/MIN	98 FT/MIN
MAIN HOIST SPEED LOWERING	TWIN LIFT SPREADER EMPTY (NO LOAD)	155 M/MIN	508 FT/MIN
	TWIN LIFT SPREADER WITH 65 LT	70 M/MIN	230 FT/MIN
	CARGO BEAM WITH 75 LT	30 M/MIN	98 FT/MIN
TROLLEY TRAVEL SPEED WITH RATED LOAD		240 M/MIN	787 FT/MIN
GANTRY TRAVEL SPEED		46 M/MIN	151FT/MIN
BOOM RAISING OR BOOM LOWERING TIME		5.0 MINUTES MAXIMUM TO RAISE OR LOWER	
HOIST ACCELERATION TIME WITH RATED 65 LT LOAD		1.7 SECS TO 70 M/MIN (230 FT/MIN)	
HOIST ACCELERATION TIME WITH EMPTY TWIN LIFT SPREADER (NO LOAD)		3.5 SECS TO 155 M/MIN (508 FT/MIN)	
TROLLEY TRAVEL ACCELERATION TIME WITH RATED LOAD		5.0 SECS TO 240 M/MIN (787 FT/MIN)	
GANTRY TRAVEL ACCELERATION TIME		5.0 SECS TO 46 M/MIN (151 FT/MIN)	
SPREADER TRIM		+/- 5 DEGREES	
POWER SUPPLY		33.2 KV/60 HZ/3 PHASE	
RAIL		171 LB/YARD	

212

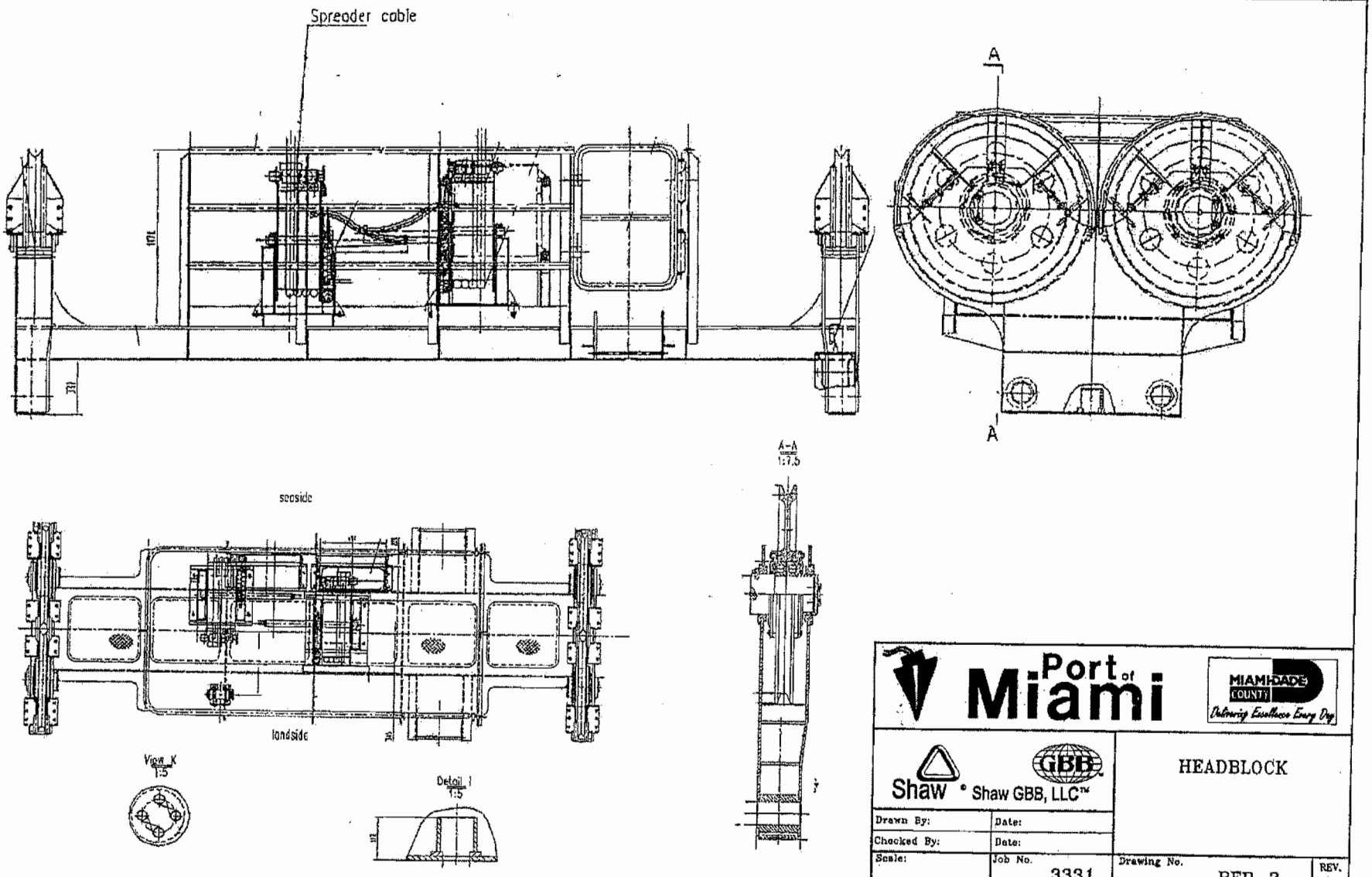

Port of Miami

MIAMI-DADE COUNTY
Delivering Excellence Every Day

Shaw • Shaw GBB, LLC™

GBB

HEADBLOCK

Drawn By:	Date:		
Checked By:	Date:		
Scale:	Job No. 3331	Drawing No. RFP-2	REV. A

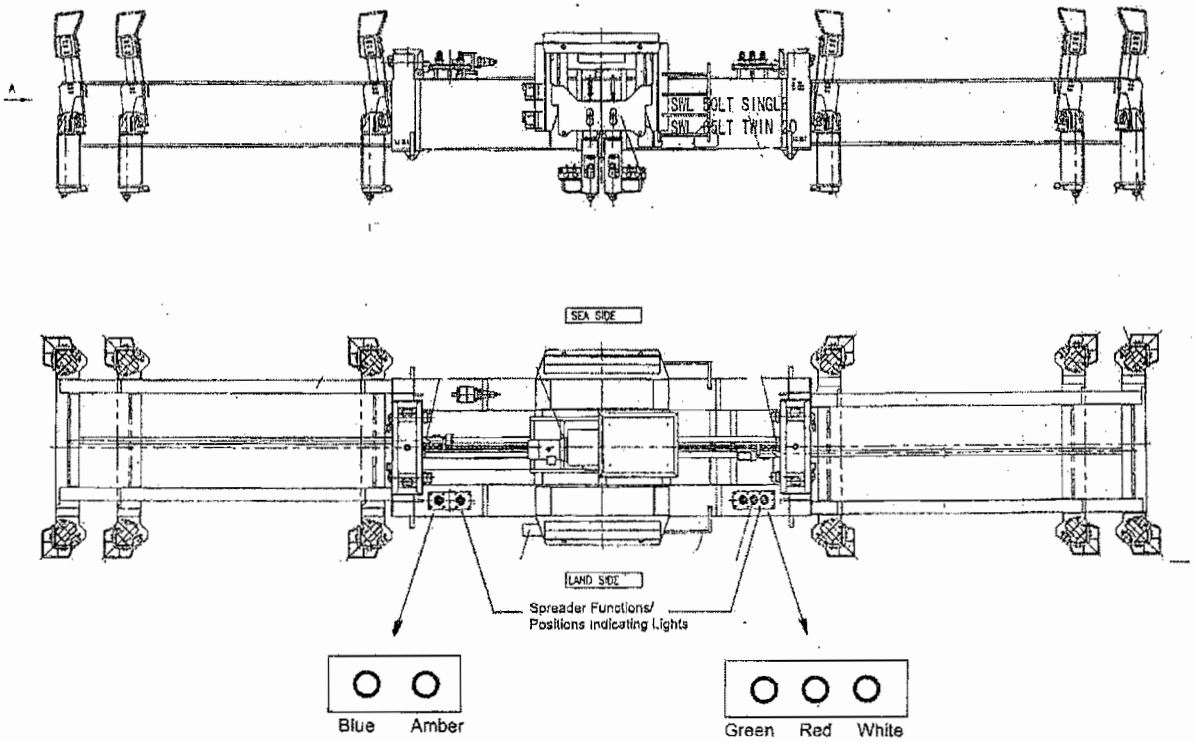

VIEW A/A

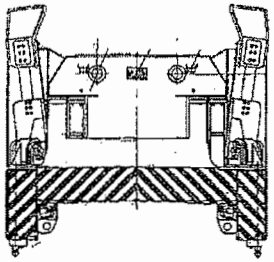

Port of Miami

MIAMI-DADE COUNTY
Delivering Excellence Every Day

Shaw · Shaw GBB, LLC™

SPREADER INDICATING LIGHTS ARRANGEMENT

Drawn By:	Date:		
Checked By:	Date:		
Scale:	Job No. 3331	Drawing No. RFP-3	REV. A

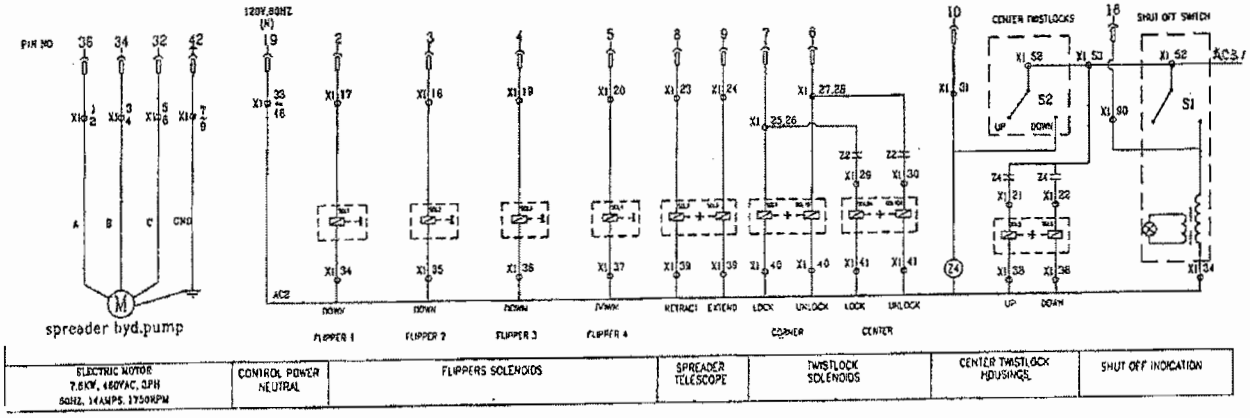

ELECTRIC MOTOR 7.5KW, 460VAC, 3PH 60HZ, 14AMPS, 1750RPM	CONTROL POWER NEUTRAL	FLIPPERS SOLENOIDS	SPREADER TELESCOPE	TWISTLOCK SOLENOIDS	CENTER TWISTLOCK HOUSINGS	SHUT OFF INDICATION

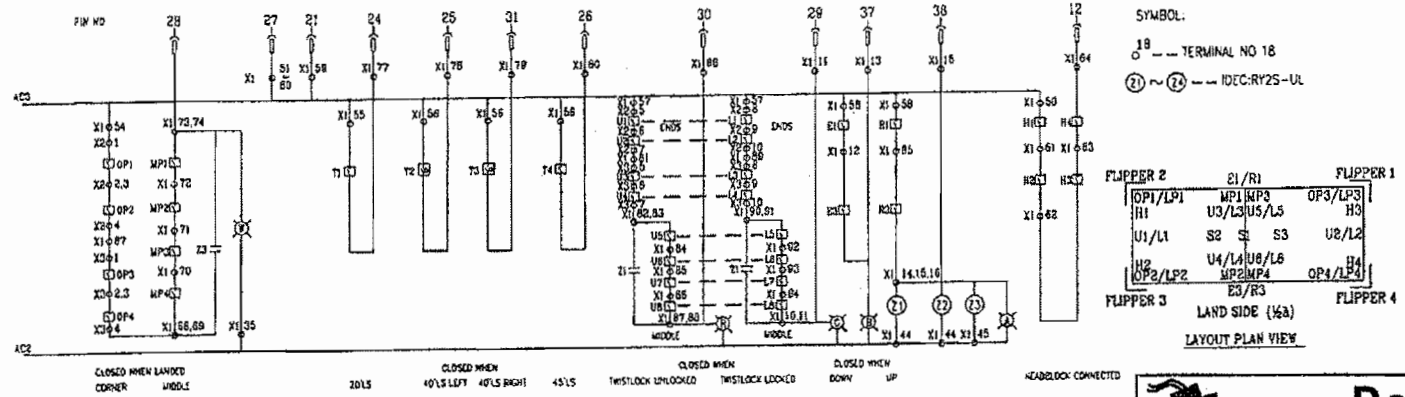

PLUNGERS	CONTROL POWER (120V,60HZ(L)	PLUG IN	TELESCOPE	LOCKS	TWISTLOCK HOUSING

225,226,227 SPREADER. 65 LT DRAWING CAME WITH SPREADERS

Port of Miami

MIAMI-DADE COUNTY Delivering Excellence Every Day

Shaw GBB Shaw GBB, LLC™

SPREADER WIRING DIAGRAM

Drawn By:	Date:		
Checked By:	Date:		
Scale:	Job No. 3331	Drawing No. RFP-4 1of2	REV. A

PIN NO.	WIRE NO.	FUNCTION	PIN NO.	WIRE NO.	FUNCTION
1	42	SPARE	22	9	SPARE
2	19	FLIPPER 1 DOWN	23	10	SPARE
3	20	FLIPPER 2 DOWN	24	11	20' SPREADER
4	21	FLIPPER 3 DOWN	25	12	40' LEFT SPREADER
5	22	FLIPPER 4 DOWN	26	13	45' SPREADER
6	23	UNLOCK TWISTLOCKS	27	14	120V,60HZ(L)
7	24	LOCK TEISTLOCKS	28	15	SPREADER LANDED
8	25	RETRACT SOLENOID	29	16	TWISTLOCK LOCKED
9	26	EXPAND SOLENOID	30	17	TWISTLOCK UNLOCKED
10	27	TWIN TWENTY DOWN FROM CAB	31	6	40' RIGHT SPREADER
11	28	SPARE	32	1	MOTOR PHASE C
12	29	HEADBLOCK CONNECTED	33	2	SPARE
13	30	SPARE	34	3	MOTOR PHASE B
14	31	SPARE	35	4	SPARE
15	32	SPARE	36	5	MOTOR PHASE A
16	41	SHUT OFF INDICATION	37	35	TWIN DOWN SIGNAL
17	33	SPARE	38	36	TIWN UP SIGNAL
18	34	SPARE	39	37	SPARE
19	18	SOLENOIDS NEUTRAL	40	38	SPARE
20	7	SPARE	41	39	SPARE
21	8	SPREADER CONNECTED	42	40	GND

RECEPTACLE: PYLE-NATIONAL ZREP-28-339PN

Port of Miami

MIAMI-DADE COUNTY Delivering Excellence Every Day

Shaw ® Shaw GBB, LLC™

SPREADER WIRING DIAGRAM

Drawn By:	Date:		
Checked By:	Date:		
Scale:	Job No. 3331	Drawing No. RFP-4 2of2	REV. A

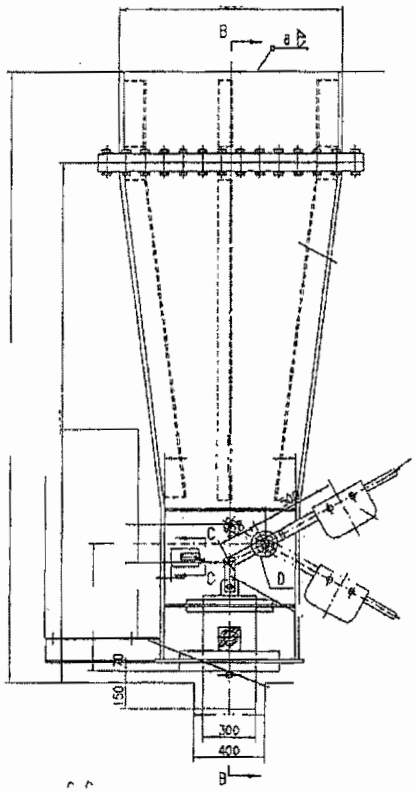

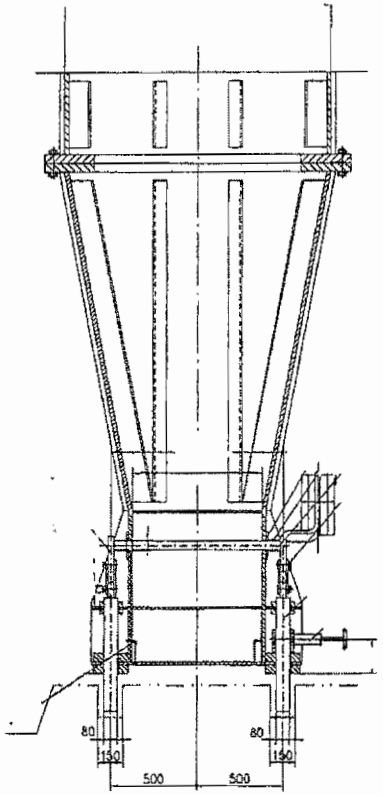

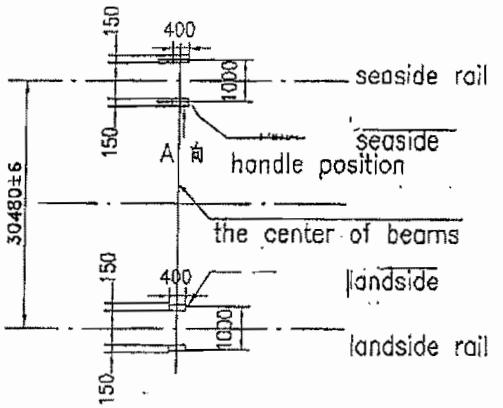

anchor clamp arrangement

View A
1:10

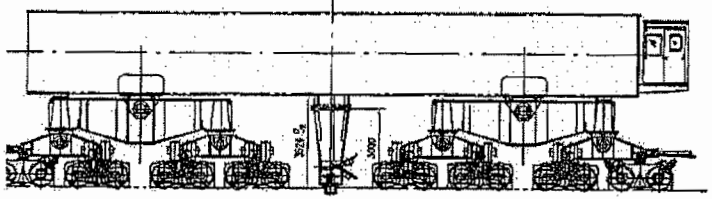

Port of Miami

MIAMI-DADE COUNTY
Delivering Excellence Every Day

Shaw · Shaw GBB, LLC™

GBB

STOWAGE PIN ARRANGEMENT

Drawn By:	Date:		
Checked By:	Date:		
Scale:	Job No. 3331	Drawing No. RFP-5	REV. A

View A
Enlarged

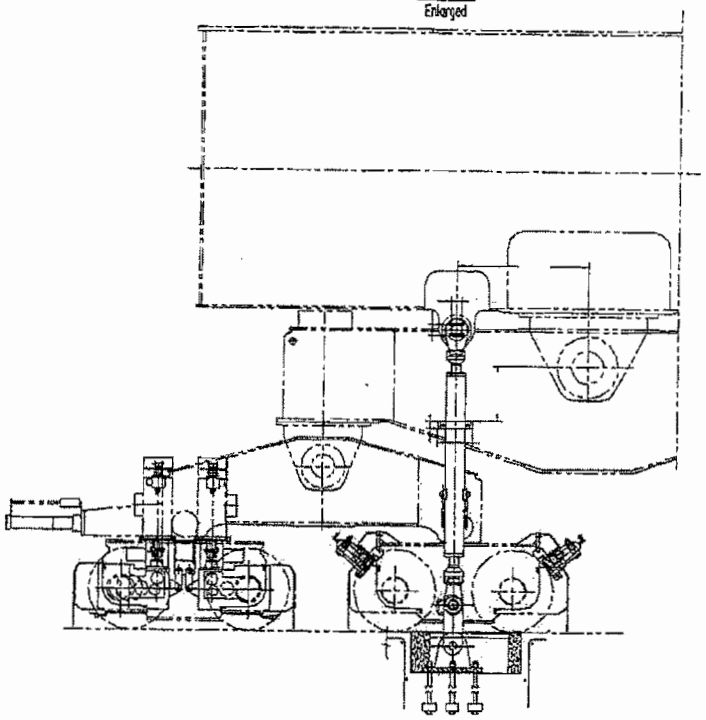

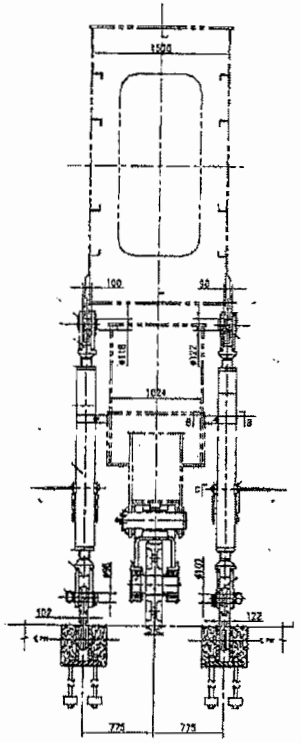

Tie Down Arrangement

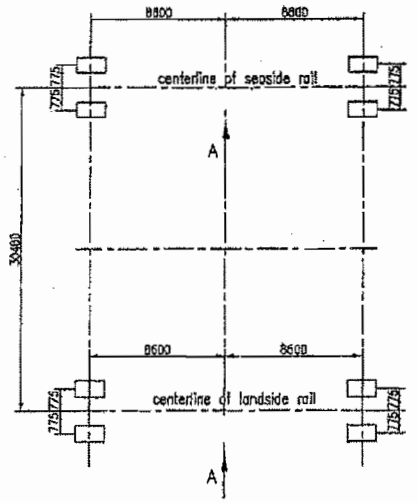

View A

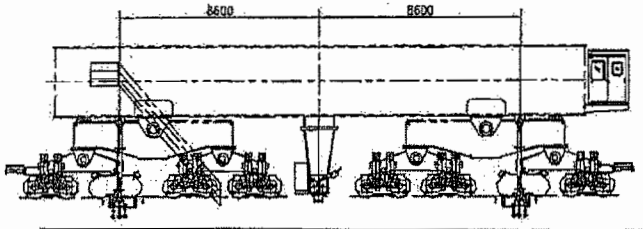

Port of Miami

MIAMI-DADE COUNTY
Delivering Excellence Every Day

Shaw ® Shaw GBB, LLC™

GBB

TIE DOWN ARRANGEMENT

Drawn By:	Date:		
Checked By:	Date:		
Scale:	Job No. 3331	Drawing No. RFP-6	REV. A

219

1.2.1 +CAO.1.1, Operator's Cab Chair, Left Console

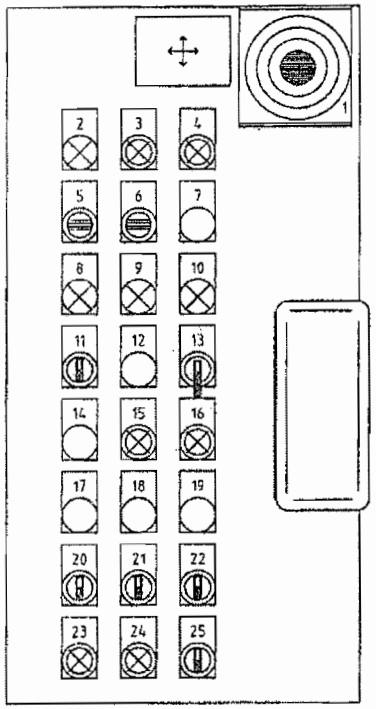

1 "TROLLEY FORWARD - BACKWARD"
Master switch, Absolute Encoder, 6 Bit

1 "GANTRY LEFT - RIGHT"
Master switch, Absolute Encoder, 6 Bit

2 "SPREADER LANDED"
Indication light, White

3 "SPREADER TWISTLOCKS LOCK"
Illuminated pushbutton, green

4 "SPREADER TWISTLOCKS UNLOCK"
Illuminated pushbutton, red

5 "FLIPPERS WATERSIDE UP - DOWN"
Toggle switch 2-pos, maintained

6 "FLIPPERS LANDSIDE UP - DOWN"
Toggle switch 2-pos, maintained

7 "TRIM ZERO LEVEL"
Pushbutton, black

8 "SPREADER 45 FEET"
Indication light, Yellow

9 "SPREADER 40 FEET"
Indication light, Yellow

10 "SPREADER 20 FEET"
Indication light, Yellow

11 "SPREADER TELESCOPE EXT - RETR"
Selector Switch 3-pos, spring return

12 "SPREADER FEELER PINS BYPASS"
Pushbutton, Black

13 "HOIST SLACK ROPE BYPASS"
Selector Switch 2-pos,Long level, spring return

14 "SPREADER CABLE JOG UP"
Pushbutton, black

15 "DOCK SLOWDOWN SETPOINT"
Illuminated pushbutton, yellow

16 "SPREADER PUMP ON"
Illuminated pushbutton, green

17 "SPREADER CABLE JOG DOWN"
Pushbutton, black

18 "DOCK SLOWDOWN OVERRIDE"
Illuminated pushbutton, yellow

19 "SPREADER PUMP OFF"
Pushbutton, black

20 "OPERATION MODE CARGO – CONT – REEVE"
Selector Switch 3-pos, short lever maintained

21 "SPREADER TWINLIFT UP/DOWN"
Selector switch, 2-pos short level maintained

22 "SPREADER TWIN EXTEND - RECTRACT"
Selector switch, 3 pos, key removable left , spring return

23 "FLOOD LIGHTS ON – OFF"
Pushbutton Black

24 "TROLLEY FLOOD LIGHTS ON – OFF"
Pushbutton Black

25 "SPREADER CABLE DRUM AUTO – MANUAL"
Selector Switch 2-pos, maintained

Port of Miami

MIAMI-DADE COUNTY
Delivering Excellence Every Day

Shaw © Shaw GBB, LLC™

OPERATOR
LEFT CONSOLE
ARRANGEMENT

Drawn By:	Date:		
Checked By:	Date:		
Scale:	Job No. 3331	Drawing No. RFP–7	REV. A

1.2.2 +CAO.1.2, Operator's Cab Chair, Right Console

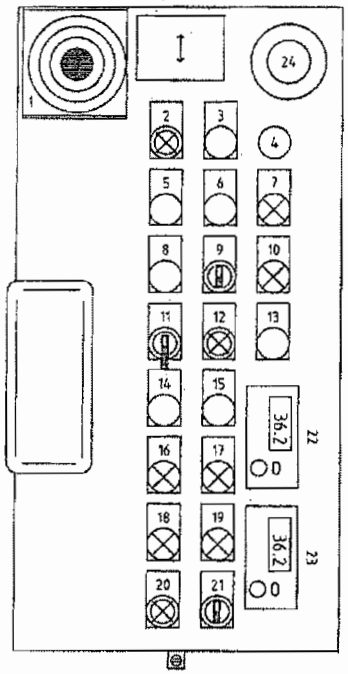

1 "MAIN HOIST DRIVE; LOWER-RAISE"
Master switch, Absolute Encoder, 6 bit

1 "SPREADER TILTING, TRIM LEFT - RIGHT"
Master switch, Absolute Encoder, 6 bit

2 "CONTROL ON"
Illuminated pushbutton, Green

3 "ALARM HORN"
Pushbutton Black

4 "SPARE"

5 "CONTROL OFF"
Pushbutton Black

6 "HIGH WIND BYPASS"
Pushbutton, black

7 "WIND SPEED WARNING"
Indication light, yellow

8 "LAMPTEST"
Pushbutton, black

9 "WHEEL BRAKE SET-AUTO-RELEASE"
Selector switch 3-pos, short level maintained

10 "WIND SHUT DOWN"
Indication light, red

11 "EMERGENCY DRIVE SELECTED OFF-MH-TR"
Selector switch 3-pos, short level maintained

12 "FAULT ALARM RESET"
Illuminated pushbutton, Red

13 "TARE WEIGHT"
Pushbutton, black

14 "SELECTED EMERGENCY DRIVE UP/WS"
Pushbutton, black

15 "SELECTED EMERGENCY DRIVE DOWN/LS"
Pushbutton, black

16 "MAIN HOIST 1 OVERLOAD"
Indication light, red

17 "MAIN HOIST 2 OVERLOAD"
Indication light, red

18 "MAIN HOIST NOT SYNCHRONIZED"
Indication light, yellow

19 "TROLLEY NOT SYNCHRONIZED"
Indication light, yellow

20 "TROLLEY PARKING POSITION"
Illuminated pushbutton, Green

21 "WIND SHIELD WIPER"
Selector switch 3-pos

22 "LOAD WEIGHT"
Digtal meter

23 "WIND SPEED"
Digtal meter

24 "EMERGENCY STOP"
Pushbutton red, latched mushroom actuator

Port of Miami

MIAMI-DADE COUNTY
Delivering Excellence Every Day

Shaw * Shaw GBB, LLC™

OPERATOR
RIGHT CONSOLE
ARRANGEMENT

Drawn By:	Date:		
Checked By:	Date:		
Scale:	Job No. 3331	Drawing No. RFP-8	REV. A

1.3 +CAO.3, Operator's Cab Indication Station 1

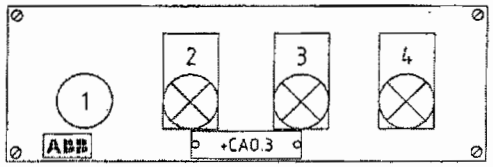

1 "SPARE"

2 **SPREADER LANDED"**
Pilot light, yellow

3 **SPREADER TWISTLOCKS; UNLOCKED"**
Indication light, green

4 **SPREADER TWISTLOCKS; LOCKED"**
Indication light, red

Device	Function description
1	**"SPARE"**
2	**"SPREADER; LANDED"** Indicating light for spreader landed (feeler pins actuated). Indicates with a steady light that the spreader is landed
3	**"SPREADER; TWISTLOCKS UNLOCKED"** Indicates with a steady light that all twistlocks are in unlocked position.
4	**"SPREADER TWISTLOCKS; LOCKED"** Indicates with a steady light that all twistlocks are in locked position

Port of Miami

MIAMI-DADE COUNTY Delivering Excellence Every Day

Shaw © Shaw GBB, LLC™

CABIN INDICATING LIGHT #1 ARRANGEMENT

Drawn By:	Date:		
Checked By:	Date:		
Scale:	Job No. 3331	Drawing No. RFP-9	REV. A

1.4 +CAO.4, Operator's Cabin Indication Station 2

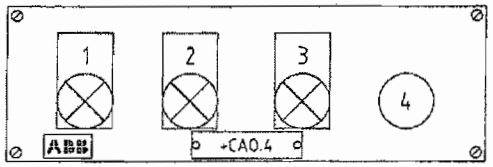

1 "HOIST SLACK ROPE"
Indication light, yellow

2 "CENTER HOUSING DOWN"
Indication light, blue

3 "CENTER HOUSING UP"
Indication light, yellow

4 "SPARE"

Device	Function description
1	"HOIST; SLACK ROPE" Slack rope is indicated by the load cells or limit switches.
2	"CENTER HOUSING DOWN" Indicates that the twin twent center housing is in down position
3	"CENTER HOUSING DOWN" Indicates that the twin twent center housing is in up position
4	"SPARE"

Port of Miami

MIAMI-DADE COUNTY
Delivering Excellence Every Day

Shaw · Shaw GBB, LLC™

CABIN INDICATING LIGHT #2 ARRANGEMENT

Drawn By:	Date:		
Checked By:	Date:		
Scale:	Job No. 3331	Drawing No. RFP-10	REV. A

1.5 +BCO.1, Boom Control Station

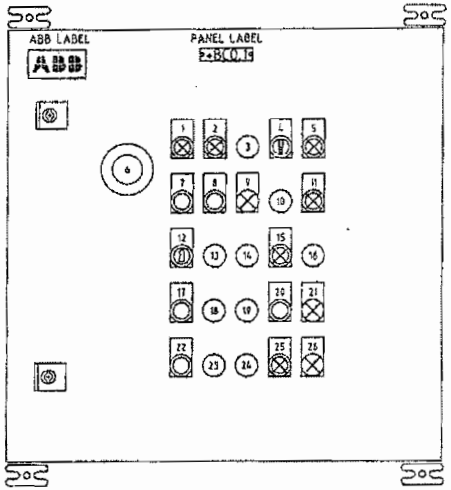

1 "CONTROL ON"
Illuminated pushbutton, Green

2 "ALARM / RESET"
Illuminated pushbutton, RED

3 "SPARE"

4 "BOOM HOIST AUTO-MANUAL"
Selector switch 2-pos maintained

5 "BOOM LATCH UP"
Illuminated pushbutton, green

6 "EMERGENCY STOP"
Pushbutton, Mushroom, Latched, Red

7 "CONTROL OFF"
Pushbutton, Black

8 "LAMPTEST"
Pushbutton, Black

9 "TROLLEY PARK POSITION"
Indication light, green

10 "SPARE"

11 "BOOM LATCH DOWN"
Illuminated pushbutton, green

12 "EMERGENCY DRIVE SELECTED"
Selector switch 2-pos maintained, key removable left

13 "SPARE"

14 "SPARE"

15 "BOOM RAISE"
Illuminated pushbutton, green

16 "SPARE"

17 "EMERGENCY DRIVE UP"
Pushbutton, Black

18 "SPARE"

19 "SPARE"

20 "BOOM STOP"
Pushbutton, Red

21 "BOOM LATCHED"
Indication light, yellow

22 "EMERGENCY DRIVE DOWN"
Pushbutton, Black

23 "SPARE"

24 "SPARE"

25 "BOOM LOWER"
Illuminated pushbutton, green

26 "BOOM HORIZONTAL"
Indication light, green

Port of Miami

MIAMI-DADE COUNTY
Delivering Excellence Every Day

Shaw Shaw GBB, LLC

GBB

BOOM
OPERATOR STATION
CONSOLE ARRANGEMENT

Drawn By:	Date:		
Checked By:	Date:		
Scale:	Job No. 3331	Drawing No. RFP-11	REV. A

1.6 +LSO.1, Dock Level Control Station

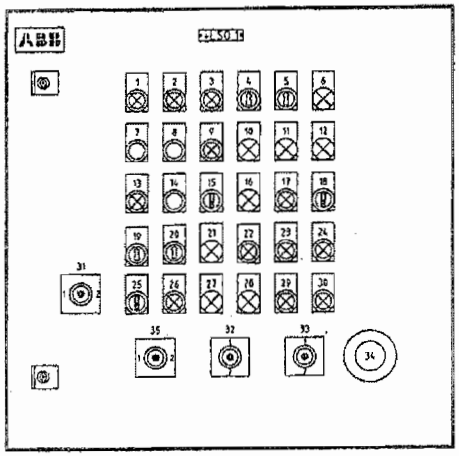

1 "CONTROL ON"
Illuminated pushbutton, Green

2 "ALARM/RESET"
Illuminated pushbutton, Red

3 "SPARE"
Illuminated pushbutton, Green

4 "SPREADER DOWN BYPASS, NORMAL - BYPASS"
Selector Switch 2-pos, key/maintained/removable left

5 "RESET SNAG FAULT"
Selector Switch 2-pos, key/spring return

6 "SNAG / OVERLOAD"
Indication light red

7 "CONTROL OFF"
Pushbutton Red

8 "LAMP TEST"
Pushbutton Black

9 "SPREADER HYD PUMP START/STOP"
Illuminated pushbutton, Green

10 "SPREADER TELESCOPE LENGTH 20 FT"
Indication Light, Blue

11 "SPREADER TELESCOPE LENGTH 40 FT"
Indication Light, Blue

12 "SPREADER TELESCOPE LENGTH 45 FT"
Indication Light, Blue

13 "WHEEL BRAKE DISENGAGED"
Illuminated pushbutton, Green

14 "WHEEL BRAKE ENGAGE"
Pushbutton, Black

15 "HEADBLOCK BYPASS NORMAL-BYPASS"
Selector Switch 2-pos, maintained

16 "CRANE STOWED"
Indication light red

17 "CENTER HOUSE UP/DOWN"
Illuminated pushbutton, Blue

18 "SPARE"
Selector Switch 3-pos, spring return

19 "SLACK CABLE, 0 - RESET"
Selector Switch 2-pos, key/spring return/removable left

20 "GANTRY MAINTENANCE MODE"
Selector Switch 2-pos, maintained

21 "SPREADER LANDED"
Indication Light,Yellow

22 "HIGH WIND WARING/BYPASS"
Illuminated pushbutton,Yellow

23 "WS FLIPPER LEFT ENABLE"
Illuminated pushbutton, Blue

24 "WS FLIPPER RIGHT ENABLE"
Illuminated pushbutton, Blue

25 "SPREADER TELESCOPE EXTEND-RETRACT"
Selector switch; 3-pos, Spring return

26 "FLOODLIGHTS ON/OFF"
Illuminated pushbutton, Green

27 "SPREADER TWISTLOCKS UNLOCK"
Indication Light,Green

28 "SPREADER TWISTLOCKS LOCK"
Indication Light,Red

29 "LS FLIPPER LEFT ENABLE"
Illuminated pushbutton, Blue

30 "LS FLIPPER RIGHT ENABLE"
Illuminated pushbutton, Blue

31 "TWISTLOCKS LOCK - 0 - UNLOCK"
Joystick, 2-dir, return to center

32 "FLIPPERS UP – 0 - DOWN"
Joystick, 2-dir, return to center

Port of Miami

MIAMI-DADE COUNTY
Delivering Excellence Every Day

Shaw • Shaw GBB, LLC™

DOCK LEVEL
CONTROL STATION
CONSOLE ARRANGEMENT

Drawn By:	Date:		
Checked By:	Date:		
Scale:	Job No. 3331	Drawing No. RFP-12	REV. A

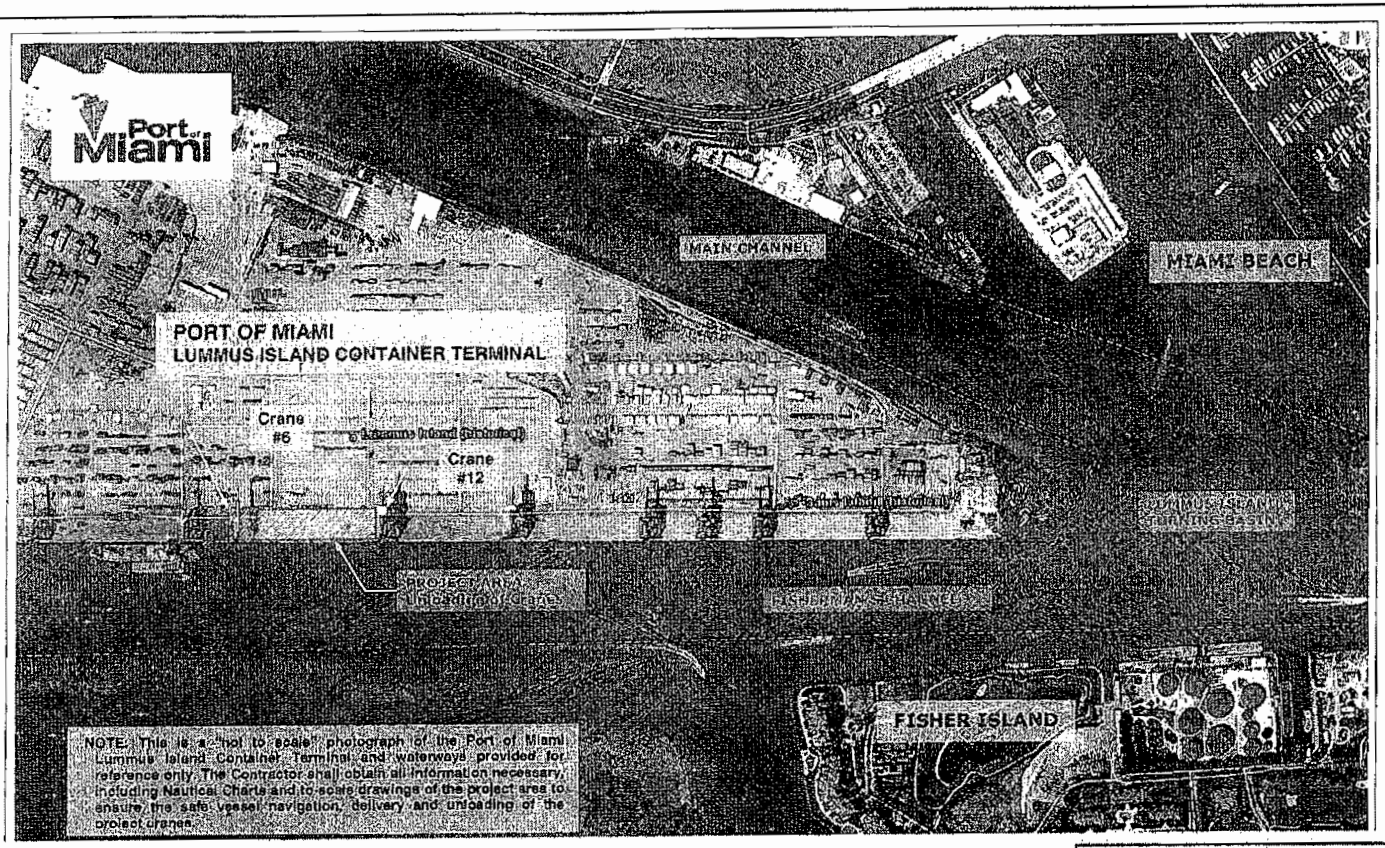

Port of Miami

MIAMI-DADE COUNTY Delivering Excellence Every Day

Shaw · GBB · Shaw GBB, LLC™

MIAMI HARBOR PHOTO

Drawn By:	Date:		
Checked By:	Date:		
Scale:	Job No. 3331	Drawing No. RFP-13	REV. A

225

Appendix B
Price Schedule

A. CRANE PRICE

The Contractor shall complete all work to design, fabricate, erect, paint, test, commission, transport, deliver to the Port of Miami, install, re-commission, certify and make operational four (4) 65 Long Ton Capacity, Super-post-panamax, "H" Frame, Dockside, Rail-mounted Gantry Container Handling Cranes, in accordance with this Agreement.

ITEM NO.	QTY	UNIT	DESCRIPTION	UNIT PRICE	EXTENDED TOTAL
1	4	Ea.	Four (4) Cranes 65 Long Ton Capacity Super Post-Panamax Dockside Gantry Container Handling Crane with ABB Drives, Spreader, two (2) Cargo Beam and Seven (7) Spare Spreaders	$9,450,000.00	$37,800.000.00

B. OPTIONAL ITEMS

The following are prices for optional items the County may purchase, at its sole discretion, that conform to the specifications stipulated in Appendix A. The prices are fixed and firm for a period of 365 days after NTP.

PRICES FOR OPTIONAL ITEMS

OPTIONAL ITEM NO.	DESCRIPTION	UNIT PRICE
1	Twin-lift 65 LT 20/40/45/2-20 Telescopic Spreader – RAM	$198,068.00
2	Twin-lift 65 LT 20/40/45/2-20 Telescopic Spreader – ZPMC	$158,068.00
3	Separating Twin-lift 65 LT 20/40/45/2-20 Telescopic Spreader - RAM	$200,068.00
4	Separating Twin-lift 65 LT 20/40/45/2-20 Telescopic Spreader - ZPMC	$160,068.00
5	Lightweight Twin-lift 50 LT 20/40/45/2-20 Telescopic Spreader for POM Cranes 4-10 - RAM	$197,068.00

Appendix B
Price Schedule

OPTIONAL ITEM NO.	DESCRIPTION	UNIT PRICE
6	Lightweight Twin-lift 50 LT 20/40/45/2-20 Telescopic Spreader for POM Cranes 4-10 - ZPMC	$157,068.00
7	Separating Lightweight Twin-lift 50 LT 20/40/45/2-20 Telescopic Spreader for POM Cranes 4-10 - RAM	$198,068.00
8	Separating Lightweight Twin-lift 50 LT 20/40/45/2-20 Telescopic Spreader for POM Cranes 4-10 - ZPMC	$158,068.00

C. CONTINGENCY ALLOWANCE

The Contingency Allowance is established to allow the County, at its sole discretion, the option to order Optional Items, equipment, spare parts, components, and/or related services in relation to the Work provided under this Agreement. This Contingency amount is not a promise of work, nor is the County required to order any such Optional or other items.

OPTIONAL ITEM NO.	DESCRIPTION	AMOUNT
9	Contingency Allowance	$1,500,000.00

Appendix C
Performance and Payment Warranty Bond - (CASH)

PERFORMANCE AND PAYMENT BOND
(CASH)

KNOW ALL MEN BY THESE PRESENTS, that hereinafter called the Contractor, is held and firmly bound unto Miami-Dade County, a political subdivision of the State of Florida, in the penal sum of ($_____), which sum is deposited by the Contractor in cash with the Finance Director of Dade County for:

(1) The faithful performance of a certain written agreement dated _____, 20 __, given by the Contractor to Miami-Dade County for the construction of _____

_____

_____

a copy of which agreement **(containing provisions for a Performance and Payment Bond)** is attached and by this reference made a part hereof, and

(2) To pay promptly all persons supplying the Contractor labor, material and supplies, used directly or indirectly by the Contractor, or Subcontractor, in the prosecution of the work provided for in said agreement. The provisions of Florida Statutes 255.05 are incorporated herein **(see Article 12, General Specifications "Contract Security").**

The areas and nature of the work covered by the Maintenance Performance and Payment Bond shall be as described in detail in the Special Provisions of these Contract Documents.

NOW THEREFORE, the conditions of the obligation are such that, if the Contractor shall in all respects comply with the maintenance terms and conditions of said Contract Document, for the period of time therein specified, including any extension or adjustments thereto mutually agreed upon, and shall in every respect fulfill his obligations thereunder, this obligation shall be void and the sum deposited shall

be returned without interest to the Contractor by the Finance Director; otherwise, the same shall remain in full force and virtue. The Contractor agrees that said County shall have the right to perform maintenance work, or pursuant to public advertisement and receipt and acceptance of bids, cause the said maintenance work to be performed in case the Contractor should fail or refuse so to do in accordance with the maintenance terms of said Contract, and in the event that said County should exercise and give effect to such rights, the Contractor shall be liable hereunder to pay to and indemnify the County upon completion of such maintenance the final cost to the County thereof, including, but not limited to, engineering, legal and contingent costs and expenses together with any damages, either direct or consequential, which the County may sustain on account of the failure of the Contractor to carry out and execute all the maintenance provisions of said Contract.

In the event suit is instituted against the Contractor upon this bond in which the Plaintiff shall be successful, there shall be assessed therein against the Contractor herein, in favor of the Plaintiff therein, reasonable counsel fees which the Contractor hereby expressly agrees to pay as part of the cost and expense of such suit.

Appendix C

Performance and Payment Warranty Bond - (CASH)

IN WITNESS WHEREOF the Contractor has executed under seal and delivered to Miami-Dade County these presents this _____ day of _____, 20 ___.

WHEN THE CONTRACTOR IS AN INDIVIDUAL:

Signed, sealed and delivered in the presence of:

_____ _____

_____ _____(SEAL)
(Witness) (Signature of Individual)

_____ _____
(Witness) (Printed Name of Individual)

WHEN THE CONTRACTOR IS A SOLE PROPRIETORSHIP OR OPERATES UNDER A TRADE NAME:

Signed, sealed and delivered in the presence of:

_____ _____

_____ _____
(Witness) (Name of Firm)

_____ _____(SEAL)
(Witness) (Signature of Individual)

WHEN THE CONTRACTOR IS A PARTNERSHIP:

Signed, sealed and delivered in the presence of:

_____ _____

_____ _____
(Witness) (Name of Firm) A Partnership

_____ By _____
(Witness) (Partner)

WHEN THE CONTRACTOR IS A CORPORATION:

ATTEST: _____

_____ _____
(Correct Name of Corporation)

_____ Secretary _____ By: _____

_____ President
(Corporate Seal)

Appendix C

Performance and Payment Warranty Bond - (CASH)

WHEN THE CONTRACTOR IS A JOINT VENTURE:

ATTEST: _____

_____ _____

_____ Secretary _____ _____

(Correct Name of Corporation)

By: _____

_____ President

as Joint Ventures (Contractor)

(Corporate Seal)

WHEN THE CONTRACTOR IS JOINT VENTURE:

ATTEST: _____

_____ _____

(Correct Name of Corporation)

_____ Secretary _____ By:

_____ President

as Joint Ventures (Contractor)

(Corporate Seal)

Appendix C

Performance and Payment Warranty Bond - (Surety)

PERFORMANCE AND PAYMENT BOND

(And will be modified to act as Warranty Bond)

(SURETY)

Revised 12/07/99

Appendix C

Performance and Payment Warranty Bond - (Surety)

KNOW ALL MEN BY THESE PRESENTS, that _____

_____ as principal, and ___ a corporation organized under the Laws of the State of _____, with its home office in the City of _____ as Surety, are held and firmly bound unto Miami-Dade County, Florida, acting by and through the **BOARD OF COUNTY COMMISSIONERS OF MIAMI-DADE COUNTY, FLORIDA,** and their successors in office, in the sum of ($_____) lawful money of the United States of America, for which payment well and truly to be made, the Principal and Surety respectively bind themselves, their successors, heirs and assigns, jointly and severally, firmly by these presents.

Signed, sealed and dated this ___ day of _____, 20__. **WHEREAS** the Principal and Dade County have entered into a written Contract for the construction complete of

_____ as evidenced by Contract, Plans and Specifications made a part thereof, entered into between the Principal and Miami-Dade County on the ___ day of _____, 20 _, including the posting of a Performance and Payment Bond.

To pay promptly all persons supplying the Contractor labor, materials and supplies, used directly or indirectly by the Contractor, or Subcontractor, in the prosecution of the work provided for in said agreement. The provisions of Florida Statutes 255.05 are incorporated herein **(See Article 12, General Specifications "Contract Security").**

Appendix C
Performance and Payment Warranty Bond - (Surety)

The areas and nature of the work covered by the Performance and Payment Bond shall be as described in detail in the Special Provisions of these Contract Documents.

NOW THEREFORE, the conditions of the obligation are such, that if the Principal shall in all respects comply with the maintenance terms and conditions of these Contract Documents, for the period of time therein specified, and shall in every respect fulfill his obligations thereunder, this obligation shall be void; otherwise, the same shall remain in full force and virtue. The Principal and the Surety jointly and severally agree that said County shall have the right to perform maintenance work, or pursuant to public advertisement and receipt and acceptance of bids, cause the said maintenance work to be performed in case the Principal should fail or refuse so to do in accordance with the maintenance terms of said Contract, and in the event that said County should exercise and give effect to such rights the Principal and the Surety shall be jointly and severally liable hereunder to pay to, and indemnify the County upon completion of such maintenance, the final total cost to the County thereof, including, but not limited to, engineering, legal an contingent costs and expenses, together with any damages, either direct or consequential, which the County may sustain on account of the failure of the Principal to carry out and execute all the maintenance provisions of said Contract.

In the event suit is instituted against the Principal and Surety upon this bond in which the Plaintiff shall be successful, there shall be assessed therein against the Principal and Surety herein, in favor of the Plaintiff, therein, reasonable Counsel fees which the Principal and Surety hereby expressly agree to pay as part of the cost and expense of such suit.

Appendix C
Performance and Payment Warranty Bond - (Surety)

IN WITNESS WHEREOF the said Principal and said Surety hereto have caused these presents to be executed this ___ day of _____, 20 __.

WHEN THE PRINCIPAL IS AN INDIVIDUAL:

Signed, sealed and delivered in the presence of:

_____ _____(SEAL)
(Witness) (Signature of Individual)

_____
(Witness) (Printed Name of Individual)

WHEN THE PRINCIPAL IS A SOLE PROPRIETORSHIP OR OPERATES UNDER A TRADE NAME:

Signed, sealed and delivered in the presence of:

_____
(Witness) (Name of Firm)

_____ _____(SEAL)
(Witness) (Signature of Individual)

WHEN THE PRINCIPAL IS A PARTNERSHIP:

Signed, sealed and delivered in the presence of:

_____
(Witness) (Name of Firm) A Partnership

_____ By:
(Witness) (Partner)

Appendix C
Performance and Payment Warranty Bond - (Surety)

WHEN THE PRINCIPAL IS A CORPORATION

ATTEST:

_____ (Correct Name of Corporation)

_____ Secretary _____By:

_____ President
(Corporate Seal)

(Name of Surety)

_____
Countersigned
Florida Resident Agent

(Address of Surety)

_____ By:
(Address of Agent)

_____
Telephone Number

NOTE: If both principal and surety are corporations, the respective corporate seals should be affixed and attached.

Appendix C
Performance and Payment Warranty Bond - (Surety)

WHEN THE PRINCIPAL IS A JOINT VENTURE:

ATTEST:

_____

(Correct Name of Corporation)

_____ Secretary _____By:

_____ President
as Joint Ventures (Principal)
(Corporate Seal)

ATTEST:

_____

_____ Secretary _____By:

_____ President
as Joint Ventures (Principal)
(Corporate Seal)

(Name of Surety)

_____
Countersigned
Florida Resident Agent

(Address of Surety)

_____ By:
(Address of Agent)

_____

Appendix C
Performance and Payment Warranty Bond - (Surety)

Telephone Number

NOTE: If both principal and surety are corporations, the respective corporate seals should be affixed and attached:

(Correct Name of Corporation - Joint Venturer)

CERTIFICATE AS TO CORPORATE PRINCIPAL

I, _____, certify that I am the secretary of the corporation named as principal in the within bond; that _____, who signed the said bond on behalf of the principal, was then _____ of said corporation; that I know his signature, and his signature thereto is genuine; and that said bond was duly signed, sealed and attested for and in behalf of said corporation by authority of its governing body.

(Corporate Seal)

(Correct Name of Corporation - Joint Venturer)

CERTIFICATE AS TO CORPORATE PRINCIPAL

I, _____, certify that I am the secretary of the corporation named as principal in the within bond; that

_____, who signed the said bond on behalf of the principal, was then _____ of said corporation; that I know his signature, and his signature thereto is genuine; and that said bond was duly signed, sealed and attested for and in behalf of said corporation by authority of its governing body.

(Corporate Seal)

Appendix C
Performance and Payment Warranty Bond - (Surety)

CERTIFICATE AS TO CORPORATE PRINCIPAL

I, _____, certify that I am the secretary of the corporation named as principal in the within bond; that

_____ who signed the said bond on behalf of the

principal, was then _____ of said corporation; that I know his signature, and his signature thereto is genuine; and that said bond was duly signed, sealed and attested for and in behalf of said corporation by authority of its governing body.

By:_____ Secretary
(Corporate Seal)

STATE OF FLORIDA)
) SS
COUNTY OF MIAMI-DADE)

Before me, a Notary Public, duly commissioned, qualified and acting, personally appeared:

to me well known, who being by me first duly sworn upon oath says that he is the attorney-in-fact for the

_____ and that he has been authorized by

_____ to execute the foregoing bond on behalf of the Contractor named therein in favor of Miami-Dade County, Florida.

Subscribed and sworn to before me this ___ day of _____, A.D. 20

Appendix C
Performance and Payment Warranty Bond - (Surety)

Notary Public, State of Florida at Large

My Commission Expires

Appendix C
Sample Letter of Credit

(Name and Title – TYPED)

SAMPLE LETTER OF CREDIT

(To be replaced with actual LOC)

We hereby establish this Irrevocable Letter of Credit No_____ in favor of the aforesaid beneficiary _____ (Beneficiary) for drawings up to $_____ effective immediately. This Letter of Credit is available for payment at sight at our correspondent banking office, _____ (our Office) and expires with the close of banking business at our office on _____.

The term Beneficiary includes any successor by operation of law of the named beneficiary including, without limitation, any liquidator, rehabilitator, receiver, or conservator.

We hereby undertake to honor your sight draft(s) drawn on our office, within three banking days upon presentation of documents in _____, indicating our credit no. _____for all or any part of this credit if presented at our office, in person or by mail, specified in the first paragraph on or before the expiration date. Partial drawings under this Letter of Credit are permitted.

The sight draft(s) shall be accompanied by at least one of the following statements purportedly signed by the Director of the Miami-Dade Transit, or his designee, reading as follows:

1. The undersigned, Director _____, or designee, certifies that the amount demanded as per the attached draft is due to the County, and that _____has not fulfilled its performance obligations in the time and manner prescribed in the contract documents signed and dated on or about _____, 2009, and entered into by the _____, Beneficiary, and _____for the Contract or:

2. The undersigned, Director _____ or designee, certifies that the amount demanded as per the attached draft is claimed to be owed to a person or persons, or company, defined in ARTICLE 255.05(1) or 713.01, Florida Statutes, who furnished labor, services, or materials used directly or indirectly by _____in the prosecution of the work provided for in the contract documents signed and dated on or about _____, 2009, and entered into by the_____, Beneficiary, and _____for the Contract and that such claimant(s) allege(s) that _____has not fulfilled its performance obligations under the Contract, by not making payments to such claimant.

Except as expressly stated herein, this undertaking is not subject to any agreement, condition or qualification. Our obligation under this Letter of Credit is our individual obligation and is in no way contingent upon reimbursement with respect thereto.

Any changes in or under the Contract Documents, and compliance or noncompliance with any formalities connected with the contract of the changes does not affect our duty to honor drafts under this Letter of Credit.

This Letter of Credit is subject to and governed by the 1993 Revision of the Uniform Customs and Practice for Documentary Credits of the International Chamber of Commerce (Publication 500) and, to extent not inconsistent therewith the laws of the State of Florida, including the Uniform Commercial Code as in effect in the State of Florida. In the event of any conflict, the laws of the State of Florida will control.

If the credit expires during an interruption of business as described in Article 17 of said Publication 500, the Bank hereby specifically agrees to effect payment if this Credit is drawn against within sixty (60) days after the resumption of business.

Communications with respect to the Letter of Credit shall be addressed to us at our office, _____, specifically referring to the number of this Letter of Credit.

Signed by and on behalf of _____:

By: _____
(Signature)

_____
(Name and Title)

By: _____
(Signature)

_____
(Name and Title)

Corporate Seal

6.0 SECURITY REQUIREMENTS:

6.1 Contractor acknowledges and accepts full responsibility for compliance with all applicable laws, rules and regulations including but not limited to those of the U.S. Department of Homeland Security, United States Coast Guard (USCG), Florida Department of Law Enforcement (FDLE), Florida Statute 311.12, Miami-Dade County Code Chapter 28-A, Port of Miami (POM) Terminal Tariff No. 010, POM and Seaport Security directives as adopted or amended from time to time relating to Contractor's activities at the POM.

6.2 In order to maintain high levels of security at POM, Contractor must obtain a POM authorized photo identification card for all Contractor employees working in the Restricted Access Area (RAA) or delivering materials to any RAA of the Seaport. All management level staff, superintendents, and foremen will be required to obtain photo identification cards and will be subject to a FDLE fingerprint-based criminal background investigation. All mechanics, apprentices, laborers etc., will also be issued photo identification cards. Please refer to Attachment "A" "Seaport Security Credential Package" at the end of the section. Temporary or transient day laborers may be issued a One-Day pass for escorted work in a RAA as long as access does not exceed 5 times in 90 days.

6.3 The Contractor shall be responsible for requesting POM to issue identification cards to all employees who Contractor requests be authorized access to the RAA and shall be further responsible for the immediate reporting of all lost or stolen ID cards and the immediate return of the ID cards of all personnel transferred from Seaport assignment or terminated from the employment of the Contractor or upon final acceptance of the work or termination of this Contract/Project Order. Contractor will be responsible for fees associated with lost and unaccounted for cards as well as the fee (s) for fingerprinting and ID issuance.

6.4 All employees of the Contractor, Subcontractors, or Trade Contractors who must work within the RAAs at the POM shall required to obtain a POM photo identification cards as specified above, which must be worn at all times while within the RAA. Cards shall be worn on outer garments above the waist so as to be clearly visible in order to distinguish, on sight, employees assigned to a particular Contractor. Responsibility for supply, issuance, and control of photo identification cards shall be that of the Contractor. The Safety and Security Division of the POM shall provide the photo identification cards to the Contractor.

6.5 Workzone Authorization Letters will be issued to the Contractor authorizing vehicle entrance to the RAA through specified POM security gates for the term of any Project. These letters will be issued only for those vehicles (including vehicles belonging to the Subcontractor) that must have access to the site during the performance of the work. These permits will be issued only to company owned vehicles or to company leased vehicles (leased from a commercial leasing

company). Workzone Authorization Letters or permits to operate within the RAA will not be issued to privately owned or privately leased vehicles.

6.6 All vehicles operating within the RAA must be provided with the Automobile Liability Insurance required elsewhere in these General Conditions. Proof of such insurance shall be provided to the POM Safety and Security Division upon request.

6.7 Vehicles delivering materials to the site will also require a Workzone Authorization Letter at the appropriate security gate. Such vehicles shall not be permitted to operate within the RAA without a Workzone Authorization Letter.

6.8 The Contractor's personnel with a POM photo I.D. card shall not be allowed to operate a motor vehicle in the RAA without a POM Workzone Authorization Letter. The Contractor shall require such employee to have a current, valid, appropriate Florida driver's license. The privilege of a person to operate a motor vehicle on the RAA may be withdrawn by the Department in its sole discretion because of violation of POM safety and security procedures or loss of Florida driver's license.

6.9 The Contractor agrees that its personnel, vehicles, cargo, goods, and other personal property are subject to search when attempting to enter, leave or while in the RAA. It is further agreed that the POM has the right to prohibit any individual, agent, or employee of the Contractor or Subcontractor from entering the RAA, based upon facts which would lead a person of reasonable prudence to believe that such individual might be inclined to engage in theft, cargo tampering, vessel sabotage, or other unlawful activities, including repeated failure to comply with the U.S. Department of Homeland Security, USCG, FDLE, Florida Statute, 311.12 Miami-Dade County Code Chapter 28-A, POM and Seaport Security policies, rules and regulations. Any person denied access to the RAA or whose prior authorization has been revoked or suspended on such grounds shall be entitled to a review hearing before the Director or his/her authorized designee within a reasonable time. Prior to such hearing, the person denied access to the RAA shall be advised, in writing, of the reasons for such denial.

6.10 The Contractor acknowledges and understands that these provisions are for the protection of all users of the RAA and are intended to reduce the incidence of thefts, cargo tampering, vessel sabotage, and other unlawful activities at the Seaport and to maximize compliance with the U.S. Department of Homeland Security, USCG, FDLE, Florida Statute 311.12, Miami-Dade County Code Chapter 28-A, POM, and POM Security access control policies and procedures.

6.11 The Contractor understands and agrees that vehicle and equipment shall not be parked/stored in the RAA in areas not designated or authorized by POM nor in any manner contrary to any posted regulatory signs, traffic control devices, or pavement markings.

6.12 Prior to Substantial Completion or issuance of a Certificate of Occupancy of any facility that will permit access to the RAA via doors or gates, the Contractor shall

either (a) keep all such doors and/or gates locked at all times or (b) position an authorized seaport qualified security guard to monitor any door and/or gate that must remain open at the Contractor's expense. Keys to such doors and gates shall be limited and issued only to company employees with a current POM photo I.D. card. Door/gate keys shall be numbered and stamped "Do Not Duplicate." The Contractor shall keep a log of all keys issued and to whom. The log is subject to audit by the POM. Employees must have their assigned key in their possession at the time of audit. Failure to comply with these requirements may result in monetary fines, loss of access to the RAA, and/or termination of this Contract.

6.13 Notwithstanding the specific provisions of this Article, the POM shall have the right to add to, amend, or delete any requirements contained herein in order to meet reasonable security requirements of the U.S. Department of Homeland Security, USCG, FDLE, Florida Statute 311.12, Miami-Dade County Code Chapter 28-A, POM, and POM Security.

6.14 The Contractor shall ensure that all employees required to participate in such safety, security, and other training and instructional programs, as POM or appropriate Federal or state agencies may from time to time require.

6.15 Contractor agrees that it will include in all contracts and subcontracts with its POM subcontractors, service providers, and suppliers an obligation by such parties to comply with all security requirements applicable to their operations at the Seaport. The Contractor agrees that in addition to all remedies, penalties, and sanctions that may be imposed by the U.S. Department of Homeland Security, USCG, FDLE, Florida Statute 311.12, Miami-Dade County Code Chapter 28-A, POM, or POM Security upon Contractor's, subcontractors, suppliers, and their individual employees for a violation of applicable security provisions, Contractor shall be responsible to the POM for all such violations and shall indemnify and hold the POM harmless for all costs, fines and penalties arising there from, such costs to include reasonable attorneys' fees.

6.16 The employee(s) of the Contractor shall be considered to be at all times its employee(s), and not an employee(s) or agent(s) of the County or any of its departments. The Contractor shall provide competent employee(s) capable of performing the work as required. The County may require the Contractor to remove any employee it deems unacceptable.

6.17 The Contractor shall control its operations and the operations of its Subcontractors and suppliers so as not to compromise the seaport's security, interfere with seaport operations or with vessel, vehicular or pedestrian traffic, except as may be provided for in the Contract/Project Order Documents.

6.18 The Contract is expressly intended to provide for the maximum degree of safety to vessels, the general public, seaport personnel, equipment and associated facilities, and to the Contractor's personnel, equipment, and supplies, etc., but shall also provided for the minimum interference to the free and unobstructed movement of vehicles and/or personnel engaged in the day to day operation of the

Seaport and the general public. To this end the Contractor, its Subcontractors and suppliers shall observe all Seaport rules and regulations, all other operational limitations which may be imposed from time to time by the POM, and shall provide whatever markings, lighting and/or various types of barricades, or other measures which are required to properly identify Contractor personnel, equipment, vehicles, storage areas and any Contractor's work areas or conditions which may be hazardous to the uninterrupted operation of ships, seaport equipment, including, but not limited to, maintenance vehicles and fire rescue vehicles, other vehicles, or personnel or vehicles from any source operating on the Seaport.

6.19 When the Project Order requires the Contractor to work within the RAA, the Contractor shall coordinate its work with the POM Facility Security Officer (FSO) at least 48 hours prior to the commencement of such work. The Contractor shall not close an RAA until so authorized by the POM FSO or the POM Port Representative, and until all necessary temporary markings and associated lighting are in place, as specified hereinafter.

6.20 When the Project Order requires the Contractor to work within the RAA on an intermittent basis (intermittent opening and closing of the RAA), the Contractor shall maintain constant communications with the Port Representative and/or POM FSO; obey all instructions to vacate the RAA; obey all instructions to resume work in the RAA. Failure to maintain the specified communications or to obey instructions shall be cause for suspension of the Contractor's operations within the RAA until the satisfactory conditions are provided. Costs associated with such suspension will be borne by the Contractor.

6.21 When the Project Order requires the maintenance of vehicular traffic on an existing road, street, or highway during the Contractor's performance of work, the Contractor shall keep such road, street, or highway open to all traffic and shall provide such maintenance of traffic as may be required to accommodate traffic. The Contractor shall furnish, erect, and maintain barricades, warning signs, flaggers, and other traffic control devices (to protect the public and the work) in reasonable conformity with the Manual of Uniform Traffic Control Devices for Streets and Highways (MUTCD) published by the Florida Department of Transportation. When used during periods of darkness, such barricades, warning signs, and hazard marking shall be suitably illuminated.

6.22 When the Project Order requires closing on operations area of the Port or portion of such area, the Contractor shall furnish, erect, and maintain temporary markings and associated lighting.

6.23 The Contractor shall furnish, erect, and maintain markings and associated lighting of open trenches, excavations, temporary stockpiles, and its parked construction equipment that may be hazardous to the operation of emergency fire-rescue or maintenance vehicles on the seaport in reasonable conformance.

6.24 The Contractor shall furnish and erect all barricades, warnings signs, and markings for hazards prior to commencing work which requires such erection and shall maintain the barricades, warning signs, and markings for hazards until their dismantling is directed by the Port Representative or the POM Security Office.

6.25 Open-flame type lights are prohibited.

6.26 If the Contractor fails to maintain the markings, lighting and barricades as required above, the Owner shall cause such safety measures to be installed by others. The cost for such service by others in this regard shall be borne by the Contractor.

6.27 The Contractor's responsibility for Maintenance of Traffic shall begin on the day the Contractor starts work on the project, or on the effective date of the Notice to Proceed, whichever comes first.

Memorandum

MIAMI-DADE COUNTY

Date: June 21, 2011

To: Alina T. Hudak
County Manager

Thru: Miriam Singer, CPPO
Director
Department of Procurement Management

From: Andrew Zawoyski, CPPO
Contracting Officer
Chairperson, Evaluation/Selection Committee

Subject: Report of Evaluation/Selection Committee for RFP No. 750; Dockside Container Handling Cranes at Seaport

---

The County issued a solicitation to obtain proposals from qualified firms for the design, fabrication, erection, painting, transportation, installation, testing and commission of two (2) 65 Long Ton Capacity, Super-Post-Panamax, "H" Frame, Dockside, Rail-mounted Gantry Container Handling Cranes, with an option to obtain two additional similar cranes.

The Evaluation/Selection Committee has completed the evaluation of proposals submitted in response to the solicitation following the guidelines published in the solicitation.

Committee meeting dates: March 31, 2011, April 21, 2011, May 16, 2011 and June 2, 2011.

Verification of compliance with contract measures:
The Review Committee recommended a Small Business Enterprise (SBE) selection factor for this solicitation. Neither of the two proposers qualifies for the selection factor.

Verification of compliance with minimum qualification requirements:
The solicitation did not have any minimum qualification requirements.

Local Certified Service-Disabled Veteran's Business Enterprise Preference:
Veteran's Preference was considered in accordance with the applicable ordinance. None of the proposers qualified for the preference.

Summary of scores:

The preliminary scores are as follows:

Pre-Oral Presentations

Proposer	***Technical Score*** *(max. 325)*	***Price Score*** *(max.175)*	***Total Combined Score*** *(max.500)*	***Price/Cost Submitted***
1. Shanghai Zhenhua Heavy Industries, Co.	306	175	481	$19,900,000.00
2. Cargotec USA, Inc.	237	104	341	$26,650,000.00

The Evaluation/Selection Committee decided to hold oral presentations. Price proposals were reviewed subjectively in combination with the technical proposals.

The final scores are as follows:

Proposer	***Technical Score***	***Price Score***	***Total Combined Score***	***Price/Cost Submitted***
	(max. 325)	*(max.175)*	*(max.500)*	
1. Shanghai Zhenhua Heavy Industries, Co.	311	175	486	$19,900,000.00
2. Cargotec USA, Inc.	225	94	319	$26,650,000.00

Local Preference:
Local Preference was considered in accordance with applicable ordinance, but did not affect the outcome.

Other information:
The RFP included an option to purchase up to two additional cranes for up to a 365 day period from Notice to Proceed to the selected contractor. The Port of Miami is in the process of determining if there is sufficient funding available to purchase the additional two cranes at this time.

Negotiations:
The Evaluation/Selection Committee recommends that the County enter into negotiations with the highest ranked proposer, Shanghai Zhenhua Heavy Industries Co., Ltd. The following individuals will participate in the negotiations:

Andrew Zawoyski, Contracting Officer, DPM
Juan Kuryla, Deputy Director, Port of Miami
Dorian K. Valdes, P.E., Assistant Port Director, Port of Miami
Mark Baker, Director, South Florida Container Terminal

Technical support staff from the Seaport will be used as needed.

Consensus Statement: Upon completion of the ranking, a Consensus Statement from the Evaluation/Selection Committee was prepared as to the rationale for the recommendation to negotiate. This Statement is attached.

Copies of the score sheets are attached for each Evaluation/Selection Committee member, as well as a composite score sheet.

Approved

Alina T. Hudak
County Manager

6/27/11
Date

Not Approved

Alina T. Hudak
County Manager

Date

250

MIAMI-DADE COUNTY, FLORIDA
Department of Procurement Management

Evaluation/Selection Committee Results Memo

RFP No. 750: Dockside Container Gantry Cranes – Port of Miami

The Evaluation/Selection Committee was tasked with rating and ranking the proposals received in regard to the RFP for Dockside Container Gantry Cranes – Port of Miami. The Evaluation/Selection Committee scoring was conclusive. The Evaluation/Selection Committee recommends that the County enter into negotiations with Shanghai Zhenhua Heavy Industries Co., Ltd (ZPMC).

The Evaluation/Selection Committee unanimously agrees that the selected proposer is recommended for negotiations as a result of:

Superior proposal with requested requirements exceeding all areas of the evaluation criteria in:

- Overall past performance and experience in providing cranes;
- Compliance to the Technical Specifications/Design Configurations;
- Approach to providing cranes, compliance with safety factors, meeting schedules;
- Adherence to warranty requirements;
- Significantly better pricing.

Juan Kuryla – Deputy Director, Port of Miami

Dorian K. Valdes, P.E. – Assistant Port Director, Capital Development Division, Port of Miami

Mark Baker – Director, South Florida Container Terminal

Christopher Arocha – Vice President, Eller-ITO Stevedoring Co., LLC

Olga Espinosa-Anderson - Division Director 3, DSWM

RFP NO. 750

DOCKSIDE CONTAINER HANDLING CRANES AT THE SEAPORT

EVALUATION OF PROPOSALS - Post Orals

COMPOSITE

SELECTION CRITERIA / PROPOSERS	Maximum Points Per Member	Maximum Total Points (5 members)	Cargotec USA In.	Shanghai Zhenhua Heavy Industries Co., Ltd (ZPMC)	
Proposer's relevant experience, qualifications, and past performance in providing required Cranes	20	100	78	97	
Relevant experience and qualifications of key personnel, including key personnel of subcontractors, that will be assigned to this project, and experience and qualifications of subcontractors	25	125	88	118	
Proposed Cranes and Proposer's approach to providing the services requested in this Solicitation	20	100	59	96	
Total Technical Points *(Total of technical rows)*	65	325	225	311	
Selection Factor *(10% of the Total Technical Points on the Technical Portion)*	10%		0	0	
Veteran's Preference (5% of the Total Technical Points on the Technical Portion)	5%		0	0	
Proposer's Proposed Price	35	175	94	175	
TOTAL POINTS (Technical + Price)	100	500	319	486	
RANKING					

SIGNATURE:

Chairperson

Fred Simmons Jr.

Reviewed By

PRINT NAME: Andrew Zawacki

FRED SIMMONS JR.

DATE: 6-3-11

6-3-11

RFP NO. 750

DOCKSIDE CONTAINER HANDLING CRANES AT THE SEAPORT

EVALUATION OF PROPOSALS - Post Orals

JUAN KURYLA (SEAPORT)

SELECTION CRITERIA / PROPOSERS	Maximum Points	Cargotec USA In.	Shanghai Zhenhua Heavy Industries Co., Ltd (ZPMC)
Proposer's relevant experience, qualifications, and past performance in providing required Cranes	20	18	20
Relevant experience and qualifications of key personnel, including key personnel of subcontractors, that will be assigned to this project, and experience and qualifications of subcontractors	25	19	23
Proposed Cranes and Proposer's approach to providing the services requested in this Solicitation	20	16	19
Total Technical Points *(Total of technical rows above)*	65	53	62
Selection Factor (10% of the Total Technical Points on the Technical Portion)	10%		
Veteran's Preference (5% of the Total Technical Points on the Technical Portion)	5%		
Proposer's Proposed Price	35	20	35
TOTAL POINTS (Technical + Price)	100	73	97

SIGNATURE

6/2/11

DATE

6/2/2011

RFP NO. 750

DOCKSIDE CONTAINER HANDLING CRANES AT THE SEAPORT

EVALUATION OF PROPOSALS - Post Orals

DORIAN K. VALDES (SEAPORT)

SELECTION CRITERIA / PROPOSERS	Maximum Points	Cargotec USA In.	Shanghai Zhenhua Heavy Industries Co., Ltd (ZPMC)
Proposer's relevant experience, qualifications, and past performance in providing required Cranes	20	17	19
Relevant experience and qualifications of key personnel, including key personnel of subcontractors, that will be assigned to this project, and experience and qualifications of subcontractors	25	20	24
Proposed Cranes and Proposer's approach to providing the services requested in this Solicitation	20	9	19
Total Technical Points *(Total of technical rows above)*	65	46	62
Selection Factor (10% of the Total Technical Points on the Technical Portion)	10%		
Veteran's Preference (5% of the Total Technical Points on the Technical Portion)	5%		
Proposer's Proposed Price	35	19	35
TOTAL POINTS ***(Technical + Price)***	100	65	97

Dorian K. Valdes

SIGNATURE

6/2/2011

DATE

854

RFP NO. 750

DOCKSIDE CONTAINER HANDLING CRANES AT THE SEAPORT

EVALUATION OF PROPOSALS - Post Orals

MARK BAKER, South Florida Container Terminal (SFCT)

SELECTION CRITERIA / PROPOSERS	Maximum Points	Cargotec USA In.	Shanghai Zhenhua Heavy Industries Co., Ltd (ZPMC)
Proposer's relevant experience, qualifications, and past performance in providing required Cranes	20	15	20
Relevant experience and qualifications of key personnel, including key personnel of subcontractors, that will be assigned to this project, and experience and qualifications of subcontractors	25	20	25
Proposed Cranes and Proposer's approach to providing the services requested in this Solicitation	20	10	20
Total Technical Points *(Total of technical rows above)*	65	45	65
Selection Factor (10% of the Total Technical Points on the Technical Portion)	10%		
Veteran's Preference (5% of the Total Technical Points on the Technical Portion)	5%		
Proposer's Proposed Price	35	20	35
TOTAL POINTS (Technical + Price)	100	65	100

SIGNATURE

6-2-2011

DATE

955

RFP NO. 750

DOCKSIDE CONTAINER HANDLING CRANES AT THE SEAPORT

EVALUATION OF PROPOSALS - Post Orals

CHRISTOPHER C. AROCHA, Eller-ITO Stevedoring Co., LLC

SELECTION CRITERIA / PROPOSERS	Maximum Points	Cargotec USA In.	Shanghai Zhenhua Heavy Industries Co., Ltd (ZPMC)
Proposer's relevant experience, qualifications, and past performance in providing required Cranes	20	18	20
Relevant experience and qualifications of key personnel, including key personnel of subcontractors, that will be assigned to this project, and experience and qualifications of subcontractors	25	19	22
Proposed Cranes and Proposer's approach to providing the services requested in this Solicitation	20	15	20
Total Technical Points *(Total of technical rows above)*	65	52	62
Selection Factor (10% of the Total Technical Points on the Technical Portion)	10%		
Veteran's Preference (5% of the Total Technical Points on the Technical Portion)	5%		
Proposer's Proposed Price	35	15	35
TOTAL POINTS (Technical + Price)	100	67	97

SIGNATURE

6/2/11

DATE

356

RFP NO. 750

DOCKSIDE CONTAINER HANDLING CRANES AT THE SEAPORT

EVALUATION OF PROPOSALS - Post Orals

OLGA ESPINOSA-ANDERSON (SWM)

SELECTION CRITERIA / PROPOSERS	Maximum Points	Cargotec USA In.	Shanghai Zhenhua Heavy Industries Co., Ltd (ZPMC)
Proposer's relevant experience, quallfications, and past performance in providing required Cranes	20	10	18
Relevant experience and qualifications of key personnel, including key personnel of subcontractors, that will be assigned to this project, and experience and qualifications of subcontractors	25	10	24
Proposed Cranes and Proposer's approach to providing the services requested in this Solicitation	20	9	18
Total Technical Points *(Total of technical rows above)*	65	29	60
Selection Factor (10% of the Total Technical Points on the Technical Portion)	10%		
Veteran's Preference (5% of the Total Technical Points on the Technical Portion)	5%		
Proposer's Proposed Price	35	20	35
TOTAL POINTS (Technical + Price)	100	49	95

SIGNATURE

6/2/11

DATE

6/2/2011

RFP NO. 750

DOCKSIDE CONTAINER HANDLING CRANES AT THE SEAPORT

EVALUATION OF PROPOSALS

COMPOSITE

SELECTION CRITERIA / PROPOSERS	Maximum Points Per Member	Maximum Total Points (5 members)	Cargotec USA In.	Shanghai Zhenhua Heavy Industries Co., Ltd (ZPMC)	
Proposer's relevant experience, qualifications, and past performance in providing required Cranes	20	100	78	95	
Relevant experience and qualifications of key personnel, including key personnel of subcontractors, that will be assigned to this project, and experience and qualifications of subcontractors	25	125	89	118	
Proposed Cranes and Proposer's approach to providing the services requested in this Solicitation	20	100	70	93	
Total Technical Points *(Total of technical rows)*	65	325	237	306	
Selection Factor *(10% of the Total Technical Points on the Technical Portion)*	10%		0	0	
Veteran's Preference (5% of the Total Technical Points on the Technical Portion)	5%		0	0	
Proposer's Proposed Price	30	175	104	175	
TOTAL POINTS (Technical + Price)	100	500	341	481	
RANKING					

SIGNATURE:

Chairperson

Reviewed By

PRINT NAME: Andrew Brady

Fred Simmons Jr.

DATE: 4/22/11

5/7/11

4/22/2011

RFP NO. 750

DOCKSIDE CONTAINER HANDLING CRANES AT THE SEAPORT

EVALUATION OF PROPOSALS

JUAN KURYLA (SEAPORT)

SELECTION ↓ / PROPOSERS CRITERIA →	Maximum Points	Cargotec USA In.	Shanghai Zhenhua Heavy Industries Co., Ltd (ZPMC)
Proposer's relevant experience, qualifications, and past performance in providing required Cranes	20	18	20
Relevant experience and qualifications of key personnel, including key personnel of subcontractors, that will be assigned to this project, and experience and qualifications of subcontractors	25	19	23
Proposed Cranes and Proposer's approach to providing the services requested in this Solicitation	20	16	19
Total Technical Points *(Total of technical rows above)*	65	53	63
Selection Factor (10% of the Total Technical Points on the Technical Portion)	10%	0	0
Veteran's Preference (5% of the Total Technical Points on the Technical Portion)	5%	0	0
Proposer's Proposed Price	35	[illegible]	[illegible]
TOTAL POINTS *(Technical + Price)*	100	73	96

bse

SIGNATURE

4/21/11

DATE

RFP NO. 750

DOCKSIDE CONTAINER HANDLING CRANES AT THE SEAPORT

EVALUATION OF PROPOSALS

DORIAN K. VALDES (SEAPORT)

SELECTION ↓ / PROPOSERS CRITERIA →	Maximum Points	Cargotec USA In.	Shanghai Zhenhua Heavy Industries Co., Ltd (ZPMC)
Proposer's relevant experience, qualifications, and past performance in providing required Cranes	20	17	19
Relevant experience and qualifications of key personnel, including key personnel of subcontractors, that will be assigned to this project, and experience and qualifications of subcontractors	25	20	24
Proposed Cranes and Proposer's approach to providing the services requested in this Solicitation	20	9	19
Total Technical Points *(Total of technical rows above)*	65	46	62
Selection Factor (10% of the Total Technical Points on the Technical Portion)	10%		
Veteran's Preference (5% of the Total Technical Points on the Technical Portion)	5%		
Proposer's Proposed Price	35	19	35
TOTAL POINTS ***(Technical + Price)***	100	65	97

2nd

Dorian K. Valdes

SIGNATURE

4/21/2011

DATE

By April 21st

RFP NO. 750

DOCKSIDE CONTAINER HANDLING CRANES AT THE SEAPORT

EVALUATION OF PROPOSALS

MARK BAKER, South Florida Container Terminal (SFCT)

SELECTION ↓ PROPOSERS CRITERIA →	Maximum Points	Cargotec USA In.	Shanghai Zhenhua Heavy Industries Co., Ltd (ZPMC)
Proposer's relevant experience, qualifications, and past performance in providing required Cranes	20	18	20
Relevant experience and qualifications of key personnel, including key personnel of subcontractors, that will be assigned to this project, and experience and qualifications of subcontractors	25	20	25
Proposed Cranes and Proposer's approach to providing the services requested in this Solicitation	20	10	17
Total Technical Points *(Total of technical rows above)*	65	48	62
Selection Factor (10% of the Total Technical Points on the Technical Portion)	10%	Ø	Ø
Veteran's Preference (5% of the Total Technical Points on the Technical Portion)	5%	Ø	Ø
Proposer's Proposed Price	35	25	35
TOTAL POINTS *(Technical + Price)*	100	73	97

[signature]
SIGNATURE

4-21-2011
DATE

3/31/2011

1 of 2

RFP NO. 750

DOCKSIDE CONTAINER HANDLING CRANES AT THE SEAPORT

EVALUATION OF PROPOSALS

CHRISTOPHER C. AROCHA, Eller-ITO Stevedoring Co., LLC

SELECTION ↓ PROPOSERS CRITERIA →	Maximum Points	Cargotec USA In.	Shanghai Zhenhua Heavy Industries Co., Ltd (ZPMC)
Proposer's relevant experience, qualifications, and past performance in providing required Cranes	20	15	18
Relevant experience and qualifications of key personnel, including key personnel of subcontractors, that will be assigned to this project, and experience and qualifications of subcontractors	25	20	23
Proposed Cranes and Proposer's approach to providing the services requested in this Solicitation	20	20	20
Total Technical Points *(Total of technical rows above)*	65	55	61
Selection Factor (10% of the Total Technical Points on the Technical Portion)	10%	0	0
Veteran's Preference (5% of the Total Technical Points on the Technical Portion)	5%	0	0
Proposer's Proposed Price	35	[illegible]	[illegible]
TOTAL POINTS (Technical + Price)	100	75	96

[signature]

SIGNATURE

4/21/11

DATE

3/31/2011

e9e

RFP NO. 750

DOCKSIDE CONTAINER HANDLING CRANES AT THE SEAPORT

EVALUATION OF PROPOSALS

OLGA ESPINOSA-ANDERSON (SWM)

SELECTION ↓ / PROPOSERS CRITERIA →	Maximum Points	Cargotec USA In.	Shanghai Zhenhua Heavy Industries Co., Ltd (ZPMC)
Proposer's relevant experience, qualifications, and past performance in providing required Cranes	20	10	18
Relevant experience and qualifications of key personnel, including key personnel of subcontractors, that will be assigned to this project, and experience and qualifications of subcontractors	25	10	23
Proposed Cranes and Proposer's approach to providing the services requested in this Solicitation	20	15	18
Total Technical Points *(Total of technical rows above)*	65		
Selection Factor (10% of the Total Technical Points on the Technical Portion)	10%		
Veteran's Preference (5% of the Total Technical Points on the Technical Portion)	5%		
Proposer's Proposed Price	35	20	35
TOTAL POINTS (Technical + Price)	100		

Olga Espinosa-Anderson

SIGNATURE

4/21/11

DATE

293

223744

EVALUATION/SELECTION COMMITTEE
SEAPORT DEPARTMENT
FOR DOCKSIDE CONTAINER HANDLING CRANES

RFP NO. 750

RFA/RFP/RFQ
CONSULTANT SELECTION COMMITTEE
ROUTING SLIP

Transmitted To:	Name	Approved	Hold
Director, Small Business Development	Penelope Townsley		
Assistant County Manager	Ysela Llort		
County Manager	George M. Burgess		

Please indicate your preference for approval or hold by placing your initials in the appropriate space.

After reviewing the item and indicating your preference, please return this form and all attached documents to Joan Gordon, Small Business Development, Stephen P. Clark Center, 111 N.W. 1 Street, 19th Floor, Miami, FL 33128.

Memorandum

MIAMI-DADE COUNTY

Date: March 17, 2011

To: Those Listed Below

From: George M. Burgess
County Manager

Subject: Request for Evaluation/Selection Committee for the Seaport Department for Dockside Container Handling Cranes – RFP No. 750

In accordance with Administrative Order 3-34, I am hereby appointing those listed below as the Selection Committee for the Seaport Department for Dockside Container Handling Cranes – RFP No. 750:

Selection Committee
Andrew Zawoyski, DPM, Non-Voting Chairperson
Juan Kuryla, Seaport
Dorian K. Valdes, Seaport
Mark Baker, South Florida Container Terminal (SFCT)
Christopher C. Arocha, Eller-ITO Stevedoring Co., LLC
Olga Espinosa-Anderson, SWM
Mercedes Sosa, MDT (Alternate)

Technical Advisor
Aguedo E. (Ed) Bello, Port of Miami Crane Management, Inc.

The Selection Committee will meet to review written or printed material regarding the qualifications of each of the certified firms as it relates to the requirements defined in the advertised document. If required, the Selection Committee will select several candidate firms meeting the published criteria, to make oral presentations at a properly noticed public hearing to the full Selection Committee.

The Selection Committee shall be responsible for evaluating, rating and ranking the proposals by each Committee member, based on the criteria and procedure contained in the advertised document. The Evaluation/Selection Committee will first evaluate and rank responsive proposals on the Technical (Quality) criteria. If responsive proposers are invited to make oral presentations, the Committee may re-rate and re-rank the proposals based upon the written documents combined with the oral presentation. You may utilize staff of the issuing department and the using agency to conduct a preliminary review of the proposals for responsiveness to the technical requirements. All requests for specific determinations shall be made in writing to the County Attorney's Office.

You are directed to assist me in the selection process considering the factors delineated in the advertised document. These factors may include methodology and management approach, qualifications and experience of principals and staff, financial stability, proposer's past performance of similar scope and size, proposer's detailed plans to meet the objectives of each task, activity, etc., pursuant to any schedule, proposer's previous County experience, history and experience of the firm or individual(s), understanding of the project and the County's objectives, responsiveness to the established requirements, and Cost/Revenue (normally separate and sealed). When the document requires the proposer to provide cost/revenue in a separate sealed envelope, cost/revenue will be considered separately and after the other criteria have been evaluated.

If you are unable to participate in the Selection process, contact this office through Small Business Development (SBD) by memorandum documenting the reason why you cannot participate. Only in cases of **dire** urgency may you be excused from participation.

The alternate committee member will serve only in the event of an approved substitution. No substitution of committee members shall be allowed after the first official meeting of the committee. The Department of Procurement Management's (DPM) RFP Unit may substitute the chairperson to ensure the appropriate level of staffing expertise as deemed necessary to accommodate the needs of this solicitation.

Following the oral presentation, or upon completion of the review process, the Committee shall prepare and submit a memorandum to include a narrative of the evaluation and justification of the top recommended firm(s) based upon the reasoning and mathematical formula, if utilized, and attach supporting documentation and a summary sheet which MUST include the following information:

Name of firm(s)
Quality Rating Score
Price
Adjusted Score (if applicable)
Committee's Overall Ranking

This report should be submitted to me through SBD for review and consideration for further recommendation to the Board of County Commissioners.

As a matter of administrative policy and to maintain a fair and impartial process, all individuals appointed to the Selection Committee (including the Chairperson) and staff are instructed to refrain from discussing the solicitation with prospective lobbyists and/or consultants. Committee members are reminded that in accordance with the Cone of Silence Ordinance 98-106, they are prohibited from having any communication with potential respondents and/or their representatives. Violation of this policy could lead to termination.

All questions must be directed to the staff contact person(s) designated by the issuing department.

c: Miriam Singer, Director/DPM
Bill Johnson, Director/Seaport
Harpal S. Kapoor, Director/MDT
Kathleen Woods-Richardson, Director/SWM
Penelope Townsley, Director/SBD

Selection Committee
Andrew Zawoyski, DPM, Non-Voting Chairperson
Juan Kuryla, Seaport
Dorian K. Valdes, Seaport
Mark Baker, So. FL Container Terminal (SFCT)
Christopher C. Arocha, Eller-ITO Stevedoring Co., LLC
Olga Espinosa-Anderson, SWM
Mercedes Sosa, MDT (Alternate)

Technical Advisor
Aguedo E. (Ed) Bello, Port of Miami Crane Management, Inc.

EVALUATION/SELECTION COMMITTEE
SEAPORT DEPARTMENT
FOR DOCKSIDE CONTAINER HANDLING CRANES

RFP NO. 750

Committee Member/ Title	Department	Start Year With County	Ethnicity/ Gender	Education	Professional Licenses/ Certifications	Telephone #
Andrew Zawoyski Non-Voting Chairperson	DPM	---	---	---	---	(305) 375-5663
Juan Kuryla Deputy Director	Seaport	1989	Hispanic Male	Masters of Business Administration	PPM	(305) 347-4907
Dorian K. Valdes Assistant Port Director	Seaport	1987	Hispanic Male	Bachelor of Science, Chemical Engineering, Bachelor of Arts -- Chemistry	P.E.	(305) 347-4802
Mark Baker Director	SFCT	---	White Male	St. Peters College 1972-1973	None	(305) 347-3800
Christopher C. Arocha Vice President	Eller-ITO Stevedoring Co., LLC	---	Hispanic Male	Two Years College	Stevedore License	(305) 219-3741
Olga Espinosa-Anderson Division Director 3	SWM	1989	Hispanic Female	Master of Public Administration	Communications	(305) 514-6730
Mercedes Sosa Manager/Cost & Schedule Section (Alternate)	MDT	2000	Hispanic Female	B.S. in Engineering	General Contractor	(786) 469-5271
TECHNICAL ADVISOR						
Aguedo E. (Ed) Bello Chief Executive Officer	POM Crane Management, Inc.	---	Hispanic Male	Bachelor of Science, Mechanical Engineering	State of FL professional Engineer	(305) 381-6260 Ext 206