Memorandum

MIAMI-DADE COUNTY

Agenda Item No. 5G

Date: January 23, 2013

To: Honorable Chairwoman Rebeca Sosa
and Members, Board of County Commissioners

From: Carlos A. Gimenez
Mayor

Subject: Class I Permit Application by La Brisa, LLC to Excavate Wetlands for the Construction of a Residential Boat Notch and to Authorize the Acceptance of a Restrictive Covenant Running with the Land in Favor of Miami-Dade County at 3551 Main Highway in the City of Miami

---

Attached, please find for your consideration an application by La Brisa, LLC for a Class I permit and a Restrictive Covenant Running with the Land in Favor of Miami-Dade County. Also attached is the recommendation of the Department of Regulatory and Economic Resources and a proposed resolution approving the issuance of the Class I permit and accepting the restrictive covenant.

Jack Osterholt, Deputy Mayor

Memorandum

MIAMI-DADE COUNTY

Date: September 24, 2012

To: Carlos Gimenez
Mayor

From: Jack Osterholt, Deputy Mayor, Director
Department Regulatory and Economic Resources

Subject: Class I Permit Application by La Brisa, LLC to Excavate Wetlands for the Construction of a Residential Boat Notch and to Authorize the Acceptance of a Restrictive Covenant Running with the Land in Favor of Miami-Dade County at 3551 Main Highway in the City of Miami

---

Recommendation
I have reviewed the attached application for a Class I permit and the restrictive covenant proffered by La Brisa, LLC. Based upon the applicable evaluation factors set forth in Section 24-48.3 of the Code of Miami-Dade County (Code), Florida, I recommend that the Board of County Commissioners approve the issuance of a Class I permit and accept the restrictive covenant for the reasons set forth below.

Scope
The site is located in Coconut Grove at 3551 Main Highway, Miami, in Commissioner Suarez's District 7.

Fiscal Impact/Funding Source
Not applicable

Track Record/Monitor
The Coastal and Wetlands Resources Section Manager within the Department of Regulatory and Economic Resources, Lisa Spadafina, will be responsible for monitoring the terms of the proposed permit.

Background
This Class I permit application requests authorization to excavate 0.08 acres of halophytic (salt tolerant) wetlands for the expansion of a private residential boat notch and to release an existing covenant and accept a new restrictive covenant at 3551 Main Highway, Miami. The proposed project is required to be reviewed and approved by the Board at a public hearing because the scope of work is not specifically referenced in Section 24-48.2 of the Code as work that can be processed administratively with a short form application. Therefore, a standard form application, including a public hearing, is required.

The project site consists of a single family residence located on a corner lot bordered by Biscayne Bay to the east and a small canal along the north side. The property currently has one authorized boat slip area within a small boat notch located along the canal shoreline. The narrow width of the canal and the need to maintain navigational access limit the potential for mooring of additional vessels along the canal. Therefore, the applicant is proposing to excavate both upland and halophytic wetlands in order to expand the existing boat notch to facilitate additional mooring. Additional work associated with the permit application includes the construction of a new seawall along the perimeter of the expanded boat notch and the creation of a boat ramp within the boat notch for launching canoes and kayaks. Site diagrams are included in Attachment B.

Approximately 1.15 acres of high quality halophytic wetlands exist at the property. Although the 0.08 acre wetland area to be excavated for the boat notch expansion is connected to the larger high quality wetland system, it is surrounded on three sides by a coral rock wall that separates the uplands from the wetlands. This separation provides for only a narrow corridor that limits water flow and decreases the

overall health and productivity of the area. Department staff reviewed multiple alternatives, including the mooring of vessels along the existing seawall on the canal, the installation of mooring structures along the bay side, and alternate locations for the boat notch within the property. The current proposal has the least impact while maximizing the use of upland areas to avoid impacts to high quality wetlands.

Section 24-48.3 of the Code requires mitigation for permittable projects that result in adverse environmental impacts. The proposed construction of the boat notch will result in permanent impacts to 0.08 acres of halophytic wetlands. Mitigation for these impacts will be satisfied by converting approximately 0.04 acres of onsite upland areas into halophytic wetlands using onsite vegetation transplanted prior to excavation. The newly created halophytic wetlands will be directly connected to the high quality wetlands. Mitigation for wetland impacts that cannot be accommodated onsite will be met by the purchase of 0.05 credits from the Everglades Mitigation Bank, while mitigation required for water quality impacts during seawall construction will be met with a contribution to the Biscayne Bay Environmental Enhancement Trust Fund. Mitigation values are calculated using the Uniform Mitigation Assessment Method rule under Chapter 62-345 of the Florida Administrative Code to determine the amount of mitigation to offset adverse impacts to wetlands and other surface waters and to determine mitigation bank credits.

To protect the significant baybottom resources extending around the east end of the property, a previous Class I permit and restrictive covenant required that vessels be moored within the small canal. The proposed restrictive covenant will limit the mooring of vessels to the proposed boat notch and will supersede the existing restrictive covenant. In addition, to ensure the success of the proposed mitigation areas and the preservation of the previous wetlands mitigation at the site, the proposed restrictive covenant will designate the remaining halophytic wetlands onsite as mitigation areas. The restrictive covenant will also require that the mitigation areas be managed such that they are not disturbed or removed and shall remain free from invasive and exotic vegetation in perpetuity.

The project was evaluated for consistency with the Miami-Dade County Manatee Protection Plan (MDCMPP). The project site is located in an area designated by the MDCMPP as essential habitat for the West Indian Manatee. The applicant has developed a comprehensive manatee protection plan to deal with any potential adverse impacts to manatees during construction. Furthermore, the Class I permit will require that all standard construction permit conditions regarding manatees be followed during all in-water operations.

The proposed project has been designed in accordance with all relevant Miami-Dade County coastal construction criteria and is consistent with all other Miami-Dade County coastal protection provisions. Please find attached a Project Report which sets forth the reasons the proposed project is recommended for approval pursuant to the applicable evaluation factors set forth in Section 24-48.3 of the Code.

Attachments

Attachment A: Class I Permit Application
Attachment B: Owner/Agent Letter, Engineer Certification Letter, and Project Sketches
Attachment C: Zoning Memorandum
Attachment D: Names and Addresses of Owners of All Riparian or Wetland Property within Three Hundred (300) Feet of the Proposed Work
Attachment E: Proposed Restrictive Covenant Running with the Land in Favor of Miami-Dade County
Attachment F: Existing Restrictive Covenant Running with the Land in Favor of Miami-Dade County
Attachment G: Department of Regulatory and Economic Resources Project Report

MEMORANDUM

(Revised)

TO: Honorable Chairwoman Rebeca Sosa
and Members, Board of County Commissioners

DATE: January 23, 2013

FROM: R. A. Cuevas, Jr.
County Attorney

SUBJECT: Agenda Item No. 5(G)

Please note any items checked.

_____	**"3-Day Rule" for committees applicable if raised**
_____	**6 weeks required between first reading and public hearing**
_____	**4 weeks notification to municipal officials required prior to public hearing**
_____	**Decreases revenues or increases expenditures without balancing budget**
_____	**Budget required**
_____	**Statement of fiscal impact required**
_____	**Ordinance creating a new board requires detailed County Mayor's report for public hearing**
✓	
_____	**No committee review**
_____	**Applicable legislation requires more than a majority vote (i.e., 2/3's ____, 3/5's ____, unanimous _____) to approve**
_____	**Current information regarding funding source, index code and available balance, and available capacity (if debt is contemplated) required**

Approved _____ Mayor
Veto _____
Override _____

Agenda Item No. 5(G)
1-23-13

RESOLUTION NO. _____

RESOLUTION RELATING TO A CLASS I PERMIT APPLICATION BY LA BRISA, LLC TO EXCAVATE WETLANDS FOR THE CONSTRUCTION OF A RESIDENTIAL BOAT NOTCH AND TO AUTHORIZE THE ACCEPTANCE OF A RESTRICTIVE COVENANT RUNNING WITH THE LAND IN FAVOR OF MIAMI-DADE COUNTY AT 3551 MAIN HIGHWAY IN THE CITY OF MIAMI, MIAMI-DADE COUNTY, FLORIDA

WHEREAS, this Board desires to accomplish the purposes outlined in the accompanying memorandum, a copy of which is incorporated herein by reference,

NOW, THEREFORE, BE IT RESOLVED BY THE BOARD OF COUNTY COMMISSIONERS OF MIAMI-DADE COUNTY, FLORIDA, that this Board having considered all the applicable factors contained within Section 24-48.3 of the Code of Miami-Dade County, hereby approves the application by La Brisa, LLC for a Class I permit application to excavate wetlands for the construction of a residential boat notch and to authorize the acceptance of a Restrictive Covenant Running with the Land in Favor of Miami-Dade County at 3551 Main Highway in the City of Miami, Miami-Dade County, Florida, subject to the conditions set forth in the memorandum from the Miami-Dade County Department of Regulatory and Economic Resources, a copy of which is attached hereto and made a part hereof. The issuance of this approval does not relieve the applicant from obtaining all applicable Federal, State, and local permits.

The foregoing resolution was offered by Commissioner , who moved its adoption. The motion was seconded by Commissioner and upon being put to a vote, the vote was as follows:

Rebeca Sosa, Chairwoman
Lynda Bell, Vice Chair

Bruno A. Barreiro	Esteban L. Bovo, Jr.
Jose "Pepe" Diaz	Audrey M. Edmonson
Sally A. Heyman	Barbara J. Jordan
Jean Monestime	Dennis C. Moss
Sen. Javier D. Souto	Xavier L. Suarez
Juan C. Zapata	

The Chairperson thereupon declared the resolution duly passed and adopted this 23rd day of January, 2013. This resolution shall become effective ten (10) days after the date of its adoption unless vetoed by the Mayor, and if vetoed, shall become effective only upon an override by this Board.

MIAMI-DADE COUNTY, FLORIDA
BY ITS BOARD OF COUNTY COMMISSIONERS

HARVEY RUVIN, CLERK

Approved by County Attorney as to form and legal sufficiency.

By:_____
Deputy Clerk

Abbie Schwaderer-Raurell

Attachment A

Class I Permit Application

MIAMI-DADE COUNTY

Class I Permit Application

FOR DEPARTMENTAL USE ONLY

Date Received:

Application Number: 2011-CLI-PER-00074

Application Fee: $2,720.00

Application must be filled out in its entirety. Please indicate N/A for non-applicable fields.

1. Applicant Information:

Name: La Brisa, LLC

Address: 3551 Main Highway

Miami, Florida Zip Code: 33133

Phone #: 786-202-0995 Fax#:

Email: simon@estudiodecker.com

*This should be the applicant's information for contact purposes.

2. Applicant's Authorized Permit Agent:

Agent is allowed to process the application, furnish supplemental information relating to the application and bind the applicant to all requirements of the application.

Name: Kirk Lofgren, Managing Member, Ocean Consulting, LLC

Address: 340 Minorca Avenue, Suite 5

Miami, Florida Zip Code: 33134

Phone #: (305) 921-9344 Fax #: (305) 667-3254

Email: kirk@oceanconsultingfl.com

3. Location where proposed activity exists or will occur (latitude and longitude are only necessary for properties without address or folio #):

Folio #(s): 04-4121-000-0130 Latitude: Longitude:

Street Address: 3551 Main Highway Section: 21 Township: 54N Range: 41E

In City or Town: Miami Near City or Town:

Name of waterway at location of the activity: Residential Canal

4. Describe the proposed activity (check all that apply):

- ☐ Seawall
  - ☒ New/Replacement Seawall
  - ☐ Seawall Cap
  - ☐ Batter Piles
  - ☐ King Piles
  - ☐ Footer/Toe Wall
  - ☐ Riprap
- ☒ Dock(s)
  - ☐ Pier(s)
  - ☐ Viewing Platform
- ☐ Boatlift
  - ☐ Mooring Piles
  - ☐ Fender Piles
  - ☐ Davits
- ☒ Dredging
  - ☐ Maintenance
  - ☐ New
- ☐ Filling
- ☐ Mangrove Trimming
- ☒ Mangrove Removal

☐ Other:

Estimated project cost = $300,000.00

Are you seeking an after-the-fact approval (ATF)? ☐ Yes ☒ No If "Yes", describe the ATF work:

5. Proposed Use (check all that apply):

- ☐ Single Family
- ☐ Multi-Family
- ☒ Private
- ☐ Public
- ☐ Commercial
- ☐ Industrial
- ☐ Utility

6. If the proposed work relates to the mooring of vessels provide the following information (please also indicate if the applicant does not have a vessel):

Proposed Vessel Type (s): Cabin cruiser / Center Console

Vessel Make/Model (If known): 58' Trumpy / 20' Contender

Draft (s)(range in inches.): 3' / 2' Length (s)(range in feet.): 58' / 20'

Total Number of Slips: 2

7. List all permits or certifications that have been applied for or obtained for the above referenced work:

Issuing Agency	Type of Approval	Identification Number	Application Date	Approval Date

8. Contractor Information (If known):

Name: To Be Determined License # (County/State):

Address: Zip Code:

Phone #: Fax #: E-mail:

RECEIVED
JUN 28 2012
DERM Coastal Resources
Natural Resources Regulation & Division (NRRRD)
Section
Reston

9. IMPORTANT NOTICE TO APPLICANTS: The written consent of the property owner is required for all applications to be considered complete. Your application WILL NOT BE PROCESSED unless the Applicant **and** Owner Consent portion of the application is completed below. You have the obligation to apprise the Department of any changes to information provided in this application.

Application is hereby made for a Miami-Dade County Class I permit to authorize the activities described herein. I agree to or affirm the following:

- I possess the authority to authorize the proposed activities at the subject property, and
- I am familiar with the information, data and plans contained in this application, and
- To the best of my knowledge and belief, the information, data and plans submitted are true, complete and accurate, and
- I will provide any additional information, evidence or data necessary to provide reasonable assurance that the proposed project will comply with the applicable State and County water quality standards both during construction and after the project is completed, and
- I am authorizing the permit agent listed in Section 2 of this application to process the application, furnish supplemental information relating to this application and bind the applicant to all requirements of this application, and
- I agree to provide access and allow entry to the project site to inspectors and authorized representatives of Miami-Dade County for the purpose of making the preliminary analyses of the site and to monitor permitted activities and adherence to all permit conditions.

A. IF APPLICANT IS AN INDIVIDUAL

Signature of Applicant | Print Applicant's Name | Date

B. IF APPLICANT IS OTHER THAN AN INDIVIDUAL OR NATURAL PERSON
(Examples: Corporation, Partnership, Trust, LLC, LLP, etc.)

La Brisa, LLC	LLC	Florida
Print Name of Applicant (Enter the complete name as registered)	Type (Corp, LLC, LLP, etc.)	State of Registration/Incorporation

Under the penalty of perjury, I certify that I have the authority to sign this application on behalf of the Applicant, to bind the Applicant, and if so required to authorize the issuance of a bond on behalf of the Applicant. (If asked, you must provide proof of such authority to the Department). ***Please Note: If additional signatures are required, pursuant to your governing documents, operating agreements, or other applicable agreements or laws, you must attach additional signature pages. ***

[signature]	SIMON DECKER	OWNER	06-25-12
Signature of Authorized Representative	Print Authorized Representative's Name	Title	Date

C. IF APPLICANT IS A JOINT VENTURE Each party must sign below(If more than two members, list on attached page)

Print Name of Applicant (Enter the complete name as registered)	Type (Corp, LLC, LLP, etc.)	State of Registration/Incorporation
Print Name of Applicant (Enter the complete name as registered)	Type (Corp, LLC, LLP, etc.)	State of Registration/Incorporation

Under the penalty of perjury, I certify that I have the authority to sign this application on behalf of the Applicant, to bind the Applicant, and if so required to authorize the issuance of a bond on behalf of the Applicant. (If asked, you must provide proof of such authority to the Department). ***Please Note: If additional signatures are required, pursuant to your governing documents, operating agreements, or other applicable agreements or laws, you must attach additional signature pages. ***

Signature of Authorized Representative	Print Authorized Representative's Name	Title	Date
Signature of Authorized Representative	Print Authorized Representative's Name	Title	Date

10. WRITTEN CONSENT OF THE PROPERTY OWNER OF THE AREA OF THE PROPOSED WORK

I/We are the fee simple owner(s) of the real property located at 3551 Main Highway, Miami, Miami-Dade County, Florida, otherwise identified in the public records of Miami-Dade County as Folio No. 01-4121-000-0130. I am aware and familiar with the contents of this application for a Miami-Dade County Class I Permit to perform the work on or adjacent to the subject property, as described in Section 4 of this application. I possess the riparian rights to the area of the proposed work (if applicable) and hereby consent to the work identified in this Class I Permit application.

RECEIVED
JUN 28 2012
DERM Coastal Resources Section
Natural Resources Regulation & Restoration
Division (NRRRD)

A. IF THE OWNER(S) IS AN INDIVIDUAL

Signature of Owner	Print Owner's Name	Date
Signature of Owner	Print Owner's Name	Date

B. IF THE OWNER IS OTHER THAN AN INDIVIDUAL OR NATURAL PERSON
(Examples: Corporation, Partnership, Joint Venture, Trust, LLC, LLP, etc.)

La Brisa, LLC	LLC	Florida
Print Name of Owner (Enter the complete name as registered)	Type (Corp, LLC, LLP, etc.)	State of Registration/Incorporation

3551 Main Highway, Miami, Florida 33133
Address of Owner

Under the penalty of perjury, I certify that I have the authority to sign this application on behalf of the Owner, to bind the Owner, and if so required to authorize the issuance of a bond on behalf of the Owner. (If asked, you must provide proof of such authority to the Department). ***Please Note: If additional signatures are required, pursuant to your governing documents, operating agreements, or other applicable agreements or laws, you must attach additional signature pages. ***

Signature of Authorized Representative	Print Authorized Representative's Name	Title	Date
[signature]	SIMON DEKER	OWNER	06/25/12
Signature of Authorized Representative	Print Authorized Representative's Name	Title	Date

Attachment B

Owner/Agent Letter, Engineer Certification Letter, and Project Sketches

PERMIT APPLICANT / AUTHORIZED AGENT STATEMENT

June 25, 2012

Miami Dade County Department of Regulatory and Economic Resources
Class I Permitting Program
701 NW 1st Court
Miami, FL 33136

Re: Class I Standard Form Permit Application Number 2011-CLI-PER-00074

By the attached Class I Standard Form permit application with supporting documents, I, Kirk Lofgren, Managing Member, Ocean Consulting, LLC, am the applicant's authorized agent and hereby request permission to perform the work associated with Class I Permit Application 2011-CLI-PER-00074. I understand that a Miami-Dade County Class I Standard Form Permit is required to perform this work.

If approval is granted for the proposed work by the Board of County Commissioners, complete and detailed plans and calculations of the proposed work shall be prepared by an engineer registered/licensed in the State of Florida in accordance with the minimum requirements of Chapter 24 of the Code of Miami-Dade County, Florida. Said plans and calculations shall be subject to the review and approval of the Department of Regulatory and Economic Resources. The permit applicant will secure the services of an engineer registered/licensed in the State of Florida to conduct inspections throughout the construction period, and said engineer shall prepare all required drawings of record. In the event that the proposed work which is the subject of this Class I Permit application involves the cutting or trimming of a mangrove tree(s), a detailed plan of the proposed cutting or trimming shall be prepared by a licensed landscape architect and submitted to the Department for review and approval, and the permit applicant will secure the services of a licensed landscape architect to supervise the trimming or cutting.

Respectfully submitted,

Kirk Lofgren,
Managing Member, Ocean Consulting, LLC
Applicant's Authorized Agent

RECEIVED
JUN 27 2012
DERM Coastal Resources Section
Natural Resources Regulation & Restoration
Division (NRRRD)

ENGINEER LETTER OF CERTIFICATION

RECEIVED
JUL 02 2012
DERM Coastal Resources Section
Natural Resources Regulation & Restoration
Division (NRRRD)

June 29, 2012

Miami-Dade County Department of Regulatory and Economic Resources
Class I Permitting Program
701 NW 1st Court
Miami, Florida 33136

RE: Class I Permit Application Number 2011-CLI-PER-00074

Ladies and Gentlemen:

This letter will certify that I am an engineer registered/licensed in the State of Florida, qualified by education and experience in the area of construction, and that to the best of my knowledge and belief, the proposed work does not violate any laws of the State of Florida or any provision of the Code of Miami Dade County which may be applicable, that diligence and recognized standard practices of the engineering profession have been exercised in the engineer's design process for the proposed work, and in my opinion based upon my knowledge and belief, the following will not occur:

a. Harmful obstruction or undesirable alteration of the natural flow of the water within the area of the proposed work.

b. Harmful or increased erosion, shoaling of channels or stagnant areas of water. (Not applicable to class IV permits)

c. Material injury to adjacent property.

d. Adverse environmental impacts from changes in water quality or quantity. (Applicable to class IV permits only)

Further, I have been retained by the applicant to provide inspections throughout the construction period and to prepare a set of reproducible record prints of drawings showing changes made during the construction process based upon the marked-up prints, drawings, and other data furnished by the contractor to me.

Sincerely,

DENIS K. SOLANO
LICENSE
No. 56902
STATE OF FLORIDA
PROFESSIONAL ENGINEER

Mr. Denis Solano of Solano Structural Partnership, Inc.
P.E.

RECEIVED
JUL 0 2 2012
DERM Coastal Resources Section
Natural Resources Regulation & Restoration
Division (NRRRD)

DECKER BOAT NOTCH PROJECT

SHEET INDEX

G-1	LOCATION & EXISTING CONDITIONS
S-1	GENERAL NOTES
S-2	DEMOLITION SECTION VIEWS
S-3	MANGROVE TRANSPLANT PLAN
S-3A	MITIGATION AREAS - POST-CONSTRUCTION
S-4	EXCAVATED MATERIAL DISPOSAL PLAN
S-5	NEW BULKHEAD PLAN
S-6	NEW BULKHEAD SECTION & DETAILS
S-7	NEW BULKHEAD CONNECTION DETAILS
S-8	NEW OVER LAND WALKWAYS PLAN
S-9	NEW OVER LAND WALKWAYS SECTIONS
S-10	PROPOSED SLIP LAYOUT & LAUNCH RAMP

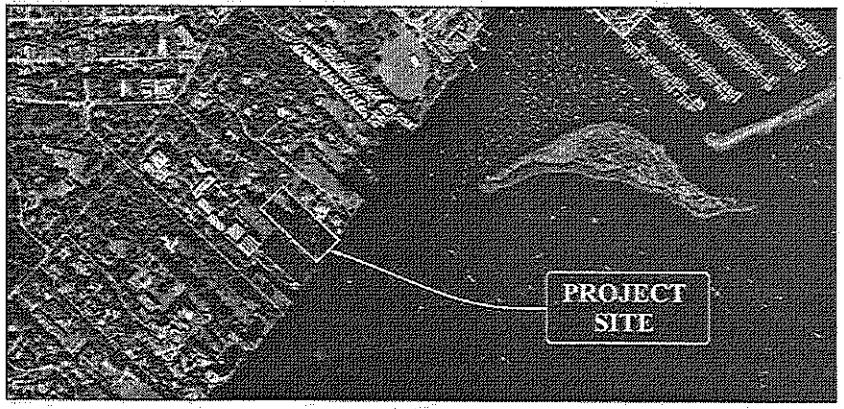

KEY MAP
SCALE: NTS

LOCATION:
3551 MAIN HIGHWAY
MIAMI, FLORIDA 33133

LAT/LONG:
25 DEG 43'21.73"N / 80 DEG 14'34.57"W

LEGAL DESCRIPTION:
21 54 41 BEG SE COR OF NE1/4 OF SW1/4 N ALG E/L OF NE1/4 OF SW1/4 TO INTER WITH SELY/L OF MAIN HWY & POB NELY ALG SELY/L OF INGRAHAM HWY TO ITS INTER WITH ELY/L OF

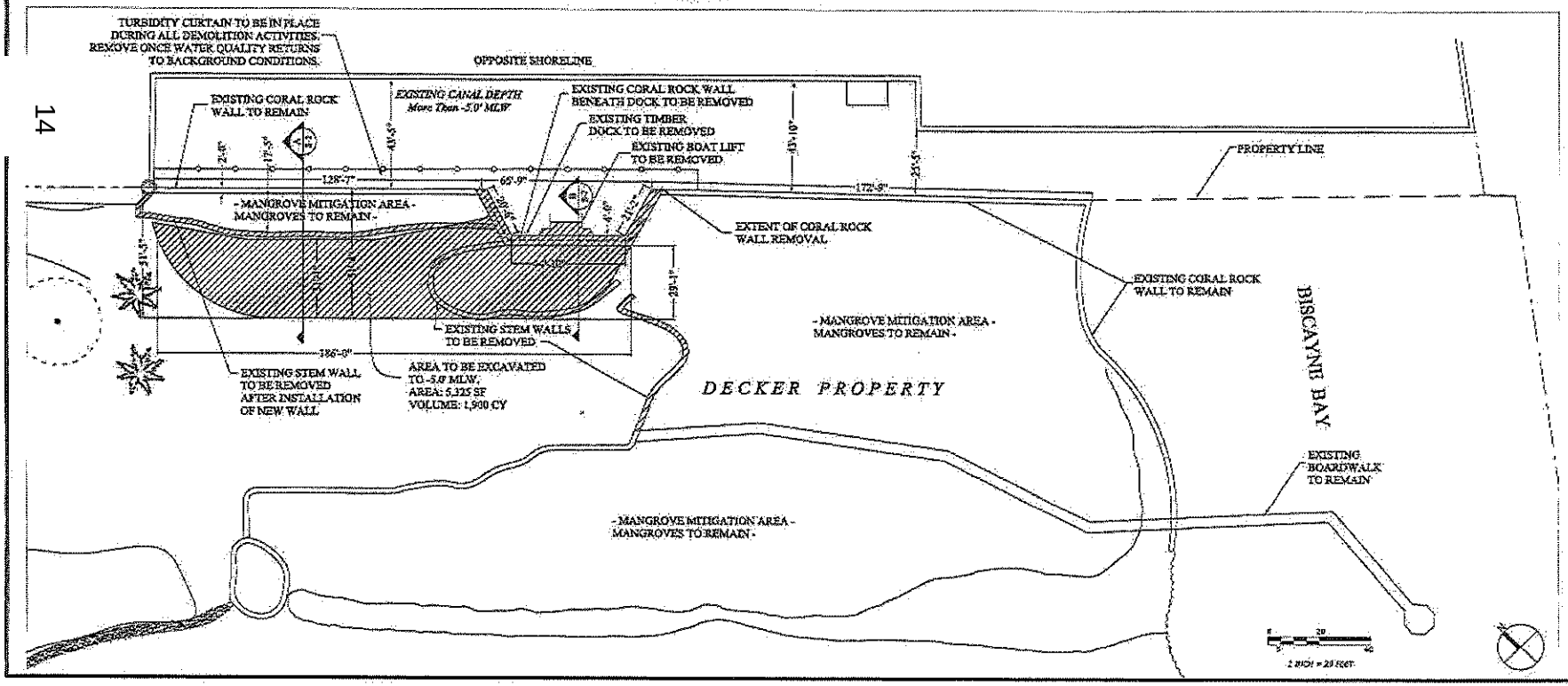

DECKER BOAT NOTCH PROJECT
3551 Main Highway
Miami, Florida 33133

CLIENT:
LA BRISA, LLC
C/O SIMON DECKER
3551 Main Highway
Miami, Florida 33133

ENVIRONMENTAL CONSULTANT:
OCEAN CONSULTING, LLC
340 Minorca Avenue, Suite 5
Coral Gables, Florida 33134
Tel: (305) 921-9344
Fax: (305) 677-3254

SOLVER STRUCTURAL PARTNERSHIP, INC.
7500 NW 25 St., Suite 212
Miami, FL 33122
Tel: (305) 592-9596
Fax: (305) 591-3447

Denis Solano
PE 56902, SI 2046, CGA 9095

PERMIT SKETCH

Issue #	Issue Date
⑤	April 2, 2012
⑥	April 30, 2012
⑦	June 19, 2012
⑧	July 2, 2012

PROJECT: 10-1275

LOCATION & EXISTING CONDITIONS

SCALE : AS SHOWN
SHEET NO.
G-1

GENERAL NOTES:

1. THE WORK CONSISTS OF FURNISHING ALL CONSTRUCTION, LABOR, EQUIPMENT AND MATERIALS AND PERFORMING ALL OPERATIONS IN CONNECTION WITH CONSTRUCTION OF BULKHEAD, TIMBER DECK, MANGROVE TRANSPLANT, AND REVETMENT IMPROVEMENTS AS SHOWN ON THESE DRAWINGS AND SPECIFIED IN THE CONTRACT DOCUMENTS.
2. THE CONTRACTOR SHALL ABIDE BY ALL NOTES AND CONDITIONS INDICATED ON THE CONSTRUCTION PLANS AND PERMITS. IF THE CONTRACTOR VIOLATES ANY CONDITION OF THE PERMIT AND WORK IS STOPPED BY THE STATE OR OTHER PUBLIC ENTITY, THEN ANY ADDITIONAL COSTS INCURRED BY THE CONTRACTOR SHALL BE PAID BY THE CONTRACTOR AND NOT CHARGED TO THE OWNER.
3. THE CONTRACTOR IS RESPONSIBLE FOR OBTAINING ALL LOCAL PERMITS NECESSARY FOR THIS WORK. A PRECONSTRUCTION MEETING WILL BE HELD ON SITE TO VERIFY DETAILS AND METHODS OF CONSTRUCTION.
4. CONTRACTOR IS RESPONSIBLE FOR LOCATING ALL UNDERGROUND UTILITIES PRIOR TO CONSTRUCTION.
5. CONTRACTOR IS RESPONSIBLE FOR COORDINATING WITH OTHER UPLAND CONTRACTORS ON SITE.
6. CONTRACTOR IS RESPONSIBLE FOR OBTAINING ALL ENVIRONMENTAL PERMITS FOR THE PROJECT. A COPY WILL BE PROVIDED TO THE CONTRACTOR, AND THE CONTRACTOR SHALL ABIDE BY ALL REGULATIONS AND PERMIT CONDITIONS.
7. CONTRACTOR IS REQUIRED TO INSTALL A TURBIDITY CURTAIN ACCORDING TO PLAN AND NOTES.
8. ANY DISCREPANCIES IN THE PLANS WITH FIELD CONDITIONS SHALL BE BROUGHT TO THE IMMEDIATE ATTENTION OF THE ENGINEER. CONSTRUCTION SHALL NOT CONTINUE UNTIL THE ENGINEER HAS ADDRESSED THE DISCREPANCIES.

DEMOLITION NOTES:

1. THE CONTRACTOR SHALL TAKE ALL NECESSARY PRECAUTIONS TO STRICTLY CONTAIN THE DEMOLITION WITHIN THE LIMITS OF THE REQUIRED CONSTRUCTION AND AVOID ANY DAMAGE TO THE EXISTING STRUCTURE.
2. PRIOR TO GENERAL DEMOLITION, THE CONTRACTOR SHALL SAWCUT WHERE NOTED OR OTHERWISE PROVIDE A SMOOTH CLEAN BREAK FROM ALL CONNECTING LINKS TO THE REMAINING STRUCTURE.
3. ANY DAMAGE INCURRED IN EXECUTION OF THIS CONTRACT TO ANY PART OF THE PROPERTY/STRUCTURE NOT SPECIFICALLY DESIGNATED FOR DEMOLITION SHALL BE REPAIRED, REPLACED, AND/OR RECONSTRUCTED BY THE CONTRACTOR TO ITS ORIGINAL CONDITION AT HIS EXPENSE.
4. THE CONTRACTOR SHALL USE METHODS OR PROCEDURES DEEMED APPROPRIATE FOR THE PRESCRIBED WORK. EXISTING STRUCTURES AND/OR COMPONENTS TEMPORARILY REMOVED TO FACILITATE SUCH WORK SHALL BE REPAIRED, RESTORED, AND/OR RECONSTRUCTED AS NOTED ABOVE.
5. ALL DEMOLISHED MATERIAL, EXCEPT AS NOTED, BECOMES THE PROPERTY OF AND SHALL BE COMPLETELY REMOVED AND DISPOSED OF BY THE CONTRACTOR. THE REMOVAL, HANDLING, AND DISPOSAL OF ALL DEMOLITION MATERIALS SHALL BE IN STRICT ACCORDANCE WITH ALL STATE AND FEDERAL REQUIREMENTS.

CONCRETE NOTES:

1. ALL CONCRETE MATERIALS, REINFORCEMENT, AND CONSTRUCTION SHALL BE IN ACCORDANCE WITH FDOT SPECIFICATION 346, 400, AND 415 EXCEPT AS NOTED.
2. PROVIDE CHAMFERS ON ALL EXPOSED EDGES AND CORNERS EXCEPT AS OTHERWISE NOTED.
3. CONSTRUCTION JOINTS WILL BE PERMITTED ONLY AT THE LOCATIONS INDICATED ON THE PLANS. ADDITIONAL CONSTRUCTION JOINTS OR ALTERATIONS TO THOSE SHOWN WILL REQUIRE APPROVAL BY THE ENGINEER.
4. REINFORCEMENT SHALL BE ASTM A615, GRADE 60.
5. ALL DIMENSIONS PERTAINING TO LOCATION OF REINFORCING ARE TO CENTER LINE OF BARS EXCEPT WHERE THE CLEAR DIMENSION IS SHOWN TO FACE OF CONCRETE.
6. NO CHAIRS OR OTHER METAL SHALL PROTRUDE FROM SURFACE OF CONCRETE.
7. MINIMUM CONCRETE COVER SHALL BE 3" TO OUTSIDE OF BAR.
8. ALL CAST-IN-PLACE CONCRETE TO BE A MINIMUM OF 5000 PSI COMPRESSIVE STRENGTH AT 28 DAYS WITH A MAX W/C RATIO OF 0.4.
9. PROVIDE MIX DESIGN FOR A CLASS IV CONCRETE FOR AN EXTREMELY AGGRESSIVE (MARINE) ENVIRONMENT IN ACCORDANCE WITH FDOT SPECIFICATIONS. PROVIDE SUFFICIENT AMOUNT OF FLY ASH, MICROSILICA, OR SLAG TO THE CEMENT CONTENT TO INCREASE IMPERMEABILITY OF CONCRETE.
10. CURE PLACED CONCRETE IN ACCORDANCE WITH FDOT SPECIFICATION 400-16.1.
11. PROVIDE ADHESIVE BONDED DOWELS IN ACCORDANCE WITH FDOT SECTION 416.
12. COAT CONCRETE CAP WITH THOROCOAT IN ACCORDANCE WITH MANUFACTURERS INSTRUCTIONS. PROVIDE COARSE FINISH, OWNER TO SPECIFY COLOR.

LAYOUT AND TESTING:

1. ALL CONSTRUCTION STAKEOUT SHALL BE PERFORMED BY AND PAID FOR BY THE CONTRACTOR UNDER THE SUPERVISION OF A FLORIDA REGISTERED SURVEYOR.
2. ALL TESTING AND INSPECTION FOR CONCRETE MATERIALS SHALL BE IN ACCORDANCE WITH FDOT SPECIFICATIONS, AND SHALL BE PERFORMED BY AN INDEPENDENT TESTING LABORATORY PROVIDED BY THE OWNER.
3. CONTRACTOR SHALL PROVIDE THE ENGINEER WITH A SET OF AS-BUILT DRAWINGS IN SUFFICIENT DETAILS TO ILLUSTRATE THE HORIZONTAL AND VERTICAL COMPONENTS OF ABOVE AND BELOW GROUND STRUCTURES AND WALLS RELATIVE TO THE CONSTRUCTION BASELINE.

SHOP DRAWINGS:

PROVIDE SHOP DRAWINGS AND/OR CATALOG CUTS FOR THE FOLLOWING ITEMS FOR REVIEW AND APPROVAL BY THE ENGINEER PRIOR TO CONSTRUCTION:
A. DEMOLITION METHODS AND DISPOSAL PLAN
B. CONCRETE MIX DESIGNS FOR CAST-IN-PLACE CONCRETE
C. CURING COMPOUND (IF APPLICABLE)
D. REINFORCING STEEL
E. PILE DRIVING MEANS AND METHODS INCLUDING PILE HAMMER DATA
F. FORMWORK
G. SCHEDULE FOR COMPLETION OF WORK WITH TASKS AND DURATIONS DEFINED
H. SHEET PILING
I. EXPANSION JOINT MATERIALS
J. COATING

SHEET PILING NOTES:

1. STEEL SHEET PILING SHALL BE OF THE SECTIONS INDICATED, AND SHALL BE ASTM A572 GRADE 50.
2. SHEET PILING SHALL BE COATED WITH TNEMEC TAR (46H-413) COAL TAR EPOXY: TOP 20', BOTH SIDES EXCEPT AS NOTED.
3. COATING SHALL BE 16 MILS DRY FILM THICKNESS, AND APPLIED IN STRICT ACCORDANCE WITH MANUFACTURER INSTRUCTIONS.
4. DRIVE SHEET PILING IN ACCORDANCE WITH FDOT 455-9.
5. CONTRACTOR SHALL BE PREPARED TO DRIVE SHEET PILING THROUGH LIMESTONE LAYERS; REFER TO GEOTECHNICAL REPORT.
6. ANY DAMAGED COATING DUE TO HANDLING, DRIVING, ETC, SHALL BE REPAIRED IN STRICT ACCORDANCE WITH COATING MANUFACTURER INSTRUCTIONS.

TURBIDITY CURTAIN NOTES:

1. TURBIDITY CURTAIN TO BE INSTALLED AS SHOWN, PRIOR TO CONSTRUCTION.
2. TURBIDITY CURTAIN SHALL BE TYPE I OR EQUIVALENT.
3. THE TURBIDITY CURTAIN SHALL BE SECURED TO THE BULKHEAD ON EITHER SIDE OF THE CONSTRUCTION AREA AND FREE OF ANY GAPS.
4. TURBIDITY CURTAIN TO BE LOCATED OUTSIDE OF ANY NAVIGABLE CHANNEL.
5. TURBIDITY CURTAIN TO AVOID ALL PROTECTED SEAGRASS AREAS.

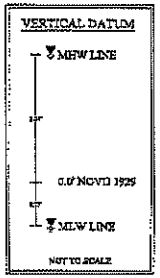

RECEIVED
JUL 0 2 2012
DERM Coastal Resources Section
Natural Resources Regulation & Restoration
Division (NRRRD)

15

DECKER BOAT NOTCH PROJECT
3551 Main Highway
Miami, Florida 33133

CLIENT:
LA BRISA, LLC
C/O SIMON DECKER
3551 Main Highway
Miami, Florida 33133

ENVIRONMENTAL CONSULTANT:
OCEAN CONSULTING, LLC
340 Minorca Avenue, Suite 5
Coral Gables, Florida 33134
Tel: (305) 921-9544
Fax: (305) 677-3254

SOLVER STRUCTURAL PARTNERSHIP, INC.
7500 NW 25 St., Suite 212
Miami, FL 33122
Tel: (305) 592-9396
Fax: (305) 591-3447

Denis Solano
PE 56902, SI 2046, COA 9005

PERMIT SKETCH

Issue #	Issue Date
⑤	April 2, 2012
⑥	April 30, 2012
⑦	June 19, 2012
⑧	July 2, 2012

PROJECT: 10-1275

GENERAL NOTES

SCALE : AS SHOWN
SHEET NO.
S-1

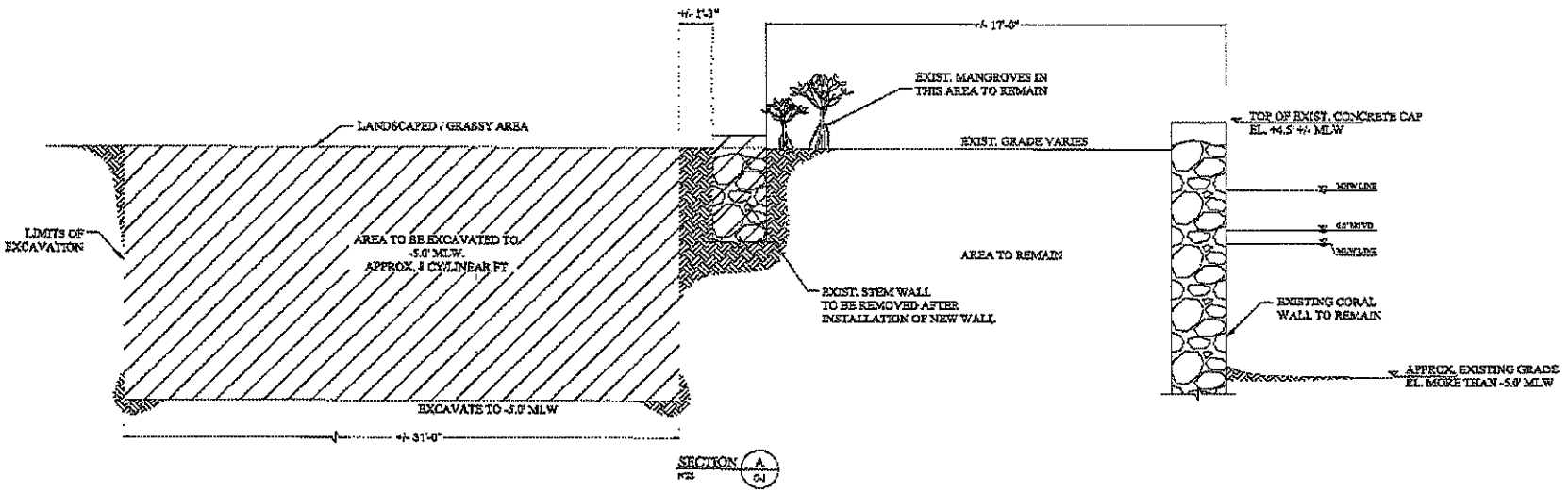

TOTAL VOLUME OF EXCAVATED MATERIAL = 1,900 CU. YDS.
TOTAL AREA OF EXCAVATED MATERIAL = 5,325 SQ. FT.

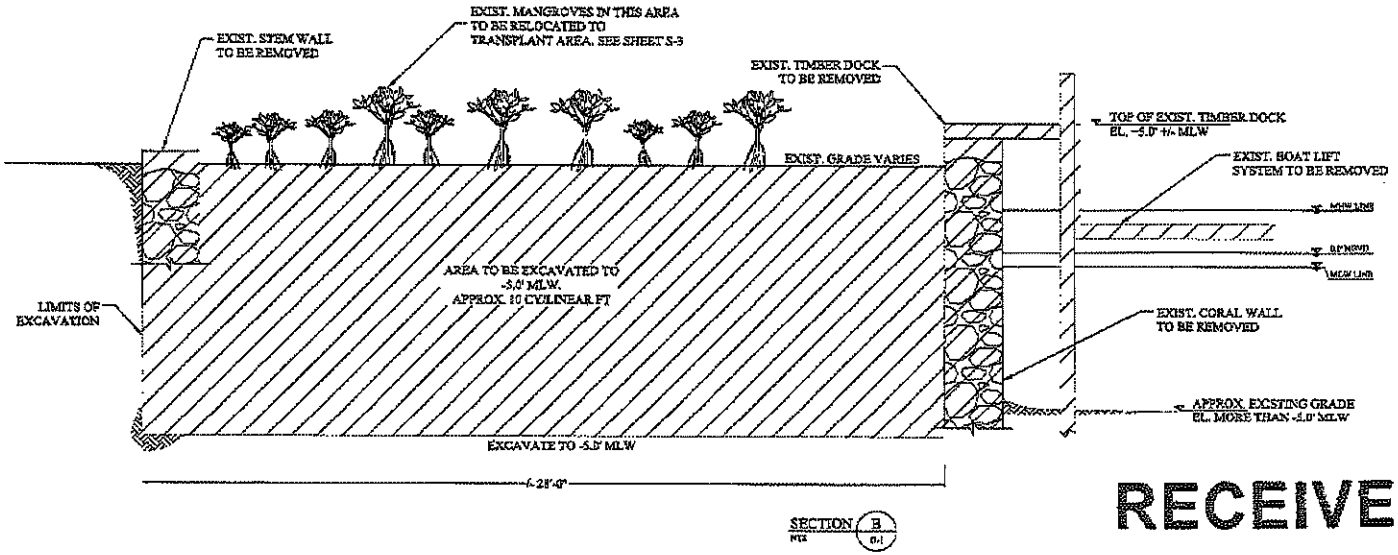

RECEIVED
JUL 02 2012
DERM Coastal Resources Section
Natural Resources Regulation & Restoration
Division (NRRRD)

16

DECKER BOAT NOTCH PROJECT
3551 Main Highway
Miami, Florida 33133

CLIENT:
LA BRISA, LLC
C/O SIMON DECKER
3551 Main Highway
Miami, Florida 33133

ENVIRONMENTAL CONSULTANT:
OCEAN CONSULTING, LLC
340 Minorca Avenue, Suite 5
Coral Gables, Florida 33134
Tel: (305) 921-9344
Fax: (305) 677-3254

SOLVER STRUCTURAL PARTNERSHIP, INC.
7500 NW 25 St., Suite 212
Miami, FL 33122
Tel: (305) 592-9396
Fax: (305) 591-3447

Denis Solano
PE 56902, SI 2046, COA 9995

PERMIT SKETCH

Issue #	Issue Date
5	April 2, 2012
6	April 30, 2012
7	June 19, 2012
8	July 2, 2012

PROJECT: 10-1275

DEMOLITION SECTION VIEWS

SCALE : AS SHOWN
SHEET NO.
S-2

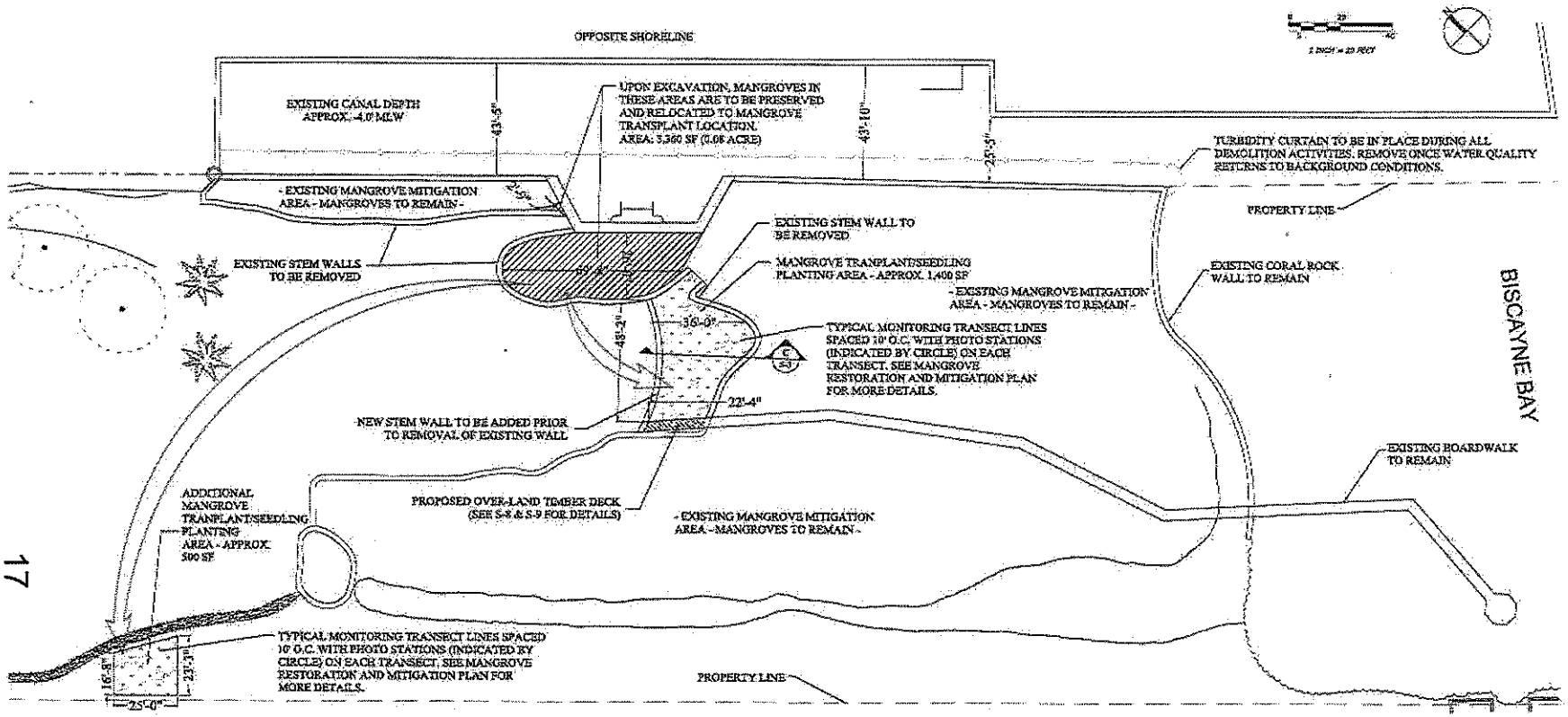

17

DECKER BOAT NOTCH PROJECT
3551 Main Highway
Miami, Florida 33133

CLIENT:
LA BRISA, LLC
C/O SIMON DECKER
3551 Main Highway
Miami, Florida 33133

ENVIRONMENTAL CONSULTANT:
OCEAN CONSULTING, LLC
340 Minorca Avenue, Suite 5
Coral Gables, Florida 33134
Tel: (305) 921-9344
Fax: (305) 677-3254

SOLVER STRUCTURAL PARTNERSHIP, INC.
7500 NW 25 St., Suite 212
Miami, FL 33122
Tel: (305) 592-9596
Fax: (305) 591-3447

Denis Solano
PE 58902, SI 2046, COA 9095

PERMIT SKETCH

Issue #	Issue Date
(5)	April 2, 2012
(6)	April 30, 2012
(7)	June 19, 2012
(8)	July 2, 2012

PROJECT: 10-1275

MANGROVE TRANSPLANT PLAN

SCALE : AS SHOWN
SHEET NO.
S-3

RECEIVED
JUL 0 2 2012
DERM Coastal Resources Section
Natural Resources Regulation & Restorati

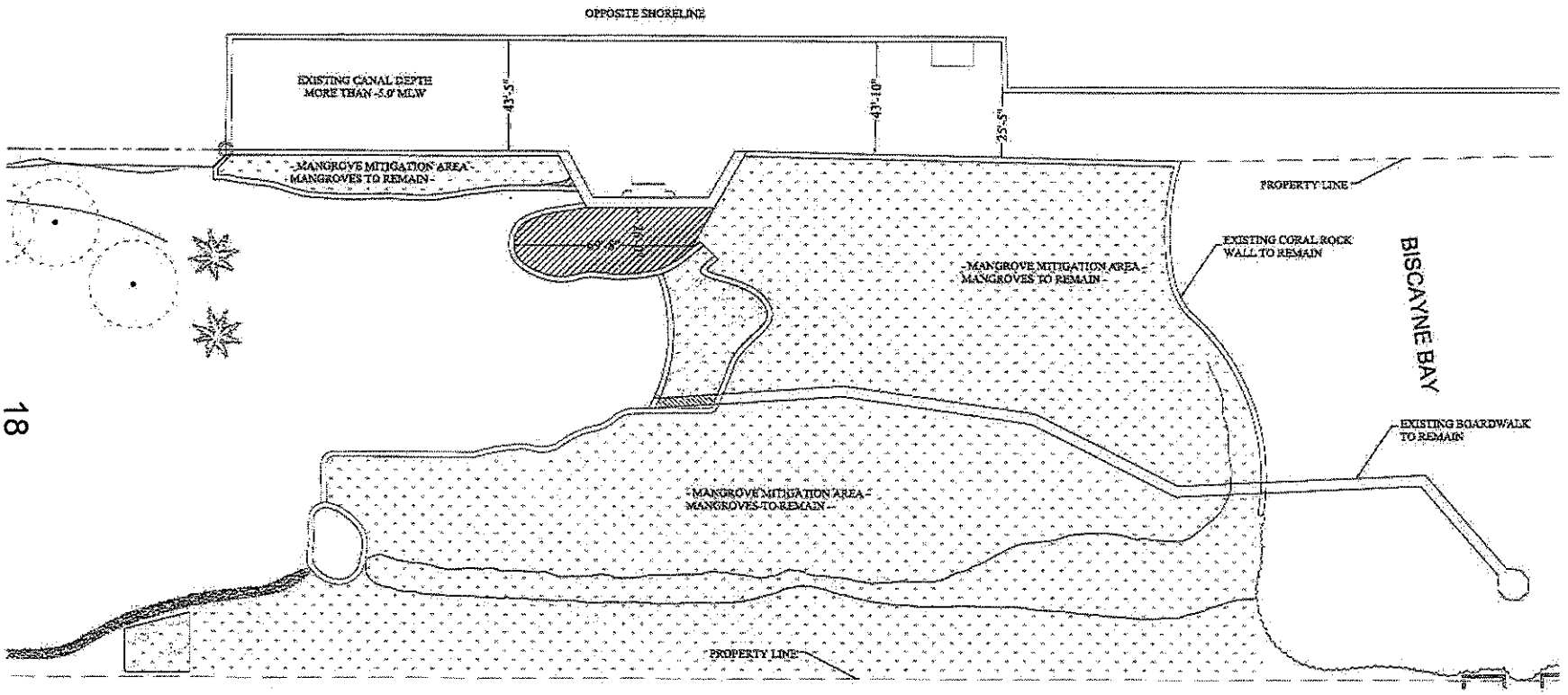

18

RECEIVED

JUL 0 2 2012

DERM Coastal Resources Section
Natural Resources Regulation & Restoration
Division (NRRRD)

DECKER BOAT NOTCH PROJECT
3551 Main Highway
Miami, Florida 33133

CLIENT:
LA BRISA, LLC
C/O SIMON DECKER
3551 Main Highway
Miami, Florida 33133

ENVIRONMENTAL CONSULTANT:
OCEAN CONSULTING, LLC
340 Minorca Avenue, Suite 5
Coral Gables, Florida 33134
Tel: (305) 921-9344
Fax: (305) 677-9254

SOLVER STRUCTURAL PARTNERSHIP, INC.
7500 NW 25 St., Suite 212
Miami, FL 33122
Tel: (305) 592-9396
Fax: (305) 591-3447

Dario Solano
PE 56902, SI 2046, COA 9095

PERMIT SKETCH

Issue #	Issue Date
⑤	April 2, 2012
⑥	April 30, 2012
⑦	June 19, 2012
⑧	July 2, 2012

PROJECT: 10-1275

MANGROVE MITIGATION AREAS - POST-CONSTRUCTION

SCALE : AS SHOWN

SHEET NO.

S-3A

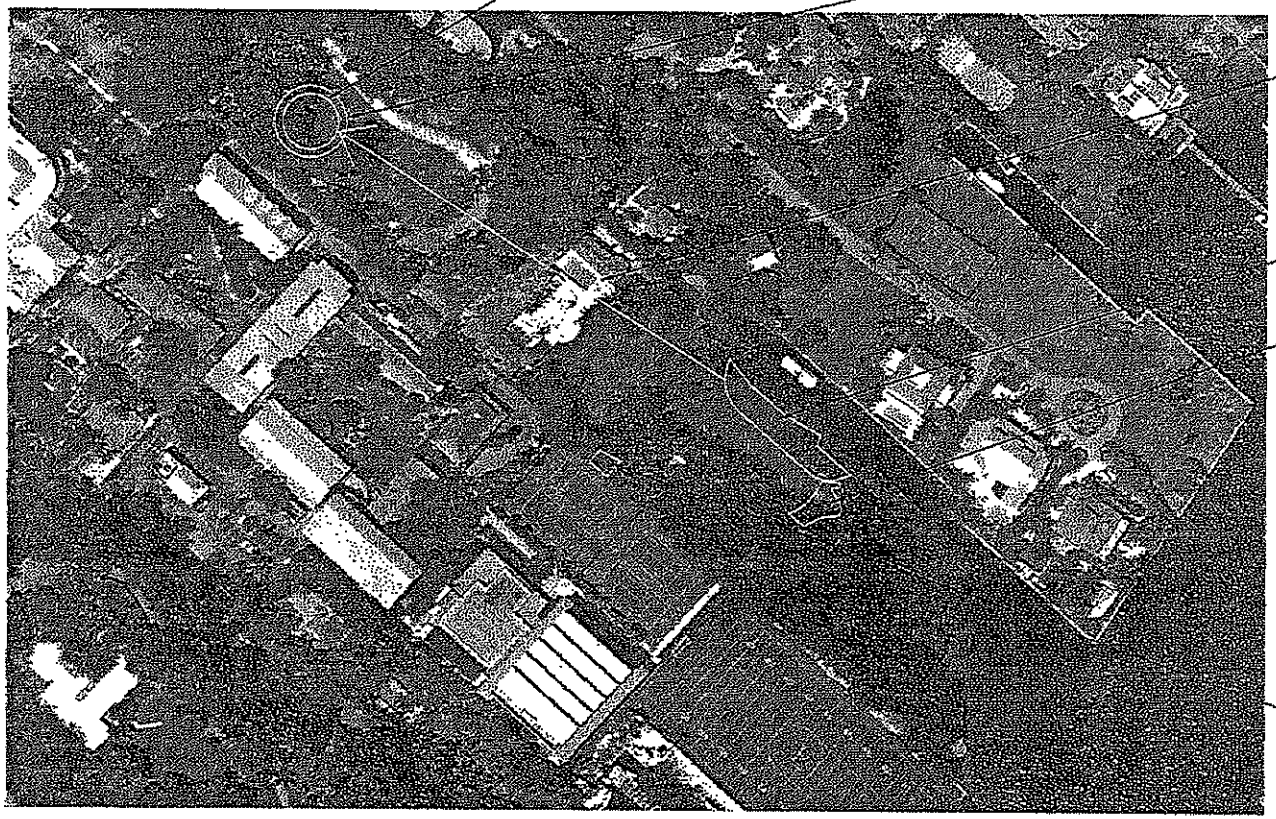

EXCAVATED MATERIAL MANAGEMENT PLAN:

1. ALL EXCAVATED MATERIAL TO REMAIN ON THE DECKER PROPERTY.
2. EXCAVATED MATERIAL TO BE KEPT IN WATER-TIGHT-CONTAINERS AS IT IS TRANSPORTED BY TRUCK TO SPECIFIED DEPOSITION AREA. NOTE MATERIAL IS NOT EXPECTED TO BE OVERLY DAMP SINCE THIS IS A LANDWARD EXCAVATION.
3. A 400 SQ. FT. DEPRESSION APPROX. 600 FT FROM THE DELINEATED WETLAND AREAS HAS BEEN SELECTED AS THE DEPOSITION AREA. IT IS WITHIN THE BOUNDARIES OF THE DECKER PROPERTY AND IS 650 FT. FROM THE CLOSEST BODY OF WATER.
4. A HAY BALE BERM WILL SURROUND THE EXCAVATED MATERIAL ONCE IT IS IN ITS PROPOSED DEPOSITION AREA. THE BERM WILL BE REMOVED ONCE THE EXCAVATED MATERIAL IS DRY.
5. THE DEPOSITION AREA WILL BE LANDSCAPED TO MATCH THE REMAINDER OF THE DECKER PROPERTY.

RECEIVED
JUL 0 2 2012
DERM Coastal Resources Section
Natural Resources Regulation & Restoratic
Division (NRRRD)

DECKER BOAT NOTCH PROJECT

3551 Main Highway
Miami, Florida 33133

CLIENT:
LA BRISA, LLC
C/O SIMON DECKER
3551 Main Highway
Miami, Florida 33133

ENVIRONMENTAL CONSULTANT:
OCEAN CONSULTING, LLC
340 Minorca Avenue, Suite 5
Coral Gables, Florida 33134
Tel: (305) 921-9344
Fax: (305) 677-3256

SOLVER STRUCTURAL PARTNERSHIP, INC.
7500 NW 25 St., Suite 212
Miami, FL 33122
Tel: (305) 592-9396
Fax: (305) 591-3447

Denis Solano
PE 55903, SI 2046, COA 9095

PERMIT SKETCH

Issue #	Issue Date
5	April 2, 2012
6	April 30, 2012
7	June 19, 2012
8	July 2, 2012

PROJECT: 10-1275

EXCAVATED MATERIAL DISPOSAL PLAN

SCALE : AS SHOWN

SHEET NO.

S-4

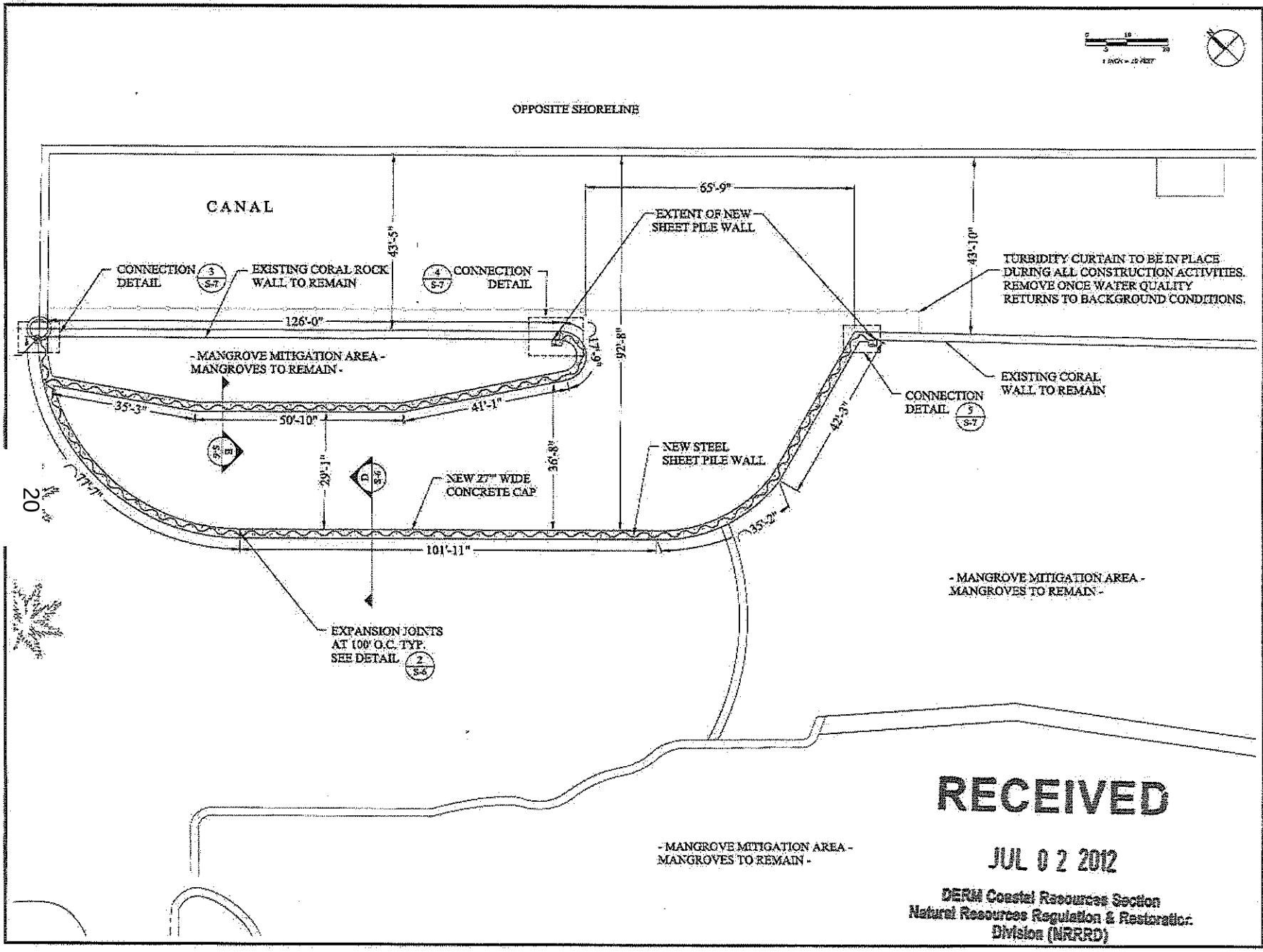

RECEIVED
JUL 0 2 2012
DERM Coastal Resources Section
Natural Resources Regulation & Restoration Division (NRRRD)

DECKER BOAT NOTCH PROJECT
3551 Main Highway
Miami, Florida 33133

CLIENT:
LA BRISA, LLC
C/O SIMON DECKER
3551 Main Highway
Miami, Florida 33133

ENVIRONMENTAL CONSULTANT:
OCEAN CONSULTING, LLC
340 Minorca Avenue, Suite 5
Coral Gables, Florida 33134
Tel: (305) 921-9344
Fax: (305) 677-9254

SOLVER STRUCTURAL PARTNERSHIP, INC.
7500 NW 25 St., Suite 212
Miami, FL 33122
Tel: (305) 592-9396
Fax: (305) 591-3447

Denis Solano
PE 56902, SI 2046, COA 9095

PERMIT SKETCH

Issue #	Issue Date
5	April 2, 2012
6	April 30, 2012
7	June 19, 2012
8	July 2, 2012

PROJECT: 10-1275

NEW BULKHEAD PLAN

SCALE : AS SHOWN

SHEET NO.
S-5

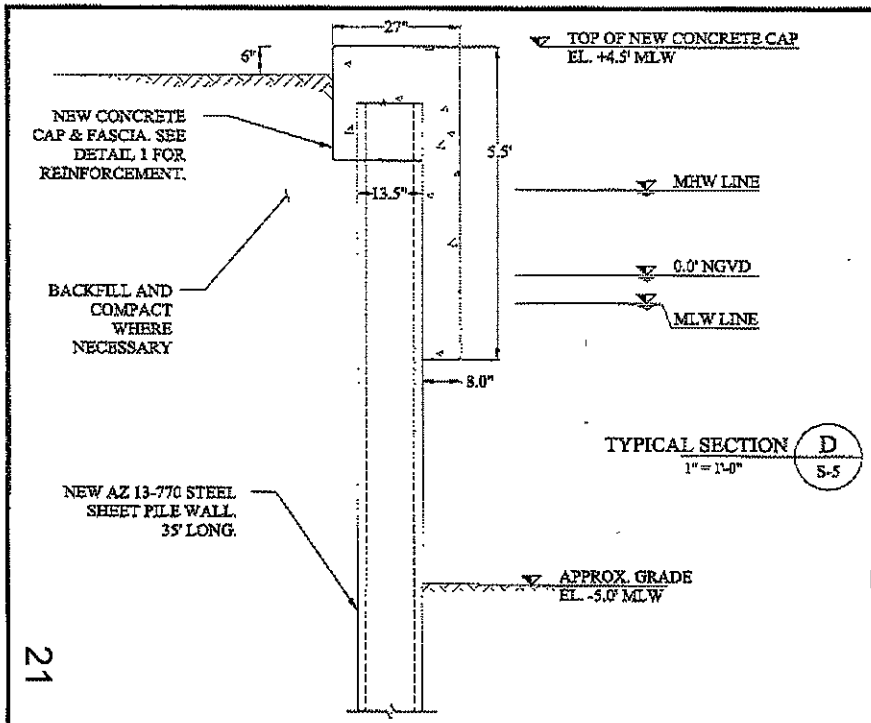

TYPICAL SECTION D
1" = 1'-0"
S-5

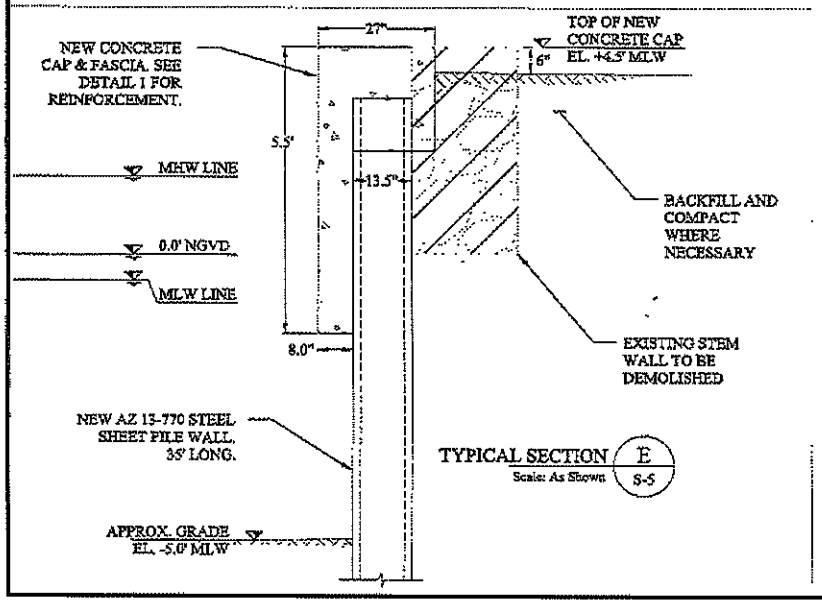

TYPICAL SECTION E
Scale: As Shown
S-5

RECEIVED
JUL 0 2 2012
DERM Coastal Resources Section
Natural Resources Regulation & Restoration
Division (NRRRD)

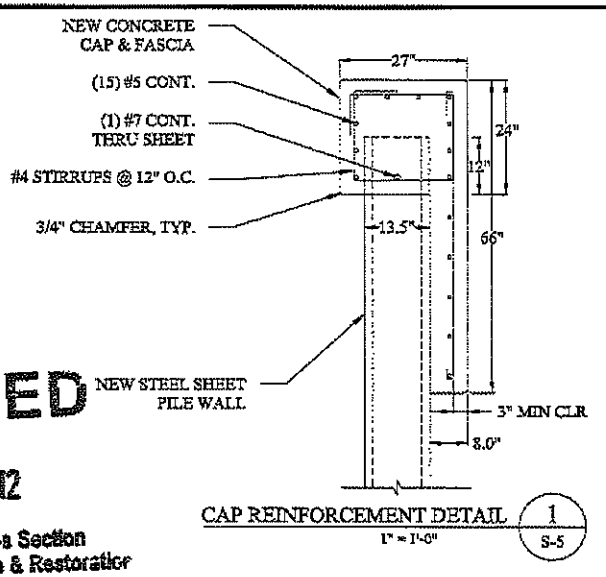

CAP REINFORCEMENT DETAIL 1
1" = 1'-0"
S-5

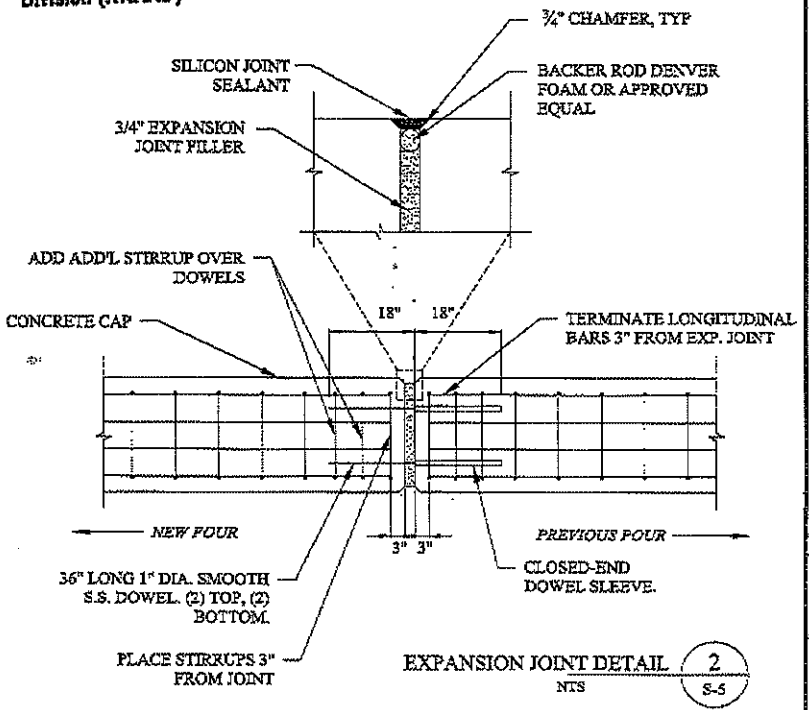

EXPANSION JOINT DETAIL 2
NTS
S-5

21

DECKER BOAT NOTCH PROJECT
3551 Main Highway
Miami, Florida 33133

CLIENT:
LA BRISA, LLC
C/O SIMON DECKER
3551 Main Highway
Miami, Florida 33133

ENVIRONMENTAL CONSULTANT:
OCEAN CONSULTING, LLC
340 Minorca Avenue, Suite 5
Coral Gables, Florida 33134
Tel: (305) 921-9344
Fax: (305) 677-3254

SOLVER STRUCTURAL PARTNERSHIP, INC.
7500 NW 25 St., Suite 212
Miami, FL 33122
Tel: (305) 592-9396
Fax: (305) 591-3447

Denis Solano
PE 56902, SI 2046, COA 9095

PERMIT SKETCH

Issue #	Issue Date
5	April 2, 2012
6	April 30, 2012
7	June 19, 2012
8	July 2, 2012

PROJECT: 10-1275

NEW BULKHEAD SECTION & DETAILS

SCALE : AS SHOWN
SHEET NO.
S-6

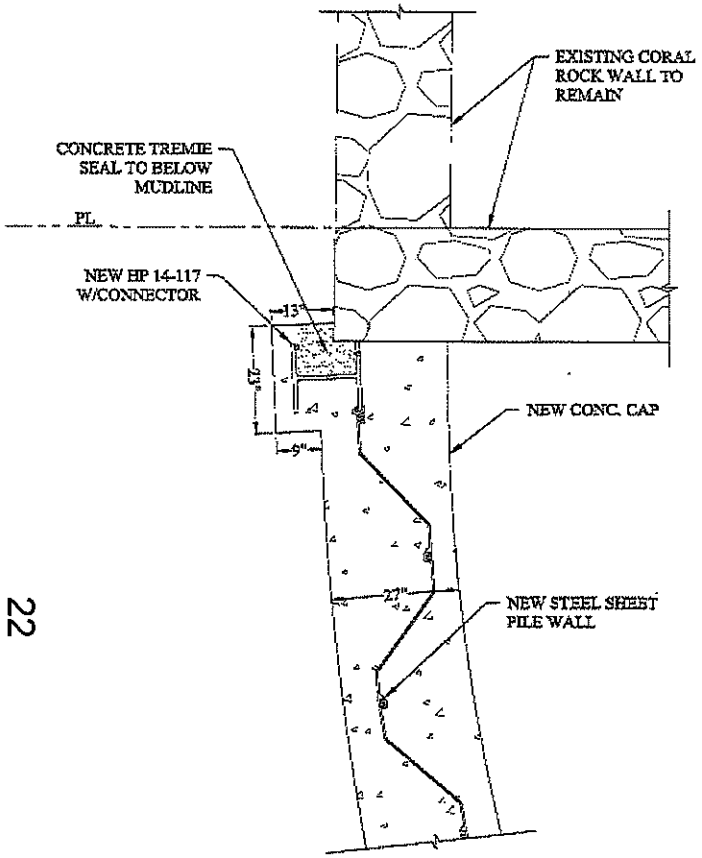

CONNECTION DETAIL 3 / S-5
1" = 1'-0"

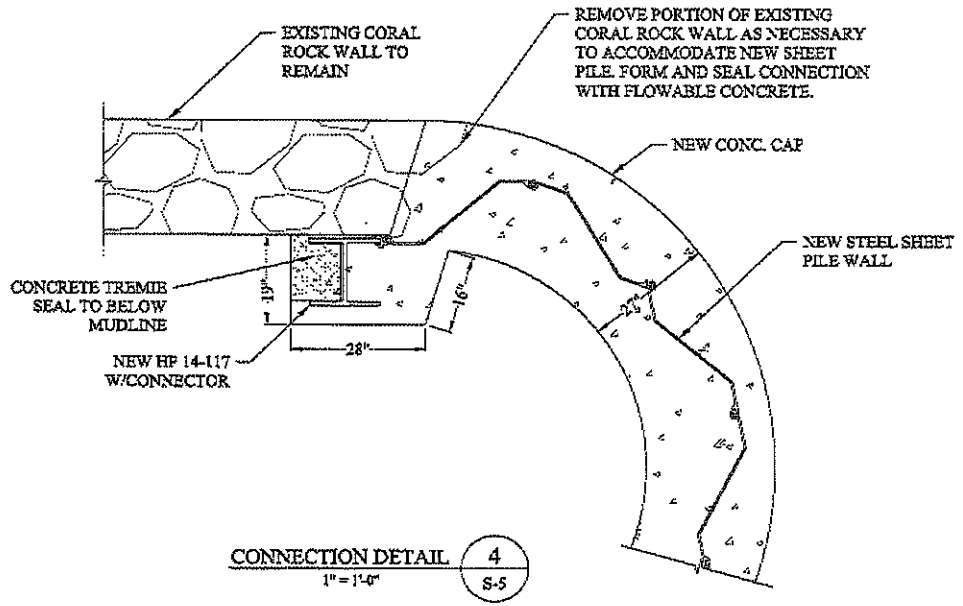

CONNECTION DETAIL 4 / S-5
1" = 1'-0"

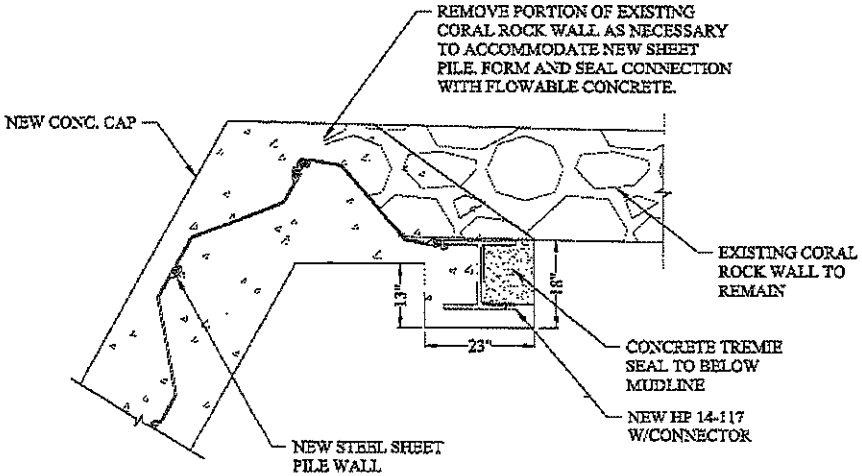

CONNECTION DETAIL 5 / S-5
1" = 1'-0"

22

RECEIVED
JUL 0 2 2012
DERM Coastal Resources Section
Natural Resources Regulation & Restoration
Division (NRRRD)

DECKER BOAT NOTCH PROJECT
3551 Main Highway
Miami, Florida 33133

CLIENT:
LA BRISA, LLC
C/O SIMON DECKER
3551 Main Highway
Miami, Florida 33133

ENVIRONMENTAL CONSULTANT:
OCEAN CONSULTING, LLC
340 Minorca Avenue, Suite 5
Coral Gables, Florida 33134
Tel: (305) 921-9344
Fax: (305) 677-3254

SOLVER STRUCTURAL PARTNERSHIP, INC.
7500 NW 25 St., Suite 212
Miami, FL 33122
Tel: (305) 592-9396
Fax: (305) 591-3447

Denis Solano
PE 56902, SI 2046, COA 9095

PERMIT SKETCH

Issue #	Issue Date
5	April 2, 2012
6	April 30, 2012
7	June 19, 2012
8	July 2, 2012

PROJECT: 10-1275

NEW BULKHEAD CONNECTION DETAILS

SCALE : AS SHOWN
SHEET NO.
S-7

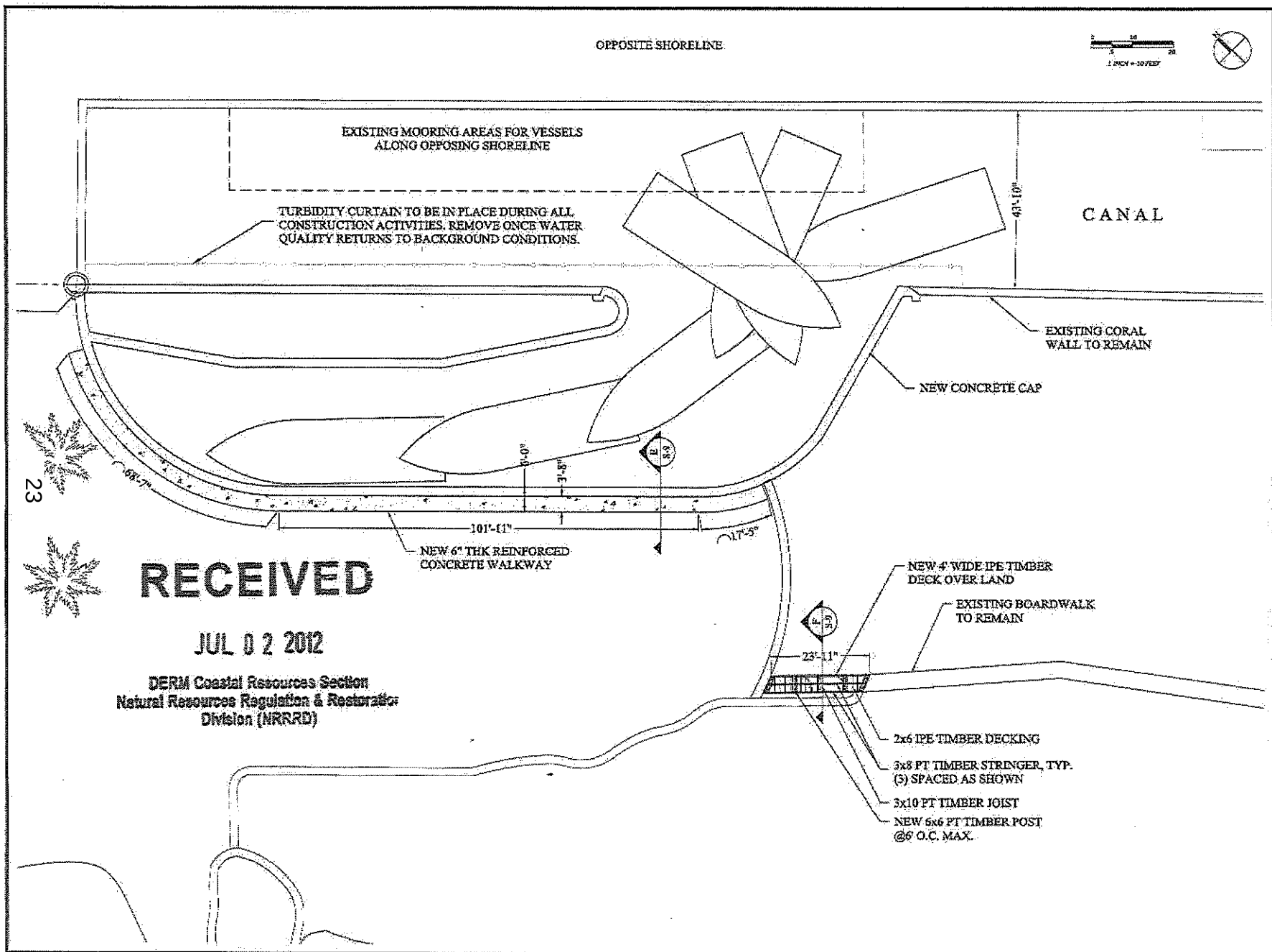

23

RECEIVED

JUL 0 2 2012

DERM Coastal Resources Section
Natural Resources Regulation & Restoration
Division (NRRRD)

DECKER BOAT NOTCH PROJECT

3551 Main Highway
Miami, Florida 33133

CLIENT:
LA BRISA, LLC
C/O SIMON DECKER
3551 Main Highway
Miami, Florida 33133

ENVIRONMENTAL CONSULTANT:
OCEAN CONSULTING, LLC
540 Minorca Avenue, Suite 5
Coral Gables, Florida 33134
Tel: (305) 921-9344
Fax: (305) 677-3254

SOLVER STRUCTURAL PARTNERSHIP, INC.
7500 NW 25 St., Suite 212
Miami, FL 33122
Tel: (305) 592-9396
Fax: (305) 591-3447

Denis Solver
PE 56902, SI 2046, COA 9095

PERMIT SKETCH

Issue #	Issue Date
5	April 2, 2012
6	April 30, 2012
7	June 19, 2012
8	July 2, 2012

PROJECT: 10-1275

NEW OVER LAND WALKWAYS PLAN

SCALE : AS SHOWN
SHEET NO.

S-8

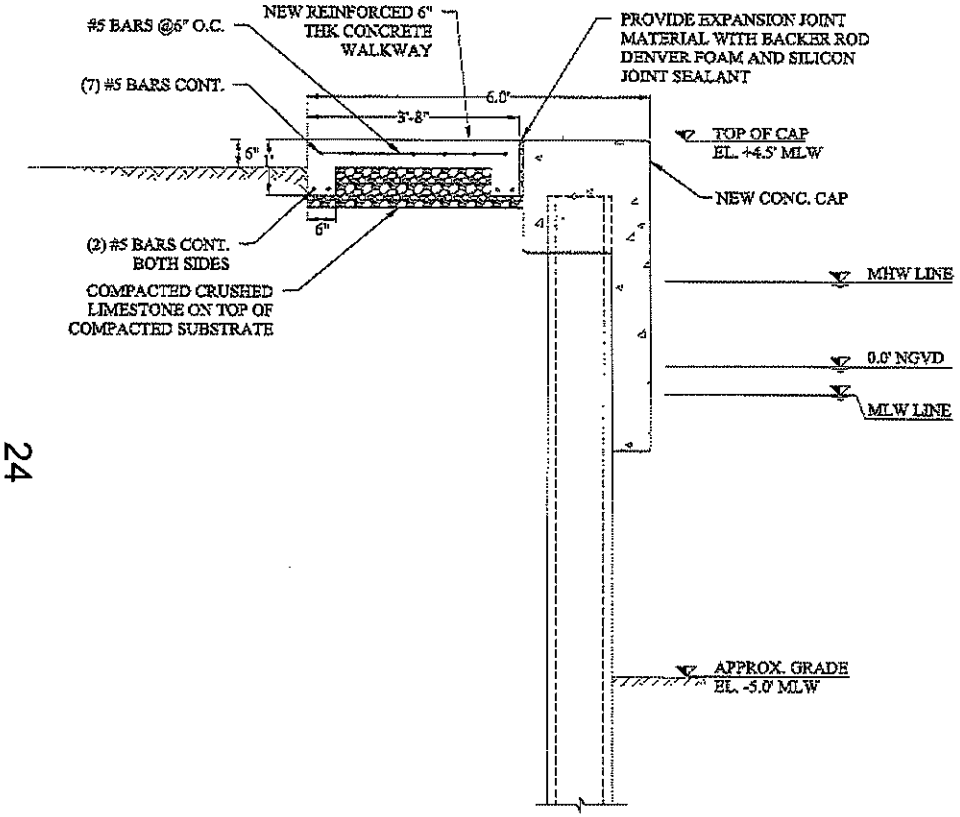

TYPICAL SECTION E
1" = 1'-0"
S-8

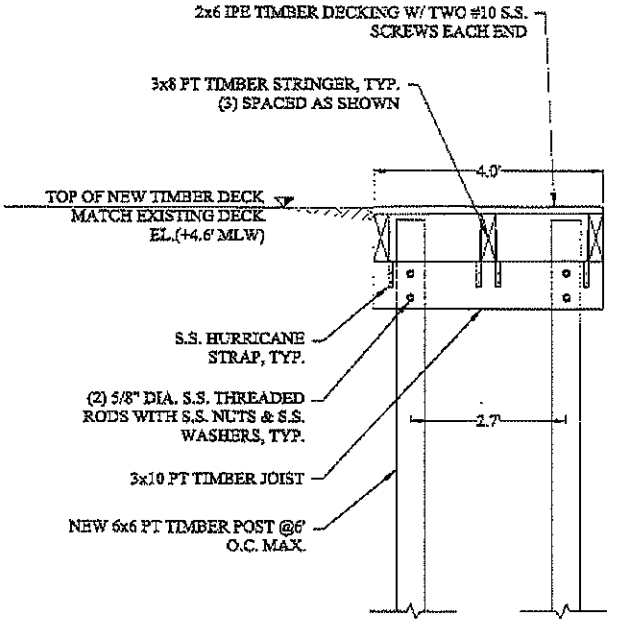

TYPICAL SECTION F
1" = 1'-0"
S-8

RECEIVED
JUL 0 2 2012
DERM Coastal Resources Section
Natural Resources Regulation & Restoration
Division (NRRRD)

24

DECKER BOAT NOTCH PROJECT
3551 Main Highway
Miami, Florida 33133

CLIENT:
LA BRISA, LLC
C/O SIMON DECKER
3551 Main Highway
Miami, Florida 33133

ENVIRONMENTAL CONSULTANT:
OCEAN CONSULTING, LLC
340 Minorca Avenue, Suite 5
Coral Gables, Florida 33134
Tel: (305) 921-9344
Fax: (305) 677-3254

SOLVER STRUCTURAL PARTNERSHIP, INC.
7500 NW 25 St., Suite 212
Miami, FL 33122
Tel: (305) 592-9396
Fax: (305) 591-3447

Denis Solano
PE 56901, SI 2046, COA 9095

PERMIT SKETCH

Issue #	Issue Date
⑤	April 2, 2012
⑥	April 30, 2012
⑦	June 19, 2012
⑧	July 2, 2012

PROJECT: 10-1275

NEW OVER LAND WALKWAYS SECTIONS

SCALE : AS SHOWN
SHEET NO.
S-9

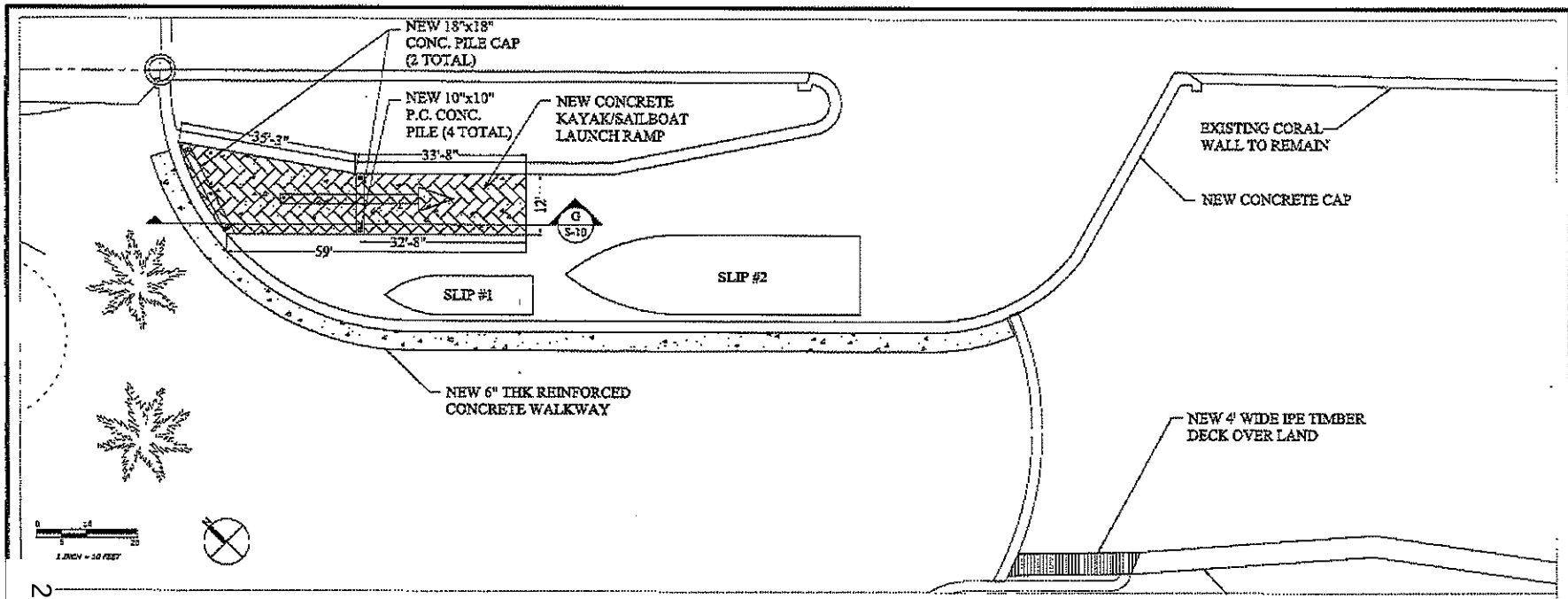

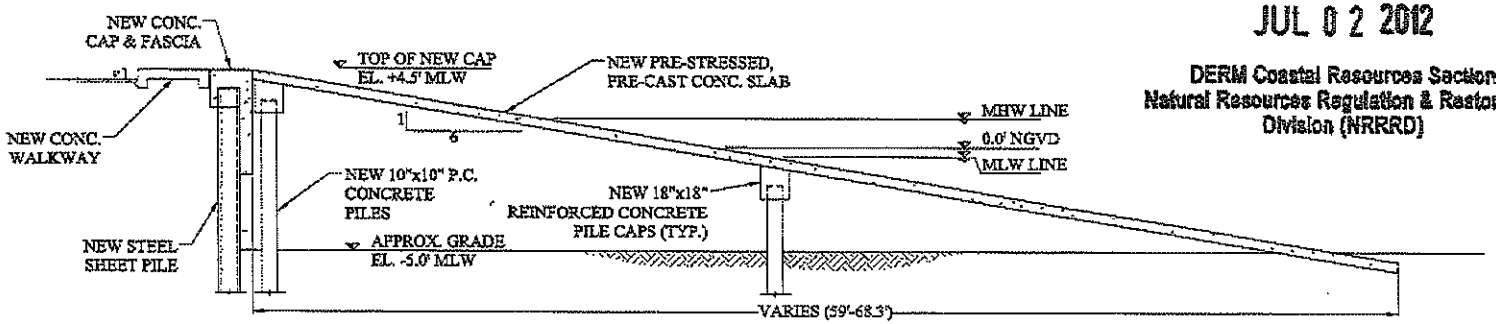

TYPICAL SECTION G / S-10
1/5" = 1'-0"

RECEIVED
JUL 0 2 2012
DERM Coastal Resources Section
Natural Resources Regulation & Restoration
Division (NRRRD)

25

DECKER BOAT NOTCH PROJECT

3551 Main Highway
Miami, Florida 33133

CLIENT:
LA BRISA, LLC
C/O SIMON DECKER
3551 Main Highway
Miami, Florida 33133

ENVIRONMENTAL CONSULTANT:
OCEAN CONSULTING, LLC
340 Minorca Avenue, Suite 5
Coral Gables, Florida 33134
Tel: (305) 921-9344
Fax: (305) 677-3254

SOLVER STRUCTURAL PARTNERSHIP, INC.
7500 NW 25 St., Suite 212
Miami, FL 33122
Tel: (305) 592-9396
Fax: (305) 591-3447

Denis Solano
PE 56902, SI 2046, COA 9095

PERMIT SKETCH

Issue #	Issue Date
③	April 2, 2012
⑥	April 30, 2012
⑦	June 19, 2012
⑧	July 2, 2012

PROJECT: 10-1275

PROPOSED SLIP LAYOUT & LAUNCH RAMP

SCALE : AS SHOWN
SHEET NO.
S-10

Attachment C

Zoning Memorandum

Memorandum

MIAMI-DADE COUNTY

Date: September 18, 2012

To: Lisa Spadafina, Manager
Coastal and Wetlands Resources Section
Department of Regulatory and Economic Resources

From: Nicole Fresard, Biologist II
Coastal and Wetlands Resources Section
Department of Regulatory and Economic Resources

Subject: Class I Permit Application by La Brisa, LLC to Excavate Wetlands for the Construction of a Residential Boat Notch and to Authorize the Acceptance of a Restrictive Covenant Running with the Land in Favor of Miami-Dade County at 3551 Main Highway in the City of Miami

---

Pursuant to Section 24-48.2(II)(A)(7), of the Code of Miami-Dade County, Florida, a substantiating letter shall be submitted by the applicant stating that the proposed project does not violate any zoning laws. Said letter will be submitted after approval by the Miami-Dade County Board of County Commissioners and prior to issuance of the Class I permit.

Attachment D

Names and Addresses of Owners of All Riparian or Property Within Three Hundred (300) Feet of the Proposed Work

41210000040

ERMAN RAMIREZ
ONICA RAMIREZ
80 MAIN HWY
AMI, FL 33133-5920

0141210000050

MARGUERITE BETTS KING TR
139 BLUFF VIEW DR APT 204
LARGO, FL 33770-1317

0141210000060

JOAN RADFORD TR
C/O DEBORAH HESLER TRS
JOAN RADFORD (BEN)
2826 PAR LN
TALLAHASSEE, FL 32301-6858

41210000080

OLFO PICHARDO &W ANNETTE
BOX 438
DE CITY, FL 33526-0438

0141210000090

PEDRO SOTO
3590 MAIN HWY
MIAMI, FL 33133-5920

0141210000100

EHTERAM NAGHOUSI
3001 W HALLANDALE BEACH BLVD STE 300
HALLANDALE, FL 33009-5158

41210000120

LLIAMS HUBBELL
70 MAIN HWY
AMI, FL 33133-5920

0141210075400

ROBERT LAPSLEY &W GLORIA
3268 CHARLES AVE
MIAMI, FL 33133-5802

0141210075410

RICARDO & MERCEDES & JOAQUIN DIAZ
3254 CHARLES AVE
MIAMI, FL 33133-5802

41210075411

ARIE M MIHALIK
330 SW 41ST ST
AMI, FL 33165-4607

0141210075420

STIRRUP PROPERTIES INC
3619 PERCIVAL AVE
MIAMI, FL 33133-4909

0141210110010

DAVID HILL &W CHRISTINE
3540 MAIN HWY
MIAMI, FL 33133-5933

41210110020

NSOM EVERGLADES SCHOOL INC
75 MAIN HWY
AMI, FL 33133-5903

0141210450140

COCONUT GROVE PLAYHOUSE LLC
3500 MAIN HWY
MIAMI, FL 33133-5904

0141210450180

RANSOM SCHOOL INC
3575 MAIN HWY
MIAMI, FL 33133-5903

41210480030

GGY B HUTSON TRUSTEE
0 MUNROE DR
AMI, FL 33133-5917

0141210490060

ELIZABETH LEE CLARKE
3267 FRANKLIN AVE
MIAMI, FL 33133-5841

0141210490070

PEDRO A RIBEIRO DA SILVA
7255 W LAGO DR
MIAMI, FL 33143-6524

1210490490

OLAS FELIZOLA
6 MAIN HWY
AMI, FL 33133-5920

0141210840010

REGIONS FIANACIAL CORP
% REGIONS BANK
250 RIVERCHASE PKWY E FL 6
BIRMINGHAM, AL 35244-1832

0141210850080

ARTHUR GOLDBLATT
3506 BANYAN CIR
MIAMI, FL 33133-5925

1210850090

SVEN L ETTENHEIM TRS
0 MUNROE DR
AMI, FL 33133-5932

0141210850100

THE KURZIM GROUP LLC
12855 SW 136TH AVE STE 203
MIAMI, FL 33186-5827

0141210850110

JAMES D KISHLAR
3505 WILDWOOD CIR
MIAMI, FL 33133-5919

1210850120

NIEL E GRAEFF &W
NEE A FRIGO
6 MAIN LODGE DR
AMI, FL 33133-5918

0141210850130

CAMP BISC HOMEOWNERS ASSN INC
3120 MUNROE DR
MIAMI, FL 33133-5917

0141210850140

RICHARD FAIRBANKS &W ANN
3505 MAIN LODGE DR
MIAMI, FL 33133-5918

1210850160

RTAC LLC
BAYSHORE DR TH 103
LAUDERDALE, FL 33304

0141210850170

FORTAC LLC
615 BAYSHORE DR TH 103
FT LAUDERDALE, FL 33304

0141210850180

ERNST SWIETELSKY
3080 MUNROE DR
MIAMI, FL 33133-5913

41213110001

:OVE GARDEN RESIDENCES
ONDO ASSOC., INC.
IRNARD SIEGEL – REGISTERED AGENT
17 N BAYSHORE DR, STE 102
'AMI, FL 33132

11213110030

:NTRO VACANZE USA INC
) BERNARD MAZZEO CPA
501 SW 128TH ST STE 103
AMI, FL 33186-5862

11213110060

:USEPPE LALLI
25 FRANKLIN AVE APT 402
AMI, FL 33133-5859

11213110090

IRRUP PROPERTIES INC
19 PERCIVAL AVE
AMI, FL 33133-4909

11213110120

:CA CAPITAL PARTNERS LLC
28 SW 22ND ST STE 900
AMI, FL 33145-2795

11213110150

IS M CARMONA &W LETICIA I
10 MAIN HWY 405
CONUT GROVE, FL 33133-5904

11213110180

ARK HICKS &
ARK TAYLOR HICKS
10 MAIN HWY # 406
AMI, FL 33133-5933

:1213110210

NYA PERGOLA
5 FRANKLIN AVE APT 407
AMI, FL 33133-5860

·1213110240

3GO INAMA
5 FRANKLIN AVE APT 408
AMI, FL 33133-5860

·1213110270

RLOS A MIGOYA
SE L MIGOYA(JTRS)
·0 MAIN HWY # 409
AMI, FL 33133-5933

0141213110010

DANIEL H MACMILLAN
3540 MAIN HWY
MIAMI, FL 33133-5933

0141213110040

GINO FALSETTO
3225 FRANKLIN AVE
MIAMI, FL 33133-5807

0141213110070

LANDMARK ESTATES LTD
3225 FRANKLIN AVE APT 203
MIAMI, FL 33133-5857

0141213110100

GUILLERMO ALVAREZ &W ADRIANA
3225 FRANKLIN AVE APT 204
MIAMI, FL 33133-5857

0141213110130

COLUMBUS CIRCLE LLC
407 LINCOLN RD STE 4C
MIAMI BEACH, FL 33139-3008

0141213110160

DENNIS R BEDARD
1717 N BAYSHORE DR STE 215
MIAMI, FL 33132-1196

0141213110190

RAYMOND H BAUR
1717 N BAYSHORE DR APT 2338
MIAMI, FL 33132-1160

0141213110220

GEORGE D PRIGMORE
3225 FRANKLIN AVE APT 208
MIAMI, FL 33133-5857

0141213110250

GIUSEPPE LALLI
3225 FRANKLIN AVE APT 209
MIAMI, FL 33133-5857

0141213110280

DONALD RAMIREZ
3225 FRANKLIN AVE APT 210
MIAMI, FL 33133-5857

0141213110020

LUTZ DEVELOPMENT CORP
1717 N BAYSHORE DR PH B56
MIAMI, FL 33132-1175

0141213110050

BRUNO MARCANO &W
ANNA M PASSARELLO
3225 FRANKLIN AVE APT 302
MIAMI, FL 33133-5857

0141213110080

ALBERTO IGNACIO SCHARFFENORTH
3540 MAIN HWY # 303
MIAMI, FL 33133-5933

0141213110110

GEO DAZ INVESTMENTS NO 3 LLC
3619 PERCIVAL AVE
MIAMI, FL 33133-4909

0141213110140

GREEFREY K CHARLES
3225 FRANKLIN AVE APT 305
MIAMI, FL 33133-5859

0141213110170

BRIAN SEVELAND
3225 FRANKLIN AVE APT 306
MIAMI, FL 33133-5859

0141213110200

GROVE RG INVESTMENT LLC
3225 FRANKLIN AVE APT 307
MIAMI, FL 33133-5859

0141213110230

ALLISON FREIDIN
3225 FRANKLIN AVE APT 308
MIAMI, FL 33133-5859

0141213110260

GERMAN RAMIREZ &W
MONICA GONZALEZ
3225 FRANKLIN AVE APT 309
MIAMI, FL 33133-5859

0141213110290

IRVING BARR TRS
3225 FRANKLIN AVE APT 310
MIAMI, FL 33133-5859

41210850190

CARDO TORRES &W DELIA
) BOX 162412
IAMI, FL 33116-2412

0141210850200

JOHN J KIM
SONIA H YOO
3100 MUNROE DR
MIAMI, FL 33133-5917

0141210850210

JAMES F HARRISON & JOSEPH III &
MUNROE DRIVE LLC
3120 MUNROE DR
MIAMI, FL 33133-5917

41210850220

MES HARRISON
20 MONROE DR
IAMI, FL 33133-5917

0141210850230

VICTORIA FRIGO (TR)
3130 MONROE DR
MIAMI, FL 33133-5917

0141210850250

PHILIP FREIDIN &W ELLEN C
3182 MUNROE DR
MIAMI, FL 33133-5917

41210850270

JCIA TAMES
80 MONROE DR
AMI, FL 33133-5917

41213110300

RUCE & DOROTHEA SANBORN
TAMARACK ST
AINT PAUL, MN 55115-1950

0141213110310

MARIO MARAZZI
ANGELO SCAUZILLO & EMILIO REGINA
3540 MAIN HWY # PH01
MIAMI, FL 33133-5933

0141213110320

ZEMPIRE LP
3225 FRANKLIN AVE UNIT PH02
MIAMI, FL 33133-5807

41213110330

AGDALENA FARIAS
25 FRANKLIN AVE UNIT 3
IAMI, FL 33133-5860

0141213110340

S HOWARD WITTELS
3225 FRANKLIN AVE UNIT 4
MIAMI, FL 33133-5860

0141213110350

LUTZ DEV CORP
1717 N BAYSHORE DR PH B56
MIAMI, FL 33132-1175

41213110360

JTZ DEVELOPMENT CORP
17 N BAYSHORE DR PH B56
IAMI, FL 33132-1175

0141213110370

GEORGE DANIEL PRIGMORE
3225 FRANKLIN AVE # PH07
MIAMI, FL 33133-5807

0141213110380

GINO FALSETTO
3540 MAIN HWY PH 8
MIAMI, FL 33133-5933

41213110390

HN M ANDREWS &W CHERYL
01 LA PLAYA BLVD
IAMI, FL 33133-6318

0141213110400

RAJESH KALWANI
3225 FRANKLIN AVE # VILLA
MIAMI, FL 33133-5807

0141213110410

EURO EXCHANGE SECURITIES UK LTD
1717 N BAYSHORE DR # 129
MIAMI, FL 33132-1180

41213110420

S EQUITY CORP
O ROZENCWAIG & FERRERO CARR LLP
1 HALLANDALE BLVD
LLANDALE BEACH, FL 33009

0141213110430

KIPEPEO LLC
C/O MICHAEL FALSETTO
1717 N BAYSHORE DR STE 102
MIAMI, FL 33132-1179

0141213110440

TAURUS COMMERCIAL LLC
1717 N BAYSHORE DR # 113
MIAMI, FL 33132-1180

41213110450

URUS COMMERCIAL LLC
17 N BAYSHORE DR # 113
AMI, FL 33132-1180

Attachment E

Restrictive Covenant Running with the Land in Favor of Miami-Dade County

RESTRICTIVE COVENANT RUNNING WITH THE LAND IN FAVOR OF MIAMI-DADE COUNTY

The undersigned, La Brisa, LLC, being the present owner(s) of the following real property (hereinafter called "the Property"), lying, being and situated in Miami-Dade County, Florida, to wit:

[Exhibit A]

pursuant to Section 24-48.2(I) (B) (2) (b) of the Code of Miami-Dade County, Florida hereby proffers this executed Restrictive Covenant Running With The Land in Favor of Miami-Dade County, Florida as part of Miami-Dade County Department of Regulatory and Economic Resources Class I Permit Application Number [2011-CLI-PER-00074]:

1. The owner covenants to Miami-Dade County that the mangrove areas shown on the plans entitled "DECKER BOAT NOTCH PROJECT 3551 Main Highway Miami, Florida 33133" prepared by Denis Solano P.E. 56902, signed and sealed on July 27, 2012 and attached hereto as Exhibit B and incorporated herein by reference, shall be considered "mitigation areas" and be preserved and managed so that the mitigation areas are not disturbed or removed, and shall remain free from invasive and exotic vegetation for the life of this Restrictive Covenant.

2. The permittee may trim mangrove and buttonwood tree branches to maintain access around the perimeter of the boat notch to no greater than 1 foot landward of the edge of the boat notch and no higher than 8 feet from the top of the seawall.

3. Top pruning of any mangroves or buttonwoods in the mitigation areas is prohibited.

4. The owner agrees to limit the mooring of vessels to the boat notch area.

5. For the purposes of this Restrictive Covenant, "vessel" is herein defined as any water craft designed to float or navigate on water, including, but not limited to: sailboats, powerboats, rowboats, ships, boats, skiffs, houseboats, and inflatable boats.

6. The owner covenants and represents that any and all persons holding a security interest of any kind whatsoever in the Property has been advised of, and has agreed to, the execution of this Covenant Running with the Land.

7. The owner shall notify Miami-Dade County in writing not later than thirty (30) days after any conveyance, sale, grant or transfer of the Property or any portion thereof, to any heirs, successors, assigns or grantees.

8. The undersigned agree(s) and covenant(s) that approval of this Restrictive Covenant neither authorizes nor constitutes a permit of any kind for work in wetlands or tidal waters at the Property.

9. This Restrictive Covenant shall run with the land and shall be recorded in the Public Records of Miami-Dade County, Florida and shall remain in full force and effect and be binding upon the undersigned, and their heirs, successors, grantees and assigns until such time as same is modified or released in writing by Miami-Dade County pursuant to the provisions of Section 24-48 of the Code of Miami-Dade County.

10. The Restrictive Covenant and the provisions contained herein may be enforced against any person permitting, allowing, letting, causing or suffering any violation of the terms of this Restrictive Covenant by the Department of Regulatory and Economic Resources, or its successor, by temporary, permanent, prohibitory, and mandatory injunctive relief as well as otherwise provided by law or ordinance and also may include an action for and to recover civil penalties, damages, costs and expenses, and attorney's fees in favor of Miami-Dade County against said person(s) as authorized by law or ordinance. All of the remedies provided herein shall be deemed to be independent and cumulative and shall be deemed to be supplemental to any remedies provided by law or ordinance.

11. No cancellation, revision, alteration or amendment of the Covenant shall be effective without prior approval from Miami-Dade County pursuant to the provisions of Section 24-48 of the Code of Miami-Dade County.

12. This Covenant is to run with the land and shall be binding on all parties and all persons claiming under it for a period of thirty (30) years after the date this Covenant is recorded, after which time it shall be extended automatically for successive periods of ten (10) years each, unless the Covenant is modified or released by Miami-Dade County.

13. This Restrictive Covenant supersedes the Restrictive Covenant previously recorded in Official Record Book 17295, Page 4811 to 4819, in the Public Records of Miami-Dade County, Florida.

IN WITNESS WHEREOF, the undersigned have caused this Covenant to be executed this 9 day of SEPTEMBER, 2012

Witnesses:

sign _____
print KIRK LOFGREN
sign _____
print CARLOS BOHN

Property Owner

sign _____
print SIMON DECKER
Title MANAGING MEMBER
Address 3551 MAIN HWY
MIAMI, FL 33133

STATE OF FLORIDA, COUNTY OF DADE

The foregoing instrument was acknowledged before me this 4th day of Sept, 2012. by Simon Decker. as Manager, who is personally known to me or who has produced _____ as identification and who did take an oath.

NOTARY PUBLIC:

sign _____
print Heidi Cid.
State of Florida at Large (Seal)
My Commission Expires:

HEIDI CID
Notary Public - State of Florida
My Comm. Expires Aug 20, 2013
Commission # DD 918819

RECEIVED

SEP 04 2012

DERM Coastal Resources Section
Natural Resources Regulation & Restoration
Division (NRRRD)

EXHIBIT A
LEGAL DESCRIPTION:

All that part of Lot 12 as shown on the Plat of a subdivision of Government Lot 1 (or the fractional SE 1/4) of Section 21 Township 54 South, Range 41 East, which lies Southeasterly of the New County Road, as now established, over, and across the most Northwesterly end thereof, according to the Plat thereof, as recorded in Deed Book D, Page 253, of the Public Records of Miami-Dade County, Florida.

Also all that part of Lots 1, 2, 13, and 14 of ROBERT'S SUBDIVISION OF THE NORTHEAST QUARTER OF THE SOUTHWEST QUARTER OF SECTION 21, TOWNSHIP 54 SOUTH, RANGE 41 EAST, according to the Plat thereof as recorded in Plat Book A, Page 21, of the Public Records of Miami-Dade County, Florida, lying Southeasterly of the County Road, except that part of Lots 13 and 14 conveyed to Paul C. Ransom by Deed, dated January 29, 1898, recorded in Deed Book M, Page 255, of the Public Records of Miami-Dade County, Florida;

Also all that certain lot, tract or parcel of land lying and being in the County of Miami-Dade and State of Florida, and described as follows:
Beginning 208 feet North of the Southeast corner of the Northeast Quarter of the Southwest Quarter of Section 21, Township 54 South, Range 41 East, and running thence West 17 feet to the Southeast side of the New County Road; thence Northeasterly along the same 25 feet; and thence South 15 feet, more or less, to the Place of Beginning, being in the Southwest Quarter of said Section 21.

A/K/A 3551 MAIN HIGHWAY COCONUT GROVE, FL 33133

DECKER BOAT NOTCH PROJECT

Exhibit B

SHEET INDEX

G-1	LOCATION & EXISTING CONDITIONS
S-1	GENERAL NOTES
S-2	DEMOLITION SECTION VIEWS
S-3	MANGROVE TRANSPLANT PLAN
S-3A	MITIGATION AREAS - POST-CONSTRUCTION
S-4	EXCAVATED MATERIAL DISPOSAL PLAN
S-5	NEW BULKHEAD PLAN
S-6	NEW BULKHEAD SECTION & DETAILS
S-7	NEW BULKHEAD CONNECTION DETAILS
S-8	NEW OVER LAND WALKWAYS PLAN
S-9	NEW OVER LAND WALKWAYS SECTIONS
S-10	PROPOSED SLIP LAYOUT & LAUNCH RAMP

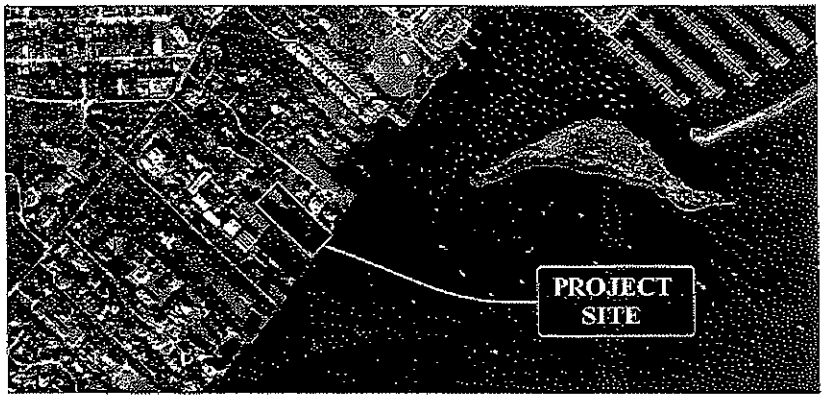

KEY MAP
SCALE: NTS

LOCATION:
3551 MAIN HIGHWAY
MIAMI, FLORIDA 33133

LAT/LONG:
25 DEG 43'21.73"N / 80 DEG 14'34.57"W

LEGAL DESCRIPTION:
21 54 41 BEG SE COR OF NE1/4 OF SW1/4 N ALG E/L OF NE1/4 OF SW1/4 TO INTER WITH SELY/L OF MAIN HWY & POB NELY ALG SELY/L OF INGRAHAM HWY TO ITS INTER WITH ELY/L OF

RECEIVED
JUL 29 2012
DERM Coastal Resources Section
Natural Resources Regulation & Restoration
Division (NSRRD)

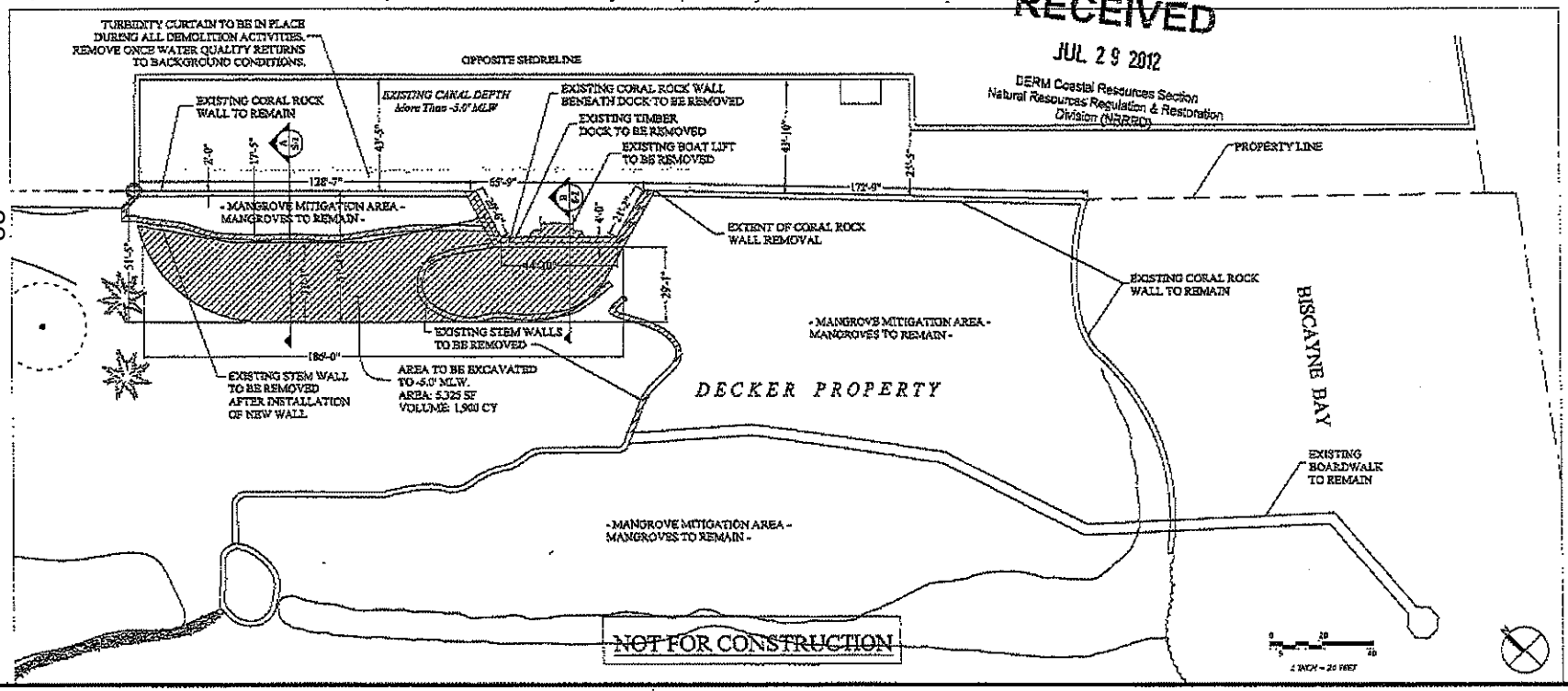

DECKER BOAT NOTCH PROJECT
3551 Main Highway
Miami, Florida 33133

CLIENT:
LA BRISA, LLC
C/O SIMON DECKER
3551 Main Highway
Miami, Florida 33133

ENVIRONMENTAL CONSULTANT:
OCEAN CONSULTING, LLC
340 Minorca Avenue, Suite 5
Coral Gables, Florida 33134
Tel: (305) 921-9544
Fax: (305) 677-3254

SOLVER STRUCTURAL PARTNERSHIP, INC.
7500 NW 25 St., Suite 212
Miami, FL 33122
Tel: (305) 592-9396
Fax: (305) 591-3447

07/27/12
Denis Solver
PE 56902, SI 2046, CDA 9095

PERMIT SKETCH

Issue #	Issue Date
5	April 2, 2012
6	April 30, 2012
7	June 19, 2012
8	July 2, 2012

PROJECT: 10-1275

LOCATION & EXISTING CONDITIONS

SCALE : AS SHOWN
SHEET NO.
G-1

GENERAL NOTES:

1. THE WORK CONSISTS OF FURNISHING ALL CONSTRUCTION, LABOR, EQUIPMENT AND MATERIALS AND PERFORMING ALL OPERATIONS IN CONNECTION WITH CONSTRUCTION OF BULKHEAD, TIMBER DECK, MANGROVE TRANSPLANT, AND REVETMENT IMPROVEMENTS AS SHOWN ON THESE DRAWINGS AND SPECIFIED IN THE CONTRACT DOCUMENTS.
2. THE CONTRACTOR SHALL ABIDE BY ALL NOTES AND CONDITIONS INDICATED ON THE CONSTRUCTION PLANS AND PERMITS. IF THE CONTRACTOR VIOLATES ANY CONDITION OF THE PERMIT AND WORK IS STOPPED BY THE STATE OR OTHER PUBLIC ENTITY, THEN ANY ADDITIONAL COSTS INCURRED BY THE CONTRACTOR SHALL BE PAID BY THE CONTRACTOR AND NOT CHARGED TO THE OWNER.
3. THE CONTRACTOR IS RESPONSIBLE FOR OBTAINING ALL LOCAL PERMITS NECESSARY FOR THIS WORK. A PRECONSTRUCTION MEETING WILL BE HELD ON SITE TO VERIFY DETAILS AND METHODS OF CONSTRUCTION.
4. CONTRACTOR IS RESPONSIBLE FOR LOCATING ALL UNDERGROUND UTILITIES PRIOR TO CONSTRUCTION.
5. CONTRACTOR IS RESPONSIBLE FOR COORDINATING WITH OTHER UPLAND CONTRACTORS ON SITE.
6. CONTRACTOR IS RESPONSIBLE FOR OBTAINING ALL ENVIRONMENTAL PERMITS FOR THE PROJECT. A COPY WILL BE PROVIDED TO THE CONTRACTOR, AND THE CONTRACTOR SHALL ABIDE BY ALL REGULATIONS AND PERMIT CONDITIONS.
7. CONTRACTOR IS REQUIRED TO INSTALL A TURBIDITY CURTAIN ACCORDING TO PLAN AND NOTES.
8. ANY DISCREPANCIES IN THE PLANS WITH FIELD CONDITIONS SHALL BE BROUGHT TO THE IMMEDIATE ATTENTION OF THE ENGINEER. CONSTRUCTION SHALL NOT CONTINUE UNTIL THE ENGINEER HAS ADDRESSED THE DISCREPANCIES.

DEMOLITION NOTES:

1. THE CONTRACTOR SHALL TAKE ALL NECESSARY PRECAUTIONS TO STRICTLY CONTAIN THE DEMOLITION WITHIN THE LIMITS OF THE REQUIRED CONSTRUCTION AND AVOID ANY DAMAGE TO THE EXISTING STRUCTURE.
2. PRIOR TO GENERAL DEMOLITION, THE CONTRACTOR SHALL SAWCUT WHERE NOTED OR OTHERWISE PROVIDE A SMOOTH CLEAN BREAK FROM ALL CONNECTING LINKS TO THE REMAINING STRUCTURE.
3. ANY DAMAGE INCURRED IN EXECUTION OF THIS CONTRACT TO ANY PART OF THE PROPERTY/STRUCTURE NOT SPECIFICALLY DESIGNATED FOR DEMOLITION SHALL BE REPAIRED, REPLACED, AND/OR RECONSTRUCTED BY THE CONTRACTOR TO ITS ORIGINAL CONDITION AT HIS EXPENSE.
4. THE CONTRACTOR SHALL USE METHODS OR PROCEDURES DEEMED APPROPRIATE FOR THE PRESCRIBED WORK. EXISTING STRUCTURES AND/OR COMPONENTS TEMPORARILY REMOVED TO FACILITATE SUCH WORK SHALL BE REPAIRED, RESTORED, AND/OR RECONSTRUCTED AS NOTED ABOVE.
5. ALL DEMOLISHED MATERIAL, EXCEPT AS NOTED, BECOMES THE PROPERTY OF AND SHALL BE COMPLETELY REMOVED AND DISPOSED OF BY THE CONTRACTOR. THE REMOVAL, HANDLING, AND DISPOSAL OF ALL DEMOLITION MATERIALS SHALL BE IN STRICT ACCORDANCE WITH ALL STATE AND FEDERAL REQUIREMENTS.

CONCRETE NOTES:

1. ALL CONCRETE MATERIALS, REINFORCEMENT, AND CONSTRUCTION SHALL BE IN ACCORDANCE WITH FDOT SPECIFICATION 346, 400, AND 415 EXCEPT AS NOTED.
2. PROVIDE CHAMFERS ON ALL EXPOSED EDGES AND CORNERS EXCEPT AS OTHERWISE NOTED.
3. CONSTRUCTION JOINTS WILL BE PERMITTED ONLY AT THE LOCATIONS INDICATED ON THE PLANS. ADDITIONAL CONSTRUCTION JOINTS OR ALTERATIONS TO THOSE SHOWN WILL REQUIRE APPROVAL BY THE ENGINEER.
4. REINFORCEMENT SHALL BE ASTM A615, GRADE 60.
5. ALL DIMENSIONS PERTAINING TO LOCATION OF REINFORCING ARE TO CENTER LINE OF BARS EXCEPT WHERE THE CLEAR DIMENSION IS SHOWN TO FACE OF CONCRETE.
6. NO CHAIRS OR OTHER METAL SHALL PROTRUDE FROM SURFACE OF CONCRETE.
7. MINIMUM CONCRETE COVER SHALL BE 3" TO OUTSIDE OF BAR.
8. ALL CAST-IN-PLACE CONCRETE TO BE A MINIMUM OF 5000 PSI COMPRESSIVE STRENGTH AT 28 DAYS WITH A MAX W/C RATIO OF 0.4.
9. PROVIDE MIX DESIGN FOR A CLASS IV CONCRETE FOR AN EXTREMELY AGGRESSIVE (MARINE) ENVIRONMENT IN ACCORDANCE WITH FDOT SPECIFICATIONS. PROVIDE SUFFICIENT AMOUNT OF FLY ASH, MICROSILICA, OR SLAG TO THE CEMENT CONTENT TO INCREASE IMPERMEABILITY OF CONCRETE.
10. CURE PLACED CONCRETE IN ACCORDANCE WITH FDOT SPECIFICATION 400-16.1.
11. PROVIDE ADHESIVE BONDED DOWELS IN ACCORDANCE WITH FDOT SECTION 416.
12. COAT CONCRETE CAP WITH THOROCOAT IN ACCORDANCE WITH MANUFACTURERS INSTRUCTIONS. PROVIDE COARSE FINISH, OWNER TO SPECIFY COLOR.

LAYOUT AND TESTING:

1. ALL CONSTRUCTION STAKEOUT SHALL BE PERFORMED BY AND PAID FOR BY THE CONTRACTOR UNDER THE SUPERVISION OF A FLORIDA REGISTERED SURVEYOR.
2. ALL TESTING AND INSPECTION FOR CONCRETE MATERIALS SHALL BE IN ACCORDANCE WITH FDOT SPECIFICATIONS, AND SHALL BE PERFORMED BY AN INDEPENDENT TESTING LABORATORY PROVIDED BY THE OWNER.
3. CONTRACTOR SHALL PROVIDE THE ENGINEER WITH A SET OF AS-BUILT DRAWINGS IN SUFFICIENT DETAILS TO ILLUSTRATE THE HORIZONTAL AND VERTICAL COMPONENTS OF ABOVE AND BELOW GROUND STRUCTURES AND WALLS RELATIVE TO THE CONSTRUCTION BASELINE.

SHOP DRAWINGS:

PROVIDE SHOP DRAWINGS AND/OR CATALOG CUTS FOR THE FOLLOWING ITEMS FOR REVIEW AND APPROVAL BY THE ENGINEER PRIOR TO CONSTRUCTION:

A. DEMOLITION METHODS AND DISPOSAL PLAN
B. CONCRETE MIX DESIGNS FOR CAST-IN-PLACE CONCRETE
C. CURING COMPOUND (IF APPLICABLE)
D. REINFORCING STEEL
E. PILE DRIVING MEANS AND METHODS INCLUDING PILE HAMMER DATA
F. FORMWORK
G. SCHEDULE FOR COMPLETION OF WORK WITH TASKS AND DURATIONS DEFINED
H. SHEET PILING
I. EXPANSION JOINT MATERIALS
J. COATING

RECEIVED
JUL 29 2012
DERM Coastal Resources Section
Natural Resources Regulation & Restoration
Division (NRRRD)

SHEET PILING NOTES:

1. STEEL SHEET PILING SHALL BE OF THE SECTIONS INDICATED, AND SHALL BE ASTM A572 GRADE 50.
2. SHEET PILING SHALL BE COATED WITH TNEMEC TAR (46H-413) COAL TAR EPOXY: TOP 20', BOTH SIDES EXCEPT AS NOTED.
3. COATING SHALL BE 16 MILS DRY FILM THICKNESS, AND APPLIED IN STRICT ACCORDANCE WITH MANUFACTURER INSTRUCTIONS.
4. DRIVE SHEET PILING IN ACCORDANCE WITH FDOT 455-9.
5. CONTRACTOR SHALL BE PREPARED TO DRIVE SHEET PILING THROUGH LIMESTONE LAYERS: REFER TO GEOTECHNICAL REPORT.
6. ANY DAMAGED COATING DUE TO HANDLING, DRIVING, ETC, SHALL BE REPAIRED IN STRICT ACCORDANCE WITH COATING MANUFACTURER INSTRUCTIONS.

TURBIDITY CURTAIN NOTES:

1. TURBIDITY CURTAIN TO BE INSTALLED AS SHOWN, PRIOR TO CONSTRUCTION.
2. TURBIDITY CURTAIN SHALL BE TYPE I OR EQUIVALENT.
3. THE TURBIDITY CURTAIN SHALL BE SECURED TO THE BULKHEAD ON EITHER SIDE OF THE CONSTRUCTION AREA AND FREE OF ANY GAPS.
4. TURBIDITY CURTAIN TO BE LOCATED OUTSIDE OF ANY NAVIGABLE CHANNEL.
5. TURBIDITY CURTAIN TO AVOID ALL PROTECTED SEAGRASS AREAS.

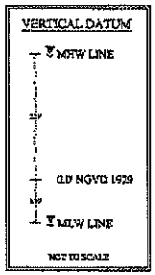

NOT FOR CONSTRUCTION

DECKER BOAT NOTCH PROJECT
3551 Main Highway
Miami, Florida 33133

CLIENT:
LA BRISA, LLC
C/O SIMON DECKER
3551 Main Highway
Miami, Florida 33133

ENVIRONMENTAL CONSULTANT:
OCEAN CONSULTING, LLC
340 Minorca Avenue, Suite 5
Coral Gables, Florida 33134
Tel: (305) 921-9344
Fax: (305) 677-2254

SOLVER STRUCTURAL PARTNERSHIP, INC.
7500 NW 25 St., Suite 212
Miami, FL 33122
Tel: (305) 592-9396
Fax: (305) 591-3447

05/27/12
Denis Solano
PE 56902, SI 2046, COA 8096

PERMIT SKETCH

Issue #	Issue Date
5	April 2, 2012
6	April 30, 2012
7	June 19, 2012
8	July 2, 2012

PROJECT: 10-1275

GENERAL NOTES

SCALE : AS SHOWN
SHEET NO.
S-1

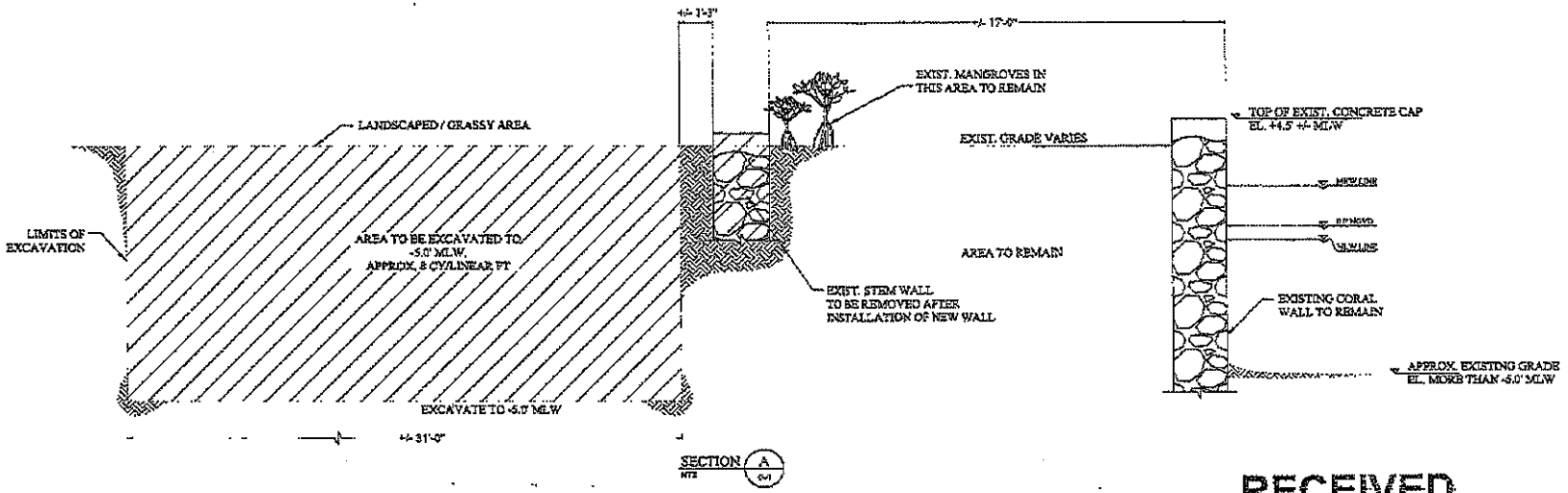

TOTAL VOLUME OF EXCAVATED MATERIAL = 1,900 CU. YDS.
TOTAL AREA OF EXCAVATED MATERIAL = 5,325 SQ. FT.

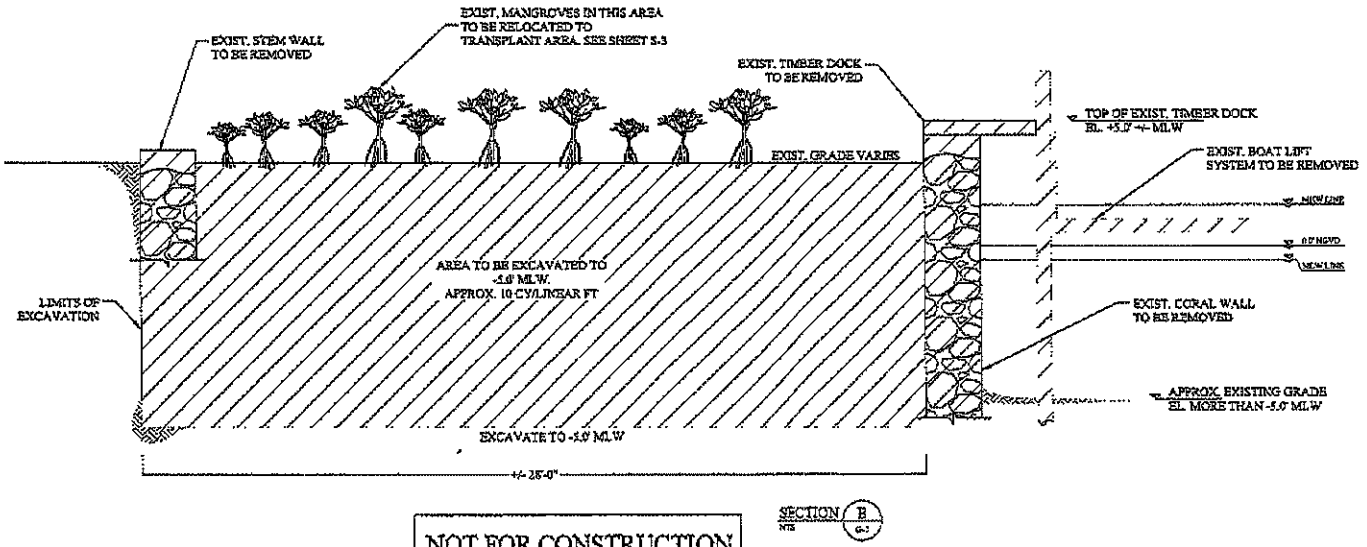

NOT FOR CONSTRUCTION

RECEIVED
JUL 29 2012
DERM Coastal Resources Section
Natural Resources Regulation & Restoration
Division (NRRRD)

DECKER BOAT NOTCH PROJECT

3551 Main Highway
Miami, Florida 33133

CLIENT:
LA ERISA, LLC
C/O SIMON DECKER
3551 Main Highway
Miami, Florida 33133

ENVIRONMENTAL CONSULTANT:
OCEAN CONSULTING, LLC
340 Minorca Avenue, Suite 5
Coral Gables, Florida 33134
Tel: (305) 921-9344
Fax: (305) 677-3254

SOLVER STRUCTURAL PARTNERSHIP, INC.
7500 NW 25 St., Suite 212
Miami, FL 33122
Tel: (305) 592-9396
Fax: (305) 591-5447

07/27/12
Denis Solano
PE 56502, ST 2046, COA 9095

PERMIT SKETCH

Issue #	Issue Date
(5)	April 2, 2012
(6)	April 30, 2012
(7)	June 19, 2012
(8)	July 2, 2012

PROJECT: 10-1275

DEMOLITION SECTION VIEWS

SCALE : AS SHOWN
SHEET NO.

S-2

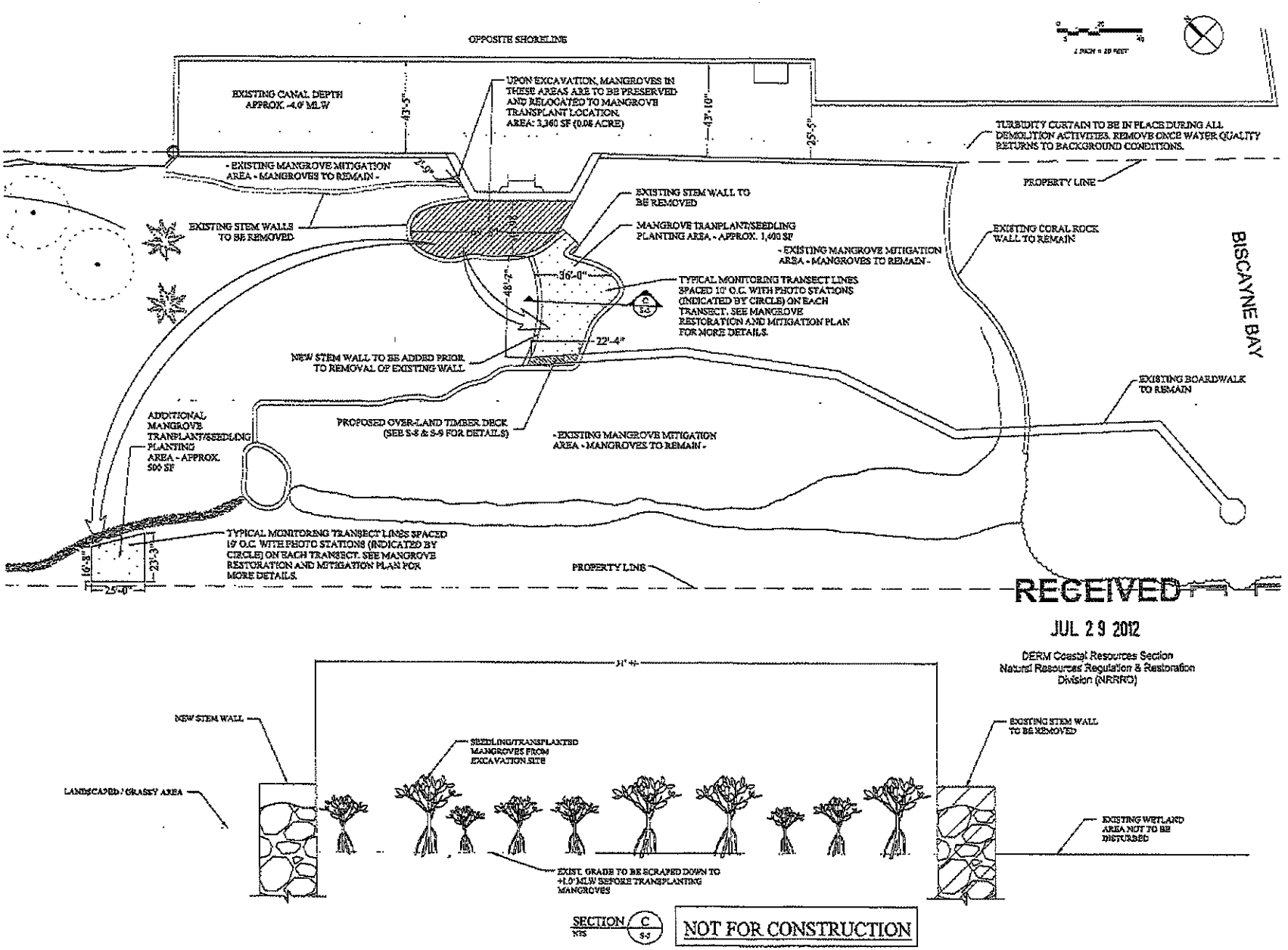

41

RECEIVED
JUL 29 2012
DERM Coastal Resources Section
Natural Resources Regulation & Restoration Division (NRRRD)

DECKER BOAT NOTCH PROJECT
3551 Main Highway
Miami, Florida 33133

CLIENT:
LA BRISA, LLC
C/O SIMON DECKER
3551 Main Highway
Miami, Florida 33133

ENVIRONMENTAL CONSULTANT:
OCEAN CONSULTING, LLC
340 Minorca Avenue, Suite 5
Coral Gables, Florida 33134
Tel: (305) 921-9344
Fax: (305) 677-5254

SOLVER STRUCTURAL PARTNERSHIP, INC.
7500 NW 25 St., Suite 212
Miami, FL 33122
Tel: (305) 592-9396
Fax: (305) 591-3447

07/27/12
Denis Solano
PE 56902, St 2046, COA 9095

PERMIT SKETCH

Issue #	Issue Date
⑤	April 2, 2012
⑥	April 30, 2012
⑦	June 19, 2012
⑧	July 2, 2012

PROJECT: 10-1275

MANGROVE TRANSPLANT PLAN

SCALE : AS SHOWN

SHEET NO.
S-3

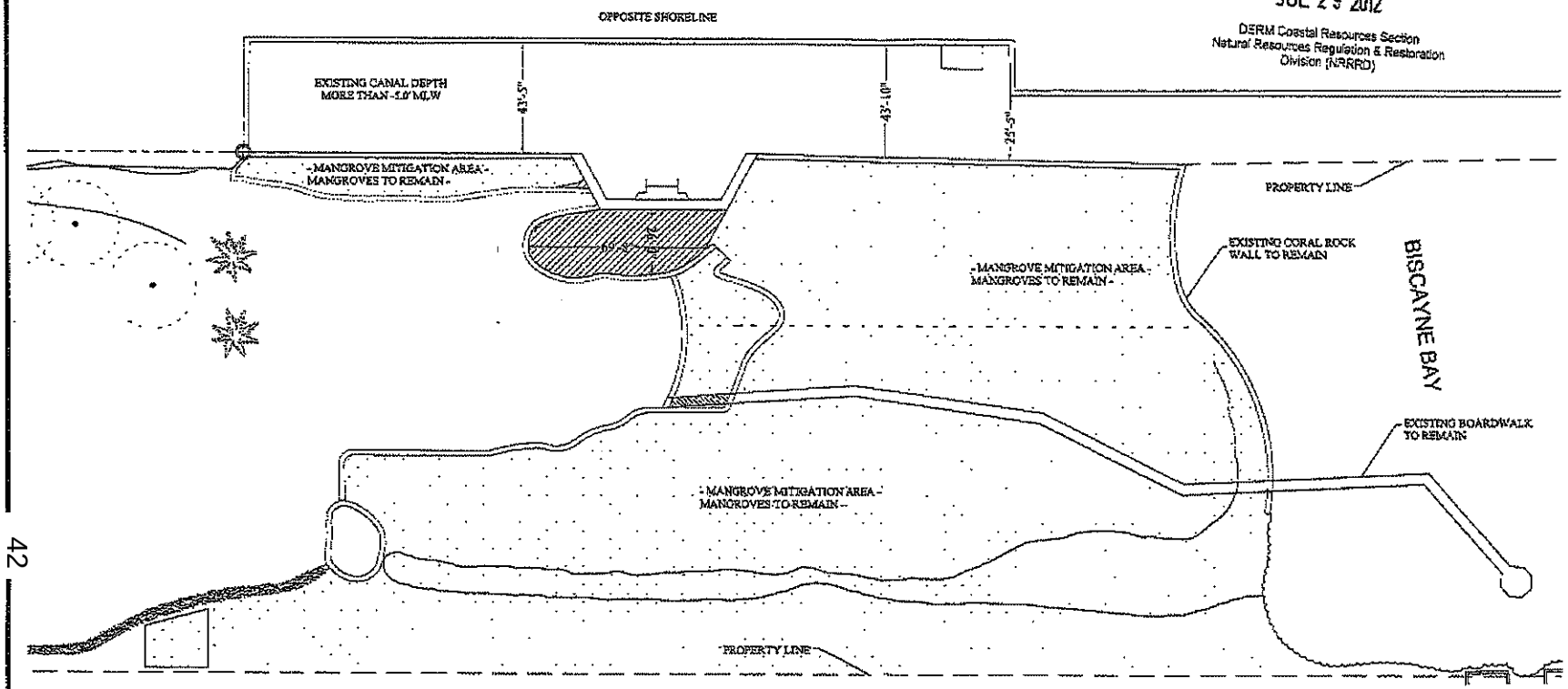

RECEIVED
JUL 29 2012
DERM Coastal Resources Section
Natural Resources Regulation & Restoration
Division (NRRRD)

NOT FOR CONSTRUCTION

DECKER BOAT NOTCH PROJECT
3551 Main Highway
Miami, Florida 33133

CLIENT:
LA BRISA, LLC
C/O SIMON DECKER
3551 Main Highway
Miami, Florida 33133

ENVIRONMENTAL CONSULTANT:
OCEAN CONSULTING, LLC
340 Minorca Avenue, Suite 5
Coral Gables, Florida 33134
Tel: (305) 921-9344
Fax: (305) 677-3254

SOLVER STRUCTURAL PARTNERSHIP, INC.
7500 NW 25 St., Suite 212
Miami, FL 33122
Tel: (305) 592-9396
Fax: (305) 591-3447

07/27/12
Denis Solano
PE 56902, SI 2046, COA 5095

PERMIT SKETCH

Issue #	Issue Date
5	April 2, 2012
6	April 30, 2012
7	June 19, 2012
8	July 2, 2012

PROJECT: 10-1275

MANGROVE MITIGATION AREAS - POST-CONSTRUCTION
SCALE : AS SHOWN
SHEET NO.
S-3A

RECEIVED
JUL 29 2012
DERM Coastal Resources Section
Natural Resources Regulation & Restoration
Division (NRRRD)

EXCAVATED MATERIAL MANAGEMENT PLAN:

1. ALL EXCAVATED MATERIAL TO REMAIN ON THE DECKER PROPERTY.
2. EXCAVATED MATERIAL TO BE KEPT IN WATER-TIGHT CONTAINERS AS IT IS TRANSPORTED BY TRUCK TO SPECIFIED DEPOSITION AREA. NOTE MATERIAL IS NOT EXPECTED TO BE OVERLY DAMP SINCE THIS IS A LANDWARD EXCAVATION.
3. A 400 SQ. FT. DEPRESSION APPROX. 600 FT FROM THE DELINEATED WETLAND AREAS HAS BEEN SELECTED AS THE DEPOSITION AREA. IT IS WITHIN THE BOUNDARIES OF THE DECKER PROPERTY AND IS 650 FT. FROM THE CLOSEST BODY OF WATER.
4. A HAY BALE BERM WILL SURROUND THE EXCAVATED MATERIAL ONCE IT IS IN ITS PROPOSED DEPOSITION AREA. THE BERM WILL BE REMOVED ONCE THE EXCAVATED MATERIAL IS DRY.
5. THE DEPOSITION AREA WILL BE LANDSCAPED TO MATCH THE REMAINDER OF THE DECKER PROPERTY.

NOT FOR CONSTRUCTION

DECKER BOAT NOTCH PROJECT
3551 Main Highway
Miami, Florida 33133

CLIENT:
LA BRISA, LLC
C/O SIMON DECKER
3551 Main Highway
Miami, Florida 33133

ENVIRONMENTAL CONSULTANT:
OCEAN CONSULTING, LLC
340 Minorca Avenue, Suite 5
Coral Gables, Florida 33134
Tel: (305) 921-9344
Fax: (305) 677-3254

SOLVER STRUCTURAL PARTNERSHIP, INC.
7500 NW 25 St., Suite 212
Miami, FL 33122
Tel: (305) 592-9396
Fax: (305) 591-5447

07/27/12
Denis Solano
PE 56900, ST 2046, CDA 9095

PERMIT SKETCH

Issue #	Issue Date
⑤	April 2, 2012
⑥	April 30, 2012
⑦	June 19, 2012
⑧	July 2, 2012

PROJECT: 10-1275

EXCAVATED MATERIAL DISPOSAL PLAN

SCALE : AS SHOWN
SHEET NO.
S-4

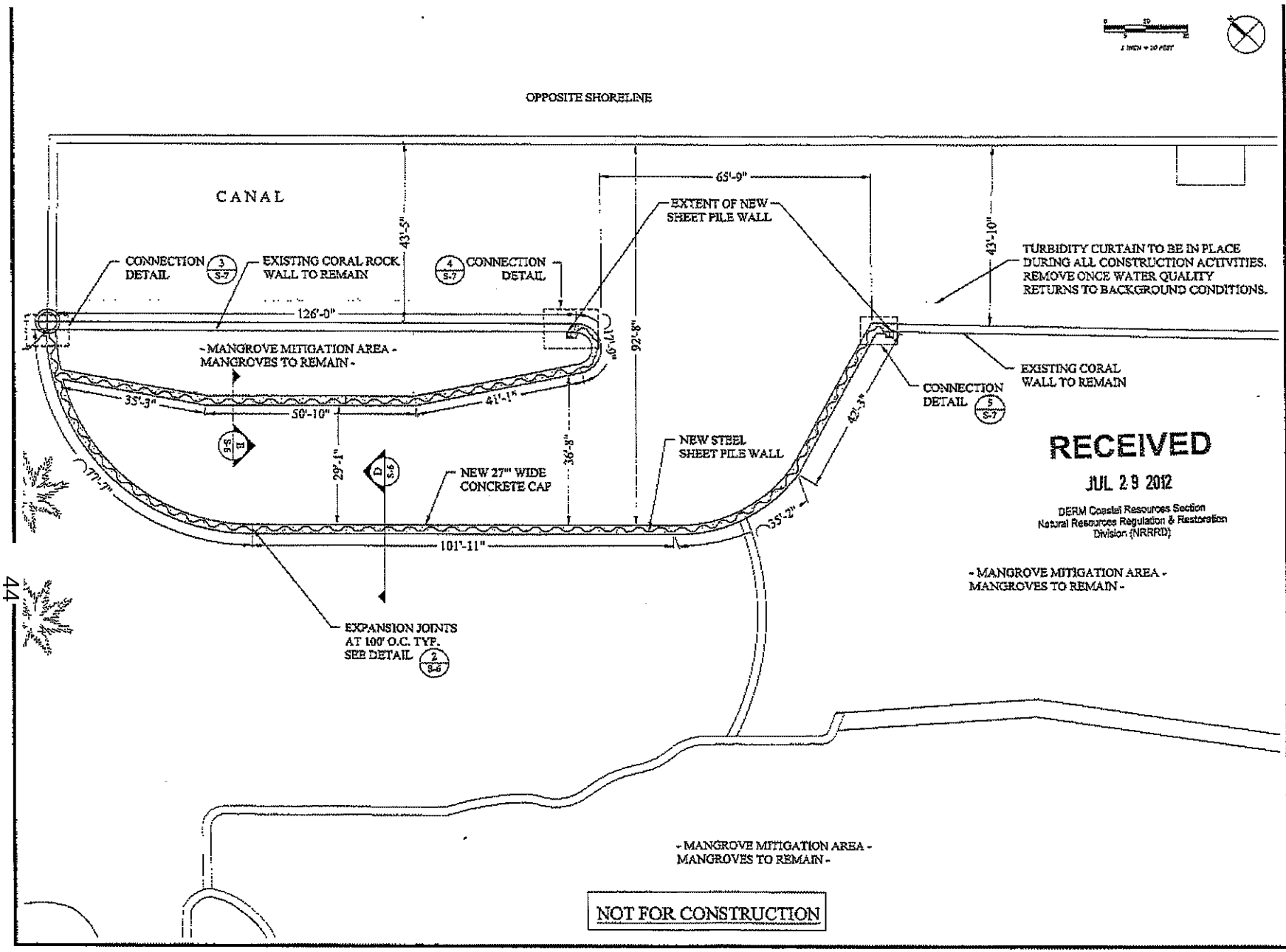

RECEIVED
JUL 29 2012
DERM Coastal Resources Section
Natural Resources Regulation & Restoration Division (NRRRD)

DECKER BOAT NOTCH PROJECT
3551 Main Highway
Miami, Florida 33133

CLIENT:
LA BRISA, LLC
C/O SIMON DECKER
3551 Main Highway
Miami, Florida 33133

ENVIRONMENTAL CONSULTANT:
OCEAN CONSULTING, LLC
340 Minorca Avenue, Suite 5
Coral Gables, Florida 33134
Tel: (305) 921-9344
Fax: (305) 677-3254

SOLVER STRUCTURAL PARTNERSHIP, INC.
7500 NW 25 St., Suite 212
Miami, FL 33122
Tel: (305) 592-9896
Fax: (305) 591-3447

07/23/12
Denis Solano
PE 59902, SI 2045, COA 9095

PERMIT SKETCH

Issue #	Issue Date
5	April 2, 2012
6	April 30, 2012
7	June 19, 2012
8	July 2, 2012

PROJECT: 10-1273

NEW BULKHEAD PLAN

SCALE : AS SHOWN

SHEET NO.
S-5

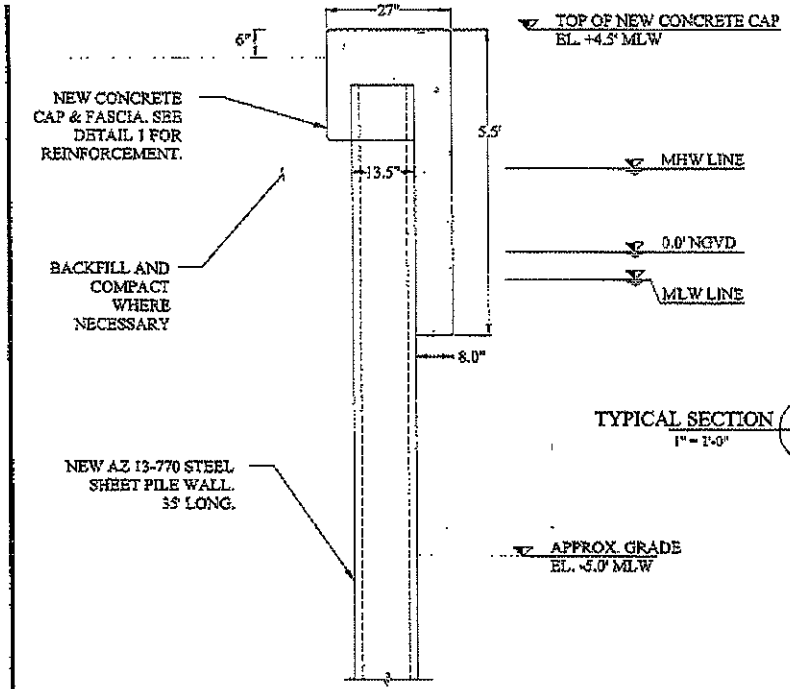

TYPICAL SECTION D
1" = 1'-0"
S-5

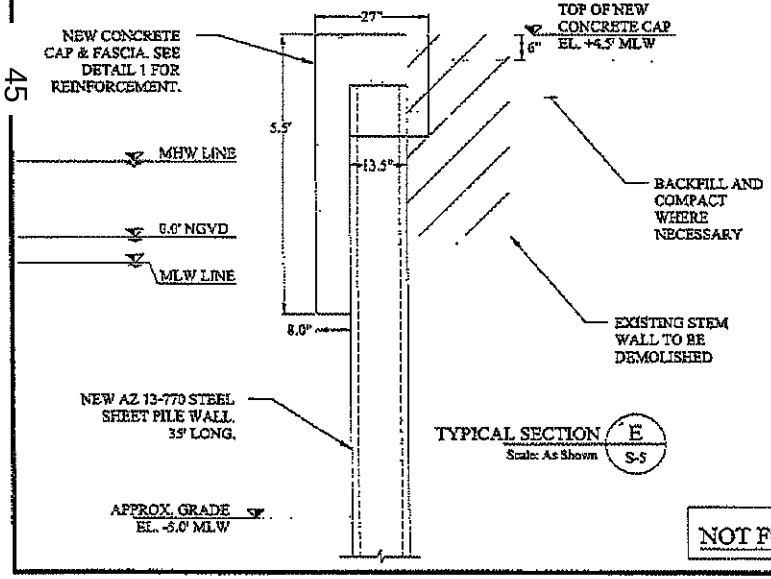

TYPICAL SECTION E
Scale: As Shown
S-5

RECEIVED
JUL 29 2012
DERM Coastal Resources Section
Natural Resources Regulation & Restoration
Division (NRRRD)

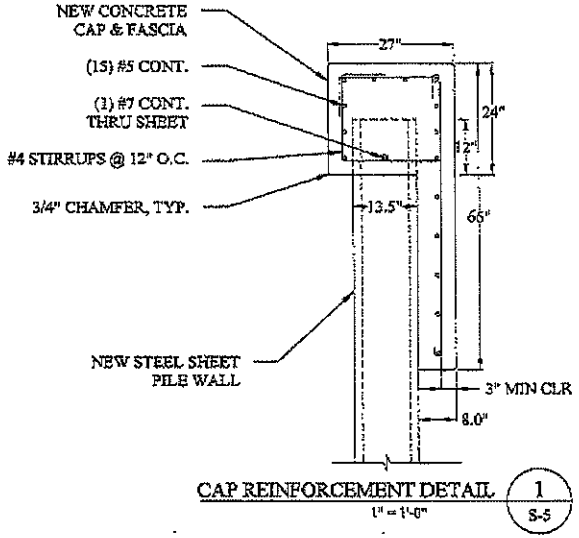

CAP REINFORCEMENT DETAIL 1
1" = 1'-0"
S-5

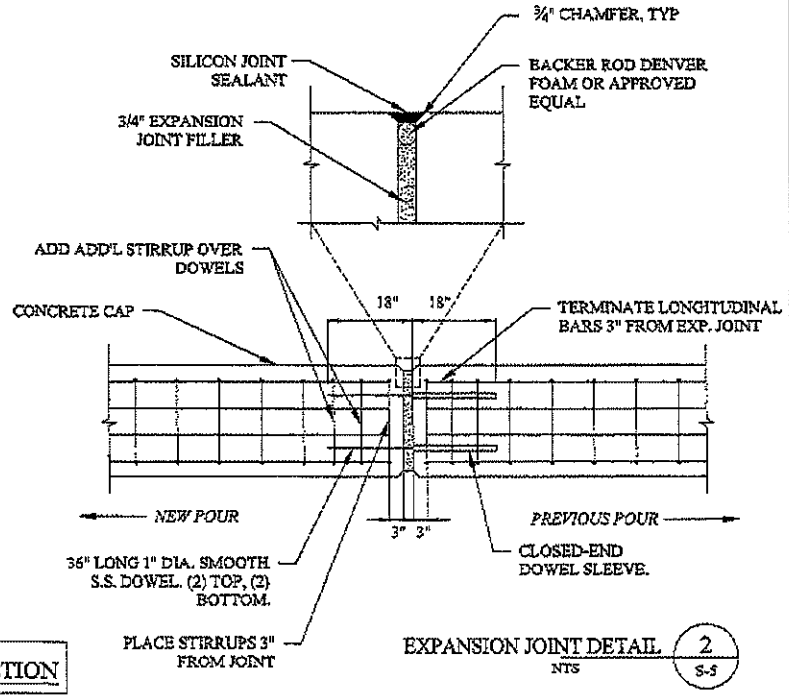

EXPANSION JOINT DETAIL 2
NTS
S-5

NOT FOR CONSTRUCTION

DECKER BOAT NOTCH PROJECT
3551 Main Highway
Miami, Florida 33133

CLIENT:
LA BRISA, LLC
C/O SIMON DECKER
3551 Main Highway
Miami, Florida 33133

ENVIRONMENTAL CONSULTANT:
OCEAN CONSULTING, LLC
340 Minorca Avenue, Suite 5
Coral Gables, Florida 33134
Tel: (305) 921-9344
Fax: (305) 677-3254

SOLVER STRUCTURAL PARTNERSHIP, INC.
7500 NW 25 St., Suite 212
Miami, FL 33122
Tel: (305) 592-9396
Fax: (305) 591-3447

07/27/12
Denis Solano
PE 56902, SI 2046, COA 5095

PERMIT SKETCH

Issue #	Issue Date
5	April 2, 2012
6	April 30, 2012
7	June 19, 2012
8	July 2, 2012

PROJECT: 10-1275

NEW BULKHEAD SECTION & DETAILS

SCALE : AS SHOWN
SHEET NO.
S-6

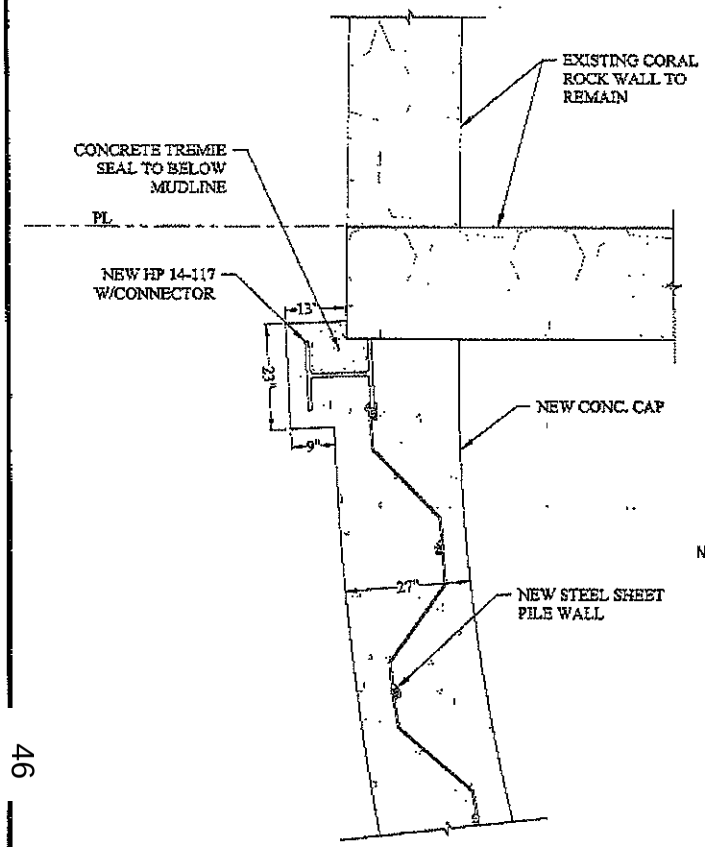

CONNECTION DETAIL 3 / S-5
1" = 1'-0"

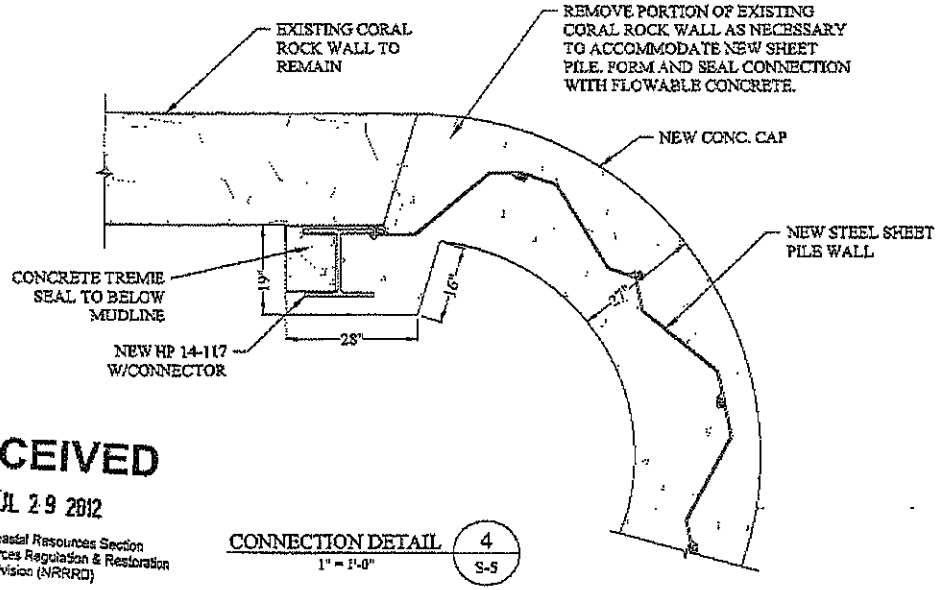

CONNECTION DETAIL 4 / S-5
1" = 1'-0"

RECEIVED
JUL 29 2012
DERM Coastal Resources Section
Natural Resources Regulation & Restoration
Division (NRRRD)

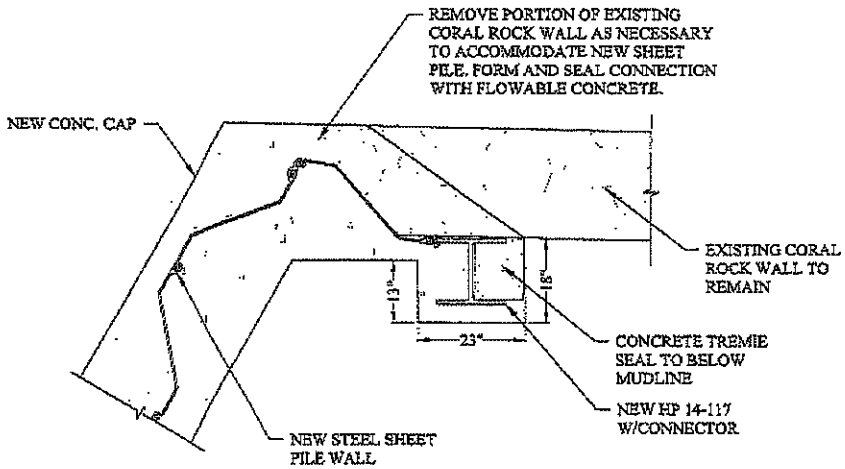

CONNECTION DETAIL 5 / S-5
1" = 1'-0"

NOT FOR CONSTRUCTION

DECKER BOAT NOTCH PROJECT
3551 Main Highway
Miami, Florida 33133

CLIENT:
LA BRISA, LLC
C/O SIMON DECKER
3551 Main Highway
Miami, Florida 33133

ENVIRONMENTAL CONSULTANT:
OCEAN CONSULTING, LLC
340 Minorca Avenue, Suite 5
Coral Gables, Florida 33134
Tel: (305) 921-9344
Fax: (305) 677-3254

SOLVER STRUCTURAL PARTNERSHIP, INC.
7500 NW 25 St., Suite 212
Miami, FL 33122
Tel: (305) 592-9396
Fax: (305) 591-3447

07/27/12
Dania Solver
PE 56902, St 2046, COA 9095

PERMIT SKETCH

Issue #	Issue Date
5	April 2, 2012
6	April 30, 2012
7	June 19, 2012
8	July 2, 2012

PROJECT: 10-1275

NEW BULKHEAD CONNECTION DETAILS

SCALE : AS SHOWN
SHEET NO.
S-7

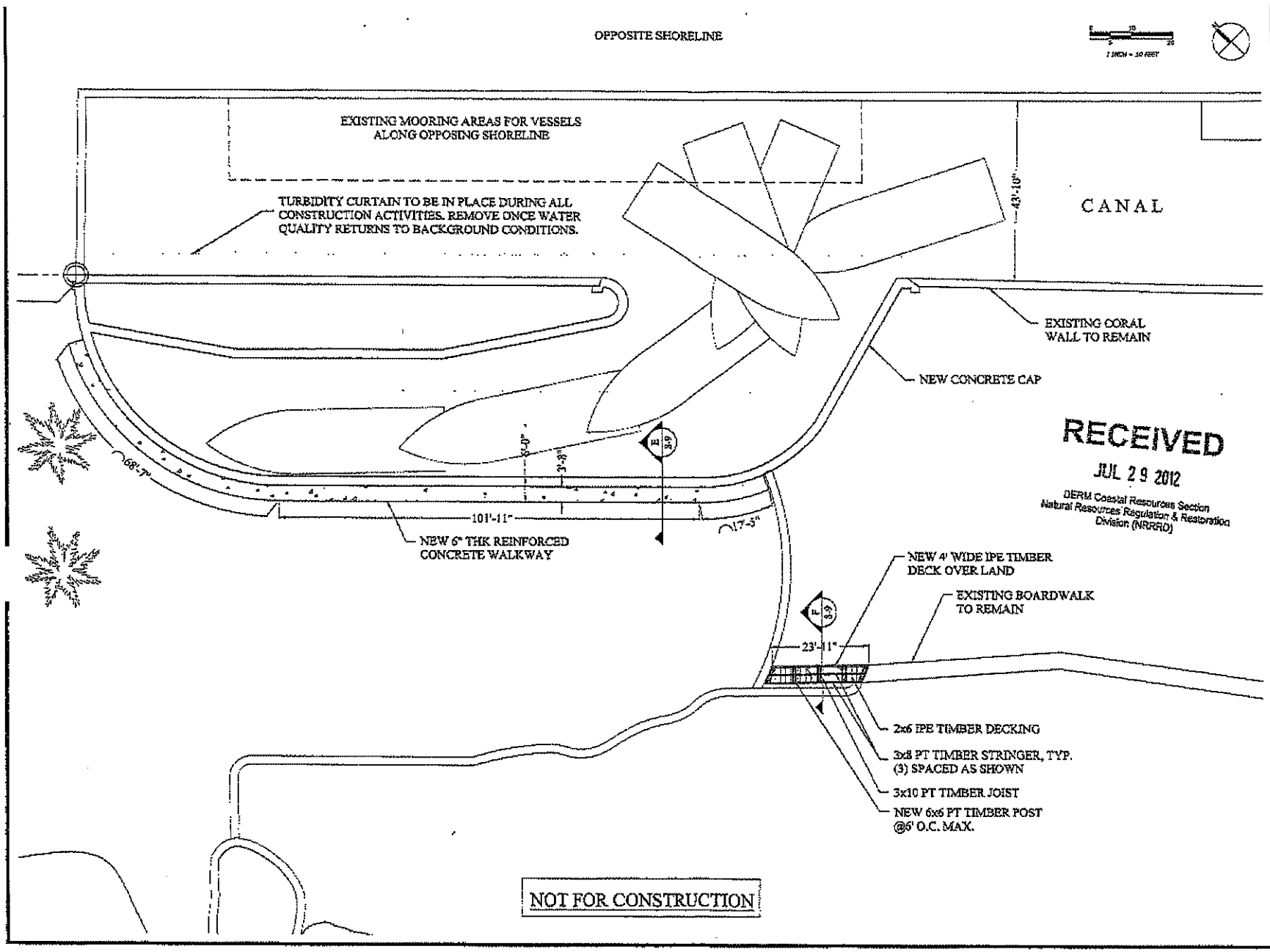

RECEIVED
JUL 29 2012
DERM Coastal Resources Section
Natural Resources Regulation & Restoration Division (NRRRD)

DECKER BOAT NOTCH PROJECT
3551 Main Highway
Miami, Florida 33133

CLIENT:
LA BRISA, LLC
C/O SIMON DECKER
3551 Main Highway
Miami, Florida 33133

ENVIRONMENTAL CONSULTANT:
OCEAN CONSULTING, LLC
340 Minorca Avenue, Suite 5
Coral Gables, Florida 33134
Tel: (305) 921-9344
Fax: (305) 677-3254

SOLVER STRUCTURAL PARTNERSHIP, INC.
7500 NW 25 St., Suite 212
Miami, FL 33122
Tel: (305) 592-9396
Fax: (305) 591-3447

Denis Solano
PE 56902, SI 2046, COA 5995

PERMIT SKETCH

Issue #	Issue Date
5	April 2, 2012
6	April 30, 2012
7	June 19, 2012
8	July 2, 2012

PROJECT: 10-1275

NEW OVER LAND WALKWAYS PLAN

SCALE : AS SHOWN
SHEET NO.
S-8

47

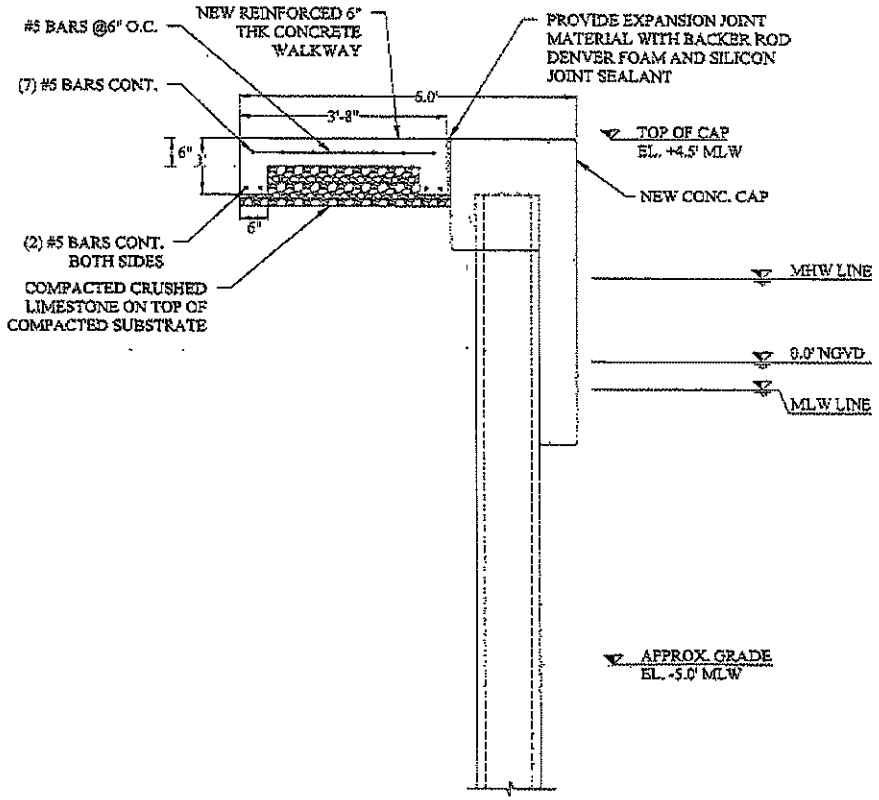

TYPICAL SECTION E
1" = 1'-0"
S-8

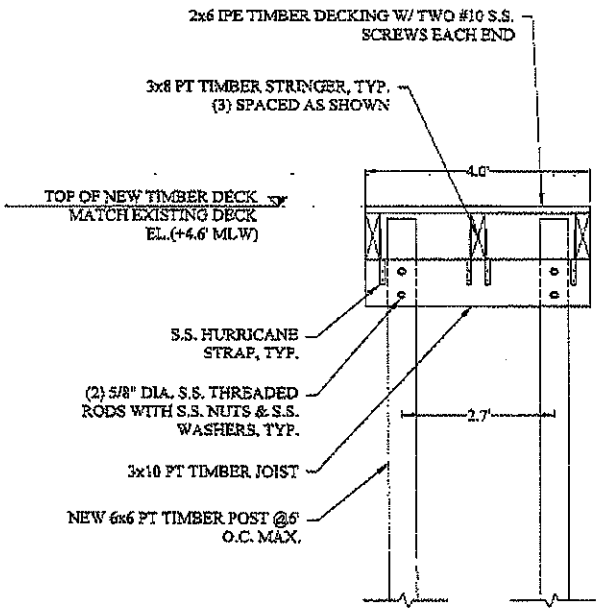

TYPICAL SECTION F
1" = 1'-0"
S-8

NOT FOR CONSTRUCTION

RECEIVED
JUL 29 2012
DERM Coastal Resources Section
Natural Resources Regulation & Restoration
Division (NRRRD)

DECKER BOAT NOTCH PROJECT
3551 Main Highway
Miami, Florida 33133

CLIENT:
LA BRISA, LLC
C/O SIMON DECKER
3551 Main Highway
Miami, Florida 33133

ENVIRONMENTAL CONSULTANT:
OCEAN CONSULTING, LLC
340 Minorca Avenue, Suite 5
Coral Gables, Florida 33134
Tel: (305) 921-9344
Fax: (305) 677-3254

SOLVER STRUCTURAL PARTNERSHIP, INC.
7500 NW 25 St., Suite 212
Miami, FL 33122
Tel: (305) 592-9396
Fax: (305) 591-3447

Denis Salem
PE 56901, SI 2046, COA 9085

PERMIT SKETCH

Issue #	Issue Date
⑤	April 2, 2012
⑥	April 30, 2012
⑦	June 19, 2012
⑧	July 2, 2012

PROJECT: 10-1275

NEW OVER LAND WALKWAYS SECTIONS

SCALE: AS SHOWN
SHEET NO.
S-9

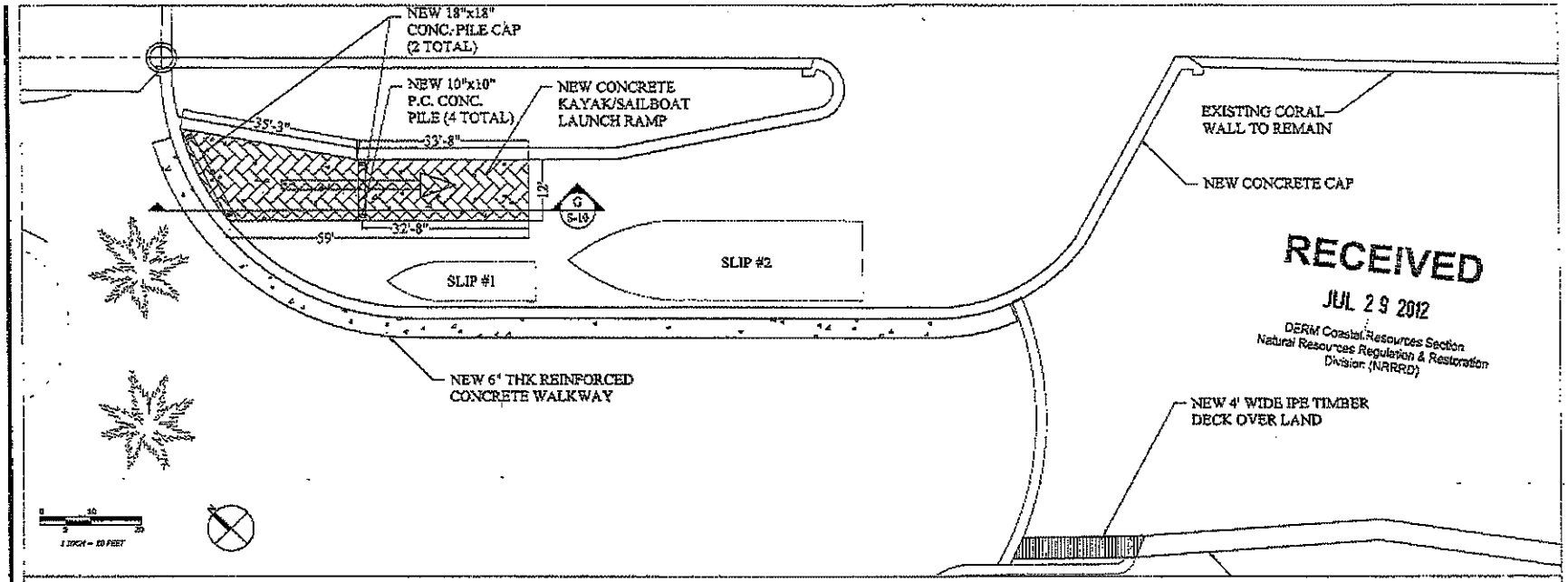

RECEIVED
JUL 29 2012
DERM Coastal Resources Section
Natural Resources Regulation & Restoration
Division (NRRRD)

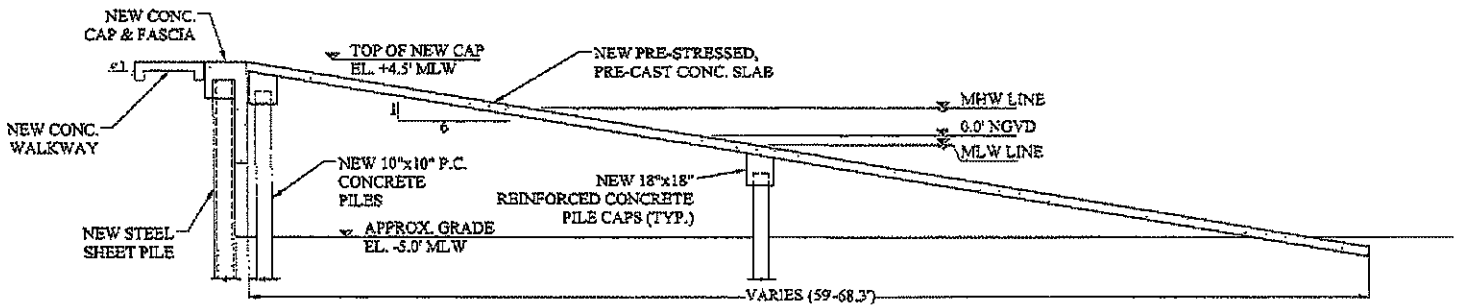

TYPICAL SECTION G S-10
1/8" = 1'-0"

NOT FOR CONSTRUCTION

49

DECKER BOAT NOTCH PROJECT
3551 Main Highway
Miami, Florida 33133

CLIENT:
LA BRISA, LLC
C/O SIMON DECKER
3551 Main Highway
Miami, Florida 33133

ENVIRONMENTAL CONSULTANT:
OCEAN CONSULTING, LLC
340 Minorca Avenue, Suite 5
Coral Gables, Florida 33134
Tel: (305) 921-9344
Fax: (305) 677-5254

SOLVER STRUCTURAL PARTNERSHIP, INC.
7500 NW 25 St., Suite 212
Miami, FL 33122
Tel: (305) 592-9396
Fax: (305) 591-3447

07/27/12
Denis Solano
PE 56902, SI 2046, COA 9055

PERMIT SKETCH

Issue #	Issue Date
5	April 2, 2012
6	April 30, 2012
7	June 19, 2012
8	July 2, 2012

PROJECT: 10-1275

PROPOSED SLIP LAYOUT & LAUNCH RAMP

SCALE : AS SHOWN
SHEET NO.
S-10

Attachment F

Existing Restrictive Covenant Running with the Land in Favor of Miami-Dade County

OFF. REC. 17295 PG 4811

P6R3.36611 1996 JUL 31 09:52

COVENANT RUNNING WITH THE LAND IN FAVOR OF METROPOLITAN DADE COUNTY

The undersigned, **JAMES AND SHIELA GRAY**, being the present owner(s) of the following real property (hereinafter called "the Property"), lying, being and situated in Dade County, Florida, to wit:

SEE ATTACHED LEGAL DESCRIPTION

pursuant to Section 24-58.2(J)(B)(2)(b) of the Code of Metropolitan Dade County, hereby submits this executed Covenant running with the land in favor of Metropolitan Dade County, Florida:

1. The undersigned agree(s) and covenant(s) that no vessel shall be moored to the gazebo and associated access pier.

2. The undersigned agree(s) and covenant(s) that mooring of vessels shall occur only in the boat basin specifically designated for the mooring of vessels, pursuant to Class I Permit CC-95-170.

3. For the purposes of this Covenant, "vessel" is herein defined as any craft designed to float or navigate on water, including but not limited to: sailboats, powerboats, rowboats, ships, hydrohoists, boats, ships, skiffs, houseboats, and inflatable boats .

4. This Covenant shall run with the land and shall be recorded in the Public Records of Dade County, Florida, and shall remain in full force and effect and be binding upon the undersigned, and their heirs, successors, grantees and assigns until such time as the same is modified or released in writing by Metropolitan Dade County.

5. This Covenant shall be subject to specific enforcement by Metropolitan Dade County, Florida. In the event that the provisions of this Covenant are not complied with by the undersigned or their heirs, successors, grantees and assigns, an action at law or in equity may be commenced by the Director of Dade County Department of Environmental Resources Management on behalf of Metropolitan Dade County against any person violating, causing, permitting, allowing or suffering the violations of said covenant.

OFF. REC. 17295PG4812

IN WITNESS WHEREOF, the undersigned have caused this covenant to be executed this 12th day of April, 1996.

Witnesses:

sign [signature]
print JUDITH MINK
sign _____
print _____

Party A [signature]

sign [signature]
print JAMES E. GRAY
SHEILA GRAY
Address 3551 MAIN HIGHWAY
COCONUT GROVE, FL 33133

Witnesses:

sign _____
print _____
sign _____
print _____

Party B _____, INC.

sign _____
print _____
Title _____
Address _____

STATE OF ~~FLORIDA~~ New York
COUNTY OF ~~DADE~~ New York

The foregoing instrument was acknowledged before me this 12th day of April, 1996, by James E Gray, who is personally known to me or who has produced drivers license as identification and who did take an oath.

CHRISTINE L. MILLER
Notary Public, State of New York
No. 31-4954053
Qualified in New York County
Commission Expires August 12, 1997

NOTARY PUBLIC:

sign [signature]
print Christine L. Miller
State of ~~Florida at Large~~ (Seal) New York
My Commission Expires: 8/12/97

STATE OF FLORIDA
COUNTY OF DADE

The foregoing instrument was acknowledged before me this _____ day of _____, 19____, by _____, as _____ of _____, INC., a Florida corporation, on behalf of the corporation. He or she is personally known to me or has produced _____ as identification and did take an oath.

NOTARY PUBLIC:

sign _____
print _____
State of Florida at Large (Seal)
My Commission Expires:

mam.0986

OFF. REC. 17295 PG 4813

OFF. REC. 15857 PG 2527

93R152344 1993 MAR 26 10:

Prepared By:
Janice L. Russell, Esq.
Akerman, Senterfitt & Eidson
801 Brickell Avenue
24th Floor
Miami, FL 33131

Property Appraiser's
Parcel Identification
Number: 01-4121-000-0130

Grantee Federal Identification
Number: 457 60 8364
279 48 9343

SPECIAL WARRANTY DEED

THIS SPECIAL WARRANTY DEED made and executed as of the 26 day of March, 1993, by COCONUT GROVE BANK, a Florida corporation, whose post office address is 2701 S. Bayshore Drive, Coconut Grove, Florida, 33133, hereinafter called the Grantor, to JAMES E. GRAY and SHEILA GRAY, his wife, whose post office address is 3551 Main Highway, Coconut Grove, Florida, 33133, hereinafter called the Grantee.

WITNESSETH: That the Grantor, for and in consideration of the sum of Ten Dollars ($10.00) and other valuable consideration, the receipt and sufficiency whereof is hereby acknowledged, by these presents does grant, bargain, sell, alien, remise, release, convey and confirm unto the Grantee, all that certain land situate in Dade County, Florida, viz:

SEE EXHIBIT "A" ATTACHED HERETO AND MADE A PART HEREOF.

TOGETHER with all the tenements, hereditaments and appurtenances thereto belonging or in anywise appertaining.

TO HAVE AND TO HOLD, the same in fee simple forever; SUBJECT, HOWEVER to the following:

1. Conditions, reservations, restrictions, limitations and easements of record.

2. Applicable zoning ordinances.

3. Taxes for the year 1993 and subsequent years.

AND the Grantor hereby covenants with said Grantee that it is lawfully seized of said land in fee simple; that it has good right and lawful authority to sell and convey said land; and hereby warrants the title to said land and will defend the same against the lawful claims of all persons claiming by, through or under the said Grantor.

Wherever used herein the terms "Grantor" and "Grantee" include all the parties to this instrument and the heirs, legal representatives and assigns of individuals, and the successors and assigns of corporations.

IN WITNESS WHEREOF the Grantor has signed and sealed these presents to be effective the day and year first written above.

Signed, sealed and delivered in our presence:

Print Name: Janice Russell

Print Name: Carol Powers

COCONUT GROVE BANK, a Florida corporation

By: A.D. HARRISON, JR., President

(CORPORATE SEAL)

DOCSTPDEE 14.100.00 SORTX

OFF. REC. 17295P4814
OFF. REC. 15857P2528

STATE OF FLORIDA)
COUNTY OF DADE)

The foregoing instrument was acknowledged before me this 26 day of March, 1993, by A.D. HARRISON, JR., the President of COCONUT GROVE BANK, a Florida corporation, who is personally known to me.

Notary Public, State of Florida
My Commission Expires:
Janice Russell

NOTARY PUBLIC STATE OF FLORIDA
MY COMMISSION EXP DEC.28,1993
BONDED THRU GENERAL INS. UND.

Print Name:

OFF. REC. 15857 PG 2529 OFF. REC. 17295 PG 4815

LEGAL DESCRIPTIONS

Parcel A:

All that part of Lot 12 as shown on the plat of a subdivision of Government Lot 1 for the fractional NE 1/4 of Section 21, Township 54 South, Range 41 East, which lies Southeasterly of the "New County Road" as now established, over and across the most Northwesterly end thereof, according to the plat thereof recorded in Deed Book "D" at page 253 of the Public Records of Dade County, Florida.

Also all that part of Lots 1, 2, 13 and 14 of Robert's subdivision of the NE 1/4 of SW 1/4 of Section 21, Township 54 South, Range 41 East, according to the plat thereof recorded in Plat Book "A" at page 21 of the Public Records of Dade County, Florida, lying Southeasterly of the County Road, except that part of Lots 13 and 14 conveyed to Paul C. Ransom by deed dated January 29, 1898 and recorded in Deed Book "H" at page 255 of the Public Records of Dade County, Florida.

Also all of that certain lot, tract or parcel of land lying and being in the County of Dade and State of Florida and described as follows: Beginning 201 feet North of the Southeast Corner of the NE 1/4 of the SW 1/4 of Section 21, Township 54 South, Range 41 East, and running thence West 17 feet, to the Southeast side of the New County Road, thence Northeasterly along the same 25 feet, and thence South 15 feet more or less to the place of beginning, being in the SW 1/4 of said Section 21.

RECORDED IN OFFICIAL RECORDS BOOK OF DADE COUNTY, FLORIDA. RECORD VERIFIED HARVEY RUVIN CLERK CIRCUIT COURT

[illegible] 217 OFF. REC. 17295 PG 4816

Trustees of the Internal Improvement Fund of the State of Florida

DEED NO: 24396 (1833-13)

KNOW ALL MEN BY THESE PRESENTS: That the undersigned, the Trustees of Internal Improvement Fund of the State of Florida, under authority of law, for and in consideration of the sum of Two Thousand Seven Hundred Forty-Three and 60/100 - - ($2,743.60) DOLLARS, to them in hand paid by HENRY FIELD of the County of Dade State of Florida, have granted bargained and sold, and do by these presents grant, bargain, sell and convey, unto the said HENRY FIELD and his heirs and assigns, the following described lands, to-wit:

[illegible], Coral Gable, Fl.

A parcel of submerged land in Biscayne Bay in Section 21, Township 54 South, Range 41 East, Dade County, Florida, being more particularly described as follows:

Commence at the NW corner of the SW¼ of the SE¼ of said Section 21, as shown in that certain agreement as recorded in Deed Book "D" at page 253 of the public records of Dade County, Florida, and being a point on the Southwesterly boundary line of Lot 12, Munroe's Plat as recorded in Deed Book "D" at page 253 of the public records of Dade County, Florida: thence run South 46° 34' 08" East along the Southwesterly boundary line of Lot 12 of said Munroe's Plat and its prolongation Southeasterly for a distance of 1,318.20 feet to its intersection thereof with the Dade County Bulkhead Line Part Three as established by the Board of County Commissioners of Dade County, Florida, by Resolution No. 2025, passed and adopted September 2, 1958, said Bulkhead Line Part Three being recorded in plat book 74 at page 3 (Sheet 5) of the public records of Dade County, Florida, and being the point of beginning of the tract of submerged land herein described: thence run North 34° 59' 44" East along the said Bulkhead Line for a distance of 207.80 feet to its intersection thereof with the prolongation Southeasterly of the Northeasterly boundary line of Lot 12 of said Munroe's Plat: thence run North 46° 29' 46" West along the prolongation Southeasterly of the Northeasterly boundary line of Lot 12 of said Munroe's Plat for a distance of 163 feet, more or less, to its intersection thereof with the mean high water line along the Westerly shore of Biscayne Bay and being the Southeasterly corner of Lot 12 of said Munroe's Plat: thence run in a Southwesterly, Southeasterly and Southwesterly direction meandering the mean high water line along the Westerly shore of Biscayne Bay for a distance of 300 feet, more or less, to the Southwesterly corner of Lot 12 of said Munroe's Plat: thence run South 46° 34' 08" East along the prolongation Southeasterly of the Southwesterly boundary line of Lot 12 of said Munroe's Plat for a distance of 78 feet, more or less, to the Point of Beginning:

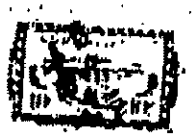

DADE COUNTY

STATE OF FLORIDA

RECORDED IN FILE

OFF. REC. 17295 PG 4817

State of Florida, County of Dade
This instrument was filed [illegible] 29 day of Nov
[illegible] RECORDS
Book [illegible] Page [illegible] 17[illegible]

E. B. LEATHERMAN
Clerk Circuit Court
By [illegible] D.C.

containing 0.76 acres more or less and being and being in the County of Dade in said State of Florida

TO HAVE AND TO HOLD the above granted and described premises forever.

SAVING AND RESERVING unto the said Trustees of the Internal Improvement Fund of the State of Florida, and their successors, title to an undivided three-fourths of all phosphate minerals and metals and title to an undivided one-half of all petroleum that may be in, on or under the above described land with the privilege to mine and develop the same.

OTHER RESERVATIONS: None

IN TESTIMONY WHEREOF, the said Trustees of the Internal Improvement Fund of the State of Florida have hereunto subscribed their names and have caused the official seal of said Trustees to be hereunto affixed, in the City of Tallahassee, Florida, on this the 8th day of November AD 1966.

(SEAL) TRUSTEES I.I. FUND

Governor

Comptroller

Treasurer

Earl Faircloth
Attorney General

Doyle Conner
Commissioner of Agriculture

As and Constituting the
TRUSTEES OF THE INTERNAL IMPROVEMENT FUND OF THE STATE OF FLORIDA

Form 1996 [illegible] Page 3 of 3 pages

'71 FEB 8 PM 4:31 [illegible]

RANCO FORM 8

OFF. REC. 17295 PG 4818

This Quit-Claim Deed, Executed this 5th day of February, A.D. 1971, by HENRY FIELD, joined by his wife, JULIA ALLEN FIELD,

first party, to HENRY FIELD and JULIA ALLEN FIELD, as Tenants by the Entireties,

whose postoffice address is 3551 Main Highway, Coconut Grove, Miami, Florida 33133,

second party:

(Whenever used herein the terms "first party" and "second party" shall include [illegible] and shall, [illegible] and [illegible] of individuals, and the successors and assigns of corporations, wherever the [illegible] be [illegible] or [illegible])

Witnesseth, That the said first party, for and in consideration of the sum of $ 10.00 in hand paid by the said second party, the receipt whereof is hereby acknowledged, does hereby remise, release and quit-claim unto the said second party forever, all the right, title, interest, claim and demand which the said first party has in and to the following described lot, piece or parcel of land, situate, lying and being in the County of Dade State of Florida, to-wit:

A parcel of submerged land in Biscayne Bay in Section 21, Township 54 South, Range 41 East, Dade County, Florida, being more particularly described as follows:

Commence at the NW corner of the SW 1/4 of the SE 1/4 of said Section 21, as shown in that certain agreement as recorded in Deed Book "D" at page 253 of the public records of Dade County, Florida, and being a point on the Southwesterly boundary line of Lot 12, Munroe's Plat as recorded in Deed Book "D" at page 253 of the public records of Dade County, Florida; then run

SOUTH 46° 34' 08" EAST along the Southwesterly boundary line of Lot 12 of said Munroe's Plat and its prolongation Southeasterly for a distance of 1,318.20 feet to its intersection thereof with the Dade County Bulkhead Line Part Three as established by the Board of County Commissioners of Dade County, Florida, by Resolution No. 2025, passed and adopted September 2, 1958, said Bulkhead Line Part Three being recorded in plat book 74 at page 3 (Sheet 5) of the public records of Dade County, Florida, and being the point of beginning of the tract of submerged land herein described; then run

NORTH 34° 59' 44" EAST along the said Bulkhead Line for a distance of 207.80 feet to its intersection thereof with the prolongation Southeasterly of the Northeasterly boundary line of Lot 12 of said Munroe's Plat; thence run

NORTH 46° 29' 46" West along the prolongation Southeasterly of the Northeasterly boundary line of Lot 12 of said Munroe's Plat for a distance

(continued on reverse)

To Have and to Hold the same together with all and singular the appurtenances thereunto belonging or in anywise appertaining, and all the estate, right, title, interest, lien, equity and claim whatsoever of the said first party, either in law or equity, to the only proper use, benefit and behoof of the said second party forever.

In Witness Whereof, The said first party has signed and sealed these presents the day and year first above written.

Signed, sealed and delivered in presence of:

[signature] [signature] Henry Field

[signature] [signature] Julia Allen Field

STATE OF FLORIDA,
COUNTY OF Dade

I HEREBY CERTIFY that on this day, before me, an officer duly authorized in the State aforesaid and in the County aforesaid to take acknowledgments, personally appeared

HENRY FIELD and JULIA ALLEN FIELD

to me known to be the person described in and who executed the foregoing instrument and they acknowledged before me that they executed the same.

WITNESS my hand and official seal in the County and State last aforesaid this 5th day of February A.D. 1971.

[signature]
Notary Public

[illegible]

This instrument prepared by: Willard R. Brown
Address 1000 First National Bank Building
Miami, Florida 33131

of 163 feet, more or less, to its intersection thereof with the mean high water line along the Westerly shore of Biscayne Bay and being the Southeasterly corner of Lot 12 of said Munroe's Plat; then run in a SOUTHWESTERLY, SOUTHEASTERLY AND SOUTHWESTERLY direction meandering the mean high water line along the Westerly shore of Biscayne Bay for a distance of 300 feet, more or less to the Southwesterly corner of Lot 12 of said Munroe's Plat; then run

SOUTH 46° 34' 30" EAST along the prolongation Southeasterly of the Southwesterly boundary line of Lot 12 of said Munroe's Plat for a distance of 78 feet, more or less, to the Point of Beginning;

Containing 0.76 acres more or less and lying and being in the County of Dade in said State of Florida.

STATE OF FLORIDA DOCUMENTARY STAMP TAX $00.30

FLORIDA DOCUMENTARY SURTAX $00.55

RECORDED IN OFFICIAL RECORDS BOOK OF DADE COUNTY, FLORIDA. RECORD VERIFIED E. H. LATHERMAN CLERK CIRCUIT COURT

Quit Claim Deed

RECORDED IN OFFICIAL RECORDS BOOK OF DADE COUNTY, FLORIDA. RECORD VERIFIED HARVEY RUVIN CLERK CIRCUIT COURT

RECORDERS NOTE: The legibility of writing, typing or printing unsatisfactory in this document when received.

Attachment G

Department of Regulatory and Economic Resources Project Report

PROJECT REPORT
CLASS I PERMIT APPLICATION NO. 2011-CLI-PER-00074

Class I Permit Application by La Brisa, LLC to Excavate Wetlands for the Construction of a Residential Boat Notch and to Authorize the Acceptance of a Restrictive Covenant Running with the Land in Favor of Miami-Dade County at 3551 Main Highway in the City of Miami.

DATE: July 9, 2012

Staff's recommendation of approval for the above-referenced permit application is based on the applicable evaluation factors under Section 24-48.3 of the Code of Miami-Dade County, Florida. The following is a summary of the proposed project with respect to each applicable evaluation factor:

1. **Potential Adverse Environmental Impact** – The proposed project shall result in permanent impacts to 0.08 acres of halophytic (salt tolerant) wetlands. The wetland areas are primarily vegetated with *Rhizophora mangle* (red mangrove), *Laguncularia racemosa* (white mangrove), *and Avicennia germinans* (black mangrove). Said wetlands will be excavated to expand an existing boat notch at the property. Impacts to wetlands have been minimized and the applicant has designed the project to maximize the use of upland areas and avoid impacts to an adjacent 1.15-acre high quality wetland system. The area to be excavated for the boat notch expansion is connected to the high quality wetland system but is surrounded on three sides by a coral rock wall. This separation provides for only a narrow corridor that limits water flow and decreases the overall health and productivity of the area. In order to mitigate for impacts to 0.08 acres of wetlands, the applicant will convert approximately 0.04 acres of on-site upland areas into wetlands at the property. The newly created halophytic wetlands will be directly connected to the high quality wetlands.

   Mitigation for wetland impacts that cannot be accommodated onsite will be satisfied through the purchase of 0.05 credits from the Everglades Mitigation Bank (EMB). The wetland restoration and enhancement projects conducted within the EMB have enhanced property in the South Dade Wetland Basin by removing invasive exotic vegetation, replanting with native species, and restoring filled areas to natural wetland grade. Federal, state, and local regulatory permits issued for the EMB require monitoring and maintenance of the bank land in perpetuity. Mitigation for water quality impacts associated with the construction of a new seawall along the boat notch will be submitted in the form of a contribution to the Biscayne Bay Environmental Enhancement Trust Fund.

   In order to ensure the success of the mitigation areas associated with the impacts of this project, and the preservation of the high quality wetland system at the site, a Restrictive Covenant Running with the Land in Favor of Miami-Dade County will designate all wetlands on-site as mitigation areas. The restrictive covenant will also require that the mitigation areas be managed such that they are not disturbed or removed, and shall remain free from invasive and exotic vegetation in perpetuity.

   The project was evaluated for consistency with the Miami-Dade County Manatee Protection Plan (MDCMPP). The project site is located in an area designated by the MDCMPP as essential habitat for the *Trichechus manatus* (West Indian Manatee). The applicant has developed a comprehensive manatee protection plan to deal with any potential adverse impacts to manatees during construction. Furthermore, the Class I permit shall require that all standard construction permit conditions regarding manatees be followed during all in-water operations.

2. **Potential Cumulative Adverse Environmental Impact** – The proposed project shall result in permanent impacts to 0.08 acres of wetlands. However, impacts have been minimized and shall be mitigated as set forth in Number 1 above.

3. **Hydrology** - The proposed project is not reasonably expected to adversely affect surface water drainage or retention of stormwater.

4. **Water Quality** – The proposed project includes the installation of a new seawall along the expanded boat notch and may temporarily impact water quality within the terminus of the canal. In order to minimize impacts to water quality, turbidity curtains will be installed and shall remain in place until construction activities have been completed. In addition, the Class I permit shall require that standard erosion control devices be implemented during the expansion of the boat notch. Unavoidable impacts to water quality have been minimized and shall be mitigated as set forth in Number 1 above.

5. **Wellfields** – Not applicable.

6. **Water Supply** – Not applicable.

7. **Aquifer Recharge** – Not applicable.

8. **Aesthetics** – The project is designed to be aesthetically compatible with the surrounding area. However, during the construction process, there may be temporary aesthetic impacts related to the presence of barges and other machinery associated with construction activities.

9. **Navigation** – The proposed project area is located at the terminus of the canal and only has the potential to impact navigation to 2 other properties. However, the applicant will be required to provide navigational access and the boat notch will improve navigation at the terminus of the canal.

10. **Public Health** - The proposed project is not reasonably expected to adversely affect public health.

11. **Historic Values** - The proposed project is not reasonably expected to adversely affect historic values.

12. **Archaeological Values** - The proposed project is not reasonably expected to adversely affect archaeological values.

13. **Air Quality** – The proposed project is not reasonably expected to adversely affect air quality.

14. **Marine and Wildlife Habitats** – The proposed project involves permanent impacts to 0.08 acres of wetlands. Therefore, wetland habitat for small mammals and wading birds may be temporarily impacted as a result of the removal of vegetation and excavation of wetlands. However, the project site is directly adjacent to a 1.15-acre high quality wetland system that can be used as alternate habitat. Additional wetland areas will be created once the project is complete, increasing the overall quality of the wetland system at the property. In addition, unavoidable impacts to wildlife habitats have been minimized and shall be mitigated as set forth in Number 1 above.

    A biological assessment conducted by RER biologists revealed no significant benthic resources along the canal. Therefore, the proposed project is not reasonably expected to adversely affect marine habitats.

15. **Wetland Soils Suitable for Habitat** – The proposed project will result in permanent impacts to 0.08 acres of wetland soils suitable for habitat. However, the project site is directly adjacent to a 1.15-acre high quality wetland system that can be used as alternate habitat. Additional wetland areas will be created once the project is complete, increasing the overall quality of the wetland system at the property. In addition, unavoidable impacts to wetland soils suitable for habitat have been minimized and shall be mitigated as set forth in Number 1 above.

16. **Floral Values** – The proposed project will result in temporary impacts to 0.08 acres of flora as a result of the removal of vegetation for the expansion of the boat notch. The wetland area to be excavated is primarily vegetated with red mangrove, white mangrove, and black mangrove. However, impacts to floral values have been minimized and shall be mitigated as set forth in Number 1 above.

    In order to ensure the success of the mitigation areas associated with the impacts of this project, and the preservation of the high quality wetland system at the site, a Restrictive Covenant Running with the Land in Favor of Miami-Dade County will designate the all wetlands on-site as mitigation areas as set forth in Number 1 above.

17. **Fauna Values** - The project may result in temporary impacts to fauna values due to the displacement of fauna such as small mammals and wading birds. In addition, the area has the potential to be utilized by *Crocodylus acutus* (American Crocodile) and *Mycteria americana* (Wood Stork). However, the project site is directly adjacent to a 1.15-acre high quality wetland system that can be used as alternate habitat. Additional wetland areas will be created once the project is complete, increasing the overall quality of the wetland system at the property. In addition, unavoidable impacts to fauna values have been minimized and shall be mitigated as set forth in Number 1 above.

18. **Rare, Threatened and Endangered Species** – The area has the potential to be utilized by the American Crocodile and Wood Stork. However, the project site is directly adjacent to a 1.15-acre high quality wetland system that can be used as alternate habitat. Additional wetland areas will be created once the project is complete, increasing the overall quality of the wetland system at the property. In addition, unavoidable impacts to fauna values have been minimized and shall be mitigated as set forth in Number 1 above.

    The project site is located in an area designated by the MDCMPP as essential habitat for the West Indian Manatee. The applicant has developed a comprehensive manatee protection plan to deal with any potential adverse impacts to manatees during construction. Furthermore, the Class I permit shall require that all standard construction permit conditions regarding manatees be followed during all in-water operations.

19. **Natural Flood Damage Protection** - The proposed project is not reasonably expected to adversely affect surface water drainage or retention of stormwater.

20. **Wetland Values** –The proposed project will result in impacts to 0.08 acres of wetland values as a result of excavation for the expansion of the boat notch. However, impacts to wetland habitats have been minimized and shall be mitigated as set forth in Number 1 above.

21. **Land Use Classification** – Pursuant to Section 24-48.2(II)(A)(7), of the Code of Miami-Dade County, Florida, a substantiating letter shall be submitted stating that the proposed project does not violate any zoning laws. Said letter will be submitted after the approval by the Board of County Commissioners and prior to the issuance of a Class I permit.

22. **Recreation** - The proposed project does not conflict with the recreation element of the Miami-Dade County Comprehensive Development Master Plan.

23. **Other Environmental Values Affecting the Public Interest** – The proposed project is not reasonably expected to adversely affect other environmental values affecting the public interest. The proposed project will occur on lands owned entirely by the applicant.

24. **Conformance with Standard Construction Procedures and Practices and Design and Performance Standards** – The proposed project complies with the standard construction procedures and practices and design and performance standards of the applicable portions of the following:
    a) Chapter 33B of the Code of Miami-Dade County
    b) Miami-Dade County Public Works Manual

25. **Comprehensive Environmental Impact Statement (CEIS)** - In the opinion of the Director, the proposed project is not reasonably expected to result in significant adverse environmental impacts or cumulative adverse environmental impacts. Therefore, a CEIS was not required by RER to evaluate the project.

26. **Conformance with All Applicable Federal, State and Local Laws and Regulations** - The proposed project is in conformance with applicable State, Federal and local laws and regulations:
    a) Chapter 24 of the Code of Miami-Dade County
    b) United States Clean Water Act (US Army Corps of Engineers, permit is required)
    c) Florida Department of Environmental Protection (permit is required)

27. **Conformance with the Miami-Dade County Comprehensive Development Master Plan (CDMP)** - In the opinion of the Director, the proposed project is in conformance with the CDMP. The following is a summary of the proposed project as it relates to the CDMP:

LAND USE ELEMENT I:

Objective 3/Policies 3A, 3B, 3C - Protection of natural resources and systems. – The proposed project is consistent with the Conservation and Coastal Management Elements of the CDMP. The project is compatible with surrounding land uses in Biscayne Bay and does not involve development in the Big Cypress area of Critical State concern or the East Everglades.

TRANSPORTATION ELEMENT II

Aviation Subelement/Objective 9 - Aviation System Expansion - There is no aviation element to the proposed project.

Port of Miami River Subelement/Objective 3 - Minimization of impacts to estuarine water quality and marine resources. The proposed project is not located within the Miami River.

CONSERVATION, AQUIFER RECHARGES AND DRAINAGE ELEMENT IV:

Objective 3/Policies 3A, 3B, 3D - Wellfield protection area protection. - The proposed project is not located within a wellfield protection area.

Objective 3/Policy 3E - Limestone mining within the area bounded by the Florida Turnpike, the Miami-Dade/ Broward Levee, N.W. 12 Street and Okeechobee Road. - The proposed project is not located within this area.

Objective 4/Policies 4A, 4B, 4C - Water storage, aquifer recharge potential and maintenance of natural surface water drainage. - The proposed project is not reasonably expected to adversely affect water storage, aquifer recharge potential or natural surface water drainage.

Objective 5/Policies 5A, 5B, 5F - Flood protection and cut and fill criteria – The proposed project does not compromise flood protection. The new facility will include on-site drainage for stormwater.

Objective 6/Policy 6A - Areas of highest suitability for mineral extraction. - The proposed project is not located in an area proposed or suitable for mineral extraction.

Objective 6/Policy 6B - Guidelines for rock quarries for the re-establishment of native flora and fauna. - The proposed project is not located in a rock quarry.

Objective 6/Policy 6D - Fill material on-site is suitable for the support of development. – The excavated wetland sediments are not intended to be used for the support of development.

Objective 7/Policy 7A - No net loss of high quality, relatively unstressed wetlands. – Although the proposed project will impact 0.08 acres of wetlands, the project is not reasonably expected to impact high quality, relatively unstressed wetlands. The area to be excavated in association with the boat notch expansion is connected to the high quality wetland system; however, it is surrounded on three sides by a coral rock wall. This separation provides for only a narrow corridor that limits water flow and decreases the overall health and productivity of the area. Impacts to wetlands have been minimized and shall be mitigated as set forth in Number 1 above.

Objective 9/Policies 9A, 9B, 9C - Protection of habitat critical to Federal or State-designated threatened or endangered species. – The area has the potential to be utilized by the American Crocodile and Wood Stork. However, the project site is directly adjacent to a 1.15-acre high quality wetland system that can be used as alternate habitat. Additional wetland areas will be created once the project is complete, increasing the overall quality of the wetland system at the property. In addition, unavoidable impacts to fauna values have been minimized and shall be mitigated as set forth in Number 1 above.

The project site is located in an area designated by the MDCMPP as essential habitat for the West Indian Manatee. The applicant has developed a comprehensive manatee protection plan to deal with any potential adverse impacts to manatees during construction. Furthermore, the Class I permit shall require that all standard construction permit conditions regarding manatees be followed during all in-water operations.

COASTAL MANAGEMENT ELEMENT VII:

Objective 1/Policy 1A - Tidally connected mangroves in mangrove protection areas – The project is not located within a designated "Mangrove Protection Area."

Objective 1/ Policy 1B - Natural surface flow into and through coastal wetlands. – The proposed project will result in impacts to 0.08 acres of wetland values as a result of excavation for the expansion of the boat notch. The area to be excavated in association with the boat notch expansion is connected to an adjacent high quality wetland system; however, the wetlands to be excavated are surrounded on three sides by a coral rock wall. This separation provides for only a narrow corridor that limits water flow and decreases the overall health and productivity of the area. A system of culverts was incorporated to the seawall along the canal that allows natural flushing of the adjacent high quality wetlands. However, this system does not extend to the seawall along the area of wetlands to be excavated; therefore, the project is not reasonably expected to impact natural surface flow into and through coastal wetlands.

Objective 1/ Policy 1C - Elevated boardwalk access through mangroves. – The project does not involve access through mangroves. A previously permitted elevated boardwalk that provides access to a fishing pier located on the east side of the property is present at the site. The upland area adjacent to the start of the existing boardwalk will be scraped down and converted to a wetland area to satisfy a portion of the impacts associated with the expansion of the boat notch as set forth in Number 1 above. In order to maintain access, said boardwalk will be extended over the newly created wetlands. The extension of the existing boardwalk is not reasonably expected to impact the mangroves that exist at the site.

Objective 1/Policy 1D - Protection and maintenance of mangrove forests and related natural vegetational communities. - The proposed project will result in permanent impacts to 0.08 acres of wetlands. Impacts to wetlands have been minimized and the applicant has designed the project to maximize the use of upland areas and avoid impacts to an adjacent 1.15-acre high quality wetland system. Unavoidable impacts to wetlands have been minimized and shall be mitigated as set forth in Number 1 above.

Objective 1/Policy 1E - Mitigation for the degradation and destruction of coastal wetlands. Monitoring and maintenance of mitigation areas. – The proposed project will result in permanent impacts to 0.08 acres of wetlands. Unavoidable impacts to wetlands have been minimized and shall be mitigated as set forth in Number 1 above.

In order to ensure the success of the mitigation areas associated with the impacts of this project, and the preservation of the high quality wetland system at the site, a Restrictive Covenant Running with the Land in Favor of Miami-Dade County will designate the all wetlands on-site as mitigation areas. The Restrictive Covenant will also require that the mitigation areas be managed such that they are not disturbed or removed, and shall remain free from invasive and exotic vegetation in perpetuity.

Objective 1/Policy 1G - Prohibition on dredging or filling of grass/algal flats, hard bottom or other viable benthic communities, except as provided for in Chapter 24 of the Code of Miami-Dade County, Florida. – The proposed project does not involve dredging or filling of grass/algal flats, hard bottom, or other viable benthic communities.

Objective 2/Policies 2A, 2B - Beach restoration and renourishment objectives. - The proposed project does not involve beach restoration or renourishment.

Objective 3/Policies 3E, 3F - Location of new cut and spoil areas for proper stabilization and minimization of damages. - The proposed project does not involve the development or identification of new cut or spoil areas.

Objective 4/Policy 4A, 4C, 4E, 4F – Protection of endangered or threatened animal species - The area has the potential to be utilized by the American Crocodile and Wood Stork. However, the project site is directly adjacent to a 1.15-acre high quality wetland system that can be used as alternate habitat. Additional wetland areas will be created once the project is complete, increasing the overall quality of the wetland system at the property. In addition, unavoidable impacts to fauna values have been minimized and shall be mitigated as set forth in Number 1 above.

The project site is located in an area designated by the MDCMPP as essential habitat for the West Indian Manatee. The applicant has developed a comprehensive manatee protection plan to deal with any potential adverse impacts to manatees during construction. Furthermore, the Class I permit shall require that all standard construction permit conditions regarding manatees be followed during all in-water operations.

Objective 5/Policy 5B - Existing and new areas for water-dependent uses. - The property currently has one authorized boat slip area within a small boat notch located along the canal shoreline. The existing boat notch is being expanded to provide for the mooring of a second vessel. The project is not reasonably expected to adversely impact existing and new areas for water-dependent use.

Objective 5/Policy 5D - Consistency with Chapter 33D, Miami-Dade County Code (shoreline access, environmental compatibility of shoreline development) – The proposed project site is zoned as a single-family residence; therefore, the thresholds for review by the Shoreline Development Review Committee under the Shoreline Ordinance do not apply and the proposed project is not subject to shoreline development review.

Objective 5/Policy 5F - The siting of water dependent facilities. - The proposed project does not involve the creation of any new water dependent facilities.

28. **Conformance with Chapter 33B, Code of Miami-Dade County** (East Everglades Zoning Overlay Ordinance) – The proposed project is not located within the East Everglades Area.

29. **Conformance with Miami-Dade County Ordinance 81-19** (Biscayne Bay Management Plan Sections 33D-1 through 33D-4 of the Code of Miami-Dade County) - The proposed project is not located within Biscayne Bay.

30. **Conformance with the Miami-Dade County Manatee Protection Plan** - The project was evaluated for consistency with the MDCMPP. The project site is located in an area designated by the MDCMPP as essential habitat for the West Indian Manatee. The applicant has developed a comprehensive manatee protection plan to deal with any potential adverse impacts to manatees during construction. Furthermore, the Class I permit shall require that all standard construction permit conditions regarding manatees be followed during all in-water operations.

31. **Consistency with Miami-Dade County Criteria for Lake Excavation** – The proposed project does not involve lake excavation.

32. Municipality Recommendation – Pursuant to Section 24-48.2(II)(A)(7), Code of Miami-Dade County, Florida, a substantiating letter shall be submitted stating that the proposed project does not violate any zoning laws. Said letter will be submitted after the approval by the Board of County Commissioners and prior to the issuance of the Class I permit.

33. Coastal Resources Management Line - A coastal resources management line was not required for the proposed project, pursuant to Section 24-48.2(II)(A)(10)(b) of the Code of Miami-Dade County.

34. Maximum Protection of a Wetland's Hydrological and Biological Functions – The proposed project will result in permanent impacts to 0.08 acres of wetlands. Impacts to wetlands have been minimized and the applicant has designed the project to maximize the use of upland areas and avoid impacts to an adjacent 1.15-acre high quality wetland system. Unavoidable impacts to wetlands have been minimized and shall be mitigated as set forth in Number 1 above.

35. Class I Permit Applications Proposing to Exceed the Boundaries Described in Section D-5.03(2)(a) of the Miami-Dade County Public Works Manual –
    i. **Whether the proposed exceedance is the minimum necessary to avoid seagrasses or other valuable environmental resources** – Not applicable.
    ii. **Whether the proposed exceedance is the minimum necessary to achieve adequate water depth for mooring of a vessel** – Not applicable.
    iii. **Whether the applicant has provided notarized letters of consent from adjoining riparian property owners** – Not applicable.
    iv. **Whether any letters of objection from adjoining riparian property owners were received by the Department** – No letters of objection from adjoining property owners have been received.

The proposed project was also evaluated for compliance with the standards contained in Sections 24-48.3(2),(3), and (4) of the Code of Miami-Dade County, Florida. The following is a summary of how the standards relate to the proposed project:

24-48.3 (2) Dredging and Filling for Class I Permit – The proposed project complies with the following criteria:
    a) Minimum dredging and filling for the creation and maintenance of marinas, piers, docks and attendant navigational channels.

24-48.3 (3) Minimum Water Depth Required for Boat Slips Created by the Construction or Placement of Fixed or Floating Docks and Piers, Piles and Other Structures Requiring a Permit Under Article IV, Division 1 of Chapter 24 of the Code of Miami-Dade County - The proposed excavation for the construction of the private residential boat notch will provide mooring space for 2 vessels. The areas shall be excavated to a maximum of 5.0 feet mean low water, which is adequate water depth for the vessels proposed to be moored in the expanded boat notch.

24-48.3 (4) Clean Fill in Wetlands – The proposed project does not involve placing clean fill in wetlands.

BASED ON THE FOREGOING, IT IS RECOMMENDED THAT A CLASS I PERMIT BE APPROVED.

Lisa Spadafina, Manager
Coastal Resources Section

Nicole Fresard, Biologist II
Coastal Resources Section