Memorandum

MIAMI-DADE COUNTY

Date: May 6, 2014

Agenda Item No. 3(B)(1)

To: Honorable Chairwoman Rebeca Sosa
and Members, Board of County Commissioners

From: Carlos A. Gimenez
Mayor

Subject: Ratification of Acceptance and Execution of Other Transaction Agreement with the Transportation Security Administration for the Miami International Airport Checked Baggage Screening Construction Program, in the amount of $101,161,252.00

RECOMMENDATION

It is recommended that the Board of County Commissioners (Board) adopt the attached Resolution ratifying the actions of the County Mayor's designee, pursuant to the provisions of the Miami-Dade Aviation Department (MDAD) Expedite Ordinance No. 95-64, codified as Section 2-285 of the Miami-Dade County Code, accepting and executing Other Transaction Agreement (OTA) # HSTS04-13-H-CT1147 with the Transportation Security Administration (TSA). The OTA provides $101,161,252.00 for the new Baggage Handling Systems (BHS) at Miami International Airport Terminals E, F, G, H and J.

SCOPE

Miami International Airport (MIA) is located within Chairwoman Rebeca Sosa's District Six; however, the impact of this item is Countywide in nature as MIA is a regional asset.

FISCAL IMPACT/FUNDING SOURCE

The overall cost of the Checked Baggage Screening Construction Program is estimated at just over $147 million. The sources of funding for the project are this OTA and Passenger Facility Charges.

DELEGATED AUTHORITY

Approval of this item authorizes the Mayor or designee to execute any further modifications or amendments to this Agreement.

PROJECT MONITOR

This project is managed by MDAD Senior Aviation Cost Manager Debra J. Shore.

BACKGROUND

To comply with the Aviation and Transportation Security Act of 2001, the TSA deployed stand-alone Explosive Detection System (EDS) equipment in MIA Terminals E, F, G and H to screen passenger baggage. The TSA provided an additional 10 in-line (automated) EDS machines for the South Terminal. All of this equipment has or is coming to the end of its planned life and needs to be replaced. Consequently, in November 2012, the TSA issued to MDAD a $300,000.00 OTA to prepare alternatives to the existing BHS currently in use at the South and Central Terminals. The result of that effort is the basis for this OTA.

The OTA funds the majority of the modification to or construction of the BHS EDS at Concourses E, F, G, H and J. MDAD contractors will design and construct the BHS while the TSA will procure, deliver and install the equipment. All work shall be completed in accordance with the TSA's planning guidelines and design standards for checked baggage inspection systems.

Jack Osterholt, Deputy Mayor

MEMORANDUM

(Revised)

TO: Honorable Chairwoman Rebeca Sosa
and Members, Board of County Commissioners

DATE: May 6, 2014

FROM: R. A. Cuevas, Jr.
County Attorney

SUBJECT: Agenda Item No. 3(B)(1)

Please note any items checked.

_____	**"3-Day Rule" for committees applicable if raised**
_____	**6 weeks required between first reading and public hearing**
_____	**4 weeks notification to municipal officials required prior to public hearing**
_____	**Decreases revenues or increases expenditures without balancing budget**
_____	**Budget required**
_____	**Statement of fiscal impact required**
_____	**Ordinance creating a new board requires detailed County Mayor's report for public hearing**
___√___	**No committee review**
_____	**Applicable legislation requires more than a majority vote (i.e., 2/3's ____, 3/5's ____, unanimous _____) to approve**
_____	**Current information regarding funding source, index code and available balance, and available capacity (if debt is contemplated) required**

Approved _____ Mayor
Veto _____
Override _____

Agenda Item No. 3(B)(1)
5-6-14

RESOLUTION NO. _____

RESOLUTION RATIFYING ACTION OF THE COUNTY MAYOR OR COUNTY MAYOR'S DESIGNEE, PURSUANT TO THE PROVISIONS OF ORDINANCE NO. 95-64, IN ACCEPTING AND EXECUTING AN OTHER TRANSACTION AGREEMENT # HSTS04-13-H-CT1147 WITH THE TRANSPORTATION SECURITY ADMINISTRATION, PROVIDING FOR THE REIMBURSEMENT OF $101,161,252.00 FOR THE NEW BAGGAGE HANDLING SYSTEMS (BHS) AT MIAMI INTERNATIONAL AIRPORT (MIA) TERMINALS E, F, G, H, AND J

WHEREAS, this Board desires to accomplish the purposes outlined in the accompanying memorandum, a copy of which is incorporated herein by reference; and

WHEREAS, the County Mayor or County Mayor's designee has accepted and executed an Other Transaction Agreement # HSTS04-13-H-CT1147 with the Transportation Security Administration in accordance with the provisions of Ordinance No. 95-64; and

WHEREAS, the Other Transaction Agreement provides funding by the Transportation Security Administration in the amount of $101,161,252.00 for the new Baggage Handling Systems (BHS) at Miami International Airport (MIA) Terminals E, F, G, H, and J, all as more particularly set forth in the accompanying memorandum from the Mayor,

NOW, THEREFORE, BE IT RESOLVED BY THE BOARD OF COUNTY COMMISSIONERS OF MIAMI-DADE COUNTY, FLORIDA, that this Board hereby approves and ratifies the actions of the County Mayor or County Mayor's designee, pursuant to the provisions of Ordinance No. 95-64, in accepting and executing an Other Transaction Agreement, providing funding by the Transportation Security Administration in the amount of $101,161,252.00 for the new Baggage Handling Systems (BHS) at Miami International Airport

(MIA) Terminals E, F, G, H, and J, all as more particularly set forth in the accompanying memorandum, and to execute any subsequent supplemental agreements thereto, with subsequent ratification by this Board.

The foregoing was offered by Commissioner , who moved its adoption. The motion was seconded by Commissioner and upon being put to a vote, the vote was as follows:

Rebeca Sosa, Chairwoman
Lynda Bell, Vice Chair

Bruno A. Barreiro	Esteban L. Bovo, Jr.
Jose "Pepe" Diaz	Audrey M. Edmonson
Sally A. Heyman	Barbara J. Jordan
Jean Monestime	Dennis C. Moss
Sen. Javier D. Souto	Xavier L. Suarez
Juan C. Zapata	

The Chairperson thereupon declared the resolution duly passed and adopted this 6th day of May, 2014. This resolution shall become effective ten (10) days after the date of its adoption unless vetoed by the Mayor, and if vetoed, shall become effective only upon an override by this Board.

MIAMI-DADE COUNTY, FLORIDA
BY ITS BOARD OF
COUNTY COMMISSIONERS

HARVEY RUVIN, CLERK

By:_____
Deputy Clerk

Approved by County Attorney as
to form and legal sufficiency.

David M. Murray

OTHER TRANSACTION AGREEMENT

BETWEEN

DEPARTMENT OF HOMELAND SECURITY
TRANSPORTATION SECURITY ADMINISTRATION

AND

MIAMI DADE AVIATION DEPARTMENT

RELATING TO

MIAMI INTERNATIONAL AIRPORT

Checked Baggage Recapitalization Screening Construction Services Project

---

Negotiated by the TSA pursuant to
Aviation and Transportation Security Act, Pub. L. 107-71, 115 Stat. 597
49 U.S.C. §114(m)(1) and 106(l)(6).

HSTS04-13-H-CT1147

ARTICLE I – PARTIES

The parties to this Other Transaction Agreement (OTA are the U.S. Department of Homeland Security, Transportation Security Administration (TSA) and the **MIAMI DADE AVIATION DEPARTMENT (MDAD)** as owner and operator of **MIAMI INTERNATIONAL AIRPORT (MIA** or Airport). The TSA and **MDAD** agree to cooperate in good faith and to perform their respective obligations in executing the purpose of this Construction Agreement.

ARTICLE II – LEGAL AUTHORITY

This Construction Agreement is entered into under the authority of the Aviation and Transportation Security Act, Pub. L. 107-71, 115 Stat. 597, specifically 49 U.S.C. § 114(m)(1) and 106(l)(6), which authorizes other transaction agreements.

ARTICLE III – SCOPE

The purpose of this Agreement is to set forth the terms and conditions, as well as establish the respective cost-sharing obligations of the TSA and **MDAD** with respect to the design, engineering and construction-related services necessary to implement the construction of the TSA recapitalization project design submitted by **MDAD** as outlined in the 30% design package submission and reviewed by TSA pursuant to the TSA Planning Guidelines and Design Standards (PGDS) Version 4.1 found at:
http://www.tsa.gov/research-center/airport-checked-baggage-guidance-materials

This Project undertaken by **MDAD** involves the modification to or construction of the Airport terminal building infrastructure to recapitalize the TSA EDS systems located within the Checked Baggage Inspection System in **Concourses E, F, G, H and J.** Terminal modifications include required changes to baggage conveyor components, mechanical, plumbing, electrical, structural, and telecommunications infrastructure to provide for the installation of Explosive Detection Equipment (EDS) within the baggage screening area, Explosive Trace Detection (ETD) equipment in the Checked Baggage Resolution areas, and the installation of applicable CBIS hardware and software for use with a checked baggage in-line baggage screening system. The objective of the Project is to enhance Airport security and baggage screening capabilities and throughput.

ARTICLE IV – COST SHARING AND OTHER RESPONSIBILITIES

1. Capital Costs: The estimated cost of the Project (Total Project Cost) relates to the activities to modify the airport terminal building infrastructure and the baggage handling system (BHS) to support the installation and operation of the EDS and ETD equipment in Concourses E, F, G, H and J. It does not include the costs of acquisition, delivery or installation of the EDS and ETD equipment itself. TSA will be solely responsible for the acquisition, delivery, installation, and testing of the EDS and ETD equipment at the designated Project location(s). All work performed by **MDAD** pursuant to this Agreement shall be accomplished in accordance with the TSA PGDS.

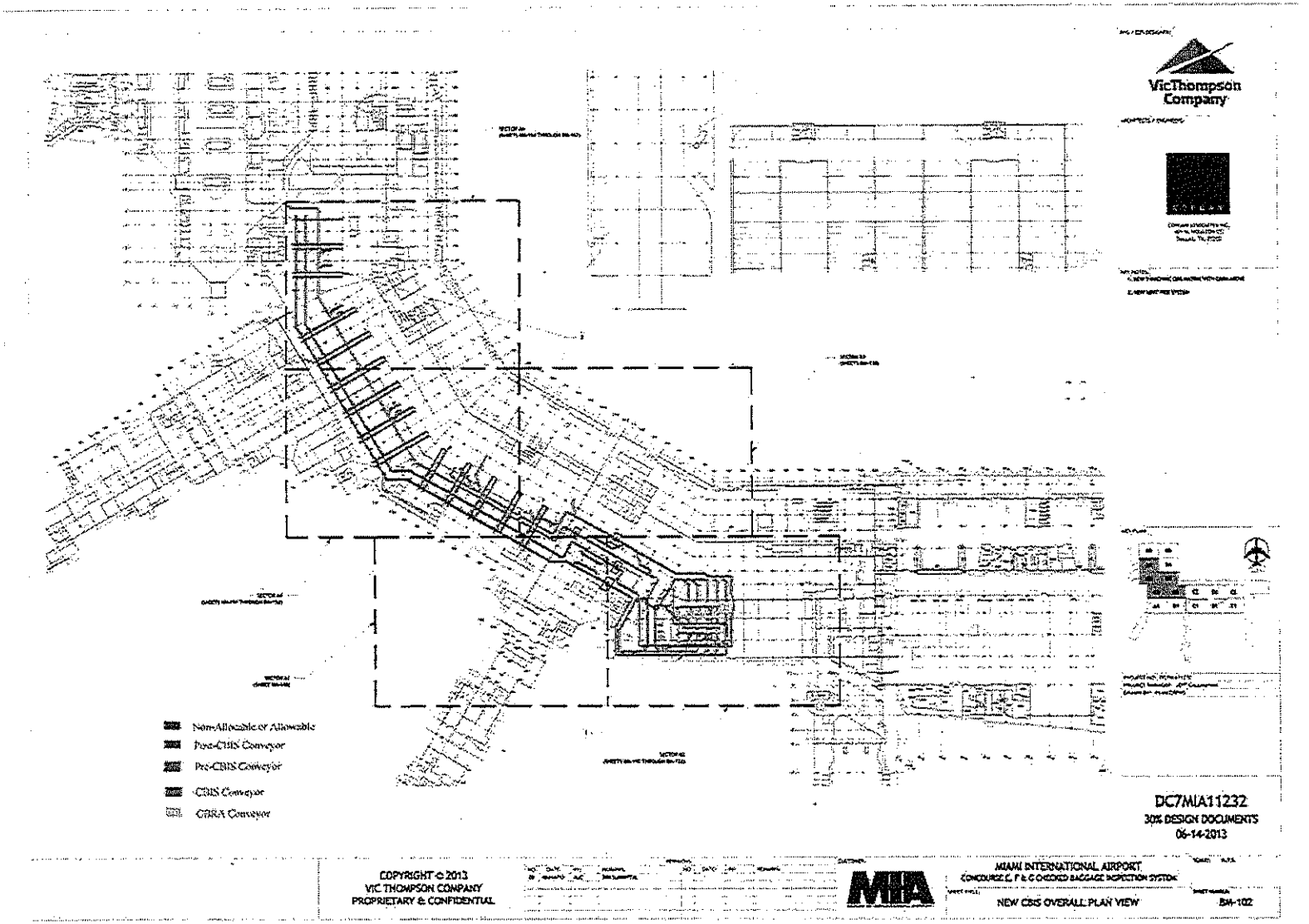
VicThompson Company
Non-Allocable or Allowable
Post-CBIS Conveyor
Pre-CBIS Conveyor
CBIS Conveyor
CBRA Conveyor
DC7MIA11232
30% DESIGN DOCUMENTS
06-14-2013
COPYRIGHT © 2013
VIC THOMPSON COMPANY
PROPRIETARY & CONFIDENTIAL
MIAMI INTERNATIONAL AIRPORT
CONCOURSE E, F & G CHECKED BAGGAGE INSPECTION SYSTEM
NEW CBIS OVERALL PLAN VIEW
BM-102

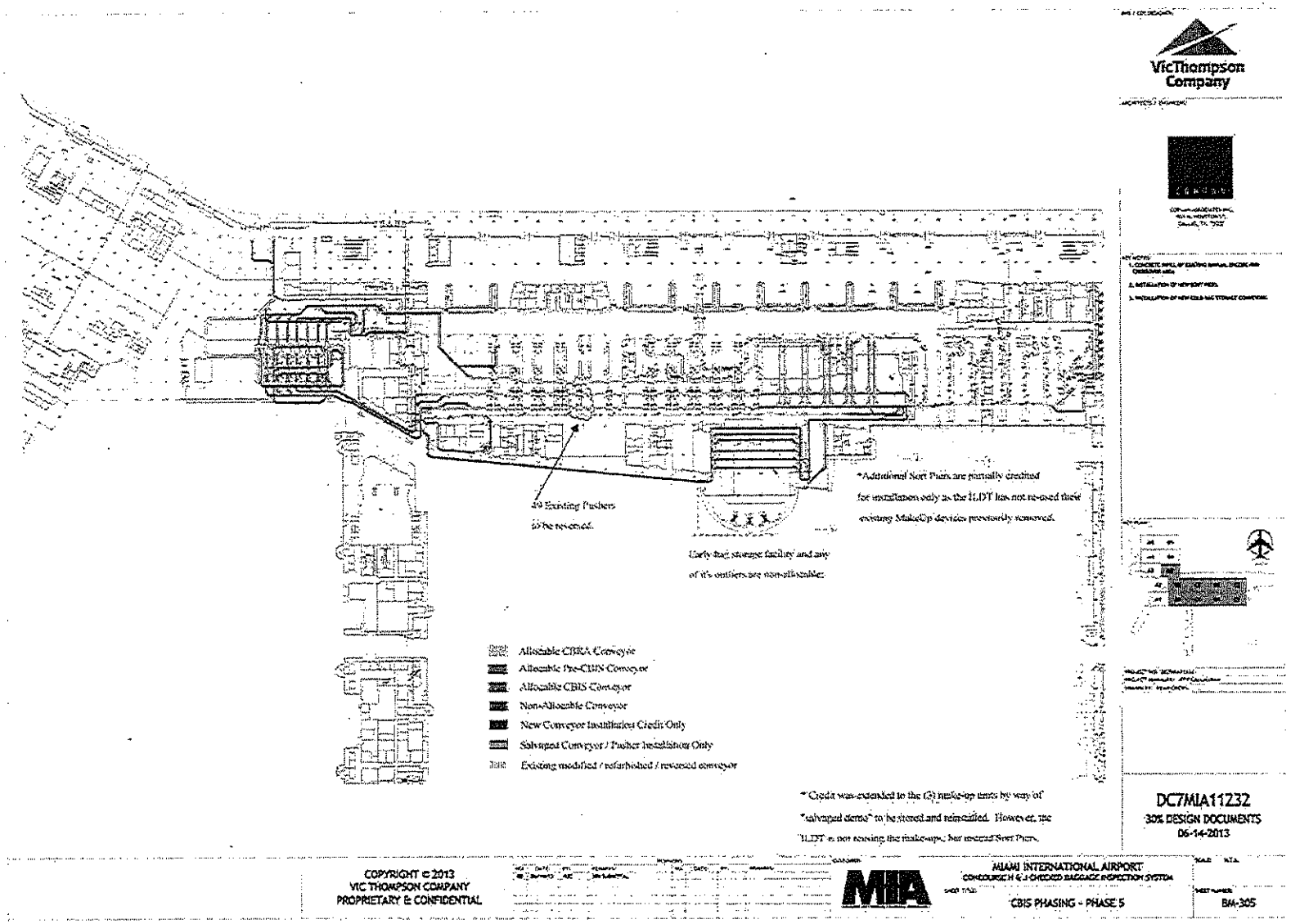
VicThompson Company
40 Existing Pushers to be removed.
Early bag storage facility and any of it's outliers are non-allocable.
*Additional Sort Pucks are partially credited for installation only as the HDT has not re-used their existing MakeUp devices previously removed.
Allocable CBRA Conveyor
Allocable Pre-CBIS Conveyor
Allocable CBIS Conveyor
Non-Allocable Conveyor
New Conveyor Installation Credit Only
Salvaged Conveyor / Pusher Installation Only
Existing modified / refurbished / reversed conveyor
* Credit was extended to the (3) make-up units by way of "salvaged items" to be stored and reinstalled. However, the HDT is not reusing the make-ups, but instead New Pucks.
DC7MIA11232
30% DESIGN DOCUMENTS
06-14-2013
COPYRIGHT © 2013
VIC THOMPSON COMPANY
PROPRIETARY & CONFIDENTIAL
MIA
MIAMI INTERNATIONAL AIRPORT
CONCOURSE H & J ENCODED BAGGAGE INSPECTION SYSTEM
CBIS PHASING - PHASE 5
BM-305

2. The cost of the security-related portion of the Project has been determined to be **$101,161,252** (CBIS Project Costs). TSA agrees to reimburse **MDAD 100%** for all of the allowable, allocable and reasonable CBIS Project Costs, including design and construction management in addition to construction costs but not to exceed a total reimbursement of **$101,161,252** (TSA Reimbursement Limit). TSA shall reimburse **MDAD** for every dollar submitted by **MDAD** for reimbursement of allowable, allocable and reasonable CBIS Project Costs up to the TSA Reimbursement Limit of **$101,161,252.**

3. TSA will determine allowable and allocable costs in accordance with the OMB Circular A-87 "Cost Principles for State, Local and Indian Tribal Governments" codified at 2 C.F.R. Part 225 (together with Appendices A – D) and Appendix F of the TSA PGDS. TSA will reimburse **MDAD** on an actual expense basis supported by one or more invoices submitted by **MDAD** in accordance with Article X "Payment." The parties understand and agree that all Project costs in excess of the TSA Reimbursement Limit of **$101,161,252**, as well as any costs that are inconsistent with OMB A-87 and the guidance set forth in the TSA PGDS, shall be borne solely by **MDAD** unless otherwise agreed by the TSA in a written modification in accordance with this Article IV and Article XIII "Changes and/or Modifications." Should the TSA reimbursements of **$101,161,252**, represent more than the final allowable and allocable, and reasonable CBIS Project Costs, **MDAD** will refund TSA sufficient funds such that TSA's total reimbursement will equal no more than the final allowable, allocable and reasonable CBIS Project Costs.

4. All costs requested for reimbursement must satisfy the requirements of both TSA's PGDS and OMB Circular A-87. In general, the costs for which TSA will provide reimbursement under this Agreement are limited to those costs associated with the CBIS area, the Checked Baggage Resolution Area (CBRA), and EDS network equipment room (if applicable to the CBIS Project) as defined in TSA's PGDS. Appendix F of the TSA's PGDS provides guidance regarding the reimbursable costs for TSA CBIS Projects.

A. Examples of costs commonly considered reimbursable under this Agreement include:
   - Soft cost allowances consisting of Design Fees, Project Management, Construction Management, Escalation, Design Contingency and Construction Contingency
   - Construction Costs:
     - Demolition
     - BHS infrastructure upgrades, platforms, catwalks located within the CBIS screening area.
     - BHS: The BHS portion located within the CBIS screening area, including redesign and upgrading of conveyors to support the integration of the EDS screening system.
     - Conveyor redesign and upgrade within the CBIS screening area.
     - Build out of the EDS network equipment room
     - Acoustical treatment in the CBRA area.
     - Heating, Ventilation, Air Conditioning (HVAC) to maintain equipment and employee environmental requirements for CBIS, CBRA and EDS network equipment room.
     - Electrical and communications infrastructure (cabling, control panels) and basic lighting fixtures for the CBIS and CBRA.

- Telephone systems/pager systems for TSA CBIS screening area.
- Basic architectural finishes.
- Removal of existing EDS Equipment upon recapitalization

Identification of cost classifications herein does not create any obligation on TSA's part beyond the requirements found in OMB Circular A-87 and TSA's PGDS.

B. Examples of costs not considered reimbursable include, but are not limited to:
   - Exterior Building Shell.
   - Baggage make-up carrousels or outbound sortation systems.
   - Maintenance, repair parts or spare parts (other than spare parts which are initially provided by the Original Equipment Manufacturer during the installation of new equipment) for airport terminal improvements including the baggage handling conveyor components installed under this Project.
   - Manual encoding consoles or stations.
   - Employee break rooms, administrative office space and restrooms not intended for the sole use of TSA staff.
   - Architecturally pleasing enhancements.
   - Extended warranties beyond one (1) year.

5. Change Orders shall not be considered authorization to exceed the TSA Reimbursement Limit unless **MDAD** submits to TSA prior written notification of the expected impact to the CBIS Project Cost and the corresponding impact to the TSA Reimbursement Limit, and the TSA agrees in writing to the proposed Change Order, including the proposed increase to the CBIS Project Cost and the TSA Reimbursement Limit. **MDAD** may not use the TSA contingency funds provided for the Project, as identified by TSA as part of this Agreement, without prior TSA written approval.

ARTICLE V: PROJECT RESPONSIBILITIES

The primary Project responsibilities of the TSA and **MDAD** are outlined below. In addition to primary Project Responsibilities, specific technical responsibilities for the two parties are contained in Appendix B, "Project and Acceptance Testing Requirements", attached hereto and incorporated by reference into this Agreement. The Project will be overseen by **MDAD**, except for those portions of the Project that are TSA's sole responsibility as set forth in this Agreement.

A. TSA Responsibilities

1. Provide the TSA's PGDS, as well as the EDS equipment specification upon request from the Airport.
2. Advise as to the type of EDS equipment to be provided at each Project design phase submission.
3. Furnish, deliver, install and test the EDS and ETD equipment.
4. Provide EDS Original Equipment Manufacturer Technical Support Advisory Services to the Airport regarding installation, integration and networking of the EDS units into the BHS.

5. Provide the CBIS System Specific Test Plan (SSTP) to the Airport for the commissioning, coordination and testing of the CBIS. See Appendix B for testing details. See Appendix B for further specifics relating to the TSA testing portion of the Project.
6. Establish and conduct the Integrated Site Acceptance Testing (ISAT) for the in-line CBIS performance capabilities with joint support from the Airport.
7. Review and approve ISAT results before the in-line CBIS is certified as ready for operational use.
8. Provide training for Transportation Security Officer personnel on the EDS equipment.
9. Evaluate the in-line CBIS in operation for 30 days after substantial use begins.
10. Review and consider requested changes submitted by the Airport to the CBIS design. Any changes in scope or associated costs must be approved in accordance with Article XIII "Changes and/or Modifications".
11. Provide maintenance, repair, and refurbishment to all TSA EDS and ETD equipment throughout its life cycle at no cost to **MDAD**.

B. MDAD Responsibilities

1. Except for the responsibilities of the TSA, as outlined above, the CBIS Project will be managed and overseen by **MDAD. MDAD**, acting through such contractors as it may engage, will provide the engineering and design services, as well as the associated construction and baggage handling system contractors, necessary for successful completion of the Project. **MDAD** will provide oversight of such contractor(s) to ensure the Project conforms to the TSA endorsed design, PGDS criteria and is completed within the prescribed costs and schedule identified and incorporated herein as Appendix B.
2. CBIS designs should be OSHA compliant; adhere to the applicable EDS and ETD installation and integration guide specifications; and should comply with all applicable Federal, State, and local building regulations. Provisions will be made in the CBIS design that will allow TSA and its contractors full ingress to and egress from the CBIS area for the installation, operation, testing, maintenance, and repair of the EDS and ETD equipment.
3. Obtain all necessary construction licenses, insurance permits and approvals.
4. **MDAD** shall deliver a firm EDS delivery schedule requirement date to TSA no later than 60 days after construction contract award. This schedule will be reviewed and approved by TSA based on OEM EDS delivery schedules. If project cannot meet the acceptance date, **MDAD** will be responsible for the safekeeping of the EDS in a secure and climate controlled environment until such time the system(s) can be installed at the agreed upon site. **MDAD** will be solely responsible for any damages and or extra startup costs associated with or that occur during this delay.
5. Ensure the Project site will be ready to accommodate the installation of the EDS units when delivered. Project site preparation includes, but is not limited to, BHS modifications, mechanical, heating, electrical site preparation, including infrastructure to protect electrical or fiber optic cables, environmental controls, and any other airport terminal infrastructure work required to support the operational environment of the EDS and ETD units.

6. Facilitate the installation of the EDS units by providing a clear path during rigging and EDS installation, and provide sufficient space to allow for initial deployment activities (such as uncrating the device).
7. Provide three (3) feet of maintenance access space around the equipment so that spare parts may be removed and replaced.
8. Once installed, provide reasonable measures to protect the EDS and ETD equipment from harm, theft, and water intrusion in the screening area.
9. Prior to TSA ISAT Testing, it shall be **MDAD** responsibility to exercise due diligence to protect and insure the EDS equipment from damage due to ongoing construction or weather.
10. The MDAD shall provide for personnel, assistance, equipment and support services to jointly execute the Test Readiness Review (TRR) and ISAT leading to the commissioning and acceptance of the CBIS. Support will include but not be limited to:
    a. Test bag laydown and storage areas secure and protected from the elements.
    b. Baggage handlers for test bag staging, induction and retrieval during testing and commissioning including personnel and equipment necessary to move test bags between staging and ISAT areas.
    c. Ensure representatives of the Baggage Handling System Contractor (BHSC), and System Programmer(s) are on site to run the CBIS during ISAT and resolve deficiencies found during testing.
    d. Airport badging required for TSA contractor ISAT team members shall be executed in a timely manner such that no greater than two (2) trips to the airport are necessary to complete all badging requirements to be issued and receive an airport badge. Should this requirement not be met, the Airport/ILDT shall provide all escorts necessary to allow the TSA ISAT Team to conduct the ISAT and follow-on live operations run-in observation.
    e. Provide TSA and their Contractors full and complete most recent documentation of the project to include "approved for Construction" sets of the mechanical, electrical and controls drawings and control descriptions, see Appendix B for details.
11. Perform and bear all cost of the operation, maintenance and repairs for the airport terminal installed property such as the baggage handling conveyor system, including the conveyors in the baggage screening matrix, heating, air conditioning, electrical and mechanical infrastructure in support of this Project.
12. Submit monthly milestone and project progress status reports by the 10th of each month to the TSA Regional Deployment Coordinator (RDC), TSA Site Lead Contractor and TSA Contracting Officer. Specific requirements for the content of the monthly project status report are identified in Appendix D.
13. CBIS designs and construction shall meet all requirements of the TSA Security Technology Integrated Program (STIP) Data Requirements for Checked Baggage Systems as shown in Appendix E. The Airport shall provide all deliverables required in the STIP Data Requirements to the TSA RDC.

For additional clarification regarding roles and responsibilities see Appendix B.

C. Operation and Maintenance Costs

It is understood and agreed that the EDS and ETD security screening equipment are and will at all times remain the property of the TSA. TSA will maintain, repair, and refurbish the EDS and ETD units at no cost to **MDAD.**

Except for the EDS and ETD security screening equipment owned by the TSA and separately provided for use at the Airport, **MDAD** shall own and have title to all airport terminal building improvements made in accordance with this Agreement such as heating, ventilation, air conditioning, electrical and mechanical infrastructure, baggage handling conveyor systems and controls, or other assets which are acquired and installed under this Agreement in support of this Project. It will remain the responsibility of **MDAD,** its contractors or lessees acting through such agents as it may use, to maintain, repair and or replace such airport property to sustain the operational environment of the EDS and ETD security screening equipment. Title to all airport terminal building improvements that were purchased or reimbursed using Federal funds for this Project, shall become the property of **MDAD,** whether purchased with TSA, or **MDAD** funds.

D. Deliverables
Appendix E identifies other required deliverables to be submitted by **MDAD.**

ARTICLE VI - EFFECTIVE DATE AND TERM

A. CONSTRUCTION

The term of this Agreement shall be from the date of execution of the Agreement until **September 1st, 2018,** unless earlier terminated by the parties pursuant to Article XV "Termination" as provided herein or extended by mutual agreement pursuant to Article XIII "Changes and/or Modifications", in order to allow **MDAD** time to submit a final invoice, close out the Project, and address any other issues.

MDAD will establish and provide same to the TSA Regional Deployment Coordinator (RDC) and TSA CO within 30 days of execution of this Agreement, Project Milestones that allow objective measurement of progress toward completion. TSA maintains the right to identify any additional Project Milestones to be tracked by **MDAD.**

ARTICLE VII - ACCEPTANCE AND TESTING

TSA will deem the CBIS-related portion of the Project complete upon successful results of the TSA ISAT (Integrated Site Acceptance Test) as conducted by the TSA independent Acceptance Test Contractor and successful completion of the 30-day Operational Run-In period. TSA ISAT will evaluate the CBIS against the TSA PGDS version stated in this Agreement as well as assess and comment on functional and performance differences to the most current version of the PGDS version published at the time of ISAT.

Successful completion of Project requires the correction of CBIS deficiencies identified during the TSA ISAT as documented in the Quick Look Report (QLR) and as followed up at the end of the Operational Run-In period in the Test Summary Report (TSR). TSA will release the funds retained pursuant to Article X only after the CBIS has passed the ISAT test and Operational Run-In period and the deficiencies have been corrected. Additional details are contained in Appendix B, "Project and Acceptance Testing Requirements"

ARTICLE VIII - AUTHORIZED REPRESENTATIVES

The authorized representative for each party shall act on behalf of that party for all matters related to this Construction Agreement. Each party's authorized representative may appoint one or more personnel to act as an authorized representative for any administrative purpose related to this Construction Agreement, provided written notice of such appointment is made to the other party to this Construction Agreement. The authorized representatives for the parties are as follows:

A. TSA Points of Contact:

Regional Deployment Coordinator/Contracting Officer's Representative:
John Reed
Mail Stop TSIF #32
Transportation Security Administration
1 Post Office Road
Washington, DC 20528-6032
Phone: 571-227-1563
E-Mail: john.reed1@dhs.gov

Contracting Officer:
Matthew Ashurst
701 South 12th Street
Arlington, Va. 20598
Phone: 571-227-5376
E-Mail: matthew.ashurst@dhs.gov

Only the TSA Contracting Officer (CO) shall have the authority to bind the Federal government with respect to scope of work, funding and liability. The TSA Regional Deployment Coordinator (RDC) is also the TSA Contracting Officer Representative (COR) and is responsible for the technical administration of this Construction Agreement and technical liaison with the MDAD. The TSA COR is not authorized to change the scope of work, to make any commitment or otherwise obligate the TSA, or authorize any changes which affect the liability of the TSA such as amount or level of funding.

The MDAD must notify the TSA CO and COR in the event that any TSA employee or TSA contracted agent takes any action that may be interpreted by the MDAD as direction which could increase the Construction Project costs and could cause the MDAD to seek reimbursement from TSA in excess of the TSA's total reimbursement liability as defined in Articles IV and IX of this Construction Agreement.

B. MDAD Points of Contact:

Lauren Stover
Assistant Director for Public Safety and Security
Miami-Dade Aviation Department
P.O. Box 025504
Miami, Florida 33166

Phone: 305-876-7017
Email: lstover@miami-airport.com

Technical Representative/Project Manager:
Debra Shore
Senior Cost Manager- Program Controls
Phone: 305-869-4585
Email: dshore@miami-airport.com

ARTICLE IX - FUNDING AND LIMITATIONS

TSA will provide funding to **MDAD** in an amount not to exceed **$101,161,252** (TSA Reimbursement Limit). Funds in the amount of **$101,161,252** are hereby obligated and made available for payment for performance of this Agreement. Expenses incurred in executing the work identified herein are chargeable to:

PR: 2113203CT1147
Accounting Line:
5CF13XB010D2013SWE044GE01372300620062 2CTO/59030011120100 00/251B/TSA DIRECT/DEF. TASK
$86,622,702.00
5CF12XB010D2013SWE044GE01372300620062 2CTO/59030011120100 00/251B/TSA DIRECT/DEF. TASK
$14,538,550.00

Amount: **$101,161,252**

In the event of termination or expiration of this Agreement, any TSA funds that have not been spent or incurred for allowable expenses prior to the date of termination and are not reasonably necessary to cover allowable and allocable costs as of the date of termination will be returned and/or de-obligated from this Agreement. TSA's liability to make payments to **MDAD** is limited to the funds obligated and available for payment hereunder, including written modifications to this Agreement.

Under no circumstances will TSA be responsible to reimburse **MDAD** for profit or the general costs of government. **MDAD** may recover the allowable direct costs of **MDAD** personnel performing work necessary under this Agreement, as well as the allowable and allocable costs of the contractors hired by **MDAD** to perform the necessary work under this Agreement. Profit and overhead costs for **MDAD** contractors performing work on the Project are allowable costs. Submission of a cost allocation plan is required to address any indirect costs, to include **MDAD** employees, who work on multiple activities that will result in a request for reimbursement under this Agreement. TSA will not be responsible for costs incurred by **MDAD**, its contractors or agents to perform work not in compliance with the TSA requirements in this Agreement. The TSA CO has the right to recoup any payments made to **MDAD** if the TSA CO determines that the invoices exceed the actual costs incurred, or if the work substantially deviates from the TSA approved CBIS design requirements for the Project pursuant to this Agreement.

TSA will reimburse only for allowable, allocable and reasonable costs in accordance with the OMB Circular No. A-87 in effect on the Effective Date of the Agreement (codified at 2 C.F.R. Part 225) and the allowable/not-allowable costs identified in Appendix F of TSA's PGDS.

ARTICLE X – PAYMENT

The United States Coast Guard Finance Center performs the payment function on behalf of the TSA. For purposes of submission to the Coast Guard Finance Center, the MDAD must submit a completed Summary Invoice. Registration in the System for Award Management (SAM) is mandatory for invoice payment. To obtain information regarding SAM, please refer to https://www.sam.gov/portal/public/SAM/.

Invoices for reimbursable expenses will be submitted every thirty (30) days, as expenses are incurred. For periods in which the MDAD has not incurred a reimbursable expense, an invoice is not required. Expenses are considered to accrue on the date that the MDAD is invoiced from a contractor, sub-contractor, supplier, or provider of services. Reimbursement by TSA is conditioned upon submission to TSA of an invoice identifying the Design Project costs that have been incurred and paid. The TSA intends to make payment to the MDAD within 120 days from receipt of each properly prepared invoice for reimbursement of incurred Design Project costs.

Ten percent (10%) of all submitted costs identified by TSA as allowable, allocable and reasonable shall be retained by TSA until completion of the Project, and shall only be reimbursed to **MDAD** upon successful completion of all of its obligations under this Agreement, including, completed system documentation submitted to TSA and successful completion of all testing as required in Article VII of this Agreement.

In the event that an invoice for reimbursable expenses is not received by the TSA within a twelve (12) month period, the TSA reserves the right to terminate the Construction Agreement per Article XV "Termination."

The TSA reimbursement process consists of two steps.

Step 1 – Summary Invoice Submittal to the U.S. Coast Guard Finance Center for Payment, and at a minimum should contain the following information:

(1) Construction Agreement Number:HSTS04-13-H-CT1147
(2) Invoice Number and Invoice Date
(3) Complete Business Name and Remittance Address
(4) Point of Contact with address, telephone, fax and e-mail address
(5) Tax Identification Number and DUN's Number
(6) Dollar Amount of Reimbursement requested
(7) Signature of the MDAD's authorized representative and the following certification language: *"This is to certify that the services set forth herein were performed during the period stated and that the incurred costs billed were actually expended for the Project."*

The Summary Invoice may be submitted by standard mail or by electronic transmission to the following address(s):

Mailing Address: TSA Commercial Invoices
USCG Finance Center
P.O. Box 4111
Chesapeake, VA 23327

Email: FIN-SMB-TSAINVOICES@uscg.mil

Step 2 – Submission of Summary Invoice and Supporting Documentation Submittal to TSA for Approval of Payment:

The TSA CO and the COR are required to review and the TSA CO will approve all invoices prior to payment. To aid in this review, the MDAD shall provide a copy of the Summary Invoice along with all receipts, contractor pay requests and other supporting information which specify the vendor, services provided, and products delivered as well as the appropriate documentation that the MDAD has paid these obligations. The MDAD should provide this supporting information simultaneously with Step 1 to expedite the payment process.

The Support Documentation should contain the following items:

- Summary Invoice from Step 1
- An executive summary project overview with the first invoice
- A summary spreadsheet providing a categorized breakdown of the amount invoiced
- Signed, approved and legible copies of each individual contractor's invoice to include schedules of values scope of work
  - Copies of contracts and change orders that provide support for the actual work being invoiced
  - Vendor and subcontractor invoices with specific details about services provided
  - Rationale for all allocations or unusual calculations or assumptions
  - Copies of subcontractor's invoices if listed on a prime contractor's invoice as a single amount (copies of timesheets and detailed backup not required if descriptions are clear and specific)
- Proof of payment by the MDAD for each invoice in the form of copies of check/warrants, bank wire transfers, or accounting systems transactions

The Summary Invoice and supporting documentation may be submitted by email or mail via CD or paper documents to the below addresses. The final closeout invoice should include proof that all required deliverables have been provided.

John Reed
Mail Stop TSA TSIF - #32
Transportation Security Administration
1 Post Office Way
Washington, D.C. 20528-6032
Email: OSTCBD @tsa.dhs.gov

Matthew Ashurst, TSA CO
C/O Mr. Henry Edquist
Faithful & Gould
1725 Duke Street, Suite #200
Alexandria, VA 22314
Phone: 571-403-8777
Email: Henry.Edquist@fgould.com

Upon completion of the review of the supporting documentation for the Summary Invoice, the TSA CO and the TSA RDC/COR will advise the Coast Guard Finance Center regarding payment

of the Summary Invoice.

TSA may pay any charges due under this Agreement by electronic funds transfer, check, or other means. Any charges due under this Agreement shall be due in arrears and, to the extent appropriated funds are available, shall be paid within 120 days of TSA's receipt of a proper invoice from the MDAD The Prompt Payment Act, 31 U.S.C. §§ 3901-06, as implemented at 5 CFR 1315, applies to payments made under this Agreement. The Government will compute the interest penalty in accordance the Office of Management and Budget prompt payment regulations at 5 CFR Part 1315.

ARTICLE XI - AUDITS

The Federal Government, including the Comptroller General of the United States, has the right to examine or audit relevant financial records for a period not to exceed three (3) years after expiration of the terms of this Construction Agreement. The MDAD and its contractors must maintain an established accounting system that complies with generally accepted accounting principles. Records related to disputes arising out of this Construction Agreement shall be maintained and made available until such disputes have been resolved. As used in this paragraph, "records" includes books, documents, accounting procedures and practices, and other data, regardless of type and regardless of whether such items are in written form, in the form of computer data, or in any other form related to this Construction Agreement.

The MDAD shall maintain all records and other evidence sufficient to reflect costs claimed to have been incurred or anticipated to be incurred directly or indirectly in performance of this Construction Agreement. The TSA CO or the authorized representative of the TSA CO shall have the right to examine and audit those records at any time, or from time to time. The right of examination shall include inspection at all reasonable times at the offices of the MDAD or at the offices of the MDAD's contractor(s) responsible for the Construction Project. The MDAD will be required to submit cost or pricing data and supporting information in connection with any invoice relating to this Construction Agreement if requested by the TSA CO.

This Article XI shall not be construed to require the MDAD or its contractors or subcontractors to create or maintain any record that they do not maintain in the ordinary course of business pursuant to a provision of law, provided that those entities maintain records which conform to generally accepted accounting practices.

The MDAD shall insert a clause containing the terms of Article XI – Audits in all of its contracts and subcontracts under this Construction Agreement that exceed $100,000.00 (One Hundred Thousand Dollars).

ARTICLE XII – REQUIRED FEDERAL PROCUREMENT PROVISIONS

Competition in the award of contracts or procurements resulting from this Construction Project is strongly encouraged and the **MDAD** should promote competition to the maximum extent practicable. The **MDAD** may follow its local procurement requirements for this Construction Agreement. The **MDAD** agrees to include in its contract(s) a provision that the designs for this Construction Project are required to comply with the TSA's PGDS.

ARTICLE XIII – CHANGES AND/OR MODIFICATIONS

Changes and modifications to this Construction Agreement shall be in writing and signed by the TSA CO and duly executed by the authorized representative of **MDAD**. Any modification shall cite to this Construction Agreement and shall state the exact nature of the change and/or modification. No oral statement by any person shall be interpreted as modifying or otherwise affecting the terms of this Construction Agreement. The properly signed written modification shall be attached to this Construction Agreement and thereby becomes a part of this Construction Agreement.

ARTICLE XIV – DISPUTES

When possible, disputes will be resolved by informal discussion between the parties. All disputes arising under or related to this Construction Agreement shall be resolved under this Article. Disputes, as used in this Construction Agreement, mean a written demand or written assertion by one of the parties seeking, as a matter of right, the adjustment or interpretation of Construction Agreement terms, or other relief arising under this Construction Agreement. The dispute shall be made in writing and signed by a duly authorized representative of **MDAD** or the TSA. At a minimum, a dispute under this Construction Agreement shall include a statement of facts, adequate supporting data and a request for relief. In the event that the parties are unable to resolve any disagreement through good faith negotiations, the dispute will be reviewed and adjudicated by the TSA Assistant Secretary or his or her designee. If a party disagrees with the decision of the TSA Assistant Secretary or his or her designee, they may pursue other available legal remedies.

ARTICLE XV – TERMINATION

In addition to any other termination rights provided by this Construction Agreement, either party may terminate this Construction Agreement at any time prior to its expiration date, with or without cause, and without incurring any liability or obligation to the terminated party (other than payment of amounts due and performance of obligations accrued, in each case on or prior to the termination date) by giving the other party at least thirty (30) days prior written notice of termination. Upon receipt of a notice of termination, the receiving party shall take immediate steps to stop the accrual of any additional obligations that might require payment.

In the event of termination or expiration of this Construction Agreement, any TSA funds that have not been spent or incurred for allowable expenses prior to the date of termination and are not reasonably necessary to cover termination expenses will be returned and/or de-obligated from this Construction Agreement.

ARTICLE XVI – CONSTRUCTION OF THE AGREEMENT

This Construction Agreement is an "other transaction" issued under 49 U.S.C. § 106(l) and 114(m)(1) and is not a procurement contract, grant or cooperative agreement. Nothing in this Construction Agreement shall be construed as incorporating by reference or implication any provision of Federal acquisition law or regulation. It is not intended to be, nor shall it be construed as creation of a partnership, corporation, or other business entity between the parties.

Each party acknowledges that all parties hereto participated equally in the negotiation and drafting of this Construction Agreement and any amendments thereto, and that, accordingly, this Design/Construction Agreement shall not be construed more stringently against one party than against the other.

This Construction Agreement constitutes the entire agreement between the parties with respect to the subject matter hereof and supersedes all prior agreements, understandings, negotiations and discussions, whether oral or written, of the parties.

In the event that any Article and/or parts of this Construction Agreement are determined to be void or otherwise invalid or unenforceable, such Article or portions thereof shall lapse. No such lapse will affect the rights, responsibilities, and obligations of the parties under this Construction Agreement, except as provided therein. If either party determines that such lapse has or may have a material effect on the performance of the Construction Agreement, such party shall promptly notify the other party, and shall negotiate in good faith a mutually acceptable amendment to the Construction Agreement if appropriate to address the effect of the lapse.

ARTICLE XVII - PROTECTION OF INFORMATION

The parties agree that they shall take appropriate measures to protect all proprietary, privileged, confidential, or otherwise Sensitive Security Information (SSI) that may come into their possession as a result of this Construction Agreement.

A. RELEASE OF TECHNICAL DATA

No Sensitive Security Information (SSI), as defined in 49 CFR Parts 15 and 1520, concerning the scope of this Construction Agreement, shall be published or released to the public without prior written approval of the TSA Assistant Secretary or his or her designee. Guidance regarding SSI may be found in Appendix G, Checked Baggage Screening Equipment Sensitive Security Information Identification Guide", of the TSA PGDS.

B. RECORDS AND RELEASE OF INFORMATION

All Sensitive Security Information (SSI), as defined in 49 CFR Part 1520, shall be handled in accordance with TSA policies and regulations. All employees, contractors, and subcontractors assigned to work under this Construction Agreement are subject to the provisions of 49 CFR Part 1520, Protection of Sensitive Security Information, because they act for, or carry out duties for, or on behalf of the TSA. SSI may not be disclosed except in accordance with the provisions of that rule or where TSA otherwise approves.

C. MEDIA

Neither the MDAD, nor its contractors shall include in its publicity or public affairs activities related to the subject matter of this Construction Agreement any SSI unless written approval has been received from the TSA Office of Security Capabilities or the TSA Office of Strategic Communication and Public Affairs. The purpose of this provision is to preclude the inadvertent release of SSI to the general public.

ARTICLE XVIII - SURVIVAL OF PROVISIONS

The following provision of this Construction Agreement shall survive the termination of this

Construction Agreement: Article IV – Cost Sharing and Other Responsibilities; Article IX – Funding and Limitations; Article XI – Audits; Article XII – Required Federal Procurement Provisions; Article XIV – Disputes, Article XVII – Protection of Information and Article XVIII – Survival of Provisions.

IN WITNESS WHEREOF, the Parties have entered into this Construction Agreement by their duly authorized officers this 19th day of SEPTEMBER, 2013.

U. S. Department of Homeland Security
Transportation Security Administration

Matthew C. Ashurst
TSA Contracting Officer

092613
Date

MIAMI DADE AVIATION DEPARTMENT

Emilio T. González
Aviation Director

19 SEPTEMBER 2013
Date

Appendix A
TSA Planning Guidelines and Design Standards
Design Deliverables Checklist

Figure 2-4
DELIVERABLES CHECKLIST

PROJECT PHASE DELIVERABLES	Section	10%	30%	70%	100%	Comments
Pre-Design Phase						
Preliminary Alternatives Analysis Report	2.2.1	☐	☐		☐	
Preferred Alternatives Analysis Report				☐		
Schematic Design Phase						
Basis of Design Report	2.2.2	☐	☐	☐	☐	
Detailed Program Requirements		☐	☐	☐	☐	
High-Level Flow-Based Modeling Assumptions and Results		☐	☐	☐	☐	
Preliminary Concept Plans		☐	☐	☐	☐	
Phasing and Constructability Technical Memorandum		☐	☐	☐	☐	
BSM Estimate of Probable Construction and O&M Costs		☐	☐	☐	☐	
Stakeholder Review and Approval Documentation		☐	☐	☐	☐	
Preliminary Project Schedule		☐	☐	☐	☐	
Detailed Design Phase	2.2.3	☐	☐	☐	☐	
30% Design Submittals	2.2.3.1	☐	☐	☐	☐	
Updated Basis of Design Report		☐	☐	☐	☐	
Operational Standards Assessment		☐	☐	☐	☐	
Preliminary Plans		☐	☐	☐	☐	
Cross Sections		☐	☐	☐	☐	
Description of Operations		☐	☐	☐	☐	
Baggage and Data Flow Charts		☐	☐	☐	☐	
Table of Contents for OBS		☐	☐	☐	☐	
Screening Equipment Installation Guidelines		☐	☐	☐	☐	
Outline of Reporting Capabilities		☐	☐	☐	☐	
Stakeholder Review and Approval Documentation		☐	☐	☐	☐	
30% Estimate of Probable Construction and O&M Costs		☐	☐	☐	☐	
Preliminary Phasing Schedule		☐	☐	☐	☐	
Comment Manifest		☐	☐	☐	☐	
EDS Equipment List	2.2.3.2	☐	☐	☐	☐	
70% Design Submittals		☐	☐	☐	☐	
Updated Basis of Design Report		☐	☐	☐	☐	
Updated Operational Standards Assessment		☐	☐	☐	☐	
70% Design Drawings		☐	☐	☐	☐	
Cross Sections		☐	☐	☐	☐	

PROJECT PHASE DELIVERABLES (continued)	Section	10%	30%	70%	100%	Comments
Detailed Design Phase (continued)						
70% Design Submittals (continued)						
Description of Operations		☐	☐	☐	☐	
Preliminary Contingency Plan		☐	☐	☐	☐	
70% Specifications		☐	☐	☐	☐	
Draft Site Specific Configuration Management Plan		☐	☐	☐	☐	
Stakeholder Review and Approval Documentation		☐	☐	☐	☐	
70% Estimate of Probable Construction and O&M Costs		☐	☐	☐	☐	
Phasing Schedule		☐	☐	☐	☐	
Comment Manifest		☐	☐	☐	☐	
Updated EDS Equipment List		☐	☐	☐	☐	
100% Design Submittals	2.2.3.3	☐	☐	☐	☐	
Bid Documents		☐	☐	☐	☐	
Final Description of Operations		☐	☐	☐	☐	
Contingency Plans		☐	☐	☐	☐	
Project Specifications		☐	☐	☐	☐	
Final Site Specific Configuration Management Plan		☐	☐	☐	☐	
Stakeholder Review and Approval Documentation		☐	☐	☐	☐	
Final Estimate of Probable Construction and O&M Costs		☐	☐	☐	☐	
Final Phasing Schedule		☐	☐	☐	☐	
Updated EDS Equipment List		☐	☐	☐	☐	
Operations Training Materials and Documentation		☐	☐	☐	☐	
Construction Phase	2.2.4	☐	☐	☐	☐	
Changes to Approved 100% Design Submittals		☐	☐	☐	☐	
Construction Schedule		☐	☐	☐	☐	
Courtesy Copies of Shop and Installation Drawings		☐	☐	☐	☐	
Testing and Commissioning Phase	2.2.5	☐	☐	☐	☐	
Pre-ISAT Documentation		☐	☐	☐	☐	
ISAT Documentation		☐	☐	☐	☐	
Project Closeout Phase	2.2.6	☐	☐	☐	☐	
As-built OBS Documentation Submittal		☐	☐	☐	☐	
Final Copy of the PLC Program with Drawings		☐	☐	☐	☐	
Final Copy of Disaster Recovery Procedures		☐	☐	☐	☐	

Appendix B
Project and Acceptance Testing Requirements

Scope: TSA support for the in-line Checked Baggage Inspection System (CBIS) solution at the **MIAMI DADE AVIATION DEPARTMENT** will encompass design, construction and commissioning to support the in-line CBIS.

A. TSA responsibilities with regard to the Project are listed below in sections 1.1 to 1.7. Many responsibilities are delegated to TSA contractors such as the EDS Original Equipment (OEM) Manufacturer, TSA Site Lead Contractor, and TSA Acceptance Test Contractor but ultimate responsibility resides with TSA.

1.1 EDS PLACEMENT

If applicable, TSA will ship, rig and install EDS machines and associated EDS screening equipment, to include any necessary ETD screening equipment, in their respective operational locations within the CBIS Project location. TSA, through the EDS OEM or other TSA contractors, shall be responsible for coordinating and integrating activities regarding placement of EDS equipment with the local TSA Point of Contact and Airport Point of Contact.

1.2 INSTALLATION SUPPORT

1.2.1 Project Management

As applicable, the TSA Site Lead Contractor and the EDS OEM shall be responsible for providing technical support throughout the entire period of performance during the installation Project. The OEM shall be responsible for all labor, materials, equipment, and support services required for planning, managing, and supervising all items related to the installation of the EDS units and associated ancillary equipment.

1.2.2 Technical Support

TSA will provide technical support to the Project through existing TSA contracts with the EDS OEM, TSA Site Lead Contractor, and TSA Acceptance Testing Contractor.

- The identified TSA Site Lead Contractor should be included in all relevant CBIS planning/project meetings relevant to TSA contributions to the Project. Project schedules and updates should be provided to the TSA Site Lead Contractor to ensure TSA has timely and sufficient notice of deliverable dates. The TSA Site Lead Contractor will assess the project progress against the project schedule and approved design to advise TSA of issues related to cost, schedule and/or performance impacts to the in-line project.

- The EDS OEM shall provide technical consultations to the TSA Regional Deployment Coordinator (RDC), TSA Site Lead Contractor, TSA Acceptance Test Lead, TSA Acceptance Testing Contractor and Airport regarding Project efforts that may include, but are not limited to: teleconferences; reviews of drawings and specifications; and exchanges of technical documentation such as specifications, manuals, and guides.

- TSA Acceptance Testing Contractor shall support ISAT of the CBIS (the EDS units, BHS and the integration between them) and will develop relevant CBIS test plans and reports that will be shared with the Airport.

- Support for the development and execution of the TSA Other Transaction Agreement in place between TSA and the **MDAD** will be provided by TSA Office of Acquisition.

- Oversight and coordination of technical aspects of the Project will be provided by the TSA Regional Deployment Coordinator.

- Local TSA personnel shall support coordination of issues between TSA Regional Deployment Coordinator (RDC) and the Airport as directed by the Federal Security Director (FSD).

1.2.3 Commissioning Services

TSA, through the EDS OEM and its other TSA contractors, shall be responsible for all labor, materials, equipment, and support services needed to assemble, power up, configure, and install the EDS machines into the required operational condition. The EDS OEM shall provide technical support, documentation, and installation of the EDS units and the associated local Baggage Viewing Stations (BVS) after confirmation that all pre-installation requirements have been met. The EDS OEM shall coordinate with the TSA RDC, TSA Site Lead Contractor, TSA Acceptance Test Lead, and the Airport to perform system testing.

1.3 Acceptance Testing

Mandatory testing for this system includes Site Acceptance Testing (SAT) for the EDS units following installation; pre-Integrated Site Acceptance Testing following the integration of the EDS units with the BHS is affirmed through a Test Readiness Review (TRR) and Test Readiness Notice (TRN); and Integrated Site Acceptance Testing (ISAT) is conducted prior to TSA acceptance of the CBIS system for operational use. TSA may elect to oversee BHS pre-ISAT conduct to confirm readiness of the system and conduct the TRR within the timeline of the ISAT to reduce the overall testing timeline. See the following table for minimum lead time requirements for testing activities.

Table 1. ISAT Timeline

Lead Times for ISAT (Days Prior to projected test date)	**Activity**	**Responsible Parties**
Site Initiation or ≥180 days from ISAT	Site Survey Data Collection Checklist provided to the ILDT to complete to support the ISAT Site Specific Test Plan (SSTP) development.	TSA RDC, TSA Site Lead Contractor
≥120 days	Completed Site Survey Data Collection Checklist and supporting site documentation received by TSA Acceptance Test Contractor	ILDT, TSA Site Lead Contractor

	from TSA Site Lead Contractor, to include: • Any and All Approved Request for Variance (RFV) • Basis of Design Report • Sample BHS & CBIS Reports for all PGDS required Reports • BHS & EDS Network Diagrams and Server Architecture • Local Procedures for Fail-Safe, E-Stop, Jam Clearing and IQ Test Conduct • Airport/Airline Bag Induction/Hygiene Procedures • BHS Specifications • Controls Description and/or Description of Operation (if both exist then provide both) • Fail-safe and/or E-Stop Zone Drawings • BHS Mechanical Plan and Elevation Drawings from Natural Induction Locations to & through the CBIS, CBRA and Make-up Locations with Conveyors labeled, Plan View Drawings and Electrical Drawings of the BHS/CBIS with Control Station & Photoeye Locations and labeling. All drawings will be "Approved for Construction" by the Airport and not Pre-Bid or Bid Use Only versions. • At least 1 Plan/OverView Drawing that shows the entire CBIS in a single view • Conveyor Motor Manifest to include not less than (Conveyor Name, Phase, Conveyor Type, Degree of Turn, Degree of Incline/Decline, Length, Speed in FPM, Motor HP, Control Type (VFD yes/no), Brake Type, Motor Type, drive Type, FLA Rating). • Installation & Commissioning Phasing Plan Narrative and Phasing Plan Drawings • Construction and Testing Schedule(s)	
≥90 days	On-site Site Survey Meeting held. to conduct initial test coordination and review the draft SSTP. This visit will allow the TSA Acceptance Test Contractor to tour the site,	ILDT, TSA RDC, TSA Site Lead Contractor, TSA Acceptance

	review the draft SSTP with the ILDT, coordinate logistics and manpower and initiate the SIDA badge application process, if required. TSA Site Lead Contractor coordinates schedule with the ILDT and TSA's Acceptance Test Contractor.	Test Contractor
≥45 days	Final SSTP Review Meeting between the TSA Acceptance Test Contractor and the ILDT to review the final SSTP, include any other approved RFV, verify logistics & manpower, and review specific tests to be performed. Any requests for variance from the SSTP testing requirements must be delivered in writing to the TSA RDC prior to this meeting for review and response. This is the last chance for the ILDT to disclose any test standards that cannot be met in writing and formally justify exemption from test criteria. Any final revisions to the SSTP will be made and distributed to the ILDT and RDC prior to test execution.	ILDT, TSA Site Lead Contractor, TSA Acceptance Test Contractor, TSA RDC
Typically 14 days to 1 day	TSA Acceptance Test Contractor will ship test articles to the ILDT. The ILDT receives the test articles and stores in a secure and weather protected laydown area as agreed to by the ILDT and TSA Acceptance Testing Contractor in the Final SSTP Review Meeting.	ILDT, TSA Acceptance Test Contractor
≥11 business days	CBIS pre-testing - The ILDT conducts pre-testing. The TSA Site Lead contractor will provide oversight of CBIS pre-testing to validate the Test Readiness Notification (TRN) to the TSA RDC and Acceptance Test Team. The ILDT delivers internal pre-ISAT test results to the TSA Site Lead Contractor and the Site and TRR readiness confirmation letter to the TSA RDC and Acceptance Test Team. Upon successful review, the TSA Site Lead Contractor is deployed to the site within 7 days. Note: TSA may combine TRN with CBIS pre-testing and/or conduct TRR as a subset of ISAT	ILDT, TSA Site Lead Contractor
≥7 business days	TSA Acceptance Testing Contractor or Site Lead Contractor initiates & performs the	ILDT, TSA Site Lead Contractor

	TRR. Note: TRR Performance by Acceptance Testing Contractor will be a subset of overall ISAT duration and permit passed tests to be credited toward ISAT completion. TRR failure will result in 2 week moratorium.	
≥3 business days	When notice of successful TRR is completed and delivered to the TSA Acceptance Testing Contractor via a TRN no later than COB Wednesday (5:00 p.m. EST), ISAT deployment will occur the following Monday. If delivered any time Thursday through Sunday, the TSA Test Team deployment will occur on the second Monday.	TSA Site Lead Contractor, TSA Acceptance Test Contractor
1 business days	TSA Acceptance Test Contractor travel day (normally Monday)	TSA Acceptance Test Contractor
Test start	TSA Acceptance Test Contractor travel day (normally Monday) with mobilization activities and an in-brief meeting with ILDT on the next business day. Prior to start of testing, TSA Acceptance Test Contractor will accept PLC code from TSA Site Lead Contractor or ILDT prior to the start of testing. TSA Acceptance Test Contractor and ILDT will work together to perform ISAT and collect BHS and EDS performance documentation. Prior to departing the site, an Out-brief meeting will be held for all site stakeholders.	ILDT, TSA Acceptance Test Contractor, TSA Site Lead Contractor
≤2 business days after ISAT complete	QLR is submitted by the TSA Test Acceptance Contractor to the TSA Acceptance Test Lead and RDC for review and approval	TSA Acceptance Test Contractor, TSA Acceptance Test Lead, TSA RDC
X business days after QLR receipt	TSA conducts ISAT review board based on QLR results to determine readiness of CBIS to enter Live Operations and Bag Screening or whether to return CBIS to ILDT for correction of deficiencies prior to Live Operations	TSA RDC, TSA Acceptance Test Lead,
5 business days after ISAT review board decision	QLR is distributed by the TSA Deployment RDC	TSA RDC
For 30+ days from	The TSA Acceptance Test Contractor	ILDT, TSA

start of substantial use	remotely monitors system performance during live operations run-in period and observes system on-site for 3+ days	Acceptance Test Contractor, TSA Test Lead
5 business days following completion of data collection and onsite observation for run-in	The TSA Acceptance Test Contractor provides a Test Summary Report (TSR) to the TSA Acceptance Test Lead and RDC for review and approval.	TSA Acceptance Test Contractor, TSA RDC, TSA Acceptance Test Lead
5 business days	RDC distributes TSA approved TSR to ILDT	ILDT, TSA RDC

1.3.1. Site Acceptance Testing (SAT)
The EDS OEM shall coordinate and conduct SAT testing on the EDS machines in the presence of a TSA designated government witness. The EDS OEM shall implement and coordinate testing by issuing a Test Readiness Notification (TRN) at least 7 days prior to the scheduled Acceptance testing. Passing SAT results are required prior to final integration of EDS to the BHS and to certify equipment readiness for operational use in screening baggage. In the event that the TSA supplied EDS units cannot meet SAT test requirements, TSA will ensure that any EDS machine defects are corrected or that the EDS unit is replaced.

1.3.2. Site Specific Test Plan Development (SSTP)
TSA has arranged for its Acceptance Test Contractor to develop a SSTP based on testing criteria outlined in the TSA PGDS Appendix D. The Draft SSTP will be based on the Airport's responses to a Site Planning Checklist to be completed ≥120 days in advance of ISAT. The Final SSTP shall be delivered to the Airport between 60 and 30 days in advance of projected ISAT start-up. The ILDT and TSA Acceptance Testing Contractor will conduct review meetings of the Draft SSTP and Final SSTP per schedule in Table 1, Section 1.3 of this OTA prior to ISAT. Any requests for deviation from the SSTP testing requirements must be delivered in writing through a RFV to the TSA RDC and Acceptance Test Lead prior to this Final SSTP meeting for review and response.

The TSA RDC and TSA Acceptance Test Lead will review/evaluate any requests for phased testing (e.g. non-consecutive testing activities requiring multiple TSA Test Team trips). Such requests must be supported by compelling justification and submitted in writing through a RFV to the TSA RDC and TSA Acceptance Test Lead during the design process and well in advance of SSTP development. Programming or mechanical changes made before ISAT (typically during Contractor pre-testing) must be documented and provided to the TSA RDC and TSA Acceptance Testing Contractor. Once a system enters TRR, no variances will be permitted to the testing criteria.

1.3.3. Integrated Site Acceptance Testing (ISAT)
Scheduling and Coordination: Construction schedule including the ISAT start date(s) and duration(s) shall be shared with the TSA Site Lead Contractor, TSA RDC, TSA Acceptance Test Lead and TSA Acceptance Test Contractor through weekly and monthly meetings and reports upon submission of the SSTP checklist to ensure all stakeholders maintain schedule awareness.

This schedule shall be distributed each time changes are made to the ISAT start date and/or duration. Changes made to the schedule within two weeks of the planned ISAT start date may relieve the TSA of the obligation to begin testing within three business days of the TRR. In this situation, the ISAT start date could depend on TSA's testing workload and resource allocation.

Test Results and Reports:
Testing results will be shared in hard copy format with the Airport from the RDC through the local TSA Point of Contact. Test results will identify security, efficiency and safety concerns. There are four (4) possible test outcomes:

- **Meets PGDS Criteria** – The system under test meets CBIS design and PGDS criteria.
- **Minor Defects Found** – The system under test had no security failures and performance deficiencies would not impede system performance and staffing levels.
- **Major Defects Found** – The system under test had no security failures but performance deficiencies would be detrimental to system performance and/or staffing levels.
- **Fail** – The system under test produced security failures and/or deficiencies that would be excessively detrimental to system performance and staffing levels.

In the event of a failed ISAT result, TSA reserves the right to defer any subsequent re-tests for a period of at least 30 days.

1.4 INTEGRATION SERVICES

1.4.1. BHS Support

The EDS OEM shall assist the **MDAD's** contractor to establish digital and serial communication for the EDS units. Once communication between devices has been established, the EDS OEM shall provide the following support and integration services.

- Assist the BHS contractor to obtain efficient EDS operation.
- Provide on-site Integration Engineer Support Services to facilitate the entire integration effort with the BHS.
- Be available to support system testing and validation conducted by internal or external organizations including the Integrated Site Acceptance Test (ISAT) and pre-ISAT Project testing and throughout the planning phases including the issuance of the ISAT TRN and TRR.
- During initial Live Operations Run-In, provide system performance documentation and technical assistance as requested by TSA, TSA Acceptance Testing Contractor and/or the ILDT.

1.4.2. Software and Hardware

Following SAT and throughout the integration effort, the EDS OEM shall install and test the required software and hardware to allow for digital and serial communication between the EDS and the BHS PLC if required. Functionality of the EDS BHS interface hardware and software shall be verified by the EDS OEM at the interface box prior to working with the Airport BHS contractor to ensure a proper operating PLC interface and to avoid delays.

1.5 SYSTEM NETWORKING

1.5.1 Network Infrastructure

The EDS OEM shall provide required patch cables and miscellaneous hardware to interface between network patch panel and EDS OEM supplied networking components.

1.5.2 Network Services
The EDS OEM shall provide: training for TSA staff; coordination and support for TSA and testing certification; and resources to conduct installation, testing, and initial operational support for networking. No other network may interface with the networked airport screening solution. The implemented assigned network for operation shall be an isolated, stand-alone network.

1.6. TRAINING
TSA will provide training for TSA screening staff on the operation of the EDS and ETD equipment.

1.7. MAINTENANCE
Upon successful completion of SAT testing for each unit, TSA will maintain and repair the EDS and ETD units throughout their lifecycles.

B. MDAD's RESPONSIBILITIES with regard to the Project are listed below in sections 2.1 to 2.5 listed below.

2.0 DESIGN
The **MDAD** will undertake design of a baggage screening system in accordance with the TSA PGDS to meet the needs of the Airport and TSA FSD. The **MDAD** shall submit all applicable design requirements to the TSA RDC for review and as further defined in Chapter 2 of PGDS Version 4.1. The **MDAD** shall respond to TSA design review comments promptly and in writing prior to the start of the next design phase for the CBIS Project.

2.1 EDS PLACEMENT
If applicable, the **MDAD** shall ensure that the Project site will be ready to accommodate the installation of the EDS and associated equipment. The **MDAD** shall provide adequate protection to the EDS machines and to the airport infrastructure during any and all EDS movements. The **MDAD** shall coordinate with the EM to integrate all activities regarding placement of EDS equipment. The **MDAD** shall provide reasonable measures to protect the EDS and ETD equipment from damage in the screening area.

2.1.1 Site Readiness and Storage
The **MDAD** shall confirm site readiness to receive EDS units to the TSA Site Lead Contractor no later than 10 business days prior to requested delivery date. Site readiness shall address availability of temporary or permanent power; removal of obstacles to the rigging path; and adequacy of physical environmental conditions within the delivery area that meet EDS OEM standards for protecting the EDS units. The **MDAD** shall provide secure storage for the EDS units and any ancillary screening equipment if site conditions at the time of delivery do not provide adequate protection. The **MDAD** shall provide secure storage space for hardware associated with EDS integration and multiplexing until it can be installed by EDS OEM Integration Support Staff. Failure to meet these minimum requirements may result in reallocation of equipment to other sites, thus affecting the airport's overall project schedule.

2.1.2 Rigging Services

The **MDAD** will be responsible for providing rigging path verification, ingress path, and/or structural analysis. If required, the Airport will remove and replace any walls, windows, glass, doors, or other physical barriers in support of rigging activities.

2.2 INSTALLATION SUPPORT

2.2.1 Power Requirements

The **MDAD** will provide terminations to the EDS for electrical power. The **MDAD** will be responsible for providing all infrastructure power requirements including separate metering. If applicable, the **MDAD** will design and install all power requirements to terminal locations within the Checked Baggage Resolution Areas and at EDS locations. The **MDAD** will provide cabling from terminations to EDS equipment. The **MDAD** shall attest to the availability of power supply to adequately support the EDS and associated equipment in accordance with OEM specifications and be liable for damage to this equipment resulting from intentional deviations to accepted power supply conditions.

2.2.2 Commissioning Services

The **MDAD** will be responsible for obtaining all other infrastructures not mentioned in Section 2.2.1 to support EDS operations and maintenance.

2.3 INTEGRATION SERVICES

The **MDAD** shall ensure that the BHS Contractor coordinates with EDS OEM in support of integration activities (e.g. installation and testing the required software and hardware to allow for digital and serial communication between the EDS and the BHS PLC) as needed. Terminations to the EDS for BHS PLC communication shall be performed by the **MDAD**.

2.4 NETWORKING

2.4.1. Network Infrastructure

The **MDAD** will design and install all communication conduit, fiber, etc. as required by the EDS OEM's design criteria for the EDS and EDS networking system, including but not limited to connectivity of Checked Baggage Resolution Areas, TSA network control room, and BHS Control Room as required. Exact parameters will be reviewed at Project start-up by TSA.

The **MDAD** will provide cabling and network patch panels in TSA control rooms, ETD search areas, and the TSA network room as determined by the network design conducted in conjunction with the **MDAD**. The EDS OEM shall provide required patch cables and miscellaneous hardware to interface between network patch panel and EDS OEM-supplied networking components. The **MDAD** will provide all electrical outlets to support installation and operation of a fully multiplexed explosive detection system.

2.4.2. Network Services

No other network may interface with the networked airport screening solution. The implemented assigned network for operation shall be an isolated, stand-alone network.

2.5. ACCEPTANCE - TESTING SUPPORT

The Project schedule shall allow for sufficient time to conduct mandatory testing of the EDS units after installation and integration. The Project schedule shall also factor in minimum lead times for notification of readiness for testing (7 days for SAT; 3 days for TRR; and at least 3 business days for ISAT). The **MDAD** shall identify operational windows in time in which testing activities can be accomplished. Testing activities will be scheduled for normal 8-hour business days (Monday-Friday) and should not include holidays.

Testing activities shall also be scheduled such that test articles shall not be comingled either physically with Live Passenger Bags on existing or new screening systems or their electronic screening images shall not appear on consoles being used for Live Passenger Bag screening. Use of temporary networks or phased testing to accommodate the separation of Live Bags and Test Articles must be approved in writing through a RFV in advance of TRR/ISAT by the TSA RDC and TSA Acceptance Test Lead.

Requests for overtime or multiple shifts are discouraged and will only be considered based on compelling justification. The TSA RDC and TSA Acceptance Test Lead will review/evaluate any requests for phased testing (e.g. non-consecutive testing activities requiring multiple test team trips). Such requests must be in writing supported by compelling justification and submitted to the TSA RDC well in advance of SSTP development. Programming or mechanical changes made before ISAT (typically during Contractor pre-testing or TRR) must be documented and provided to the TSA RDC and Acceptance Test Contractor.

2.5.1 Site Specific Test Plan (SSTP)

The **MDAD** shall ensure that information needed to develop an accurate SSTP is provided to TSA Test Acceptance Lead at the earliest opportunity, but no later than 120 days prior to the requested testing date. Required documentation includes:

- Completed Site Survey Data Collection Checklist
- Any and All Approved Request for Variance (RFV)
- Basis of Design Report
- Sample BHS & CBIS Reports for all PGDS required Reports
- BHS & EDS Network Diagrams and Server Architecture
- Local Procedures for Fail-Safe, E-Stop, Jam Clearing and IQ Test Conduct
- Airport/Airline Bag Induction/Hygiene Procedures
- BHS Specifications
- Controls Description and/or Description of Operation (if both exist then provide both)
- Fail-safe and/or E-Stop Zone Drawings
- BHS Mechanical Plan and Elevation Drawings from Natural Induction Locations to & through the CBIS, CBRA and Make-up Locations with Conveyors labeled Plan View Drawings and Electrical Drawings of the BHS/CBIS with Control Station & Photoeye Locations and labeling. All drawings will be "Approved for Construction" by the Airport and not Pre-Bid or Bid Use Only versions.
- At least 1 Plan/Overview Drawing that shows the entire CBIS in a single view
- Conveyor Motor Manifest to include not less than (Conveyor Name, Phase, Conveyor Type, Degree of Turn, Degree of Incline/Decline, Length, Speed in FPM, Motor HP, Control Type (VFD yes/no), Brake Type, Motor Type, drive Type, FLA Rating).

- Installation & Commissioning Phasing Plan Narrative and Phasing Plan Drawings
- Construction and Testing Schedules provided through weekly and monthly meetings and reports prior to ISAT.

All drawings shall be clearly visible and readable when plotted on Arch D Size Stock. All documents shall be submitted electronically (e.g. text documents in MS Word or PDF and drawings in AutoCAD [.dwg] or PDF.)

Any system constraints that will prevent compliance with TSA testing and performance criteria must be disclosed in writing to TSA as far in advance as possible to allow for evaluation of applicable waivers. Any restrictions on system availability and accessibility for testing shall be disclosed. Cutover plans including any phasing plans that will affect the TSA Acceptance Test Contractor's ability to test the full system from ticket counters and curbside inductions (if applicable) through the outbound/sortation system shall also be disclosed to allow for the development of an accurate SSTP. Cutover plans that will result in multiple testing phases shall also be presented to the TSA RDC in writing for review and approval prior to the Test Coordination Meeting and no later than 30 days prior to ISAT.

The **MDAD** will have the opportunity to review and comment on SSTP in advance of testing. Comments and/or questions should be directed to the TSA RDC and the TSA Site Lead Contractor.

2.5.2. Test Readiness Report (TRR)
This pre-ISAT activity is conducted by TSA Site Lead Contractor in coordination with the **MDAD** (typically the BHS Contractor.) The purpose of this testing activity is to assure TSA of site readiness for ISAT and is a precursor for TSA authorization for TSA Acceptance Test Contractor to deploy. The **MDAD** will be provided TRR data sheets by the TSA Site Lead Contractor. BHS/CBIS configuration and operation shall be in final form intended for bag screening operations. Unless mutually agreed to, changes/improvements to BHS/CBIS between TRR and ISAT are not authorized. The **MDAD** must address security and efficiency defects found during TRR and be prepared to implement mutually agreed upon corrective actions prior to ISAT.

Required input from the Project Team will include:

Functional Testing Documentation: Testing authentication must be clearly reported and show every test with bag ID and declared status on printed EDS FDRS (Field Data Reports) and on the printed Critical Tracking PEC Report (as required in PGDS Section 7.2.14) resulting bag destination. Ledger forms should show test date, type of test, identification of bag destination location, and ID number of the bags arriving at that location. These reports should be organized and indexed in an electronic media/file or loose-leaf binder(s)

- Each test shall conclude with an indication of successfully passing the required criteria of BHS specification and testing criteria and if conflict or failure exists, then so indicate with an explanation.
- Presentation of completed testing and TRR required documentation to TSA Site Lead not less than 7 business days prior to anticipated Pre-ISAT date is required.

System Mixed Bag Test and System Throughput Test Observation: Sufficient numbers of test bags (no less than 100 test bags per EDS) will be utilized to "stress" the BHS/CBIS as would occur during peak operating times. Test bag set profile should be similar to the TSA Acceptance Test Contractor's test bag profile.

- A real-time observation by TSA Site Lead Contractor of a global BHS/CBIS System Mixed Bag Test and System Throughput Test using clear and suspect bags is required.
- All EDS equipment must be operational.
- All baggage entry points must be utilized.

The TSA Site Lead Contractor or Acceptance Testing Contractor performs the TRR. If successful, a Test Readiness Notice is issued to the TSA RDC and the TSA Acceptance Test Contractor for ISAT deployment. If delivered by COB Monday through Wednesday (5:00 p.m. EST), ISAT deployment will occur the following Monday. If delivered any time Thursday through Sunday, ISAT deployment will occur on the second Monday. If changes are made to the system following TRR without prior coordination with TSA, ISAT testing shall be postponed pending submission of documentation for review and evaluation by TSA and its Acceptance Test Contractor (see paragraph 2.5.7)

2.5.3. Logistical Support Needs: The **MDAD** shall identify and provide any logistical or support needs that will impact TRR and ISAT testing, to include:

- any process needed to obtain sufficient baggage tags should the system use IATA baggage tracking mechanisms, pier tags should the system use pier tags, or blank bag tags if the system does not use IATA baggage tracking mechanisms; Quantities of tags needed will be coordinated during the Site Survey Meeting and the SSTP review Meetings
- any process needed to obtain sufficient baggage tubs/totes (typically 20 per installed EDS)
- any process needed to obtain sufficient bag transportation devices (tugs, totes, carts, etc.) needed to move test articles in and around the CBIS, CBRA, laydown area and sort/claim devices
- any process needed to obtain safety training and/or General Contractor access for TSA Acceptance Test Contractor, as required"
- any process needed to obtain airport badges/access for TSA Acceptance Test Contractor personnel; and/or personnel escorts. Airport SIDA Badging Process shall not require more than 2 trips of test team personnel to the site, 1 work week maximum duration each, to obtain SIDA badges including fingerprinting, SIDA Training, testing, issuing and pickup.
- availability of BHSC and BHS Programmer to operate BHS during ISAT and provide support for ISAT Testing and diagnostic activities (BHS reports, investigations, and explanations to questions from the TSA Acceptance Test Contractor)
- provide baggage handling support for testing activities including bag loading, unloading, transport, fault recovery, during ISAT and TRR including movement between test and laydown/storage areas; and
- availability of support for delivery and secure and weather protected storage of TSA Acceptance Contractor test bags for ISAT (100 bags per EDS contained in 2 LD3s per 100 bags.)

2.5.4. ISAT Testing: The TSA Acceptance Test Contractor will meet with the **MDAD** between 30 and 45 days prior to testing to coordinate the conduct of ISAT testing. The TSA Acceptance Test Lead and the **MDAD** will finalize details relating to the scheduling and duration of the testing. (Generally allow one day of travel for ISAT Testing Team in and out; one day for Site Mobilization; one day per EDS Spur Line; one day per System Level Test (Dieback, Mixed Bag Sortation and Throughput; one day for demobilization and cleanup). It is recommended to schedule one to two additional days for unforeseen testing delays or contingences.

2.5.5. Test Results and Reports
The Airport shall report corrective actions to be applied and the timeline associated with deficiency corrections. Corrective actions shall address all defects identified in the TRR/TRN (pre-ISAT) or QLR (ISAT). TSA is not obligated to accept or operate a baggage screening system that does not meet the minimum test standards.

2.5.6. Operational Run-In
The Run-In period will extend for a minimum of 30 days from the start of substantial operations with cutover of substantial input and output lines. This period of time shall be discussed and agreed to by all parties during the SSTP development process, and reconfirmed at the completion of the ISAT. Substantial Operations shall normally be defined as when the CBIS is processing 85% or greater of its normal (not peak) operational daily load of "checked bags or luggage" for the time period at hand (i.e. not based on future dates of operation). This period shall also be dependent on resolution of deficiencies found during testing and Run-In. Once a week during the Run-In period, the Airport or their authorized representatives shall forward electronic versions of all CBIS Reports required by PGDS Chapter 7, Section 7.2.14. to the TSA Acceptance Testing Contractor. After receipt, review and analysis of at least 21 days of performance data, TSA and their Acceptance Test Contractor will deploy to the site in either the 4th or 5th week of Substantial Live Operations to physically verify closure of open deficiencies, and assess observe system operation against the data reported. The ILDT or their Contractors will also pull and provide the PLC Code for the same PLCs as provided at ISAT start. Based on the data analysis and physical observations, a recommendation will be made to TSA via a Test Summary Report (TSR) to end the Run-In period, extend the Run-In period, and/or change the operational status of the CBIS.

2.5.7. Post Commissioning Activities:
The TSA Site Lead Contractor will conduct 30-day operational run-in observations of the system following successful ISAT testing.

The Airport shall provide the TSA RDC a written response outlining corrective actions that will be taken due to outstanding deficiencies, issues, and action items identified in the Quick Look Report (QLR) and Test Summary Report within two (2 weeks of receipt of the QLR or TSR.

For the continued and secure operation of the CBIS, all changes to the BHS system that impact the CBIS operation during and after its initial commissioning must be reviewed, evaluated, and endorsed by TSA before they are implemented by the Airport. The Post-ISAT changes procedure must be provided in accordance with PGDS Appendix D. The procedure is to be

followed for all changes to CBIS systems other than those required for normal routine and periodic maintenance/repairs to the BHS system. The Airport responsible for the BHS system shall assemble an information package for submittal to TSA RDC which includes the fallowing minimum information.

- Written description of all proposed physical and programming changes to the BHS and CBIS system(s)
- Reason for proposed change(s)
- Anticipated impact to system operation (e.g. increased throughput, lowered tracking losses, elimination of bag jams)
- Drawings showing affected areas
- Any potential security, tracking or efficiency impacts, including impacts on TSA manpower or operations
- Testing procedures
- Proposed date of changes

A CBIS Configuration Change Request Form will be provided by TSA. This package shall be delivered to the local TSA FSD who shall review the package. The local TSA FSD shall add any comments he/she may have and forward the form to the following email address: OSTCBD@dhs.gov.

The TSA will review and analyze the efficacy and impact of these changes to determine if it may be necessary for TSA to re-certify the CBIS system(s). Once the review has been completed, TSA shall notify the local TSA FSD and the Airport with the TSA recommendation and testing requirements for the system changes,

APPENDIX C

Construction Milestone Schedule

Design & Construction Services Milestones	[Dates to be included]
Project Validated / Notice to Proceed (NTP)	
Design OTA Awarded	
Facility Modification OTA Awarded	
Pre-Design Deliverables Submitted	
Pre-Design Deliverables Approved	
Schematic Design Deliverables Submitted	
Schematic Design Deliverables Approved	
30% TSA Design Deliverables Submitted	
30% TSA Design Deliverables Approved	
70% TSA Design Deliverables Submitted	
70% TSA Design Deliverables Approved	
100% TSA Design Deliverables Submitted	
Final Construction Drawings Approved	
Facility Modification NTP (if applicable)	
Facility Modification Progress Meetings (reoccurring)	
Facility Modification Substantially Complete (if applicable)	
Site Assessment and Survey Report Submitted	
Site Installation Plan (SIP) Submitted	
SIP Approved	
EDS Delivered and Placed	
Site Acceptance Test (SAT) Passed	
Integrated Site Acceptance Test (iSAT) Test Readiness Review Complete (if applicable)	
iSAT Passed (if applicable)	
EDS Installation/Networking Start	
EDS Installation/Networking Finish	
EDS Decommissioned (if applicable)	
EDS Removal Start (if applicable)	
EDS Removal Finish (if applicable)	
Live Bag Screening (LBS) Start	
Record Dwgs / CAD As-Built Submitted	
TSA Final Sign-off of Project	
Final Invoice Submitted	
Project Completion Notification Submitted	
Project Finish / Contract Closeout	

APPENDIX D, SCHEDULE OF CONSTRUCTION DELIVERABLES

The following deliverables are required to be submitted by the **MDAD**:

Item	Submitted To:	Frequency or Due Date
Design: pre-design, schematic, 30%, 100% to include detailed construction cost estimate	TSA Regional Deployment Coordinator	In accordance with the TSA PGDS.
EDS Delivery Schedule	TSA Regional Deployment Coordinator	NLT 30 Days after Construction Contract Award
Schedule of Values (Design, Construction, Baggage Handling Contracts)	TSA Regional Deployment Coordinator TSA Contracting Officer	Within 30 days after execution of the TSA Agreement or upon issuing Notice to Proceed to Contractor. To be updated on a monthly basis and submitted with the monthly report.
Copies of the Design and related Construction Contracts and Change Orders	TSA Regional Deployment Coordinator TSA Contracting Officer	Upon contract award. Change Orders affecting the CBIS Project require advance TSA approval.
Monthly Milestone and Project Status Report	TSA Regional Deployment Coordinator TSA Contracting Officer TSA Site Lead Contractor	By the 10th of each month. Electronic submission is requested if feasible.
Quarterly Project Financial Statement	TSA Regional Deployment Coordinator TSA Contracting Officer FinanceConfirm@tsa.dhs.gov	Quarterly upon execution of the OTA.
Summary report of Small Business/Disadvantage Business Enterprises utilization Report	TSA Contracting Officer	By September 30th each year and upon completion of the Project via email
CONSTRUCTION PHASE		
Mechanical and Electrical Shop Drawings	TSA Regional Deployment Coordinator TSA Site Lead Contractor	Upon completion by the **MDAD**.
Close Out Process		
Close Out Process – Correction of testing deficiencies	Close Out Report submitted to TSA Regional Deployment Coordinator and TSA Site Lead Contractor	Airport responses within (2) weeks of receipt of QLR and TSR to address noted CBIS
Final Copy of PLC program and software disaster recovery	TSA Regional Deployment Coordinator	No later than 30 days after commissioning of system(s)

procedure in electronic format.		
As Built Drawings in electronic format, .dwg (AutoCAD) or comparable format to include final description of operations; mechanical layouts, including belt speeds in CAD and PDF file format.	TSA Regional Deployment Coordinator	No later than 30 days after 30-day operational run-in period
Overview of drawings of the Matrix/Node, Resolution Room, OSR Room as applicable. dwg (AutoCAD) or comparable format	TSA Regional Deployment Coordinator	30 days after 30-day operational run-in period
Final Invoice	TSA Regional Deployment Coordinator TSA CO	No later than 90 days after final sign-off of system by TSA Deployment Manager, following successful operational run-in period and start of live bag screening
POST COMMISSIONING CHANGES		
CBIS Changes after Commissioning	OSTCBD@dhs.gov	See Post Commissioning Requirements, Appendix B, paragraph 2.5.7

The Monthly Milestone and Project Report are to be submitted by the 10th of each month. A draft Monthly report template will be submitted via separate correspondence. The Monthly Milestone and Project Report shall address the following:

a. Actual start and/or finish dates for updated/completed activities.
b. Remaining duration, required to complete each activity started, or scheduled to start, but not completed
c. The Project's progress to include Project Percent Completion; cost incurred and invoiced to date; a forecast the Project completion date and final costs; as well as monthly schedule and budget variances throughout the Project.
d. Percentage for completed and partially completed activities.
e. Any CO approved changes including but not limited to new activities, deleted activities, activity duration changes, and change in logic relationships between activities.
f. Status date for the schedule update.
g. A statement that identifies and describes any current or anticipated delays that includes the following information: identification of the delayed activity by description and activity code; type of delay; cause of the delay; effect of the delay on other activities, milestones, and completion dates; identification of actions needed to avoid or mitigate the delay.
h. Summary of cost incurred and invoiced to date.

i. Description of lessons learned
j. Construction Schedule in both PDF and "live"/usable format to depict the critical path, baseline and actual date information; predecessors/successors and shall be broken down to a minimum of three (3) WBS levels where applicable.

The construction schedule will be used for all planned TSA activities (delivery of equipment, scheduling of testing, etc).

APPENDIX E
STIP DATA REQUIREMENTS FOR CHECKED BAGGAGE SYSTEMS

The TSA HQ Office of Information Technology (OIT) and Security Technology Integrated Program (STIP) require STIP-enabled transportation security equipment (TSE) to have specific connections to securely and reliably network the equipment. Multiple parties play a role in this portion of Checked Baggage Inspection System (CBIS) specification and execution.

Roles and Responsibilities for Implementing STIP

As CBISs are recapitalized or optimized, the project owner's contractor will provide new telecommunications outlets and cables as needed to support new technology. If a CBIS reconfiguration is initiated as part of a recapitalization/optimization, safety effort, new technology deployment or any other CBIS redesign initiative, the CBIS contractor will be responsible for restoring the previous state of connectivity ("make whole"), including development of the scope of work (SOW). Implementation in the field will occur via the CBIS contractor. A working group, or Integrated Local Design Team (ILDT) must be formed consisting of representatives from the Airport Authority, FSD staff, OSC, OIT and STIP. The group should meet immediately via conference call once it has been determined that a CBIS is going to be recapitalized or optimized. This action will ensure that ALL aspects of the CBIS redesign have been identified and assigned to a specific group for action and funding. The ILDT will organize the working group members, develop, review and approve the SOW. The OIT Field Regional Manager (FRM) shall always be consulted when a CBIS redesign is initiated and will provide the necessary routing information to ensure the checked baggage systems are appropriately cabled to a networked TSA IT cabinet.

The IMAC Process

The IMAC Process is the mechanism by which TSA OIT will procure and install IT hardware (e.g. network switch) following the IT infrastructure build-out of a CBIS contractor. The OSC Regional Deployment Manager (RDM) shall be responsible for engaging OIT at project initiation and including the respective regional Field Relations Manager (FRM) throughout the construction process.

The IMAC process takes between 30 and 45 days and needs to be initiated to complete the following tasks:

- Procurement, configuration and shipment of IT hardware
- Installation of IT hardware
- Patch cabling of checked baggage equipment
- Validation of network connectivity for checked baggage equipment
- Validations of STIP EM sever registration for checked baggage equipment.

It is imperative to engage each team member as early as possible in order to avoid any gaps in IT services.

Specific Design Standards and Requirements

Two modular jacks consisting of a flush-mounted telecommunications outlet box plus/minus 10 feet from the equipment are required. Even though one is redundant, both terminations should be connected using Cat5e or Cat6 4-pair 100 ohm unshielded twisted pair (UTP) or screened twisted pair (ScTP) cable and terminated on the patch panel in the closest TSA IT cabinet. The data cable type should be based on the existing conditions at the Checked Baggage Inspection System (CBIS). The purpose of this connectivity is so that TSA HQ can review statistical data over the network from screening equipment for a particular airport and time period without having to go to the site.

Installation and/or relocation of Cat5e/Cat6 data cabling will meet or exceed the specifications listed in the TSA Structured Cabling System Guidelines dated July 2012 [Attached]. This document will be provided by the TSA to the ILDT.

In addition, the following requirements should be met:

- All ETDs and stand-alone EDSs will have 1 "dual telecommunications outlet".
- It is assumed that when a multiplex server is present, connectivity to TSANet will terminate at the multiplex server cabinet, therefore connectivity to TSANet for each EDS is not required.
- All core drilling will support a minimum of 4 "modular jacks".
- All new fiber installations will be multimode fibers, either multimode fiber, either 50/125 or 62.5/125 micron fibers r 50/125 or 62.5/125 micron fibers, six-strand bundles enclosed in inner duct.
- All cabinet installations require 2 110v 20A service.
- All cabinet installations will meet the local seismic rating requirements and can be floor/bracket mounted.
- All cabling outside of TSA controlled space must be in Rigid Metal Tubing (RMT) conduit. Any deviance will must be approved through existing RFV procedures.
- All newly installed and existing data jacks and associated patch panels must comply with TSA's approved scheme [see provided TSA Structured Cabling System Guidelines dated July 2012].
- Provide TSA completed Data Capture Sheet [Attached] and cable certification paperwork prior to established I-Sat date.

Figure 1 illustrates all of the equipment that must be connected to the Main Distribution Frame (MDF)/Intermediate Distribution Frame (IDF) IT cabinet for a stand-alone CBIS configuration. When the EDS are in a stand-alone configuration, each EDS must be connected to the patch panel.

Figure 1
STAND-ALONE CBIS CONFIGURATION

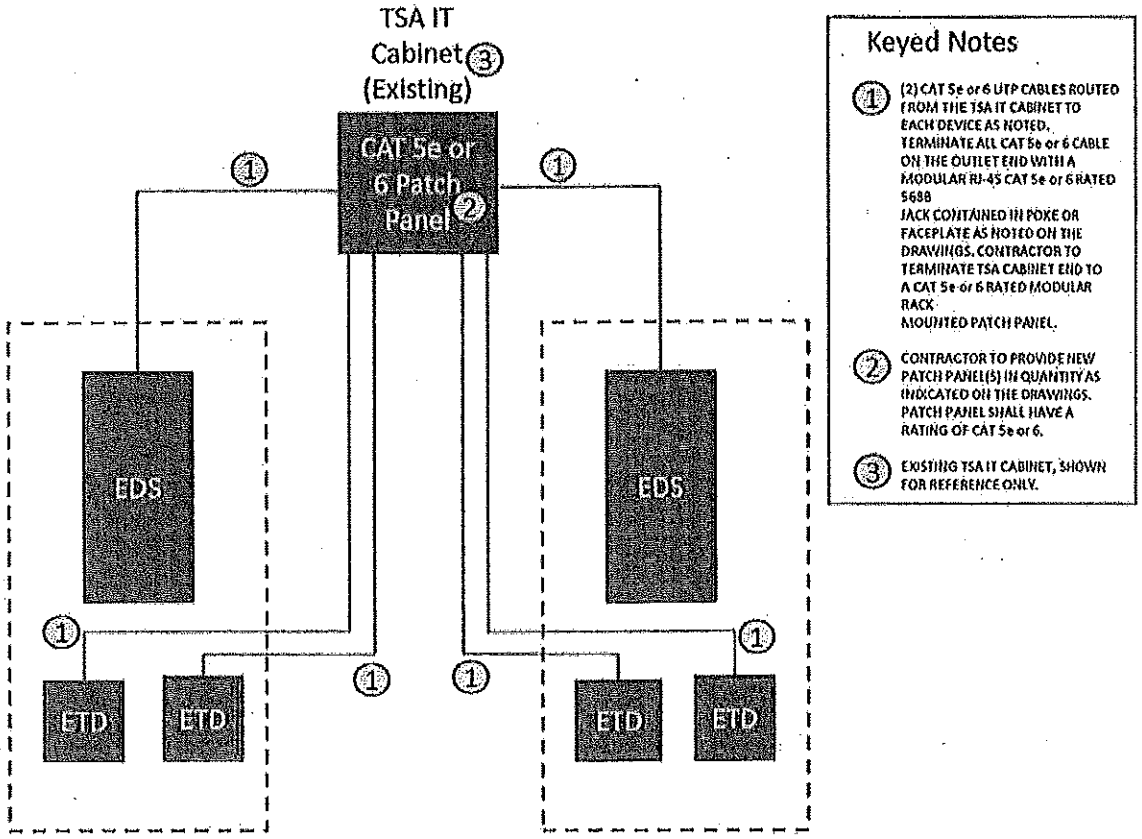

Figure 2 illustrates all of the equipment that must be connected to the IDF IT cabinet for a CBIS where the EDS machines are already networked together. When the EDS machines are networked together (i.e., MUX, NEDS, etc.), the connection only needs to be made to the EDS Network Server(s).

Figure 2
NETWORKED CBIS CONFIGURATION

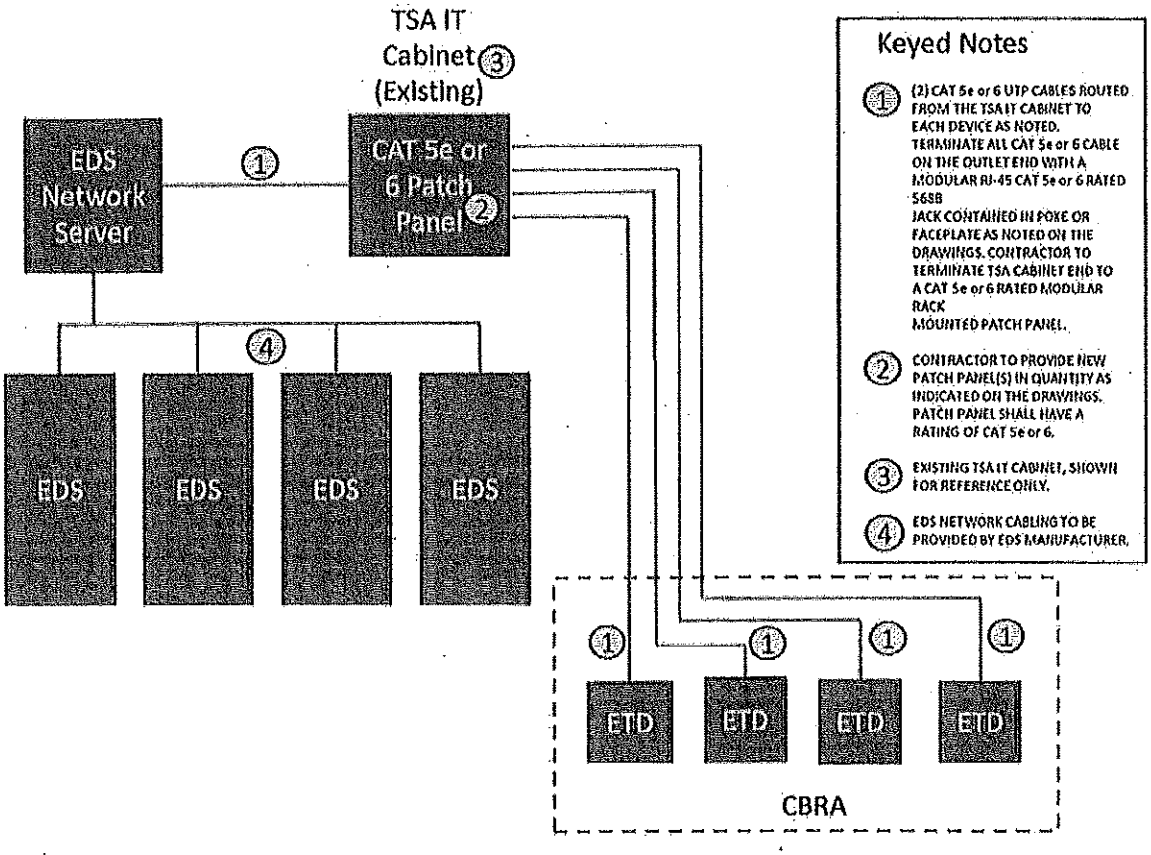

At a minimum, the following guidelines should be considered when designing a new CBIS or reconfiguring an existing CBIS.

- If an existing TSA IT cabinet is within 295 feet of the CBIS:
    - Verify that the existing switches have sufficient open ports to accommodate the required number of drops
    - Notify TSA OIT FRM if the existing switch capacity will not accommodate the required number of drops so that additional equipment can be procured.
    - Punch down cabling from the individual CBIS devices in the patch panel of the IT cabinet

- If there is no IT cabinet within 295 feet of the CBIS:
  - Install an appropriate IT cabinet. Refer to **Figure 3** for the IT cabinet specifications
  - Run fiber optic cable from the IT cabinet to an existing TSA IT cabinet
  - Notify TSA OIT FRM so that additional equipment can be procured.
  - Punch down cabling from the individual CBIS devices in the patch panel of the IT cabinet
  - Initiate IMAC group to install jumper cables from the patch panel to the switch and activate port

Figure 3
IT CABINET

[illegible]	[illegible]	[illegible]	[illegible]	[illegible]	[illegible]
IT Cabinet	Size 24H 24.0"H x 27.3"W x 30.0"D Weight: 97 lbs	1 or more per checkpoint depending on size	For 24H, 36H and 48H • Dedicated • 30A, 125V, 3KVA/Cabinet • 2 Pole, 3 Wire Grounding • NEMA 15-30R Receptacle • 3KVA UPS • 6' power cord from the IT cabinet to the receptacle	• Size patch panels to accommodate all TSA data outlets at the checkpoint plus 100% spares, minimum • Size gigabit network switch to accommodate all data outlets in checkpoint plus 10% • Provide a minimum of four pair single mode fiber optic cable from IT cabinet to the TSA main distribution frame.	• 30" front and rear access is required • These cabinets will receive all data communication lines from the SSCP, so the cabinet should be located as close to the SSCP as possible, but in a secure location. Careful consideration needs to be given to the IT cabinet location because the exhaust fan for cooling can be loud when located at a confined space with TSA or airport personnel. • Equipment racks can be loaded into the cabinet from the front or the back at the location where the cabinet is installed. Although not required, side access would improve rack access bulky and TSA personnel mobility around the cabinet • Refer to Program of Requirements dated July 2005, Section H10 for labeling, cable management and administration of IT cabinet. • Refer to Program of Requirements dated July 2005, Section H10 for acceptance testing of IT circuits. • Wall-mounted cabinets are an option in some instances, but must adhere to all applicable local codes and standards. Recommend consultation with the Field Regional Manager (FRM) when considering a wall-mounted alternative.
	Size 36H 36.0"H x 27.3"W x 30.0"D Weight: 124 lbs				
	Size 48H 48.0"H x 27.3"W x 30.0"D Weight: 161 lbs				
	Size 60H 60.0"H x 27.3"W x 30.00"D Weight: 246 lbs		For 60H and 72H • Dedicated • 30A, 208V, 6KVA/Cabinet • 2 Pole, 3 Wire Grounding • NEMA 16-30R Receptacle • 6KVA UPS • 8' power cord from the IT cabinet to the receptacle		
	Size 72H 72.0"H x 27.3"W x 30.0"D Weight: 274 lbs				

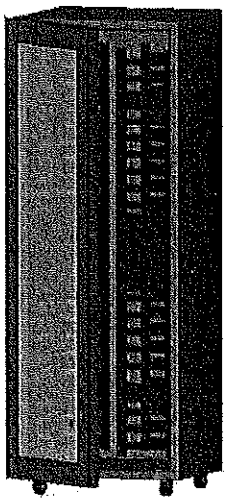

Isometric View

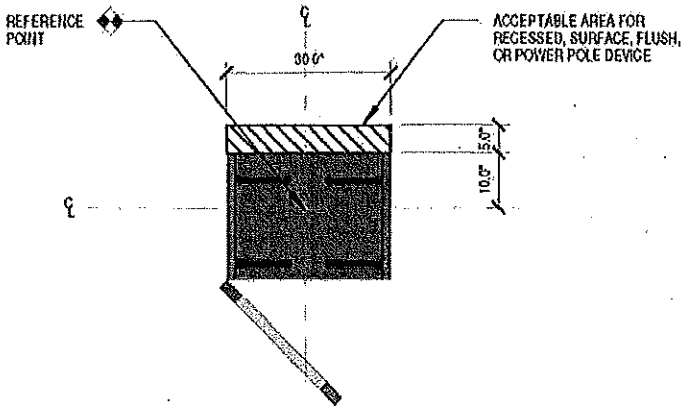

PLAN VIEW