OFFICIAL FILE COPY
CLERK OF THE BOARD
OF COUNTY COMMISSIONERS
MIAMI-DADE COUNTY, FLORIDA
(Public Hearing 07-24-07)

Memorandum

MIAMI-DADE COUNTY

Date: June 26, 2007

Agenda Item No. 5(D)

To: Honorable Chairman Bruno A. Barreiro
and Members, Board of County Commissioners

From: George M. Burgess
County Manager

Subject: Century Gardens at Tamiami Multipurpose Maintenance and Street Lighting Special Taxing District

O#07-102

Recommendation

It is recommended that the Board of County Commissioners (BCC) approve a petition submitted in accordance with Article 1, Chapter 18 of the Code for creation of the Century Gardens at Tamiami Multipurpose Maintenance and Street Lighting Special Taxing District. The creation of this District is a subdivision requirement pursuant to Chapter 28 of the Code of Miami-Dade County and Public Works Department policy. The multipurpose maintenance program will remain dormant until such time as any Homeowners Association or Community Development District (CDD) fails to provide the required maintenance services.

Scope

This proposed special taxing district lies within Commission District Eleven (11) and will provide street lighting services and other multipurpose maintenance services, if and when necessary.

Fiscal Impact/Funding Source

Creation of this District will result in no economic impact on the County's budget. The developer, pursuant to Chapter 18 of the Code, is required to fund all costs incidental to creation, operation and administration of the District for the first year including the costs to install, maintain and operate the District's street lighting system. Maintenance services which cannot be equitably or conveniently provided by the property owners shall be provided by the District upon acceptance of the plat required improvements by Miami-Dade County and upon the failure of any Homeowners Association or CDD to provide the required maintenance services and such services will be funded by special assessments against benefited property.

After the first year, the economic impact on the private sector will be a perpetual annual special assessment for the cost of street lighting to all property owners within the District, and when necessary, a special assessment for other District maintenance services. The Florida Power and Light Company is the owner of the street lighting system and therefore will derive revenues from it.

At this time there will be no increase or decrease in County staffing due to this District. The private sector may increase its staffing levels to provide the service requirements created by this special taxing district.

Track Record/Monitoring

Contingent upon BCC approval of this District, the Public Works Department's Special Taxing Districts Division will monitor the Florida Power and Light Company's agreement, installation and billing process. In the event any Homeowners Association or CDD fails to provide maintenance services, the Miami-Dade County Park and Recreation and Public Works Departments will provide the District's required maintenance services and cause implementation of special assessments for the costs of such services against benefited property.

Background

Boundaries:	On the North, theo. SW 116th Terrace and SW 117th Street; On the East, theo. SW 152nd Avenue; On the South, SW 120th Street; On the West, Canal C-1W.
Number of Parcels:	12 (Tentative plat proposes 191 buildable single-family lots and 255 townhouse units).
Number of Owners:	1
Number of Owners With Homestead Exemption Signing Petition:	None - The petition was submitted by Century Business Park, LLC., the sole property owner and developer.
Preliminary Public Meeting:	None necessary.
Required Referendum:	The creation of the District will be subject only to BCC approval; no election will be necessary as 100 percent of the property owners signed the petition.
Preliminary Assessment Roll:	The street lighting assessment roll is submitted on the same agenda as a separate agenda item for consideration and adoption by the BCC and contingent upon approval of this District's creation ordinance. In the event any Homeowners Association or CDD fails to provide the maintenance services below, a hearing before the BCC to adopt the multipurpose maintenance assessment roll will be conducted. The implementation of the assessment rolls will be in accordance with the procedures defined in Chapter 18 of the Code.

Proposed Service and Improvements

Multipurpose Maintenance Services:	The creation of this District is requested to maintain the landscaped areas, swales, the exterior of any fencing or walls within the District boundaries, and common areas Tracts B, D and F along with ingress/ egress Tract E should any Homeowners Association or CDD fail to provide these services. Failure to provide maintenance within the private road area is defined in a non-exclusive easement granted to Miami-Dade County and recorded in the Public Records.
Street Lighting Improvements:	The installation, operation and maintenance of twenty-eight (28) 22,000 lumen sodium vapor bracket-arm streetlights mounted on concrete poles.
Estimated Initial Billing:	Assessment billed annually as an itemized portion of the annual tax bill.

Initial Start of Service

Multipurpose Maintenance Services: October 1st following cessation of maintenance services by the developer and failure of any Homeowners Association or CDD to provide services.

Street Lighting Service: November 2008, following the provision of street lighting services by the developer for the first year.

Method of Apportionment

Maintenance Services:	Square Footage
Street Lighting Service:	Front Footage

Estimated Annual Total Cost	**First Year**	**Second Year**
Maintenance Services:	$0	$149,770
Street Lighting Service:	$28,120	$8,980

Estimated Annual Rates	**First Year**	**Second Year**
Maintenance Services:	Provided by	$0.0508
Street Lighting Service:	Petitioner	$3.800

Estimated Annual Assessments	**First Year**	**Second Year**
Maintenance Services:		
For A Typical Townhouse Unit:	Provided by Petitioner	$236
For A Typical Single-family Lot:		$415

Street Lighting Service:	**First Year**	**Second Year**
For A Typical Townhouse Unit:	Provided by Petitioner	$84
For A Typical Single-family Lot:		$190

The annual assessments shown above are representative of costs for typical townhouse units and single-family lots within this District.

State or Federal grants are not applicable to this special taxing district.

Each special taxing district is unique due to its geographical boundaries, affected property owners, and level of services to be provided. Creation of a new special taxing district to provide these services is the best and most cost-effective method to achieve this benefit.

In accordance with the requirements of Chapter 28 of the Code to provide street lighting in new subdivisions through the creation of street lighting special taxing districts, and in compliance with the provisions of Section 18-3 (c) of the Code, I have reviewed the facts submitted by the Public Works Director and concur with her recommendation that this District be created pursuant to Sections 18-2 and 18-22.1 of the Code.

Assistant County Manager

MEMORANDUM

(Revised)

TO: Honorable Chairman Bruno A. Barreiro and Members, Board of County Commissioners

DATE: July 24, 2007

FROM: R.A. Cuevas, Jr. Acting County Attorney

SUBJECT: Agenda Item No. 5(D)

Please note any items checked.

_____ "4-Day Rule" ("3-Day Rule" for committees) applicable if raised

_____ 6 weeks required between first reading and public hearing

_____ 4 weeks notification to municipal officials required prior to public hearing

_____ Decreases revenues or increases expenditures without balancing budget

_____ Budget required

_____ Statement of fiscal impact required

_____ Bid waiver requiring County Manager's written recommendation

_____ Ordinance creating a new board requires detailed County Manager's report for public hearing

_____ Housekeeping item (no policy decision required)

✓ No committee review

Approved _____ Mayor

Veto _____

Override _____

Agenda Item No. 5 (D)
7-24-07

ORDINANCE NO. 07-102

ORDINANCE CREATING AND ESTABLISHING A SPECIAL TAXING DISTRICT IN MIAMI-DADE COUNTY, FLORIDA, KNOWN AND DESCRIBED AS CENTURY GARDENS AT TAMIAMI MULTIPURPOSE MAINTENANCE AND STREET LIGHTING SPECIAL TAXING DISTRICT IN ACCORDANCE WITH THE PROVISIONS OF CHAPTER 18 OF THE CODE OF MIAMI-DADE COUNTY, FLORIDA; AND PROVIDING AN EFFECTIVE DATE

WHEREAS, the Miami-Dade County Home Rule Amendment to the Florida Constitution (Article VIII, Section 6) grants to the electors of Miami-Dade County power to adopt a home rule charter of government for Miami-Dade County, Florida, and provides that such charter may provide a method for establishing special taxing districts and other governmental units in Miami-Dade County from time to time; and

WHEREAS, the Home Rule Charter adopted by the electors of Miami-Dade County on May 21, 1957, provides that the Board of County Commissioners, as the legislative and governing body of Miami-Dade County, shall have the power to establish special purpose districts within which may be provided essential facilities and services, including landscape improvement and maintenance programs and street lighting, and that all funds for such districts shall be provided by service charges, special assessments, or general tax levies within such

districts only, and that the County Commission shall be the governing body of all such districts; and

WHEREAS, pursuant to such provisions of the Florida Constitution and the Home Rule Charter, the Board of County Commissioners duly enacted Chapter 18 of the Code of Miami-Dade County, Florida, providing for the creation and establishment of special taxing districts and prescribing the procedures therefore; and

WHEREAS, in accordance with the provisions of Chapter 18 of the Code of Miami-Dade County, Florida, a petition for the creation of a special taxing district to be known as the CENTURY GARDENS AT TAMIAMI MULTIPURPOSE MAINTENANCE AND STREET LIGHTING SPECIAL TAXING DISTRICT duly signed by 100% of the owners (developer/petitioner) of property within the proposed district, was filed with the Clerk of the County Commission. Such petition prayed for the creation and establishment of a special taxing district for the purpose of providing maintenance of the exterior faces of decorative masonry walls and swales including turf, trees and shrub, common areas Tracts B, D and F, along with ingress/egress Tract E and street lighting services located within the public domain to be financed solely by means of special assessments levied and collected within the area therein and hereinafter described; and

WHEREAS, upon receipt of such petition the Clerk of the County Commission transmitted a copy thereof to the County Manager who examined it and filed a written report with the Clerk certifying that such petition was sufficient in form and substance and signed and properly presented in accordance with the requirements of Chapter 18 of the Code of Miami-Dade County, Florida; and

WHEREAS, the County Manager, after making appropriate investigations, surveys, plans and specifications, compiled and filed with the Board of County Commissioners his written report and recommendations setting forth the boundaries of the proposed special taxing district, the location, nature and character of the multipurpose maintenance programs and street lighting services to be provided within the proposed district, an estimate of the cost of maintaining and operating such improvements and/or services, his certification that the proposed district improvements and multipurpose maintenance programs and/or services conform to the master plan of development for the County, and setting forth his recommendations concerning the need for and desirability of the requested district, the ability of the affected property to bear special assessments to fund the cost of maintaining and operating such improvements and multipurpose maintenance programs and/or services, and an estimate of the amount to be assessed against each square foot for landscape and other maintenance programs and each front foot for street lighting services of the benefited property within the proposed district, and expressing his opinion that the property to be specially assessed will be benefited in excess of the special assessments to be levied, and the County Manager attached to such report and recommendations a map or sketch showing the boundaries and location of the proposed district. Such "Report and Recommendations" of the County Manager was filed with the Clerk and transmitted to the Chairman; and

WHEREAS, it appearing to the Board of County Commissioners from such report of the County Manager and other investigations that the district petitioned for would be of special benefit to all property within the proposed boundaries and that the total amount of the special assessments to be levied would not be in excess of such special benefit; the Clerk of the Board certified the place, date and hour for a public hearing on the petition of the

owner/developer/petitioner and the report and recommendations of the County Manager -- said hearing was held on Tuesday, July 24, 2007 . Copies of the public notice were duly published in a newspaper of general circulation published in Miami-Dade County, Florida, and copies thereof were posted in not less than five (5) public places within the proposed district, and copies thereof were mailed to all owners of taxable real property within the boundaries of the proposed district as their names and addresses appear on the latest Miami-Dade County Real Property Tax Roll; and

WHEREAS, pursuant to said notice, the Board of County Commissioners on Tuesday, July 24, 2007 , held a public hearing, at which all interested persons were afforded the opportunity to present their objections, if any, to the creation and establishment of the proposed special taxing district; and

WHEREAS, the Board of County Commissioners, upon review and consideration of the report and recommendations of the County Manager and the views expressed by the property owners within the proposed special taxing district, has determined to create and establish such special taxing district in accordance with the report and recommendations of the County Manager, and the provisions of Chapter 18 of the Miami-Dade County Code.

NOW, THEREFORE, BE IT ORDAINED BY THE BOARD OF COUNTY COMMISSIONERS OF MIAMI-DADE COUNTY, FLORIDA:

Section 1. In accordance with the provisions of Chapter 18 of the Code of Miami-Dade County, Florida, a special taxing district to be known and designated as the CENTURY GARDENS AT TAMIAMI MULTIPURPOSE MAINTENANCE AND STREET LIGHTING SPECIAL TAXING DISTRICT is hereby created and established in the unincorporated area of Miami-Dade County, Florida.

Section 2. The area or boundaries of this proposed special taxing district are as follows:

A portion of Section 9, Township 55 South, Range 39 East, Miami-Dade County, Florida; being more particularly described as follows:

Begin at the southeast corner of the SW 1/4 of said Section 9; thence S 87° 25' 51" W for 2,677.15 feet; thence N 02° 20' 42" W for 1,360.04 feet; thence N 87° 25' 34" E for 1,206.40 feet; thence S 02° 23' 36" E for 407.55 feet; thence N 87° 25' 34" E for 690.00 feet; thence N 02° 23' 36" W for 136.00 feet; thence N 87° 24' 32" E for 690.92 feet; thence S 02° 22' 03" E for 1,087.77 feet to the Point-of-Beginning (a.k.a. Century Gardens at Tamiami, Tentative Plat # T-22648).

The area and location of this proposed special taxing district are shown on the map or sketch which is made a part hereof by reference.

Section 3. The service to be provided within this proposed special taxing district will initially consist of the following:

A) Maintain the landscaped areas, swales, the exterior of any fencing or walls within the District boundaries, and common areas Tracts B, D and F along with ingress/egress Tract E should any Homeowners Association or CDD fail to provide these services. Failure to provide maintenance within the private road area is defined in a non-exclusive easement granted ot Miami-Dade County and recorded in the Public Records.

B) Installation, operation and maintenance of twenty-eight (28) 22,000 lumen sodium vapor bracket-arm streetlights mounted on concrete poles.

Section 4. A) Multipurpose Maintenance – The combined costs of the multipurpose maintenance project and operation of the district's improvements including services, engineering, administration, billing, collecting and processing for the first year is provided by petitioner, and $149,770 for the second year. It is estimated that the cost per assessable square foot of real property within the proposed district for the initial multipurpose maintenance

program shall be provided by petitioners for the first year, and $0.0508 for the second year. The second and succeeding years' assessments will be adjusted from actual experience.

B) Street Lighting Services – The installation of the street lighting project will be accomplished pursuant to an agreement between Miami-Dade County and the Florida Power and Light Company. The combined costs of the street lighting project and operation of the district's improvements including service, maintenance, electricity, engineering, administration, billing, collection and processing for the first year are provided by petitioner and estimated to be $28,120. The combined costs of the street lighting project and operation of the district's improvements including service, maintenance, electricity, engineering, administration, billing, collection and processing for the second year are estimated to be $8,980. The estimated cost per assessable front foot of real property within the proposed district for the second year is $3.800. The second and succeeding years' assessments will be adjusted from actual experience.

Section 5. A) Multipurpose Maintenance – Miami-Dade County, as administrator of this district's maintenance program, is directed to provide service by the most effective and efficient means available on a yearly basis, as detailed in the County Manager's report which is made a part hereof by reference. If there is a proposed significant change to the level of services to be provided, the Park and Recreation Department shall conduct a meeting in the community, inviting all affected district property owners for the purpose of reviewing the district's budget and level of services.

B) Street Lighting Service – The proposed Street Lighting agreement between Miami-Dade County and Florida Power and Light Company is hereby approved and made a part hereof by reference, and the County Manager or designee and the Clerk or Deputy Clerk of the County

Commission are hereby authorized and directed to execute said agreement for and on behalf of Miami-Dade County.

Section 6. A) Multipurpose Maintenance – The County Manager is authorized and directed to cause to be made the maintenance and operation of various public improvements to be installed within the district in accordance with the provisions of this Ordinance. However, multipurpose maintenance services will be provided by the taxing district in accordance with the provisions of this ordinance only if a Homeowners Association and, if applicable, a community development district, have failed to provide these maintenance services and the County has adopted this district's multipurpose maintenance assessment roll.

B) Street Lighting Service – The County Manager is authorized and directed to cause the installation of the required street lights to be accomplished within the district in accordance with the provisions of said agreement and with the terms of this Ordinance.

Section 7. The County Manager is further directed to cause to be prepared and filed with the Clerk of the County Commission two (2) Preliminary Assessment Rolls in accordance with the provisions of Section 18-14 of the Code of Miami-Dade County, Florida. As authorized by Section 197.363, Florida Statutes, all special assessments levied and imposed under the provisions of this Ordinance shall be collected, subject to the provisions of Chapter 197, Florida Statutes, in the same manner and at the same time as ad valorem taxes. In accordance with utilization of the ad valorem tax collection method, if such special assessments are not paid, when due, the potential for loss of title to the property exists. Furthermore, it is hereby declared that said improvements and/or services will be a special benefit to all property within the proposed special taxing district and the total amount of special assessments to be levied as aforesaid will not be in excess of such special benefit.

Section 8. A duly certified copy of this Ordinance shall be filed in the Office of the Clerk of the Circuit Court of Miami-Dade County, Florida, and recorded in the appropriate book of records.

Section 9. The provisions of this Ordinance shall become effective ten (10) days after the date of its enactment, unless vetoed by the Mayor, and if vetoed, shall become effective only upon an override by this Board.

PASSED AND ADOPTED: July 24, 2007

Approved by County Attorney as to form and legal sufficiency. _____

Prepared by:

James K. Kracht

REPORT AND RECOMMENDATIONS ON THE CREATION OF CENTURY GARDENS AT TAMIAMI MULTIPURPOSE MAINTENANCE AND STREET LIGHTING SPECIAL TAXING DISTRICT MIAMI-DADE COUNTY, FLORIDA

Pursuant to Chapter 18 of the Code, and as a result of a detailed investigation of a duly petitioned for special taxing district, the following facts are submitted by the Public Works Department Director concerning the creation of Century Gardens at Tamiami Multipurpose Maintenance and Street Lighting Special Taxing District.

1. BOUNDARIES OF THIS DISTRICT

The proposed District is located entirely within a portion of unincorporated Miami-Dade County, and the boundaries, as set forth in the petition, are as follows:

> A portion of Section 9, Township 55 South, Range 39 East, Miami-Dade County, Florida; being more particularly described as follows:
>
> Begin at the southeast corner of the SW ¼ of said Section 9; thence S 87° 25' 51" W for 2,677.15 feet; thence N 02° 20' 42" W for 1,360.04 feet; thence N 87° 25' 34" E for 1,206.04 feet; thence S 02° 23' 36" E for 407.55 feet; thence N 87° 25' 34" E for 690.00 feet; thence N 02° 23' 36" W for 136.00 feet; thence N 87° 24' 32" E for 690.92 feet; thence S 02° 22' 03" E for 1,087.77 feet to the Point-of-Beginning (a.k.a. Century Gardens at Tamiami, Tentative Plat # T-22648).

The boundaries are shown on the attached plan entitled Century Gardens at Tamiami Multipurpose Maintenance and Street Lighting Special Taxing District and hereinafter referred to as Exhibit A.

2. LOCATION AND DESCRIPTION OF THE SERVICES AND IMPROVEMENTS TO BE PROVIDED

The services and improvements to be provided by this District will initially consist of the maintenance and operation of the following:

A) Multipurpose Maintenance Services – the maintenance of the landscaped areas, swales, and the exterior of any fencing or walls within the District boundaries, and common areas Tracts B, D and F along with ingress/egress Tract E. Service will commence following failure of any Homeowners Association or CDD to provide these services, and upon adoption of this District's multipurpose maintenance assessment roll. Other maintenance services may be provided in the future as specified in the District's ordinance and amendments thereto. The areas to be maintained are shown on the attached Exhibit A.

B) Street Lighting Service – The street lighting to be provided and maintained by the District will consist of sodium vapor bracket-arm streetlights mounted on concrete poles. The spacing of the streetlights

will be approximately 100 feet apart along SW 120th Street. The streetlights will be located within the public street right-of-way in accordance with the applicable standard details of the Public Works Department Manual.

3. ESTIMATE OF THE ANNUAL EXPENSE FOR MAINTENANCE, REPAIR AND OPERATION OF THIS DISTRICT

A) Multipurpose Maintenance Services	First Year	Second Year
Initial Annual Maintenance		$116,580
Parks Administration	Services will be Provided by Petitioner	23,320
Engineering and Administrative Costs		1,200*
Billing, Collecting and Processing Costs		1,540*
Contingencies		7,130*
Total Annual Maintenance Services Cost		$149,770*

B) Street Lighting Service	First Year	Second Year
28 - 22,000 Lumen Sodium Vapor Luminaires	$3,100	$3,100
28 - Concrete Poles	1,170	1,170
6,300 Ft. - Underground Wiring	1,650	1,650
Annual Fuel Adjustments (Based on 29,568 KWH at $0.06375 Per KWH)	1,880	1,880
Franchise Cost (Based on 5.91 % of $7,800)	460	460
SUB-TOTAL STREET LIGHTING SERVICES COSTS	$8,260	$8,260
FP&L RESTORATION COST	7,000	0
ENGINEERING & ADMINISTRATIVE COSTS	4,140	140*
BILLING, COLLECTING & PROCESSING COSTS	5,050	150*
CONTINGENCIES	3,670	430*
STREET LIGHTING COST PAID BY PETITIONER	$28,120	
TOTAL ANNUAL STREET LIGHTING COST		$8,980*

*To be adjusted from actual experience.

4. PROCEDURE

A) Multipurpose Maintenance Services – Upon assumption of maintenance services by the District as described in Item 2(A) above, the costs of which are estimated in Item 3(A) above, any increase in future multipurpose maintenance facilities or functions within the scope of the District may be provided upon recommendation by a majority of the property owners for consideration by Miami-Dade County as administrator, provided that any expansion of the scope of services of the District may require adoption of an amending ordinance. The deletion of services is subject to maintaining a minimum level of services as determined by the Miami-Dade County Public Works Department. The expense of the multipurpose maintenance program will be continuous. However, because cost and/or level of maintenance may increase, the estimated annual expense, as indicated herein, can only be based on the initial maintenance program. The cost of the multipurpose maintenance program will therefore require adjustment annually through the budget process performed by the Park and Recreation Department or the Public Works Department as administrator of the District. This initial cost estimate has been developed by the Public Works Department based on estimates previously provided by the Park and Recreation Department for similar maintenance taxing districts.

Prior to assumption of maintenance services by Miami-Dade County, all areas and facilities to be maintained by the District must be inspected and accepted by Miami-Dade County, and all instruments that convey title to, or provide ingress/egress over, any real property to be maintained by Miami-Dade County shall be submitted to the Special Taxing Districts Division of the Miami-Dade County Public Works Department. Maintenance of any lake, natural preservation area, archeological site and mitigation area within the District boundary to be maintained by the District will commence upon notice from the Department of Environmental Resources Management (DERM) that the developer has complied with any and all maintenance requirements imposed by DERM.

However, implementation of maintenance services may begin no earlier than October 1st, the beginning of the County's fiscal year, provided sufficient time to initiate the process of assessment and notice

of collection to all property owners within the District and that any applicable access provisions expressed in the preceding paragraph are met.

Once District services begin, if there is a proposed significant change to the level of service to be provided, the Park and Recreation Department will conduct a meeting in the community, inviting all directly affected property owners for the purpose of reviewing the District's budget and level of services. This will enable Miami-Dade County, as administrator, to secure input from affected community representatives, association and property owners to improve delivery and lower costs of the services provided within the scope of the District's authorized functions as specified in Item 2 above, and to determine the following:

1. Level of service;
2. Areas to be maintained;
3. Approximate effect on cost and rate of assessment for any changes.

Miami-Dade County shall determine the minimum service level. Maintenance services may not be entirely eliminated unless the District is abolished.

B) Street Lighting Services – As provided for under Section 18-2 of the Code, the property owner(s), the developer(s), within the proposed District shall guarantee payment of all costs and expenses incidental to the creation of such District and shall pay the entire cost of providing street lighting within the District for the first year. The Florida Power and Light Company will install the lights, poles and service lines at its expense, with annual service/rental costs to be borne by District property owners. However, the special taxing district, the developer(s), may be required to pay a differential cost if rapid construction techniques cannot be used on this project. This cost is estimated and shown as Florida Power and Light restoration cost in the District's cost estimate in Item 3(B) above.

The facilities provided by the Florida Power and Light Company will remain its property, and the company will be responsible for the maintenance of the light standards, fixtures, lamps, and all connecting service lines. The cost of streetlights in this District will be continual and is based on a preliminary estimate using Rate Schedule No. SL-1 prepared by the Florida Power and Light Company and approved by the

Florida Public Service Commission, a copy of which is attached. The District will pay the Florida Power and Light Company a monthly rental fee on each installation.

As provided by Chapter 18 of the Code of Miami-Dade County, the petitioner(s) shall advance the first year's estimated streetlight costs and pay all costs incurred to create the District for its first year of operation. The District's property owners shall pay these costs for the second and succeeding years.

Miami-Dade County may enter into an agreement with the Florida Power and Light Company, form attached, wherein Miami-Dade County will pay to the Florida Power and Light Company any costs associated with the streetlight installation, and monthly payments for the annual cost of providing the streetlight service. Following the creation of the District by the BCC and upon receipt of the payment from the developer(s) of the total estimated cost for the first year as specified above, the County Manager shall cause the petitioner's plat to be placed on a Commission Agenda for acceptance and subsequent recordation.

5. CONFORMITY TO THE MASTER PLAN OF MIAMI-DADE COUNTY

The proposed District conforms to and in no way conflicts with the Comprehensive Development Master Plan of Miami-Dade County (see attached memorandum from the Department of Planning and Zoning).

6. RECOMMENDATION CONCERNING THE DESIRABILITY OF THIS DISTRICT

The need for multipurpose maintenance programs and street lighting in Miami-Dade County is apparent. Residents and property owners of Miami-Dade County continue to demonstrate their desire for the services which will be provided by this District through numerous petitions and personal requests.

In my opinion, the proposed multipurpose maintenance and streetlight program will provide special benefits to property within the District exceeding the amount of special assessments to be levied.

7. ESTIMATE OF ASSESSMENT AGAINST BENEFITED PROPERTY

A) Multipurpose Maintenance Services – The combined cost of the multipurpose maintenance program, and administrative expenses as shown in Item 3(A) above is to be paid for by special assessments levied against all benefited properties following District implementation and is to be apportioned to individual

properties within the District on the basis of lot or parcel square footage. The cost per assessable square foot to be assessed for this service is estimated as follows:

Estimated Annual Assessments	**First Year**	**Second Year**
Estimated Total Multipurpose Maintenance Cost:	Services will be Provided by Petitioner	$149,770
Estimated Total Assessable Property Square Footage:		2,945,832
Estimated Cost Per Square Foot of Real Property:		$0.0508

Sample Assessments	**First Year**	**Second Year**
For A Typical Townhouse Unit:	Services will be Provided by Petitioner	$236
For A Typical Single-family Lot:		$415

B) Street Lighting Services – As was determined in Item 3(B) above, each property owner along the lighted roadway will pay the County, through a special assessment, a proportionate share of the total annual cost the second year and each succeeding year based on front footage. The cost per assessable front foot to be assessed for this service is estimated as follows:

Estimated Annual Assessments	**First Year**	**Second Year**
Estimated Total Street Lighting Cost:	Advanced by Petitioner	$8,980
Estimated Total Assessable Front Footage:		2,363
Estimated Cost Per Front Foot of Real Property:		$3.800

Sample Assessments	**First Year**	**Second Year**
For A Typical Townhouse Unit:	Advanced by Petitioner	$84
For A Typical Single-family Lot:		$190

C) Estimated Combined Annual Assessments – The annual assessments shown below are representative of costs for typical townhouse units and single-family lots within this District and will be adjusted from actual experience.

Sample Assessments	**First Year**	**Second Year**
For A Typical Townhouse Unit:	Provided by Petitioner	$320
For A Typical Single-family Lot:		$605

8. RECOMMENDATION

I recommend that Century Gardens at Tamiami Multipurpose Maintenance and Street Lighting Special Taxing District be created pursuant to Section 18-2 of the Code, which provides for the creation of special taxing districts for street lighting in new subdivisions and Section 18-22.1 permitting a petition of all property owners for multipurpose maintenance services. The creation of this District will be subject to BCC approval; no election will be necessary as 100 percent of the property owners signed the petition. Following adoption of the creation ordinance, it is further recommended that the BCC adopt the District's Preliminary Assessment Roll(s) Resolution. Adoption of this resolution will enable the Miami-Dade County Tax Collector to collect the funds necessary to administer this District, as well as provide funds for payment of District services. In the event actual costs are lower than the costs estimated, the Director of the Public Works Department or her designee shall adjust and decrease the rate of assessment. In the event actual second year costs are higher than the costs estimated, the County Manager may cause to be prepared revised preliminary assessment roll(s) and file the same with the Clerk of the Board for a scheduled public hearing to adopt the revised assessment roll(s). The ordinance creating the District shall take effect ten (10) days after the date of its adoption unless vetoed by the Mayor, and if vetoed, it shall become effective only upon an override by the BCC. My office will also be available to answer any questions from the public or your office in regard to the financial and/or engineering facts of this project. We further recommend that the County Manager forward this attached report to the BCC after he has reviewed it and concurred with our findings.

Encls:
(1) Copy of Petition and Attachments
(2) Copy of FP&L Rate Schedule No. SL-1
(3) Copy of FP&L Street Lighting Agreement Form
(4) Copy of Memo from Department of Planning and Zoning
(5) District Boundary Map (Exhibit A)

Memorandum

MIAMI-DADE COUNTY

Date: November 13, 2006

To: Kay M. Sullivan, Director
Office of the Clerk of the Board
Attn: Felicia Hurst

From: Donald L. Tock, Jr., Chief
Special Taxing Districts Division

Subject: Century Gardens at Tamiami Multipurpose Maintenance and Street Lighting Special Taxing District

---

In reference to the subject petition, we hereby certify that, in compliance with Sections 18-2 and 18-22.1 of the Miami-Dade County Code, this Department has verified the attached name against the records of the Property Appraisal Department, and has concluded that said petition relates to real property in a new subdivision and the signator is an owner and/or individual signing in his official capacity as representative of the owner of the property in question. We are therefore submitting the following information:

1.	Total number of parcels of land within district boundaries	1
2.	Total number of owners of property within district boundaries	1
3.	Total number of resident owners within district boundaries (this is a new subdivision area)	0
4.	Total number of signatures on the petition	1
5.	Total number of owners or representatives signing the petition in an official capacity	1
6.	Percentage of owners or representatives signing the petition in their official capacity	100%

Pursuant to Sections 18-2 and 18-22.1 of the Code, this is a valid petition.

By copy of this memorandum, I am forwarding this petition for review by the County Attorney for legal sufficiency.

Attachment

cc: James Kracht

MIAMI-DADE COUNTY ATTORNEY'S OFFICE
MEMORANDUM

TO: Don Tock
Chief, Special Taxing

FROM: James K. Kracht
Assistant County Attorney

DATE: November 16, 2006

SUBJECT: Century Gardens at Tamiami
Multipurpose Maintenance and
Street Lighting
Special Taxing District

Please be advised that I have reviewed the above referenced petition and find it to be legally sufficient, provided that the wall to be maintained is adjacent to or accessible from the public right of way

JKK/cg

Document Prepared by:
Century Homebuilders of South Florida, LLC
7270 NW 12 Street, Suite 410
Miami, FL 33126
Date Prepared: November 10, 2004

Departmental Acceptance Date
(Government Use Only)

MIAMI-DADE COUNTY
PUBLIC WORKS DEPARTMENT
SPECIAL TAXING DISTRICT DIVISION

PETITION FOR MULTI-PURPOSE SPECIAL TAXING DISTRICT

To the Board of County Commissioners of Miami-Dade County, Florida:

We, the undersigned property owners, do hereby petition Miami-Dade County, Florida for the creation of a Special Taxing District(s) required by the respective plat(s) pursuant to Chapter 18 of the Code of Miami-Dade County, Florida, for any and all of the following: the installation, operation and maintenance of sodium vapor street lights of an intensity of 9,500 and 50,000 lumens, mounted on concrete poles; landscape, lake, entrance features and wall maintenance services (landscape, lake, entrance features and wall maintenance services shall be more fully described on attached Exhibit "B").The petition for district lies within that portion of the unincorporated area of Miami-Dade County as more fully described on the attached Exhibit "A".

Tentative Plat(s) Name(s) **Century Gardens at Tamiami**

It is understood and agreed that the boundaries of this district may be reviewed by the appropriate County authorities and the streetlights to be provided shall be in accordance with minimum standards and requirements set forth by the Miami- Dade County Public Works Department.

OWNER'S NAME	OWNER'S ADDRESS	LEGAL DESCRIPTION OF PROPERTY	TAX FOLIO NUMBER (S)
Century Business Park, LLC	**7270 NW 12 Street, # 410 Miami, FL 33126**	**See Attached Exhibit "A"**	**30-5909-001-0010** **30-5909-001-1891**
			30-5909-001-1900 **30-5909-001-1920**
			30-5909-001-1930 **30-5909-001-1980**
			30-5909-001-1990 **30-5909-001-2090**
			30-5909-001-2130 **30-5909-001-2140**
			30-5909-001-2150 **30-5909-001-2160**

Century Business Park, LLC,
a Florida limited liability company

By: _____
Rodney Barreto, Manager

ATTESTED BY:

_____, Witness

_____, Witness

[Notary Acknowledgment Continued on Next Page]

Document prepared by:
Century Homebuilders of South Florida, LLC
7270 NW 12 Street, Suite 410
Miami, FL 33126
Date Prepared: November 10, 2006

_____
Departmental Acceptance Date
(Government Use Only)

STATE OF FLORIDA)

COUNTY OF MIAMI-DADE)

I HEREBY CERTIFY that on this day, before me, an officer duly authorized to take acknowledgements appeared Rodney Barreto, as Manager of Century Business Park, LLC., a Florida limited liability company. He is personally known to me or has produced identification in the form of _____ and who executed the foregoing petition and acknowledged before me that He executed the same for the purposes therein expressed.

WITNESS my hand and official seal at the City of Miami, County of Miami-Dade and State of Florida, this 10th day of, November 2006.

Notary Public Signature: Mireya Carballosa

State of: Florida

My Commission expires: _____

[SEAL]

MIREYA CARBALLOSA
MY COMMISSION # DD 170632
EXPIRES: February 22, 2007
Bonded Thru Notary Public Underwriters

DEPARTMENTAL ACCEPTANCE DATE
(GOVERNMENT USE ONLY)

EXHIBIT "A"

EXHIBIT A TO THE PETITION FOR THE PLAT KNOWN AS **Century gardens at Tamiami** DATED **November 10, 2006** FOR THE CREATION OF SPECIAL TAXING DISTRICT.

Legal Description:

That portion of the Lots, Blocks and the adjacent streets lying in the plat of GREATER MIAMI ESTATES PART TWO, in Section 9, Township 55 South, Range 39 East, according to the Plat thereof recorded in Plat Book 23 at Page 43, of the Public Records of Miami-Dade County, Florida, being more particularly described as follows:

Commence at the Southeast corner of said Section 9, said corner having a Northing of 480709.59 feet and an Easting of 687039.64 based on the State Plane Coordinate System, (1974 Adjustment), Florida East Zone; thence run South 87°25'51" West along the common line between Sections 9 and 16, in Township 55 South, Range 39 East, where the North line of Section 16 was determined in the Final Judgment of Miami-Dade County Circuit Court Case No. 89-15236 (CA 25), for a distance of 2677.15 feet to the North 1/4 corner of said Section 16; thence continue South 87°25'51" West along the said common line for 83.71 feet to the Point of Beginning of the parcel of land herein after described; thence continue South 87°25'51" West along the said common line for 2585.86 feet to a point of intersection with the East right of way line of Canal C-1W defined by the Agreement to Fix Location of Common Boundary between Jack K. Thomas, Jr., Trustee and the South Florida Water Management District as recorded in Official Records Book 11 at Page 3397; thence run North 02°25'09" West along the said East right of way line of Canal C-1W for a distance of 1359.10 feet to a point of rsection with the South line of Block 8 of the plat of HAMMOCKS SHORES THIRD ADDITION, according to the Plat thereof recorded in Plat Book 147 at Page 9, of the Public Records of Miami-Dade County, Florida; thence run North 87°25'34" East along the South line of the plat of HAMMOCKS SHORES THIRD ADDITION, for a distance of 1206.04 feet to a point of intersection with the centerline of SW 154th Avenue as shown on said plat of HAMMOCKS SHORES THIRD ADDITION, the common boundary line defined by the Agreement to Fix Location of Common Boundary between Jack K. Thomas, Jr., Trustee, Corlett et al and Metropolitan Dade County as recorded in Official Records Book 14309 at Page 2097; thence run South 02°23'36" East along the common boundary line defined by the said Agreement for a distance of 407.55 feet to the Southwest corner of Lot 1, Block 5 of HAMMOCKS GARDENS, according to the Plat thereof recorded in Plat Book 157 at Page 16, of the Public Records of Miami-Dade County, Florida; thence run North 87°25'34" East along the South line of the plat of HAMMOCKS GARDENS, for a distance of 690.00 feet to a point of intersection with the centerline of SW 153rd Avenue as shown on said plat of HAMMOCKS GARDENS; thence run North 02°23'36" West along the said centerline, a line 20 feet East of and parallel with the East line of Lot 11 in said Block 5 of HAMMOCKS GARDENS, for a distance of 136.00 feet to a point; thence run North 87°25'34" East along the center line of SW 117th Street as shown on the said plat of HAMMOCKS GARDENS, for a distance of 690.92 feet to a point of intersection with the West line of Tract "A" of AMERIFIRST PARK according to the Plat thereof recorded in Plat Book 127 at Page 65, of the Public Records of Miami-Dade County, Florida, were a portion of said West line was defined by the Agreement to Fix Location of Common Boundary between Jack K. Thomas, Jr., Trustee, Amerifirst Bank and Metropolitan Dade County as recorded in Official Records Book 14309 at Page 2109; thence South 02°22'03" East along said West line for a distance of 1087.77 feet to the Point of Beginning; containing 69.94 acres more or less;

LESS the South 30.00 feet thereof;

AND LESS a parcel of land 20 feet wide by 106 feet long lying within the Southwesterly limits of Block 52, GREATER MIAMI ESTATES PART TWO, in the Southwest 1/4 of Section 9, Township 55 South, Range 39 East, according to the Plat thereof, as recorded in Plat Book 23 at Page 43 of the Public Records of Miami-Dade County, Florida, being more particularly described as follows:

Commence at the Southwest Corner of said Section 9, said Corner having been established by the Miami-Dade County Engineering Department; thence run North 87°25'51" East along the South line of the Southwest 1/4 of said Section 9 for a distance of 7.56 feet to a point on the East Right-of-Way Line of Canal C-1W as defined in Exhibit C of the document recorded in Official Record Book 14311 at Page 3397 of the Public Records of Miami-Dade County, Florida; thence run North 02°18'25" West (North 02°25'09" West calculated) along said East Right-of-Way Line of Canal C-1W for a distance of 30.00 feet to a point on a line that is 30.00 feet North of and parallel to the South line of the Southwest 1/4 of said Section 9, said point being the Point of Beginning of the parcel of land hereinafter described; thence run North 02°18'25" West along said East Right-of-Way Line of Canal C-1W for a distance of 106.00 feet; thence run North 87°25'51" East for a Distance of 20.00 feet; thence run South 02°18'25" East (South 02°25'09" East calculated) for a distance of 106.00 feet to a line 30.00 feet North of and parallel to the South line of the Southwest 1/4 of said Section 9; thence run South 87°25'51" West along said a line 30.00 feet North of and parallel with the South line of the Southwest 1/4 of said Section 9 for a distance of 20.00 feet to the Point eginning; containing an area of 2,120 square feet, more or less.

EXHIBIT B

EXHIBIT B TO THE PETITION FOR THE SUBDIVISION KNOWN AS **CENTURY GARDENS AT TAMIAMI** DATED **NOVEMBER 10th, 2006**, FOR THE CREATION OF A SPECIAL TAXING DISTRICT FOR STREET LIGHTING, LANDSCAPE, WALL AND LAKE MAINTENANCE.

AREAS TO BE MAINTAINED:

LANDSCAPING, WALLS AND ENTRANCE FEATURES ALONG SW. 120th STREET ADJACENT TO PUBLIC RIGHT OF WAY.

MAINTENANCE SCHEDULE:

A.) LAWN / GRASS
- 1.) CUT BIMONTHLY AS REQUIRED
- 2.) FERTILIZE AND WEED CONTROL AS NEEDED
- 3.) TREAT FOR PESTS/DISEASES AS NEEDED
- 4.) IRRIGATE WITH AUTOMATIC SYSTEM AND ELECTRICAL SERVICE FOR SAME.

B.) TREES/SHRUBS
- 1.) TRIM, FERTILIZE AND TREAT FOR PESTS AS NEEDED
- 2.) REPLACE AS REQUIRED

C.) WALL MAINTENANCE
- 1.) MAINTENANCE AND REPAIR OF THE EXTERIOR OF A DECORATIVE MASONRY WALL AND THE REMOVAL OF GRAFFITI AS NEEDED

NOTE: THIS SPECIAL TAXING DISTRICT ENCOMPASES A PRIVATE DRIVE COMMUNITY, IT SHALL BE **DORMANT**; AND SERVICE WILL ONLY COMMENCE FOLLOWING FAILURE (AS DEFINED IN A "GRANT OF PERPETUAL NON-EXCLUSIVE EASEMENT" SUBMITTED AT THE SAME TIME AS THIS PETITION) OF ANY HOME-OWNER'S ASSOCIATION AND/OR COMMUNITY DEVELOPMENT DISTRIC TO PROVIDE THE REQUIRED SERVICES. ASSUMPTION OF MAINTENANCE SERVICES SHALL COMMENCE FOLLOWING ADOPTION OF THIS DISTRICT'S MULTIPURPOSE MAINTENANCE ASSESSMENT ROLL BY THE BOARD OF COUNTY COMMISSIONERS AT A PUBLIC HEARING. OTHER MAINTENANCE SERVICES MAY BE PROVIDED IN THE FUTURE AS SPECIFIED IN THE DISTRICT'S ORDINANCE AND AMENDMENTS THERETO. IN THE EVENT THIS DISTRICT IS ACTIVATED, THE FOLLOWING AREAS MAY BE MAINTAINED:

INGRESS/EGRESS AND COMMON AREAS INCLUDED IN TRACTS "B", "D", "E" AND "F"

STREET LIGHTING

RATE SCHEDULE: SL-1

AVAILABLE:

In all territory served.

APPLICATION:

For lighting streets and roadways, whether public or private, which are thoroughfares for normal flow of vehicular traffic. Lighting for other applications such as: municipally and privately-owned parking lots; parks and recreational areas; or any other area not expressly defined above, is not permitted under this schedule.

TYPE OF INSTALLATION:

FPL-owned fixtures normally will be mounted on poles of FPL's existing distribution system and served from overhead wires. On request of the Customer, FPL will provide special poles or underground wires at the charges specified below. Customer-owned systems will be of a standard type and design, permitting service and lamp replacement at no abnormal cost to FPL.

SERVICE:

Service includes lamp renewals, patrol, energy from dusk each day until dawn the following day and maintenance of FPL-owned Street Lighting Systems.

LIMITATION OF SERVICE:

For Mercury Vapor, Fluorescent and Incandescent luminaires, no additions or changes in specified lumen output on existing installations will be permitted under this schedule after October 4, 1981 except where such additional lights are required in order to match existing installations.

Stand-by or resale service is not permitted hereunder.

CUSTOMER CONTRIBUTIONS:

A Contribution-in-Aid-of-Construction (CIAC) will be required for:

a) the differential cost between employing rapid construction techniques in trenching, backfilling and pole installation work where no obstructions exist, and the added cost to overcome obstructions such as sprinkler systems, paved surfaces (such as sidewalks, curbs, gutters, and roadways), landscaping, sodding and other obstructions encountered along the Street Light System installation route, including repair and replacement. If the Customer elects to perform work such as trenching and restoration, they will be reimbursed by FPL with a credit (not to exceed the total CIAC cost) for the value of this work as determined by FPL;

b) the installation cost of any new overhead distribution facilities and/or the cost of alterations to existing distribution facilities which are required in order to serve the Street Lighting System less four (4) times the additional annual non-fuel energy revenue generated by the installation or alteration of the Street Lighting System, plus where underground facilities are installed, the differential installation cost between underground and overhead distribution facilities.

These costs shall be paid by the Customer prior to the initiation of any construction work by FPL. The Customer shall also pay any additional costs associated with design modifications requested after the original estimate has been made.

(Continued on Sheet No. 8.716)

(Continued from Sheet No. 8.715)

REMOVAL OF FACILITIES:

If Street Lighting facilities are removed either by Customer request or termination or breach of the agreement, the Customer shall pay FPL an amount equal to the original installed cost of the removed facilities less any salvage value and any depreciation (based on current depreciation rates as approved by the Florida Public Service Commission) plus removal cost.

MONTHLY RATE:

Luminaire Type		Lamp Size Initial Lumens/Watts		KWH/Mo. Estimate	Charge for FPL-Owned Unit ($) Fixtures	Maintenance	Energy Non-Fuel **	Total ***	Charge for Customer-Owned Unit $) Relamping/ Energy ****	Energy Only
High Pressure Sodium Vapor		5,800	70	29	3.55	1.36	.60	5.51	1.29	.60
" "		9,500	100	41	3.62	1.37	.85	5.84	1.55	.85
" "		16,000	150	60	3.72	1.40	1.24	6.36	1.94	1.24
" "		22,000	200	88	5.64	1.79	1.81	9.24	2.51	1.81
" "		50,000	400	168	5.71	1.76	3.46	10.93	4.17	3.46
	*	12,800	150	60	3.88	1.56	1.24	6.68	2.17	1.24
" "	*	27,500	250	116	6.00	1.90	2.39	10.29	3.13	2.39
" "	*	140,000	1,000	411	9.04	3.47	8.46	20.97	10.10	8.46
Mercury Vapor	*	6,000	140	62	2.81	1.23	1.28	5.32	1.97	1.28
" "	*	8,600	175	77	2.84	1.23	1.59	5.66	2.28	1.59
" "	*	11,500	250	104	4.74	1.77	2.14	8.65	2.88	2.14
" "	*	21,500	400	160	4.73	1.75	3.30	9.78	4.02	3.30
" "	*	39,500	700	272	6.68	2.96	5.61	15.25	7.17	5.61
" "	*	60,000	1,000	385	6.85	2.88	7.93	17.66	8.91	7.93
Incandescent	*	1,000	103	36				6.91	2.46	.74
"	*	2,500	202	71				7.17	3.18	1.46
"	*	4,000	327	116				8.41	4.16	2.39
"	*	6,000	448	158				9.37	5.03	3.26
"	*	10,000	690	244				11.31	6.93	5.03
Fluorescent	*	19,800	300	122				-	3.43	2.52
"	*	39,600	700	264				-	6.62	5.44

* These units are closed to new FPL installations.
** The non-fuel energy charge is 2.060¢ per kwh.
*** Bills rendered based on "Total" charge. Unbundling of charges is not permitted.
**** New Customer installations of those units closed to FPL installations cannot receive relamping service.

Charges for other FPL-owned facilities:

Wood pole used only for the street lighting system	$ 2.54
Concrete pole used only for the street lighting system	$ 3.49
Fiberglass pole used only for the street lighting system	$ 4.13
Underground conductors not under paving	1.91¢ per foot
Underground conductors under paving	4.66¢ per foot

The Underground conductors under paving charge will not apply where a CIAC is paid pursuant to section "a)" under "Customer Contributions." The Underground conductors not under paving charge will apply in these situations.

(Continued on Sheet No. 8.717)

(Continued from Sheet No. 8.716)

On Customer-owned Street Lighting Systems, where Customer contracts to relamp at no cost to FPL, the Monthly Rate for non-fuel energy shall be 2.060¢ per kwh of estimated usage of each unit plus adjustments. On Street Lighting Systems, where the Customer elects to install Customer-owned monitoring systems, the Monthly Rate for non-fuel energy shall be 2.060¢ per kwh of estimated usage of each monitoring unit plus adjustments. The minimum monthly kwh per monitoring device will be 1 kilowatt-hour per month, and the maximum monthly kwh per monitoring device will be 5 kilowatt-hours per month.

During the initial installation period:
Facilities in service for 15 days or less will not be billed;
Facilities in service for 16 days or more will be billed for a full month.

WILLFUL DAMAGE:

Upon the **second** occurrence of willful damage to any FPL-owned facilities, the Customer will be responsible for the cost incurred for repair or replacement. If the lighting fixture is damaged, based on prior written instructions from the Customer, FPL will:

a) Replace the fixture with a shielded cutoff cobrahead. The Customer shall pay $120.00 for the shield plus all associated costs. However, if the Customer chooses to have the shield installed after the first occurrence, the Customer shall only pay the $120.00 cost of the shield; or

b) Replace with a like unshielded fixture. For this, and each subsequent occurrence, the Customer shall pay the costs specified under "Removal of Facilities"; or

c) Terminate service to the fixture.

Option selection shall be made by the Customer in writing and apply to all fixtures which FPL has installed on the Customer's behalf. Selection changes may be made by the Customer at any time and will become effective ninety (90) days after written notice is received.

Conservation Charge	See Sheet No. 8.030
Capacity Payment Charge	See Sheet No. 8.030
Environmental Charge	See Sheet No. 8.030
Fuel Charge	See Sheet No. 8.030
Franchise Fee	See Sheet No. 8.031
Tax Clause	See Sheet No. 8.031

TERM OF SERVICE:

Initial term of ten (10) years with automatic, successive five (5) year extensions unless terminated in writing by either FPL or the Customer at least ninety (90) days prior to the current term's expiration.

RULES AND REGULATIONS:

Service under this schedule is subject to orders of governmental bodies having jurisdiction and to the currently effective "General Rules and Regulations for Electric Service" on file with the Florida Public Service Commission. In case of conflict between any provision of this schedule and said "General Rules and Regulations for Electric Service", the provision of this schedule shall apply.

STREET LIGHTING AGREEMENT

(a) Installation and/or removal of FPL-owned facilities described as follows:

Lights Installed		
Fixture Rating (in Lumens)	Fixture Type	# Installed

Lights Removed		
Fixture Rating (in Lumens)	Fixture Type	# Removed

Poles Installed	
Pole Type	# Installed

Poles Removed	
Pole Type	# Removed

Conductors Installed

_____ Feet not Under Paving

_____ Feet Under Paving

Conductors Removed

_____ Feet not Under Paving

_____ Feet Under Paving

(b) Modification to existing facilities other than described above (explain fully):

That, for and in consideration of the covenants set forth herein, the parties hereto covenant and agree as follows:

FPL AGREES:

1. To install or modify the street lighting facilities described and identified above (hereinafter called the Street Lighting System), furnish to the Customer the electric energy necessary for the operation of the Street Lighting System, and furnish such other services as are specified in this Agreement, all in accordance with the terms of FPL's currently effective street lighting rate schedule on file at the Florida Public Service Commission (FPSC) or any successive street lighting rate schedule approved by the FPSC.

THE CUSTOMER AGREES:

2. To pay a contribution in the amount of $_____ prior to FPL's initiating the requested installation or modification.

3. To purchase from FPL all of the electric energy used for the operation of the Street Lighting System.

4. To be responsible for paying, when due, all bills rendered by FPL pursuant to FPL's currently effective street lighting rate schedule on file at the FPSC or any successive street lighting rate schedule approved by the FPSC, for facilities and service provided in accordance with this agreement.

5. To provide access, final grading and, when requested, good and sufficient easements, suitable construction drawings showing the location of existing and proposed structures, identification of all non-FPL underground facilities within or near pole or trench locations, and appropriate plats necessary for planning the design and completing the construction of FPL facilities associated with the Street Lighting System.
6. To perform any clearing, compacting, removal of stumps or other obstructions that conflict with construction, and drainage of rights-of-way or easements required by FPL to accommodate the street lighting facilities.

IT IS MUTUALLY AGREED THAT:

7. Modifications to the facilities provided by FPL under this agreement, other than for maintenance, may only be made through the execution of an additional street lighting agreement delineating the modifications to be accomplished. Modification of FPL street lighting facilities is defined as the following:

   a. the addition of street lighting facilities:
   b. the removal of street lighting facilities; and
   c. the removal of street lighting facilities and the replacement of such facilities with new facilities and/or additional facilities.

Modifications will be subject to the costs identified in FPL's currently effective street lighting rate schedule on file at the FPSC, or any successive schedule approved by the FPSC.

8. FPL will, at the request of the Customer, relocate the street lighting facilities covered by this agreement, if provided sufficient right-of-ways or easements to do so. The Customer shall be responsible for the payment of all costs associated with any such Customer-requested relocation of FPL street lighting facilities. Payment shall be made by the Customer in advance of any relocation.

9. FPL may, at any time, substitute for any luminaire/lamp installed hereunder another luminaire/lamp which shall be of at least equal illuminating capacity and efficiency.

10. This Agreement shall be for a term of ten (10) years from the date of initiation of service, and, except as provided below, shall extend thereafter for further successive periods of five (5) years from the expiration of the initial ten (10) year term or from the expiration of any extension thereof. The date of initiation of service shall be defined as the date the first lights are energized and billing begins, not the date of this Agreement. This Agreement shall be extended automatically beyond the initial the (10) year term or any extension thereof, unless either party shall have given written notice to the other of its desire to terminate this Agreement. The written notice shall be by certified mail and shall be given not less than ninety (90) days before the expiration of the initial ten (10) year term, or any extension thereof.

11. In the event street lighting facilities covered by this agreement are removed, either at the request of the Customer or through termination or breach of this Agreement, the Customer shall be responsible for paying to FPL an amount equal to the original installed cost of the facilities provided by FPL under this agreement less any salvage value and any depreciation (based on current depreciation rates as approved by the FPSC) plus removal cost.

12. Should the Customer fail to pay any bills due and rendered pursuant to this agreement of otherwise fail to perform the obligations contained in this Agreement, said obligations being material and going to the essence of this Agreement, FPL may cease to supply electric energy or service until the Customer has paid the bills due and rendered or has fully cured such other breach of this Agreement. Any failure of FPL to exercise its rights hereunder shall not be a waiver of its rights. It is understood, however, that such discontinuance of the supplying of electric energy or service shall not constitute a breach of this Agreement by FPL, nor shall it relieve the Customer of the obligation to perform any of the terms and conditions of this Agreement.

13. The obligation to furnish or purchase service shall be excused at any time that either party is prevented from complying with this Agreement by strikes, lockouts, fires, riots, acts of God, the public enemy, or by cause or causes not under the control of the party thus prevented from compliance and FPL shall not have the obligation to furnish service if it is prevented from complying with this Agreement by reason of any partial, temporary or entire shut-down of service which, in the sole opinion of FPL, is reasonably necessary for the purpose of repairing or making more efficient all or any part of its generating or other electrical equipment.

14. This Agreement supersedes all previous Agreements or representations, either written, oral or otherwise between the Customer and FPL, with respect to the facilities referenced herein and constitutes the entire Agreement between the parties. This Agreement does not create any rights or provide any remedies to third parties or create any additional duty, obligation or undertakings by FPL to third parties.

15. This Agreement shall inure to the benefit of, and be binding upon the successors and assigns of the Customer and FPL.

16. This Agreement is subject to FPL's Electric Tariff, including, but not limited to, the General Rules and Regulations for Electric Service and the Rules of the FPSC, as they are written, or as they may be hereafter revised, amended or supplemented. In the event of any conflict between the terms of this Agreement and the provisions of the FPL Electric Tariff or the FPSC Rules, the provisions of the Electric Tariff and FPSC Rules shall control, as they are now written, or as they may be hereafter revised, amended or supplemented.

IN WITNESS WHEREOF, (The parties hereby caused this Agreement to be executed in triplicate by their duly authorized representative to be effective as of the day and year first written above.

Changes and Terms Accepted:
Miami-Dade County SLID (_____),
Customer (Print or type Organization)

FLORIDA POWER & LIGHT COMPANY

By:_____
Signature (Authorized Representative)

_____
(Print or type name)

Tile:_____

By: _____
(Signature)

_____
(Print or type name)

Title: _____

MEMORANDUM

To: Aristides Rivera, P.E., P.L.S., Director
Public Works Department

Date: January 15, 2002

From: Diane O'Quinn Williams, Director
Department of Planning and Zoning

Subject: Street Lighting, Maintenance of Landscape, Walls Adjacent to Double-Frontage Lots and Lakes Special Taxing Districts

Section: As Required
District: As Required
Council: As Required

Effective September 5, 2001, all tentative plats in the unincorporated area of Miami-Dade County submitted to the Land Development Division of the Public Works Department, must be accompanied by a properly executed petition for all applicable special taxing districts including, but not limited to street lights, maintenance of landscape, walls adjacent to double frontage lots, entrance features and lakes. Final Plats will not be presented to the Board of County Commissioners for consideration until the applicable special taxing districts are created, and all fees have been paid. In that regard, to ensure expeditious processing, this Memorandum may serve as approval for certain future special taxing district application requests as being consistent with the intent and purpose of the adopted 2005-2015 Comprehensive Development Master Plan (CDMP). Policy 4A – Capital Improvement Element states: Appropriate funding mechanisms will be adopted and applied by Miami-Dade County in order to assure the fiscal resources to maintain acceptable levels of service. Such funding mechanisms include special tax districts, municipal taxing service units, local option taxes, user fees, local gas tax, general obligation bond, impact fees, and special purpose authorities, or others as appropriate and feasible (Adopted Components as Amended through April 2001, page IX-10). The provision for services over and above minimum for neighborhoods and communities may be accomplished through the special taxing district as may be prescribed by the code.

The Department of Planning and Zoning (DP&Z) has no objection to a blanket approval with condition to establish future special taxing districts as limited to requests for street lighting, landscape maintenance, walls adjacent to double-frontage lots and lake maintenance districts. The previously noted special taxing districts may be established on the condition that the DP&Z review all landscape maintenance districts for compliance with plantings in public rights-of-way and lake maintenance districts for consistency with Landscape Code (Chapter 18A) Section 18A-6(L) Storm Water Retention/Detention Areas.

DO'QW: GA: TBS

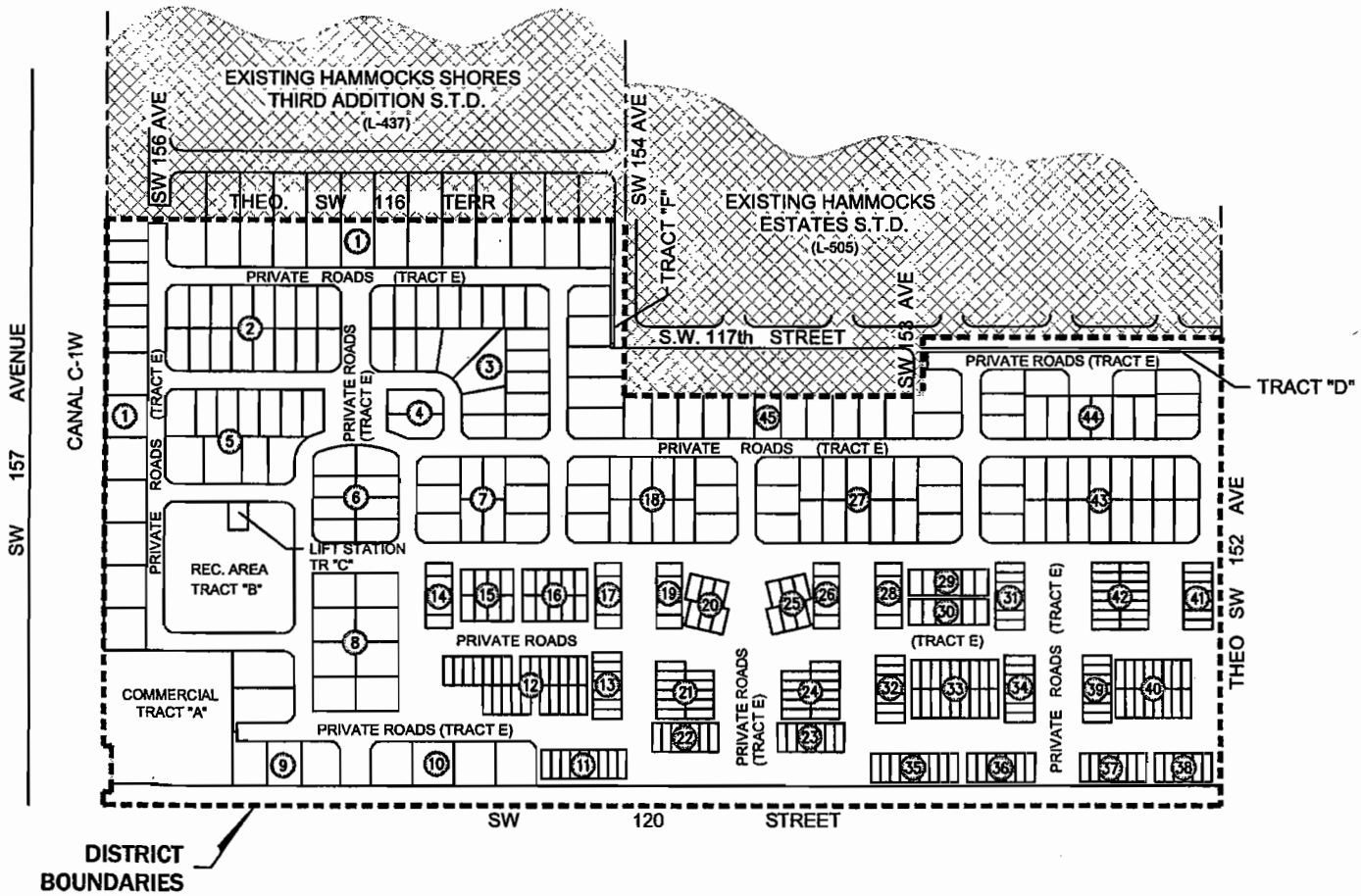

CENTURY GARDENS AT TAMIAMI

MULTIPURPOSE MAINTENANCE AND STREET LIGHTING SPECIAL TAXING DISTRICT

N

28 - 22,000 LUMEN SODIUM VAPOR BRACKET-ARM STREETLIGHTS MOUNTED ON CONCRETE POLES INSTALLED APPROXIMATELLY 100' APART ALONG SW 120 STREET.

7 - EXISTING STREETLIGHTS SHOWN.

SEE ATTACHED SHEETS FOR SERVICE DESCRIPTIONS AND LOCATIONS

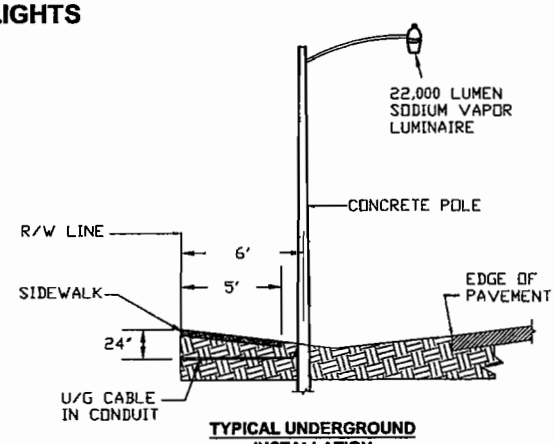

TYPICAL UNDERGROUND INSTALLATION N.T.S.

L-1008 / M-619 (COMM. 0011)
SECTION: 9 - 55 - 39

EXHIBIT "A"

5/24/2007 12:09:48 PM, P. Jean Baptiste/ S.Ferrer

ATTACHMENT TO EXHIBIT "A"

CENTURY GARDENS AT TAMIAMI MULTIPURPOSE MAINTENANCE AND STREET LIGHTING SPECIAL TAXING DISTIRCT

AREAS TO BE MAINTAINED:

LANDSCAPING, WALLS AND ENTRANCE FEATURES ALONG SW 120TH STREET, ADJACENT TO THE PUBLIC RIGHT-OF-WAY.

MAINTENANCE SCHEDULE:

A) LAWN/GRASS

1) CUT BIMONTHLY AS REQUIRED
2) FERTILIZE AND WEED CONTROL AS NEEDED
3) TREAT FOR PESTS/DISEASES AS NEEDED
4) IRRIGATE WITH AUTOMATIC SYSTEM AND ELECTRICAL SERVICE FOR SAME.

B) TREES/SHRUBS

1) TRIM, FERTILIZE AND TREAT FOR PESTS AS NEEDED
2) REPLACE AS REQUIRED.

C) WALL MAINTENANCE

1) MAINTENANCE AND REPAIR OF THE EXTERIOR OF A DECORATIVE MASONRY WALL AND THE REMOVAL OF GRAFFITI AS NEEDED.

NOTE: THE SPECIAL TAXING DISTRICT ENCOMPASSES A PRIVATE DRIVE COMMUNITY, IT SHALL BE **DORMANT**; AND SERVICE WILL ONLY COMMENCE FOLLOWING FAILURE (AS DEFINED IN A "GRANT OF PERPETUAL NON-EXCLUSIVE EASEMENT" SUBMITTED AT THE SAME TIME AS THIS PETITION) OF ANY HOMEOWNERS ASSOCIATION AND/OR COMMUNITY DEVELOPMENT DISTRICT TO PROVIDE THE REQUIRED SERVICES. ASSUMPTION OF MAINTENANCE SERVICES SHALL COMMENCE FOLLOWING ADOPTION OF THIS DISTRICT'S MULTIPURPOSE MAINTENANCE ASSESSMENT ROLL BY THE BOARD OF COUNTY COMMISSIONERS AT A PUBLIC HEARING. OTHER MAINTENANCE SERVICES MAY BE PROVIDED IN THE FUTURE AS SPECIFIED IN THE DISTRICT'S ORDINANCE AND AMENDMENTS THERETO. IN THE EVENT THIS DISTRICT IS ACTIVATED, THE FOLLOWING AREAS MAY BE MAINTAINED:

INGRESS/EGRESS AND COMMON AREAS (TRACTS "B", "D", "E", AND "F").