OFFICIAL FILE COPY
CLERK OF THE BOARD
OF COUNTY COMMISSIONERS
MIAMI-DADE COUNTY, FLORIDA

Memorandum

MIAMI-DADE COUNTY

Date: April 7, 2009

To: Honorable Chairman Dennis C. Moss
and Members, Board of County Commissioners

Agenda Item No. 8(O)(1)(B)

Resolution No. R-350-09

From: Carlos Alvarez
Mayor

George M. Burgess
County Manager

Subject: Recommendation for Approval to Award Contract No. C-2-06-055-BVR: 40ft Hybrid Buses

---

RECOMMENDATION

It is recommended that the Board of County Commissioners waive formal competitive bidding and approve the award of this contract to North American Bus Industries Inc. (NABI) to purchase 13 forty foot diesel/electric hybrid mass transit buses. Said waiver of formal competitive bidding is in the best interest of Miami-Dade County. These buses will replace older transit buses in the fleet. Miami Dade Transit (MDT) is transitioning its bus fleet to hybrid buses in order to benefit from the environmental and energy efficient hybrids.

CONTRACT NO: C-2-06-055-BVR

CONTRACT TITLE: 40 Foot Hybrid Buses

TERM: Two years

CONTRACT AMOUNT: $7,494,000

FUNDING SOURCE: Florida Department of Transportation (FDOT) County Incentive Grant Program (CIGP) in the amount of $3,747,000
People's Transportation Plan (PTP) Surtax in the amount of $3,747,000.
Bus procurement and replacement was included in Exhibit 1 of the PTP, Ordinance No. 02-116.

METHOD OF AWARD: This contract is being awarded as a Bid Waiver. Broward County issued an Invitation for Bid resulting in a competitive award to the low bidder. Miami Dade County is using the results of that competition to award this contract with certain modifications required to deploy the buses.

VENDORS RECOMMENDED FOR AWARD:

Vendor	Address	Principal
North American Bus Industries, Inc. (Non-local vendor)	106 National Drive Anniston, AL 36207	Bill Coryell

PERFORMANCE DATA: There are no known performance issues.

COMPLIANCE DATA:	There are no known compliance issues.
CONTRACT MEASURES:	No measure – Bid Waiver
LIVING WAGE:	The Living Wage Ordinance does not apply
USER ACCESS PROGRAM:	The 2% User Access Program provision is included. The program discount will be collected.
LOCAL PREFERENCE:	Not applicable – Bid Waiver
PROJECT MANAGER:	Namita Uppal, Department of Procurement Management Carlos Delgado, Miami-Dade Transit
ESTIMATED CONTRACT COMMENCEMENT DATE:	Ten days after date adopted by the Board of County Commissioners, unless vetoed by the Mayor.
DELEGATED AUTHORITY:	If this item is approved, the County Mayor or designee will have the authority to exercise, at County Mayor's or designee's discretion, subsequent options-to-renew and other extensions in accordance with the terms and conditions of the contract.

BACKGROUND

Authorization is requested to award this bid waiver contract to purchase diesel/electric hybrid buses. Broward County issued a competitive Invitation for Bid for an initial order of 48 forty foot transit buses. Responses were received from NABI and New Flyer of America. The contract was awarded to NABI. Miami-Dade County is using the results of that competition to award this contract with certain modifications required to deploy the buses.

The Broward County contract includes language required by the Federal Transportation Administration (FTA). Since the County will not be using federal funds for the purchase of these buses, the FTA required language is not necessary. The County will be accessing the Broward County contract as a Bid Waiver because of the use of non-federal funding sources, negotiated changes to bus component requirements, and to establish a two-year term contract. These modifications required by Miami-Dade Transit include color scheme, camera system, radio system, and LED lighting and have resulted in changes in pricing.

This contract will be utilized to procure 13 forty foot low floor hybrid diesel/electric buses, training, technical support, spare parts, and ancillary equipment. These buses will replace older transit buses that are presently in revenue service and will soon reach the end of their useful life. Hybrid buses are more cost effective over the life cycle compared to standard clean diesel technology buses. Savings are achieved through reduced fuel consumption and lower maintenance costs. Hybrid buses also reduce harmful exhaust emissions.

Accessing the results of the competitively established Broward County contract will reduce the County's cost for hybrid buses and allow the expedited deployment of environmentally friendly hybrid technology. Expedited deployment will reduce emissions and maintenance costs associated with operating the older buses. The price of the buses negotiated based on the Broward County contract represents the best value to the County.

Assistant County Manager

MEMORANDUM
(Revised)

TO: Honorable Chairman Dennis C. Moss and Members, Board of County Commissioners

DATE: April 7, 2009

FROM: R. A. Cuevas, Jr. County Attorney

SUBJECT: Agenda Item No. 8(O)(1)(B)

Please note any items checked.

_____ **"4-Day Rule" ("3-Day Rule" for committees) applicable if raised**

_____ **6 weeks required between first reading and public hearing**

_____ **4 weeks notification to municipal officials required prior to public hearing**

_____ **Decreases revenues or increases expenditures without balancing budget**

_____ **Budget required**

_____ **Statement of fiscal impact required**

✓ **Bid waiver requiring County Mayor's written recommendation**

_____ **Ordinance creating a new board requires detailed County Manager's report for public hearing**

_____ **Housekeeping item (no policy decision required)**

_____ **No committee review**

Approved _____ Mayor
Veto _____
Override _____

Agenda Item No. 8(O)(1)(B)
4-7-09

RESOLUTION NO. R-350-09

RESOLUTION APPROVING AWARD OF A CONTRACT TO PURCHASE 13 FORTY FOOT DIESEL/ELECTRIC HYBRID MASS TRANSIT BUSES IN THE AMOUNT OF $7,494,000 FOR MIAMI-DADE TRANSIT; AUTHORIZING USE OF CHARTER COUNTY TRANSIT SYSTEM SURTAX; WAIVING THE REQUIREMENTS OF SECTION 5.03(D) OF THE HOME RULE CHARTER AND SECTION 2-8.1 OF THE MIAMI-DADE COUNTY CODE PERTAINING TO COMPETITIVE BID PROCEDURES, BY A TWO-THIRDS VOTE OF THE BOARD MEMBERS PRESENT; AND AUTHORIZING THE COUNTY MAYOR OR COUNTY MAYOR'S DESIGNEE TO EXERCISE OPTIONS-TO-RENEW ESTABLISHED THEREUNDER

WHEREAS, this Board finds it to be in the best interest of Miami-Dade County to waive formal bid procedures in this instance; and

WHEREAS, this Board desires to accomplish the purposes outlined in the accompanying memorandum, a copy of which is incorporated herein by reference,

NOW, THEREFORE, BE IT RESOLVED BY THE BOARD OF COUNTY COMMISSIONERS OF MIAMI-DADE COUNTY, FLORIDA, that:

Section 1. This Board approves the award of a contract to purchase 13 forty foot diesel/electric hybrid mass transit buses in the amount of $7,494,000 for Miami-Dade Transit and authorizes the County Mayor or County Mayor's designee, to exercise options-to-renew established thereunder.

Section 2. This Board authorizes award of this contract as a Bid Waiver because of the use of non-federal funding sources, as well as negotiated changes to bus component requirements.

Section 3. This Board authorizes the waiver of formal bid procedures pursuant to Section 5.03 (D) of the Home Rule Charter and Section 2-8.1 of the County Code by two-third (2/3s) vote of the Board members present.

The foregoing resolution was offered by Commissioner **Katy Sorenson**, who moved its adoption. The motion was seconded by Commissioner **Sen. Javier D. Souto** and upon being put to a vote, the vote was as follows:

Dennis C. Moss, Chairman **aye**
Jose "Pepe" Diaz, Vice-Chairman **aye**

Bruno A. Barreiro	**absent**	Audrey M. Edmonson	**aye**
Carlos A. Gimenez	**nay**	Sally A. Heyman	**aye**
Barbara J. Jordan	**absent**	Joe A. Martinez	**absent**
Dorrin D. Rolle	**aye**	Natacha Seijas	**absent**
Katy Sorenson	**aye**	Rebeca Sosa	**absent**
Sen. Javier D. Souto	**aye**		

The Chairperson thereupon declared the resolution duly passed and adopted this 7th day of April, 2009. This resolution shall become effective as follows: (1) ten (10) days after the date of its adoption unless vetoed by the Mayor, and if vetoed, shall become effective only upon an override by this Board, and (2) either i) the Citizens' Independent Transportation Trust (CITT) has approved same, or ii) in response to the CITT's disapproval, the County Commission re-affirms its award by two-thirds (2/3) vote of the Commission's membership and such reaffirmation becomes final.

MIAMI-DADE COUNTY, FLORIDA

BY ITS BOARD OF
COUNTY COMMISSIONERS

HARVEY RUVIN, CLERK

By: **Kay Sullivan**
Deputy Clerk

Approved by County Attorney as
to form and legal sufficiency.

Bruce Libhaber

February 25, 2009

Mr. Bill Coryell
North American Bus Industries, Inc.
3450 E. Philadelphia Street
Ontario, CA 91761

Re: Broward County Contract # C-2-06-055-BVR, Buses-Diesel and Hybrid Electric

Dear Mr. Coryell:

Miami-Dade County, hereinafter referred to as the County, is accessing the above referenced contract with North American Bus Industries, Inc., hereinafter referred to as the Contractor, to purchase thirteen (13) 40' Hybrid Diesel-Electric Buses and associated tools/equipment and training for Miami-Dade Transit Department (MDT). Prior to issuing a purchase order, the County requires acceptance of the following requirements:

1) The Contractor shall provide products and services to the County in accordance with requirements specified in Contract # C-2-06-055-BV and all associated amendments; except for the changes specified in this Letter of Agreement, hereinafter referred to as the Agreement.

2) The County's changes to the specifications in the above referenced contract are specified in Appendix A to this Agreement.

3) The Contractor shall deliver the buses and associated products and services in accordance with the delivery schedule specified in Appendix B to this Agreement.

4) The Contractor shall be paid in accordance with Appendix C to this Agreement.

5) Order of Precedence: If there is a conflict between or among the provisions of this Agreement, the order of precedence is as follows: 1) these terms and conditions dated February 25, 2009 and all appendices herein, and 2) Broward County Contract documents incorporated herein by reference.

   Broward County contract documents consist of the following:

   a) Purchase Order issued by Broward County
   b) Letters of Clarification issued by Broward County
   c) First Amendment to Memorandum of Understanding (MOU) between the Contractor and Broward County
   d) MOU between the Contractor and Broward County
   e) Broward County Invitation to Bid # C-2-06-055-BV and any associated addenda and attachments thereof
   f) Proposal submitted by the Contractor in response to the Broward County ITB # C-2-06-055-BV

6) Pursuant to Miami-Dade County Ordinance No. 97-215, the purchase order will include the Independent Private Sector Inspector General requirements. This ordinance requires a ¼ of 1% reduction from the total price of the vendor's invoice.

7) Pursuant to Miami-Dade County Budget Ordinance No. 03-192, which implements the User Access Program (UAP), new contract awards issued by Department of Procurement Management require a 2% reduction from the total price of any vendor invoice issued.

8) The County is not utilizing Federal Funds to purchase products and services through this Agreement. Hence, the Federal Transportation Authority (FTA) provisions do not apply to this Agreement.

9) NOTICE-TO-PROCEED (NTP)

The Contractor shall not proceed with the construction of any buses or equipment, nor shall the County be liable for any costs incurred, until the Notice-To-Proceed has been issued by the County for the specified equipment. The NTP and purchase order will be issued by the County by April 30, 2009 or both parties shall have no obligation under this agreement.

10) The Contract shall become effective on April 30, 2009 and shall remain in effect for two (2) years. Expressed and/or implied warranty shall remain in effect regardless of the term of the contract.

11) NOTICE REQUIREMENTS

All notices required or permitted under this agreement shall be in writing and shall be deemed sufficiently served if delivered by Registered or Certified Mail, with return receipt requested; or delivered personally; or delivered via fax or e-mail (if provided below) and followed with delivery of hard copy; and in any case addressed as follows:

(i) **<u>to the County</u>**

a) to the Project Manager:

Miami-Dade County
Transit Department
3300 NW 32nd Avenue
Miami, FL 33142
Attention: Carlos Delgado
Phone: (305) 637-3709

and,

b) to the Contract Manager:

Miami-Dade County
Department of Procurement Management
111 N.W. 1st Street, Suite 1375

Miami, FL 33128-1974
Attention: Director
Phone: (305) 375-5548

(ii) <u>To the Contractor</u>

North American Bus Industries, Inc.
3450 E. Philadelphia Street
Ontario, CA 91761

Attention: Bill Coryell
Phone: (909) 815-6961
E-mail: bill.coryell@nabiusa.com

Either party may at any time designate a different address and/or contact person by giving notice as provided above to the other party. Such notices shall be deemed given upon receipt by the addressee.

12) Insurance Requirements: The Contractor shall provide insurance certificate as per the requirements specified in the Broward County Contract. Miami-Dade County must be shown as additional insured with respect to General Liability. The mailing address of Miami-Dade County 111 N.W. 1st Street, Suite 1300, Miami, Florida 33128-1974, as the certificate holder, must appear on the certificate of insurance.

13) This agreement incorporates and includes all prior negotiations, correspondence, conversations, agreements, and understandings applicable to the matters contained herein. The Contractor agrees that there are no commitments, agreements, or understandings concerning the subject matter of this Agreement that are not contained herein. Accordingly, it is agreed that no deviation from the terms hereof shall be predicated upon any prior representations or agreements, whether oral or written. It is further agreed that any oral representations or modifications concerning this Agreement shall be of no force or effect, and that this Agreement may be modified, altered or amended only by a written amendment approved by the County and executed by the Contractor.

14) PAYMENT FOR SERVICES/AMOUNT OBLIGATED

The Contractor warrants that it has reviewed the County's requirements and has asked such questions and conducted such other inquiries as the Contractor deemed necessary in order to determine the price the Contractor will charge to provide the Work and Services to be performed under this Contract. The compensation for all Work and Services performed under this Contract, including all costs associated with such Work and Services, shall be in accordance with Appendix C, Price Schedule. The County shall have no obligation to pay the Contractor any additional sum in excess of this amount, except for a change and/or modification to the Contract, which is approved and executed in writing by the County and the Contractor.

All Services undertaken by the Contractor before County's approval of this Contract and/or issuance of NTP shall be at the Contractor's risk and expense.

15) METHOD AND TIMES OF PAYMENT

The Contractor agrees that under the provisions of this Agreement, the Contractor may bill the County after Final Acceptance by the County, upon invoices certified by the Contractor pursuant to Appendix C – Price Schedule. All invoices shall be taken from the books of account kept by the Contractor and shall show the County's contract number, and shall have a unique invoice number assigned by the Contractor. It is the policy of Miami-Dade County that payment for all purchases by County agencies and the Public Health Trust shall be made in a timely manner and that interest payments be made on late payments. In accordance with Florida Statutes, Section 218.74 and Section 2-8.1.4 of the Miami-Dade County Code, the time at which payment shall be due from the County or the Public Health Trust shall be forty-five days from receipt of a proper invoice. The time at which payment shall be due to small businesses shall be thirty (30) days from receipt of a proper invoice. All payments due from the County or the Public Health Trust, and not made within the time specified by this section shall bear interest from thirty (30) days after the due date at the rate of one percent (1%) per month on the unpaid balance. Further, proceedings to resolve disputes for payment of obligations shall be concluded by final written decision of the County Manager, or his or her designee(s), not later that sixty (60) days after the date on which the proper invoice was received by the County or the Public Health Trust.

The County will not release any payment for hybrid buses until the Final Acceptance by the County as specified in Appendix A, item # 30. All payments shall be made as provided herein less any amounts for damages in accordance with Appendix A, item # 29.

Invoices and associated back-up documentation shall be submitted in duplicate by the Contractor to the County as follows:

Miami-Dade County
3300 NW 32nd Avenue
Miami, FL 33142
Attention: Carlos Delgado

The County may at any time designate a different address and/or contact person by giving written notice to the other party.

16) The Contractor shall furnish all labor, materials, tools, supplies, and other items required to perform the Work and Services that are necessary for the completion of this Agreement. All Work and Services shall be accomplished at the direction of and to the satisfaction of the County's Project Manager.

17) VENDOR REGISTRATION AND FORMS/CONFLICT OF INTEREST

a) Vendor Registration

The Contractor shall be a registered vendor with the County – Department of Procurement Management, for the duration of this Agreement. In becoming a Registered Vendor with Miami-Dade County, the Contractor confirms its knowledge of and commitment to comply with the following:

1. ***Miami-Dade County Ownership Disclosure Affidavit***
   (Section 2-8.1 of the County Code)
2. ***Miami-Dade County Employment Disclosure Affidavit***
   (Section 2.8-1(d)(2) of the County Code)
3. ***Miami-Dade Employment Drug-free Workplace Certification***
   (Section 2-8.1.2(b) of the County Code)
4. ***Miami-Dade Disability and Nondiscrimination Affidavit***
   (Section 2-8.1.5 of the County Code*)*
5. ***Miami-Dade County Debarment Disclosure Affidavit***
   (Section 10.38 of the County Code)
6. ***Miami-Dade County Vendor Obligation to County Affidavit***
   (Section 2-8.1 of the County Code)
7. ***Miami-Dade County Code of Business Ethics Affidavit***
   (Section 2-8.1(i) and 2-11(b)(1) of the County Code through (6) and (9) of the County Code and Section 2-11.1(c) of the County Code)
8. ***Miami-Dade County Family Leave Affidavit***
   (Article V of Chapter 11 of the County Code)
9. ***Miami-Dade County Living Wage Affidavit***
   (Section 2-8.9 of the County Code)
10. ***Miami-Dade County Domestic Leave and Reporting Affidavit***
    (Article 8, Section 11A-60 11A-67 of the County Code)
11. ***Subcontracting Practices***
    (Ordinance 97-35)
12. ***Subcontractor /Supplier Listing***
    (Section 2-8.8 of the County Code)
13. ***Environmentally Acceptable Packaging***
    (Resolution R-738-92)
14. ***W-9 and 8109 Forms*** (as required by the Internal Revenue Service)
15. ***FEIN Number or Social Security Number***
    In order to establish a file, the Contractor's Federal Employer Identification Number (FEIN) must be provided. If no FEIN exists, the Social Security Number of the owner or individual must be provided. This number becomes Contractor's "County Vendor Number". To comply with Section 119.071(5) of the Florida Statutes relating to the collection of an individual's Social Security Number, be aware that the County requests the Social Security Number for the following purposes:

- Identification of individual account records
- To make payments to individual/Contractor for goods and services provided to Miami-Dade County
- Tax reporting purposes
- To provide a unique identifier in the vendor database that may be used for searching and sorting departmental records

16. ***Office of the Inspector General*** (Section 2-1076 of the County Code)
17. ***Small Business Enterprises***
    The County endeavors to obtain the participation of all small business enterprises pursuant to Sections 2-8.2, 2-8.2.3 and 2-8.2.4 of the County Code and Title 49 of the Code of Federal Regulations.
18. ***Antitrust Laws***
    By acceptance of any contract, the Contractor agrees to comply with all antitrust laws of the United States and the State of Florida.

b) Conflict of Interest

Section 2-11.1(d) of Miami-Dade County Code as amended by Ordinance 00-1, requires any county employee or any member of the employee's immediate family who has a controlling financial interest, direct or indirect,

with Miami-Dade County or any person or agency acting for Miami-Dade County from competing or applying for any such contract as it pertains to this solicitation, must first request a conflict of interest opinion from the County's Ethic Commission prior to their or their immediate family member's entering into any contract or transacting any business through a firm, corporation, partnership or business entity in which the employee or any member of the employee's immediate family has a controlling financial interest, direct or indirect, with Miami-Dade County or any person or agency acting for Miami-Dade County and that any such contract, agreement or business engagement entered in violation of this subsection, as amended, shall render this Agreement voidable. For additional information, please contact the Ethics Commission hotline at (305) 579-2593.

18) Contractor agrees to comply, subject to applicable professional standards, with the provisions of any and all applicable Federal, State and the County orders, statutes, ordinances, rules and regulations which may pertain to the Services required under this Agreement.

By: _____

Name: DAVID C. WARREN

Title: SR. VICE PRESIDENT

Date: 2/26/09

Attest: April R Morgan
Corporate Secretary/Notary

My Commission Expires August 29, 2011

Corporate Secretary/Notary

Attachments:
Appendix A: Miami-Dade County changes to the Broward County Specifications
Appendix B: Delivery Schedule
Appendix C: Price Schedule
Appendix D: Miami-Dade County Affidavits
Appendix E: Paint and Graphics
Appendix F: Seating Layout

APPENDIX A

Miami-Dade County Changes to the Broward County Specifications

The Broward County Contract documents include Attachment A (Specifications) to the Invitation To Bid # C-2-06-055-BV. All section references (including any revisions via addendum or amendments to Broward Contract documents) listed below refer to Attachment A. The County's changes to the Broward County specifications are listed below. Any references to these specifications in the Broward County Contractual documents are hereby changed to the amended language below.

1) Section 9.3 Body – General - Shell (Finish and color): The Broward County exterior scheme is hereby deleted and replaced by three-color exterior scheme attached herein as Appendix E, Paint and Graphics. The three colors are: Silver, Green and Blue.

2) Section 9.4 Body – General - Shell (Numbering and Signing): The Broward County Numbering and Signing description is hereby deleted and replaced by the following:

   Section 9.4 Numbering and Signing (Revised):

   9.4.1 The County logo must be incorporated into the graphics to be used on the exterior of the bus. The logo must be displayed, at minimum, on the curb side and road side of the bus. The colors to be used in the logo are blue and green (PMS numbers for colors to be issued by addendum at a later date). Sample logo will be provided by MDT prior to production of buses.

   9.4.2 A five-digit identification number assigned to the vehicle by MDT, shall be placed by the Contractor below the front windshield on the right side of the front panel, over front entry door, over driver's window, at the left and right side near the rear of the bus, and on the top curbside of the rear. Decal vehicle numbers shall be 4" high Helvetica Bold black on the sides and front, white on the rear. The vehicle identification number shall be painted on the roof of the bus using black 24" Swis721 Bt numerals.

   9.4.3 Decals shall be provided in compliance with the ADA requirements defined in 49 CFR Part 38, Subpart B, 38.27. International symbol of accessibility, a "Wheelchair" decal with a blue background and white wheelchair symbol shall be placed on or adjacent to the wheelchair ramp door. A decal with a blue background, white wheelchair symbol, white lettering and trilingual (English, Spanish, and Creole) instructions, "Please allow wheelchair customers passengers to board/exit first" shall be placed by the passenger door. A "Kneeling Bus" trilingual decal with black letters on yellow background shall be placed adjacent to the entry door below the windows.

9.4.4 A "People's Transportation Plan ½ Penny" decal shall be required in three locations on the bus. A sample will be provided by MDT prior to production of buses.

9.4.5 A decal indicating the location of the master battery switch shall be located on the exterior access panel.

9.4.6 Exact location and placement of decals, insignia and paint scheme will be provided to the Contractor prior to the production of the pilot bus.

9.4.7 Exterior graphics material shall be 3M Scotchlite Reflective Sheeting Series 690 with Controltac adhesive. Film shall be pigmented. Silk-screened decals will not be acceptable.

9.4.8 Application material shall be 3M Application Tape, SCPM-3.

9.4.9 Prespacing material shall be 3M Prespacing Tape, SCPS-2.

9.4.10 A detailed signs and decals description shall be submitted to MDT for review and approval prior to production.

3) Section 9.6 Body – General - Shell (Passenger Windows): The Broward County passenger windows with opening transom venting sections are hereby deleted and replaced by hidden frame full fixed glazing egress passenger window assemblies with the exception of the driver's window and destination window assemblies.

4) Section 11.0 Body – Exterior and Applied Panels: The following paragraph is added as Section 11.6 Bus Number:

   The belt guard and the wheelchair ramp belly-pan shall have the bus number permanently marked.

5) Section 12.0 Body- Interior: The following paragraph is added as Section 12.7 Decal package:

   The County's decal package define that Contractor shall furnish and apply all decals. Final sizes and locations shall be approved by MDT. Contractor shall provide the list of all decals, including samples or drawings of all listed decals, for MDT approval prior to production. Trilingual (English, Spanish, and Creole) instructions for decals containing identification of windows, hatches, etc., shall be provided.

6) Section 16.1.5 Body – Passenger Doors (Door Height Above Pavement): The words "rear door touch bar" are hereby deleted from the 2nd paragraph under this section. Following paragraph is hereby added to this section:

The rear door shall be equipped with a Vapor CLASS acoustic sensor system to passengers to activate the opening of the door after the operator, by means of the door control switch, has unlocked it.

7) Section 21.0 Body - Operating Components – Lighting, Controls, Instruments: Following are the changes to this Section:

Section 21.9 (Interior Step Well Light):

Rear Exterior LED Yield sign is not required.

Section 21.12 (Passenger Interior Lighting) is hereby deleted in its entirely and replaced by the following:

Section 21.12 Passenger Interior Lighting (Revised)

21.12.1 The interior lighting system shall be the I/O Control LED based Dinex Lighting System.

21.12.2 The following indications for interior lights shall be used to eliminate glare in the driver's area and on the windows:

Interior lights shall be controlled by a three- position switch. When the switch is in the "OFF" position, all interior lights are extinguished regardless of the master run switch position. When "ON", all interior lights are illuminated regardless of the master run switch position. When in "NORMAL" with the master run switch in "NIGHT RUN", the lamps are all illuminated when the entry door is OPEN. When in "NORMAL" with the master run switch in "NIGHT RUN", the first and second curbside module of interior lights and the first roadside module of interior light shall be designed as to automatically extinguish when the entry door is closed.

A description of the feature used for the first light modules extinguish when the front door opens shall be submitted to MDT for review and approval prior to production.

21.12.3 The floor surface in the aisle shall be illuminated to no less than 10 foot-candles. Floor surface in the vestibule shall be illuminated to no less than 4 foot-candles with the front door open and to no less than 2 foot-candles with the front door closed. Interior passenger compartment lighting shall not be installed above the driver's side window and the front door. Lamp fixtures and lenses shall be fire resistant and shall not drip flaming material onto seats or interior trim if burned. The fixtures shall be sealed to prevent accumulation of dust and insects, but shall be easily openable on hinges for cleaning and service. The lenses shall be retained in a closed position and, if threaded fasteners are used, they must be captive in the lens with cross recessed type heads.

Section 21.13 (Driver's Lighting) is hereby deleted in its entirely and replaced by the following:

Section 21.13 Driver's Lighting (Revised)

The driver's area shall have a light to provide general illumination and it shall illuminate the half of the steering wheel nearest the driver to a level of 10 to 15 foot candles. This light shall be controlled by a switch that is convenient to the driver. Power for this light must be turned off when the master switch is in the "off" position.

8) Section 22.0 Body-Interior Trim is hereby deleted in its entirely and replaced by the following:

Section 22.0 Body-Interior Trim (Revised)

22.1 General Requirements

This interior shall be generally pleasing, simple, modern, and free from superficial design motifs. It shall have no sharp depressions or inaccessible areas and shall be easy to clean and maintain. To the extent practicable, all interior surfaces more than 10 inches below the lower edge of the side windows or windshield shall be shaped so that objects placed on them fall to the floor when the bus is parked on a level surface.

Handholds, lights, air vents, armrests, and other interior fittings shall appear to be integral with the bus interior. Trim and attachment details shall be kept simple and unobtrusive. Interior trim shall be secured to avoid resonant vibrations under normal operational conditions. There shall be no sharp, abrasive edges and surfaces and no unnecessary hazardous protuberances.

22.2 Materials

Materials shall be selected on the basis of maintenance, durability, appearance, safety, flammability, and tactile qualities. Materials shall be strong enough to resist everyday abuse and vandalism and shall be resistant to scratches and markings.

All plastic and synthetic materials used inside the bus shall be fire resistant to comply with FMVSS-302.

Materials used in the construction of the Passenger Compartment of the bus shall be in accordance with the Recommended Fire Safety Practices defined in FTA Docket 90A, dated October 20, 1993. Materials entirely enclosed from the passenger compartment, such as insulation within the sidewalls, and smaller components and items, such as switch knobs and small light lenses, shall be exempted from this requirement.

The Contractor shall certify that combustible materials to be used in the construction of these buses have been tested by a recognized testing laboratory and that the results are within the recommended limits as specified by the Federal Transit Administration.

22.3 Panels

Interior panels may be integral with, or applied to, the basic bus structure. They shall be decorated in accordance with the interior specified. Use of moldings and small pieces of trim shall be minimized, and all parts shall be functional.

Interior panels shall be attached so that there are no exposed edges or rough surfaces. Panels and fasteners shall not be easily removable by passengers. Interior trim fasteners, where required, shall be rivets or cross-recessed head screws.

Sturdy divider panels constructed of durable, unpainted, corrosion-resistant material complementing the interior trim shall be provided to act as both a physical and visual barrier for seated passengers. Modesty panels shall be located at doorways to protect passengers on adjacent seats, and along front edge of rear upper level. Design and installation of modesty panels located in front of forward facing seats shall include a handhold/grabhandle along its top edge. These dividers shall be mounted on the sidewall and shall project toward the aisle no farther than passenger knee projection in longitudinal seats or the aisle side of the transverse seats. Modesty panels shall extend no higher than the lower daylight opening of the side windows and those forward of transverse seats shall extend downward to a level between 1-1/2 and 1 inches above the floor. Panels forward of longitudinal seats shall extend to below the level of the seat cushion. Dividers positioned at the doorways shall provide no less than a 2-1/2-inch clearance between the modesty panel and the opened door to protect passengers from being pinched. Modesty panels installed at doorways shall be equipped with grab rails. The modesty panel and its mounting shall withstand a static force of 250 pounds applied to a four-inch by four-inch area in the center of the panel without permanent visible deformation.

Where doors open inward (slide glide), barriers shall prevent passengers from standing where they could be struck by an opening door.

22.4 Sidewall Panels

Interior sidewall trim panels shall be .125 inch thick melamine or approved equal. It shall permit easy removal of paint, greasy fingerprints, and ink from felt tip pens. Panels shall be easily replaceable and tamper resistant. They shall be reinforced, as necessary, to resist vandalism and other rigors of transit bus service. Colors and patterns shall be selected by MDT prior to construction. Interior mullion trim, moldings, and trim strips shall be stainless steel, anodized aluminum or plastic, colored to coordinate with the trim panels. Individual trim panels and parts shall be interchangeable to the extent practicable. Untrimmed areas shall be painted and finished.

22.5 Headlining

Headlining panels shall be white melamine or approved equal. Headlining shall be supported to prevent buckling, drumming, or flexing and shall be secured without loose edges. Headlining materials shall be treated or insulated to prevent marks due to condensation where panels are in contact with metal members. Moldings and trim strips, as required to make the edges tamperproof, shall be stainless steel, aluminum, or plastic, colored to complement the ceiling material. Headlining panels covering operational equipment that is mounted above the ceiling shall be on hinges for ease of service, but retained to prevent inadvertent opening.

22.6 Rear Bulkhead

The rear bulkhead and rear interior surfaces shall be materials suitable for exterior skin, painted and finished to exterior quality, or paneled with melamine type material or plastic, and trimmed with stainless steel, anodized aluminum, or plastic. Colors, patterns, and materials shall match or coordinate with the balance of the bus interior.

The rear bulkhead paneling shall be contoured in such a way that it shall not have a tendency to collect trash. Any air vents in this area shall be louvered to reduce air flow noise and to reduce the probability of trash or litter being thrown or drawn through the grille. The panel, or sections thereof, shall be removable to service components located on the rear bulkhead.

22.7 Front End

The entire front end of the bus shall be sealed to prevent debris accumulation behind the dash and to prevent the driver from kicking or fouling wiring and other equipment with his feet. The front end shall be free from protrusions that are hazardous to passengers standing or walking in the bus during rapid decelerations. Paneling across the front part of the bus and any trim around the driver's compartment shall be formed metal or plastic material. Formed metal dash panels shall be painted and finished to exterior quality. Plastic dash panels shall be vandal-resistant, replaceable, and reinforced to support dash mounted communications and fare collection equipment required by MDT. All colored, painted and plated parts forward of the driver's barrier shall be finished with a dull matte black color.

22.8 Interior Advertising Card Racks

Interior advertising card racks are to be provided along each side of vehicle to accommodate eleven by twenty-eight inch (11" x 28") advertising cards. Butt joints of panel sections must be covered with trim strips.

An ad frame to accommodate approximately twenty-one by twenty-two inch (21" x 22") advertising card signs shall be provided on the driver's barrier.

Four (4) "Take One" boxes shall be installed in the interior passenger compartment. The boxes shall be aluminum, painted satin black, approximately 4½" wide x 5½" high x 1" deep. Exact locations will be determined prior to production.

22.9 Interior Access Panels

Access for maintenance and replacement of equipment shall be provided by panels and doors that appear to be an integral part of the interior. Removal of fixtures or equipment unrelated to the repair task to gain access shall be minimized. Access doors shall be hinged with props, as necessary, to hold the doors out of the mechanic's way.

Panel fasteners shall be tamper proof and standardized so that only one tool is required to service all special fasteners within the bus. Access doors for the door actuator compartment shall be secured with quarter turn latches operable with the door control handle, and shall prevent entry of mechanism lubricant into the bus interior. All fasteners that retain access panels shall be captive in the cover.

9) Section 23.0 Body -Passenger Seats is hereby deleted in its entirety and replaced by the following:

Section 23.0 Body -Passenger Seats (Revised)

23.1 Seating Arrangement

Barriers or modesty panels shall be provided in front of the first forward facing seats on both sides of the bus. If a bi-level floor is used, barriers or modesty panels shall be provided at the elevation change in front of the upper level seats. Weather shields of clear ½" polycarbonate shall be installed forward of the rear exit door above the seat back. The clear weather shield shall be covered on both sides with a removable clear scratch guard, Lexan Nu-View or approved equal. The aisle between the seats shall be no less than 20 inches wide at seated passenger hip height. Seating Layout is attached herein as Appendix F.

23.2 Seat Design

Passenger seats shall be of a cantilever design with vandal resistant removable inserts, American Seating "Insight" model with Bus Tex 2341/890 fabric.

The general design of the seat shall offer superior product and functional values with features providing optimum comfort and safety for the passenger. The design of the seat shall be based on requirements defined

to obtain a structure which will conform to the strength, performance, and dynamic tests specified in the Testing and Strength Requirements Section. The passenger seat, frame, and its supporting structure shall be constructed and mounted so that space under the seat is maximized to increase wheelchair maneuvering room and is completely free of obstructions to facilitate cleaning. The lowest part of the seat assembly that is within 12 inches of the aisle shall be at least 10 inches above the floor. The underside of the seat and the sidewall shall be configured to prevent debris accumulation.

The two-passenger transverse seats shall be fixed, forward-facing cantilever type, designed, engineered and installed in accordance with layout drawings. The use of pedestals shall be limited to areas which cannot be supported by the side wall of the bus. Longitudinal, flip-up, and rear settee seats shall conform to the same general design as the two-passenger transverse seats. Longitudinal and rear settee backs shall be individual to correspond in configuration to transverse seat backs and are to be mounted on a common frame. All visible steel (cantilever frame and pedestals if applicable) and mounting hardware shall be stainless steel. No wood shall be used in the seats. All materials used in the seat assembly shall meet the flammability requirements of Federal Motor Vehicle Safety Standard No. 302.

Seat installation procedures and required torque values shall be provided to MDT prior to production. Seat mounting fasteners shall be marked with torque paste after being properly torqued.

23.3 Grab Rails

The seatback of each transverse seat shall have an energy absorbing grab rail or handhold fabricated of a molded plastic material no less than 7/8 inch in diameter. The handhold shall extend above the seat back near the aisle so that standees shall have a convenient vertical assist, no less than 4 inches long, that may be grasped with the full hand. This handhold shall not cause a standee using this assist to interfere with a seated 50th-percentile male passenger. The handhold shall also be usable by a 5th-percentile female, as well as by larger passengers, to assist with seat access/egress for either transverse seating position. The seat back handhold may be deleted from seats that do not have another transverse seat directly behind and where vertical assist is provided. Seat back handholds shall not be included in the design of longitudinal seats. The handhold shall not be a safety hazard during severe decelerations. The handhold shall be readily replaceable but attached securely to provide adequate and firm support. The overall design of the handhold shall be aesthetically pleasing and shall enhance the general appearance of the seat.

Armrests shall be included on the ends of each set of longitudinal seats except where they abut the rear of a transverse seat, a modesty panel, a wheelchair barrier, the operator's barrier, and these fixtures perform the function of restraining passengers from sliding forward off the seat.

Armrests are not required on longitudinal seats located in the wheelchair parking area that fold up when the armrest on the adjacent fixed longitudinal seat is within 1-1/2 to 3-1/2 inches of the end of the seat cushion. Armrests shall not be included in the design of transverse seats. Provide tubular stainless steel armrests on the rear ends of any longitudinal seats immediately in front of the rear cross-seats. Armrests shall be located from 7 to 9 inches above the seat cushion surface and shall be free from sharp protrusions that form a safety hazard.

23.4 Panels

Panels shall be color coordinated, vandal-resistant, able to withstand or repel repeated vandalism from marking pens and similar writing instruments, and shall not be damaged by repeated applications of commonly-used graffiti-removal chemicals.

The back panel shall be made of high impact strength thermoplastic or ABS sheet of 1/8 inch nominal thickness, of a color and texture compatible with the chosen color scheme. The back panel shall cover the rear of the seat back frame, and shall be free of sharp corners and protrusions. Back panel may be separate or integral with seat shell. The rear areas shall be recessed for increased passenger knee clearance.

23.5 Interchangeability

Seat assemblies and components of identical seats shall be mechanically interchangeable.

23.6 Upholstery and Color

The seat upholstery shall be BusTex 2341/890 fabricl 85% wool and 15% nylon fabric, glued to a removable insert, to make up a vandal resistant assembly.

Interior color scheme shall be practical and coordinating with the exterior paint scheme. MDT will make final selection of seat and fabric colors prior to production.

23.7 Technical Data

The contractor shall submit Certified Test Reports as evidence of compliance with the specifications and test requirements contained herein. The data shall substantiate the performance, reliability, and compliance with the safety performance established by the Transportation industry as a required level of excellence in seating. The test reports shall contain a record of the Static Load Tests, the Performance Tests, and Dynamic Tests. The reports must show test diagrams, photos of the tests, and load results on representative seats completely assembled and fastened to a fixture simulating the vehicle attachment. The test data for each test shall describe the test procedure and test equipment, the resultant deflection, the permanent deformation, and statement of inspection and compliance with

specification requirements. The analysis shall indicate values relating to energy absorption and moderation of the magnitude of energy to the passengers. The analysis shall also substantiate the seat structure crash-worthiness relating to deformation characteristics and the strength required to prevent disintegration.

23.8 Testing and Strength Requirements

All testing shall be conducted on a representative transverse seat using a simulated bus floor, cantilever mounting device, and pedestal mounting device to correlate the results with conditions expected in normal usage of the seat.

23.8.1 Static Load Tests

a) Seat

The seat assembly shall withstand static vertical forces of 500 pounds applied to the top of the seat cushion in each seating position with less than 1/4-inch permanent deformation in the seat or its mountings.

b) Seat Back

The seat assembly shall withstand static horizontal forces of 500 pounds, forward and rearward, evenly distributed along the top of the seat back with less than 1/4-inch permanent deformation in the seat or its mountings.

c) Handhold and Armrest

Seat back handhold and armrests shall withstand static horizontal (forward and rearward) and vertical (downward) forces of 250 pounds applied anywhere along their length with less than 1/4-inch permanent deformation.

23.8.2 Performance Tests

a) Drop Impact Test

Seats at both the aisle and window seating positions shall withstand 4,000 vertical drops of a 40-pound sandbag without visible deterioration. The sandbag shall be dropped 1,000 times each from heights of 6, 8, 10, and 12 inches.

b) Swinging Impact Test

The seat backs at the aisle position and at the window position shall withstand repeated impacts of two 40-pound sandbags without visible deterioration. One sandbag shall strike the front 40,000 times and the other sandbag shall strike the rear 40,000 times. Each sandbag shall be suspended on a 36-inch pendulum and shall strike the seat back 10,000 times each from distances of 6, 8, 10, and 12 inches.

c) Squirming Impact Test

Seat cushions shall withstand 100,000 randomly positioned 3-1/2-inch drops of a squirming, 150-pound, smooth-surfaced, buttocks-shape striker with only minimal wear on the seat covering and no failures to seat structure or cushion suspension components.

d) Handhold and Armrest Impact Test

Seat back handhold and armrests shall withstand 25,000 impacts in each direction of a horizontal force of 125 pounds with less than 1/4-inch permanent deformation and without visible deterioration.

23.8.3 Dynamic Tests

a) Knee Injury Protection

All transverse objects, including seat backs, modesty panels, and longitudinal seats in front of forward facing seats, shall not impart a compressive load in excess of 1,000 pounds onto the femur of passengers ranging in size from a 5th-percentile female of a 95th-percentile male during a 10g deceleration of the bus. This deceleration shall peak at .05 ±.015 seconds from initiation.

b) Occupant and Frontal Crash Protection

Permanent deformation of the seat resulting from two 95th-percentile males striking the seat back during this 10g deceleration shall not exceed 2 inches, measured at the aisle side of the seat frame at height H. Seat back should not deflect more than 14 inches, measured at the top of the seat back, in a controlled manner to minimize passenger injury. Structural failure of any part of the seat or sidewall shall not introduce a laceration hazard.

c) Head Injury Protection

The upper rear portion of the seat back and the seat back handhold immediately forward of transverse seats shall be constructed of energy absorbing materials. During a 10g deceleration of the bus, the HIC number (as defined by SAE Standard J211a) shall not exceed 400 for passengers ranging in size from a 6 year old child through a 95th percentile male.

Specification for High Impact Thermoplastic

Physical Property	Specification	Test Method
Tensile Yield Strength	4400 – 6000 PSI	ASTM D-638
Flexural Modulus	220,000 – 333,000 PSI	ASTM D-790
Flexural Yield Strength	6200 – 97000 PSI	ASTM D-790
Izod Impact Resistance	3 – 8 ft/lb/ 1/8Notch	ASTM D-256

Specific Gravity	1.04 – 1.40	ASTM D-792
Hardness (Rockwell)	R 81 – 105	ASTM D-785

10) Section 24.0 Body - Driver's Seat: Operator's Seat is hereby deleted in its entirety and replaced by the following:

Section 24.0 Body - Driver's Seat (Revised):

24.1 The driver seat shall be USSC 9100 ALX3 Operator's seat with pneumatic suspension. This is a high back model and shall have no armrest. Installation of the seat shall not interfere with any of the adjustment features of the seat. The driver's seat shall be upholstered with Holdsworth black transit fabric and black vinyl on boxing and nosings. The driver's seat must come equipped with the longest retractable safety belt offered by the manufacturer. The driver's seat shall have a seat belt, meeting requirements of Federal Motor Vehicle Safety Standard No. 207 and No.210. The seat belt shall have an automatic ratcheting retractor on the left-hand side, and the mating part on the right-hand side shall be as short as possible. Seat belt shall be black. The seat suspension shall lift and support 500 pounds.

24.2 The seat frame shall be of satin finish stainless steel, box type, and tubular construction, reinforced where necessary to prevent failure due to vibration and shall be readily removable from the base.

24.3 The total travel measured for the operator's seat, from fully retracted to fully extended position in its guideway, shall be a minimum of 11 inches.

24.4 With the seat fully lowered and in fully forward position, the horizontal distance measured between the edge of the seat cushion and the fixed steering column housing shall be a minimum of six (6) inches.

24.5 The operator's seat shall be equipped with an alarm system that will warn the operator when the parking brake is not applied and the driver seat is unoccupied. The alarm shall be functional regardless of run switch position and whether the engine is running or not running. A sensor in the driver's seat cushion shall detect when the seat is unoccupied using a method other than weight. When activated, the alarm system, after a 2 second delay, shall continuously sound the bus horn, flash the headlights, and illuminate a dashboard warning light until the parking brake is applied or the operator's seat is reoccupied. The Operator's Seat/Park Brake Alarm shall be an I/O Controls system.

11) Section 25.0 Body - Floor Covering is hereby deleted in its entirety and is replaced by the following:

Section 25.0 Body - Floor Covering (Revised):

25.1 Floor Covering

25.1.1 The floor covering shall have a non-skid walking surface that remains effective in all weather conditions and complies with all ADA requirements Part 38, Subpart B, Sec. 38.25 Doors, steps and thresholds-

(a) Slip resistance: All aisles, steps, floor areas where people walk and floors in securement locations shall have slip-resistant surfaces.

(b) Contrast. All step edges, thresholds and the boarding edge of ramps or lift platforms shall have a band of color(s) running the full width of the step or edge which contrasts from the step tread and riser, or lift or ramp surface, either light-on-dark or dark-on-light.

25.1.2 The floor covering shall consist of a long-life rubber composition material, as manufactured by the RCA Rubber Company. A welded seam floor covering may be considered for approval. Floor material shall be marbleized blue in color (RCA Transit floor TR852L) except step nosings, step treads, standee line and other areas requiring contrasting markings as noted. Color/pattern shall be consistent throughout the floor covering. The floor covering material shall be free of bubbles, scratches, gouge marks, and discoloration. The floor covering sections shall be as large as possible. No patches or strips narrower than 2" shall be used. The floor covering, as well as transitions of flooring material to the main floor and to the entrance area, shall be smooth and present no tripping hazards.

25.1.3 All floor covering edges except level butted edges shall be protected by stainless steel or clear anodized aluminum trim.

25.2 Aisle

A one-piece center aisle strip shall extend the length of the aisle from the standee line between the aisle sides of transverse seats to the vertical wall of the rear settee. If the floor is of a bi-level construction, then center strip shall be one-piece at each level. The aisle strip shall be more than 23 inches wide, 3/16 inches thick, and have longitudinal ribs on the top surface. The aisle strip material shall be cut to provide a 3/16 inch rib along the outer edges. The covering between the center aisle strip and the wheel housings may be separate pieces. A piece of same material shall be laid between the aisle strip and the wheelhousings, with rib parallel to the ribs in the aisle strip. A piece of 1/8 inch thick smooth floor covering may be laid between the aisle strip and wheelhousings if the aisle strip is in close proximity to the wheelhousings.

25.3 Seating Areas

Between the center aisle strip and the sidewalls of the body, except in wheelchair securement areas, the floor covering shall be 1/8 inch thick and have a smooth top surface.

25.4 Wheelchair Areas

In the wheelchair securement areas 3/16 inch thick ribbed floor covering shall be used. The rib orientation shall be longitudinal. Ribs ends shall be beveled where they abut 1/8 inch smooth floor covering.

25.5 Interior Step

The center aisle interior step landing between the lower and upper floors shall be a ribbed, entirely yellow, one-piece tread with integral nosing. The step nosing of the upper floor shall be yellow, approximately three inches deep, and the full width of the top step tread. The upper floor step nosing shall be integrally molded with the aisle floor covering or shall be installed to precisely match the ribs and surface height of the upper floor center aisle floor covering so as to preclude a tripping hazard.

25.6 Standee Line

A yellow ribbed standee line shall extend across the bus aisle immediately aft of the vestibule area. The standee line shall be at least 2 inches wide and shall extend between the driver's barrier and the front curbside wheelhouse or front door modesty panel.

25.7 Vestibule Area

The floor covering in the vestibule or entrance area near the farebox shall be 5/16 inch thick ribbed top, composition covering. The floor covering in the vestibule area shall have longitudinal ribs. The vertical face and top section of the entrance step edge backing shall be anchored with AISI Type 304 stainless steel screws. This covering shall be an integral piece without a joint. The outboard edge of the entrance door area floor covering shall have an integral yellow step nosing with a Hypalon rubber composition material, approximately three inches deep and the full width of the entrance door step tread. The nosing shall be molded integral with the tread. The 5/16 inch vestibule covering where it joins the 3/16 inch aisle strip, shall be beveled not less than two (2) inches to minimize the effect of the difference in thickness.

25.8 Operator's Platform

The floor in the operator's compartment shall be easily cleaned and shall be arranged to minimize debris accumulation. Floor covering in the operator's platform area shall be 1/8 inch thick with smooth top surface. If black colored floor covering is offered for superior color coordination in this area, it shall require MDT approval. A 2 inch ribbed yellow step nosing shall extend along the entire edge of the operator's platform.

25.9 Vertical Surfaces

Vertical surfaces that receive floor covering, such as the rear settee riser, shall receive 1/8 inch smooth covering.

25.10 Floor Covering Installation

All holes in the floor, for mounting bolts, seams, etc. are to be filled and caulked before sanding. Just prior to the application of the floor covering, the entire floor shall be thoroughly sanded to a flat even surface and then completely cleaned of all sanding dust and foreign material. The floor covering shall be butt jointed and securely cemented to the plywood floor with Armstrong No. D-220 Collodin adhesive 8/1465-211 or equal floor cement, by either the roller or spray method of application, laid and rolled to comply with the floor covering and adhesive manufacturer's recommendations. The gap in the butt joints shall not exceed 1/16 inch. Joints shall be sealed with color-matched sealant to prevent water from penetrating joints.

After setting period, the floor shall be closely inspected for bubbles, separations, or other irregularities, and remedial action taken.

12) Section 26.0 Body – Windows: Following are the changes to this Section:

Sections 26.1.2 (Driver Side Windows) is hereby deleted in its entirety and replaced by the following:

Section 26.1.2 Driver Side Window (Revised)

The driver window shall be glazed with HEAT GUARD product as manufactured by Ricon Corporation located in Panorama City, CA. The driver's glazing shall be ¼" thick laminated safety glazing conforming to FMVSS 205 and applicable requirements of ANSI Z26.1-1997. The total visible light transmittance must no be below 76 percent as measured by ASTM E-424. The LSG (light to solar gain ratio) must be a minimum of 1.28. The relative heat gain must meet a minimum requirement of 150 BTU/hr/sq.ft.

Driver's window shall be top fixed bottom ¾-slider. Rear slider can either be fixed or sliding.The driver's window shall open sufficiently allowing the seated driver to adjust the side view mirror and shall not obstruct the view of the driver when in the fully open or closed position. The windows must meet FMVSS 205 and all windows shall meet the minimum 217 requirements. The driver's window shall be quick change design manufactured by Ricon Corporation located in Panorama City, CA

The driver's glazing shall be ¼" thick laminated safety glazing and passenger window glazing must be ¼"thick tempered safety glass, both conforming to FMVSS 205 and applicable requirements of ANSI Z26.1-1997.

Section 26.1.3 (Dimensions) is hereby deleted in its entirety and replaced by the following:

Section 26.1.3 Passenger Windows:

All passenger windows shall be full fixed egress window assemblies with the exception of the destination window assemblies. The passenger window glazing

shall be 6mm tempered glass with the maximum tint allowable to reduce solar transmittance. The windows shall be the "Ricon CityView™" series, seamless in style giving the entire bus a "frameless" single body glazing appearance. All aluminum and steel material will be black powder coated to help prevent corrosion. All passenger windows shall be quick change design manufactured by Ricon Corporation located in Panorama City, CA. Window glazing is designed where it can be replaced in under 5 minutes by a trained technician. Glazing in the window assembly shall be replaced without removing the window from its installed position on the bus or manipulation of the rubber molding surrounding the glazing. The glazing shall be held in place mechanically by a formed metal extruded ring constructed to last the life of the vehicle. The metal extruded ring shall act as part of the structure of the window and shall retain a sacrificial polycarbonate liner. The metal extruded ring shall hold in place the 1/16-inch or 1/8-inch sacrificial liner. The sacrificial liner shall mount flush or stand off the exterior glazing to prevent moisture and dust from gathering between the exterior glazing and sacrificial liner. The metal extruded ring shall conceal the edges of the sacrificial liner from the passenger. The mechanic or service worker using simple hand tools should be able to replace the sacrificial liner in 30 seconds or less. Pulling the sacrificial liner upward, then pulling the sacrificial liner from the bottom, releases the sacrificial liner from the metal extruded ring. This acrylic sacrificial liner must be replaced without removing the window from its installed position on the bus, without removing the tempered glazing from the sash, and without the removal or manipulation of the window assembly's rubber molding. No additional parts except the sacrificial liner itself are to be used in the system. The exterior glazing shall be mounted securely in the existing window extrusion with or without the sacrificial liner installed in the window assembly. The removal of the sacrificial liner shall not prevent the vehicle from going back into service. Removal and replacement of the sacrificial liner shall not require the removal or the modification of any other parts or fasteners. All windows must meet FMVSS 205 and all windows shall meet the minimum 217 requirements. The destination window assembly shall be split fix with the transom glazing clear. All emergency handles shall be located on the right side of the window assemblies. Emergency exit and window release lever operation instructions must be metal and bolted to window frame rail adjacent to each seat. Emergency instructions must be printed in English, Spanish and Creole.

13) Section 28.0 Ancillary Features: Following are changes to this Section:

Section 28.1.4 Driver's Area-Operator Barrier is hereby added.

Section 28.1.4 Driver's Area-Operator Barrier :
An operator's area barrier shall be provided for the driver's security and personal protection. The barrier shall enclose the driver and prevent passengers from reaching the driver or the driver's personal effects.

A rear barrier between the driver and the left front passenger seat shall extend from the floor level to the ceiling. A side barrier shall be located on the right side of the driver's area extending from the rear barrier forward. A door shall allow for easy access into and out of the driver's area. The exterior skin of the rear barrier, side barrier, and door shall be constructed of stainless steel with a slight corrugated texture or other architecturally pleasing finish approved by MDT. The operator's barrier shall be constructed so as to prevent unauthorized entry or intrusion into the driver's area, yet allow the driver to converse with passengers. All passenger seat positions shall be visible to the driver either directly or by mirror. The barrier shall not hinder the driver's performance in any manner. It shall not be a source of any rattling or noise. The enclosure door shall be secured from the inside and the latch to open the door shall be flush mounted so that clothing or other articles can not be caught on it. A handle shall be provided on the inside of the door to assist the driver in opening and closing the door. The door shall be equipped with a spring or other device to automatically return the door to the closed position. The upper portion of the enclosure door shall be a fixed ½" polycarbonate window which will not interfere with the driver's view through the front windshield or the rear view mirrors. The window shall not reflect glare at the driver or cast glare onto the windshield. The window shall be covered on both sides with a removable clear scratch guard, Lexan Nu-View or approved equal. Driver's area trim shall be satin black. The barrier shall eliminate glare from interior lighting during night operation. A driver's personal effects box approximately 20" W x 15" H x 10" D shall be incorporated into the operator's barrier. The Contractor shall submit concept drawings, for evaluation of the proposed barrier, at the at the pre-production/design review meeting. Prior to production of the pilot bus, a full scale mockup of the driver's compartment area shall be constructed for MDT approval of the operator's barrier design.

Section 28.2.1 Outside Mirrors is hereby deleted in its entirely and replaced by the following:

Section 28.2.1 Outside Mirrors (Revised):

The bus shall be equipped with 2 exterior mirrors of unit magnification (flat), each with not less than 100 sq. in. of reflective surface. The roadside rearview mirror shall be mounted lower on the bus body so that the operator's line of sight is not obstructed. The roadside mirror shall be adjustable by the seated driver. The curbside rearview mirror shall be electrically remote controller. No part of the curbside mirror shall be within 80 inches from the ground. All exterior mirrors shall have spring loaded arms to permit mirror to be moved out of the way to preclude damage by automatic bus washing equipment. All mirrors and brackets shall be manufactured by B & R. All mirror locations must be approved by MDT prior to production.

14) Section 29.1.1.1 Body – Exterior Route Displays (Front Destination Sign) is hereby deleted its entirely and replaced by the following:

Section 29.1.1.1 Front Destination Sign (Revised)

Front destination sign shall be Twin Vision amber LED sign. The sign shall have 16 rows by 160 columns, with a minimum display area of 63"x 8.0".

15) Section 30.0 Body – Fare Collection is hereby deleted in its entirety and replaced by the following:

Section 30.0 Fare Collection (Revised)

30.1 Fare Box

The farebox will be provided and installed by MDT. The Contractor will provide space, wiring and power in the buses.

30.2 Fare Box Location

The Contractor shall provide unencumbered space to accommodate, the Cubic Western GFI Odyssey farebox. This space shall be as forward as practicable so that the installed device shall not restrict traffic in the passenger area especially wheelchairs or mobility aids and shall allow the driver to easily view the coin and bill drop window and viewing ramp. This space shall not restrict access to the driver's area and/or operation of driver controls. It shall permit easy removal of the cash box from the farebox. The MDT will provide a farebox base for the mounting of the farebox. The Contractor shall mount farebox base securely. The specific location of the farebox mounting shall require the approval of MDT.

30.3 Farebox Wiring and Power

MDT will provide a farebox floor mounting plate with terminal strip. Contractor shall provide a 12 volt-DC constant power supply with circuit breaker protection (amps will be determined in the preparation meeting) and wiring to accommodate the alarm function of the farebox. Power shall be available with the master run switch in any position including off.

16) Section 34.0 Propulsion System – Power Plant Mounting and Accessories: Following are the changes to this Section:

Section 34.3 Hydraulic Drive: Following is hereby added to this section:

Liquid Tape shall be applied to all switches exposed to water located at various sections of the bus.

Following paragraph is hereby added as Section 34.5 Protective Sleeves.

Section 34.5 Protective Sleeves:

Protective sleeves (high temperature resistant material) shall be provided to all fire suppression system hoses, high pressure hydraulic lines for hydraulic pump, fan motor and power steering.

17) Section 35.0 Propulsion System – Power Plant: Following are the changes to this Section:

Section 35.1: The Contractor shall provide Cummins ISB engine with EPA 07-09 emissions.

Section 35.2: Second line of this paragraph is deleted and replaced by: Fuel filters shall be Fuel Pro Fuel Filter.

Sections 35.6: The drain plug to be used is the Femco speed click engine drain plug.

Following is added as Section 35.16 Fluid Sampling Ports.

Section 35.16 Fluid Sampling Ports:
Engine probalyzer port shall not be used. Fluid sampling ports (KP Series Pushbutton Sampling Valve) for engine, transmission, and hydraulic systems shall be provided.

18) Section 41.0 Propulsion System Final-Drive: Following is added to Section 41.1 General Requirements:
The Contractor will add a remote differential breather for the drive axle located at least 30 inches above ground level.

19) Section 45.1.5 Brakes – Service Brakes (Air System): Following are changes to this Section:

The quick disconnect H2C1/4" is hereby deleted and replaced with ball valve. Aeroequip FD 41-1000-06-04 female quick disconnect couplings with Retained caps are added.

20) Section 46.0 Wheels and Tires: Following are the changes to this Section:

Section 46.1 Wheels is changed as follows:
The Contractor shall provide one spare wheel per bus in accordance with the Broward County Contract. This does not constitute any change.

The Veeder Root hub odometer is hereby deleted.

Section 46.2 (Tires) is hereby deleted in its entirety and replaced by the following:

Section 46.2 Tires (Revised):

Tires shall be suitable for the conditions of transit service and sustained operation at the maximum speed capability of the bus. The tire size shall be compatible with the wheels, and of a load range adequate for the gross vehicle weight rating of the bus. Load on any tire at GVWR shall not exceed tire supplier's rating. The tires shall be interchangeable on the bus. All valve stems shall be readily accessible on the side of the bus for servicing and maintenance.

All tires will be provided under a lease agreement between MDT and the tire supplier at no cost to the Contractor. The supplied tires will be 305/70R22.5 on all positions.

21) Section 47.2 Fuel System (Fuel Filler): The following paragraph is added to this Section:

The Contractor shall provide an E. J. Ward automatic fuel system Vehicle Information Transmitter and antennae (VIT-DCM). Provide a dash mounted odometer display that receives its data from the E. J. Ward system. Contact Mr. Lee Christenson at (210) - 824-7383 for information concerning the system. The Electronic Odometer display may be mounted on a bracket on the dashboard with the radio TCH and Globe transfer cutter. The antenna shall be mounted at the front curbside corner below and behind the front bumper. A 12 volt DC power shall be provide to operate the E.J. Ward system.

22) Section 49.1 Electrical System (General Requirements): Following are changes to this Section:

The main power supply and ground cables size 4/0 gauge are hereby deleted. The Contractor shall supply the following to the County:

All Battery cables including the battery cables in the engine compartment shall be 4/0 gauge marine grade, Type 3 tinned copper conductor (extra flexible stranding), with insulation resistant to oil, heat, moisture, abrasion, UV and ozone, and idiot proof lengths.

23) Section 50.2 Batteries is hereby deleted in its entirety and replaced by the following:

Section 50.2 Batteries (Revised)

The Contractor shall provide Group-31 Deka maintenance-free batteries.

The battery terminal ends and cables shall be color-coded with red for the primary positive, black for negative, and another color for any intermediate voltage cables. Battery cables shall be flexible and sufficiently long to reach the batteries with tray in the extended position without stretching or pulling on any connection and shall not lie directly on top of the batteries. Except as interrupted by the master battery switch, battery and starter wiring shall be continuous cables with connections secured by bolted terminals; and shall conform to specification requirements of SAE Standard J1127–Type SGT or SGX and SAE Recommended Practice J541.

A terminal block in the battery compartment for powering systems, such as the DC-DC converter that require constant power when battery cutoff switch is off, shall be provided.

The battery compartment shall be well vented, self-draining, and located towards the rear of the bus close to the engine. It shall be accessible only from the outside of the bus. All components within the battery compartment, and the compartment itself, shall be protected from damage or corrosion from the electrolyte. The battery tray shall be stainless steel. A locking device shall retain the battery tray in the stowed position. The inside surface of the battery compartment's access door shall be electrically insulated, as required, to prevent the battery terminals shorting on the door if the door is damaged in an accident or if a battery comes loose.

A permanent vinyl schematic on battery door illustrating configuration shall be provided

24) Section 54.0 A Computer Aided Dispatch/Automotive Vehicle Location (CAD/AVL) Data and Voice Communication System, and An Automatic Passenger Counting System: Following are the changes to this Section

Section 54.1 Automatic Passenger Counting is hereby deleted in its entirety and replaced by the following:

Section 54.1 Automatic Passenger Counting (Revised)

The County will provide UTA `APC hardware. The Contractor shall install the APC system during production. Installation details will be provided by the County upon request. All equipment location, accessibility, and mounting, must be approved by MDT prior to production.

Following is added as Section 54.6 Radio System

54.6.1 Radio Package
The County will provide Ericsson radio package #350A1977, consisting of components for radio, VLU, TCH, handset, cab speaker, terminal blocks, filters, and specialized cables (Same as Lot 8). The Contractor will provide antennas and antenna cables, relays and wiring for the DR600 interface, and all wiring, connectors, brackets, and incidental hardware to install the complete system. The Contractor will install the complete radio system during production (Same as Lot 8). Installation details will be provided by the County upon request. All radio equipment location, accessibility, mounting, and cable lengths, for items such as but not limited to TCH, Handset Assembly, and Cab speaker must be approved by the County prior to production. Regulated 13.6 volts DC power shall be provided for the radio system by the output of the dedicated electronics systems power supply.

54.6.2 Conduit
The Contractor shall provide and install a 2-1/2 inch ID conduit or an equivalent inner wall channel space from the radio box to the radio control head mounting location. Conduit or channel design shall facilitate installation of the radio control

cable by the "pull through" method in both initial and future installations to facilitate repair and replacement. Conduit shall be rust and water proof.

54.6.3 Transit Control Head
The Transit Control Head (TCH) has the following dimensions:

Height - 4 inches
Length - 10 inches
Width - 2.5 inches

The TCH has to be mounted in such a way that the driver will have a full view of the TCH display and the mounting of this unit will not impede the view of the road. The proposed mounting location is to be reviewed and approved by MDT prior to production.

54.6.4 Handset and Cab Speaker
The Handset must be mounted at waist level (driver seated) requiring minimal body movement, located in front of the driver, and requiring minimal eye movement when locating the handset.

The Cab speaker must be mounted so the driver can hear an announcement when the volume has been lowered.

The County will provide all Inter-Connect drawings. Mounting locations must be approved by the County prior to production.

54.6.5 Antennas
The Contractor shall supply and mount a low profile 800 MHz antenna (Antenna Specialist ASP-930T) with RG58 coax cable and TNC connector to the radio.

The Contractor shall supply and mount a GPS antenna w/gasket (Trimble 502 Model 18334) with RG58 coax cable and F Type male connector to the VLU.

The Contractor shall mount the GPS antenna (P/N 801-3200-000) and cable supplied with the Stop Announcement System.

All antenna cables must be run in 1 inch diameter conduit to the radio box. Removable access covers shall be provided in the ceiling of the bus in order to allow access to the antenna and conduit. Three antennas shall be installed on every bus. Antenna locations shall be as close as possible to the center line of the bus and have a separation of approximately 3 feet. All mounting locations must be approved by the County prior to bus manufacture.

54.6.6 Emergency Transmit Switch
Contractor shall provide and install a Silent Alarm switch. The switch shall activate the Silent Alarm function of the radio system and destination sign. The switch shall be a red push button double pole switch with guard ring, manufactured by OTTO Engineering, part P/N P4-624122. The push button must be red and have a protective collar to prevent accidental activation. The installation and location of the switch must be approved by the County prior to production.

An emergency anti-highjack function shall be provided which will activate the throttle interlock and the transmission auto neutral features when inputs are provided by the radio system. (The transmission "auto neutral" feature is activated when the transmission "auto neutral" input wire is grounded.) The radio VLU will utilize two of its normally open dry contacts to provide ground inputs to the I/O Controls programmable logic system. One contact will provide the signal to activate the anti-highjack function to disable the bus. The bus will remain disabled until the other contact provides a signal to de-activate the anti-highjack function.

The Contractor shall install the radio system.

Following is added as Section 54.7 DRI ITS Architecture Software Upgrade:

DRI ITS Architecture Software upgrade package Part# 798-0082-000 is hereby added for total integration of APC, Farebox, and signs.

25) Section 55.0 Digital Video Camera System is hereby deleted in its entirety and replaced by the following

Section 55.0 Digital Video Camera System (Revised)

(A) The CCTV Surveillance system shall be March Network with 5412 Mobile Digital Video Recorder, 12 cameras (color, infrared, and B/W), 30 days on-board video storage, and be capable of recording at up to 240 frames per second for all connected cameras or approved equal.

(B) Regulated 13.6 volts DC power shall be provided for the DVR system by the output of the dedicated electronics systems power supply. Tamperproof Torx screws shall be provided for all camera housings and access covers.

(C) Loom for the facing forward camera wires located below the destination sign compartment near the top of the windshield shall be provided.

(D) An impact sensor shall be provided. A system status indication shall be provided on the dashboard through the I/O Controls multiplex (or approved equal) warning indicator LED display.

(E) The bus shall be equipped with 10 CCTV Kalatel cameras as follows:

1. A low LUX camera mounted below the destination sign compartment near the top of the windshield, forward facing. The camera shall be a color camera with the capability to capture images in ambient lighting at night. If necessary, the camera may switch to black and white under very low lighting conditions. The field of view shall include the street in front of the bus, overhead traffic signal while stopped at an intersection and pedestrians on the sidewalk or at the curb approximately 8 feet in front of the bus. (4.0mm if practicable) The mounting shall be such as to prevent camera vibration, water intrusion, interference with the driver's visibility, and shall minimize

color shift due to the tinting at the top of the windshield. A flexible rubber glare shield (hood) shall be provided on the camera. The housing window shall be glass or a material resistant to scratching, hazing, and cleaning chemicals. (Plastic dome housing is not acceptable.)

2. A color camera with infrared capability flush mounted in the panel above the driver facing the farebox and entry door. The camera shall be housed in an "angled down" box. The housing window shall be glass or a material resistant to scratching, hazing, and cleaning chemicals. The field of view shall wide angle (2.9mm if practicable) and include the driver, the farebox, and the entire entry door opening. The vestibule area shall be illuminated by an infrared emitter under low light conditions.

3. A color camera flush mounted in the panel above the front door facing the driver and farebox. The camera shall be housed in an "angled down" box. The housing window shall be glass or a material resistant to scratching, hazing, and cleaning chemicals. The field of view shall wide angle (2.9mm if practicable) and include the driver, driver compartment, and the farebox.

4. A color camera shall be flush mounted in the front destination sign compartment door facing rearward. The camera shall be housed in a shallow, waterproof box that will not interfere with the destination sign. The housing window shall be glass or a material resistant to scratching, hazing, and cleaning chemicals. The field of view shall include the entire length of the front bus body section interior and the articulated joint area (6.0mm if practicable).

5. A color camera shall be surface mounted on the centerline of the bus ceiling at the center of the bus. The camera shall be front facing. The housing window shall be glass or a material resistant to scratching, hazing, and cleaning chemicals. The field of view shall include the entire length of the front bus body section interior (4.0mm if practicable).

6. A color camera shall be surface mounted on the centerline of the bus ceiling at the center of the bus. The camera shall be rear facing. The housing window shall be glass or a material resistant to scratching, hazing, and cleaning chemicals. The field of view shall include the entire length of the front bus body section interior (4.0mm if practicable).

7. A color camera shall be surface mounted on the bus ceiling facing the rear door. The housing window shall be glass or a material resistant to scratching, hazing, and cleaning chemicals. The field of view shall wide angle (2.9mm if practicable) and include the entire rear door opening.

8. A color camera shall be surface mounted on the bus exterior over the

driver's window near the roofline. The camera shall be facing rearward. The housing shall be waterproof and sealed from the exterior environment to prevent formation of condensation on the housing interior. The housing must be rugged to resist damage from tree limbs. The housing window shall be glass or a material resistant to scratching, hazing, and cleaning chemicals. The field of view shall include the entire length of the bus exterior and the traffic lane adjacent to the bus travel lane (6.0mm if practicable).

9. A color camera shall be surface mounted on the bus exterior over the front passenger door near the roofline. The camera shall be facing rearward. The housing shall be waterproof and sealed from the exterior environment to prevent formation of condensation on the housing interior. The housing must be rugged to resist damage from tree limbs. The housing window shall be glass or a material resistant to scratching, hazing, and cleaning chemicals. The field of view shall include the entire length of the bus exterior and the traffic lane adjacent to the bus travel lane (6.0mm if practicable).

10. A color camera shall be surface mounted on the bus exterior at the rear above the engine compartment. The camera shall be facing rearward. The housing shall be waterproof and sealed from the exterior environment to prevent formation of condensation on the housing interior. The housing window shall be glass or a material resistant to scratching, hazing, and cleaning chemicals. The field of view shall include the rear bumper and the ground behind the bus (2.9mm if practicable).

Cameras shall have sufficiently high resolution to allow recognition of faces and to read roadside signs.

A complete description of the CCTV Surveillance system, including installation, shall be presented to the County for approval prior to production of the pilot bus or first production bus.

26) Section 57.5 (Communications Equipment Box Lock Key): Following is added to this Section:

A lockable communications equipment box access door with a Chicago LOCK 1454 key shall be provided

27) Sections 59.0 New Fleet Inspection and 60.0 Acceptance of Test are hereby deleted in their entirety and replaced by the following:

QUALITY ASSURANCE

Quality Assurance Program
The Contractor, the Contractor's manufacturing plant and organization shall be certified to:

The appropriate ISO 9001:2000 standard (as revised).The Contractor's ISO 9000 certification shall be maintained active and current throughout the life of the Project.

A Quality Assurance Program shall be implemented by the Contractor to ensure delivery of final product including systems, subsystems, and components that satisfy the quality requirements of the Contract. Consequently, the Contractor shall utilize quality processes that satisfy the requirements of the Contract.

The Contractor shall utilize an MDT-approved quality assurance program to oversee the Work of the Contract and to ensure that the product and manufacturing process meet all the requirements of the Contract Documents. This program shall be maintained through the duration of the Contract and all warranty periods.

The quality assurance activities and responsibilities required by this specification include establishing and maintaining a quality assurance program, satisfying all requirements identified in the program, and conducting timely quality assurance audits of the program.

The provisions of the Contractor's quality assurance program, documented in the Contractor's Quality Assurance Plan, shall be imposed on the Contractor's entire organization and on all Subcontractors and Suppliers. The Contractor shall assure conformance with the quality assurance requirements of all such entities. The Contractor shall make available for MDT review and inspection all required procedures, plans, manuals, and any other documentation to be used to ensure conformance.

Quality Assurance Plan

The Contractor shall submit a Quality Assurance Plan (QAP), unique for this contract, and a copy of their ISO 9001:2000 certificate. The Contractor shall submit a revised QAP, with the associated Quality Procedures within forty five (45) days after Notice-to-Proceed as required for MDT review and approval.

MDT may use the Contractor's Quality Assurance Plan as a basis for planning the auditing and witnessing of production procedures and inspections, as well as any testing or other activities for which MDT determines monitoring is warranted.

Quality Assurance Plan Requirements

The Quality Assurance Plan (QAP) shall describe how the Contractor intends to apply its Quality Assurance Program and include the specific quality practices and activities relevant to the product (bus) as defined within the Contract Documents.

The QAP shall identify the person responsible for all activities affecting the planning and execution of the Work. The QAP shall identify the methods to verify the coordination of all relevant activities, including, but not limited to, design, manufacturing, testing, inspection, safety, reliability, and maintainability.

The QAP shall include all forms that the Contractor shall use to ensure that materials, processes, personnel, and product comply with the requirements of the Contract Documents.

The Contractor shall impose its own MDT-approved quality plan requirements on all Subcontractors and Suppliers for this Project. The Contractor shall audit all Subcontractors and Suppliers to ensure that they adhere to all elements of the Contractor's quality assurance plan. The QAP shall list the Contractor's procedures that describe the methods for planning, implementing, and maintaining quality.

The Contractor's QAP shall, at a minimum, adhere to and contain the following key elements:

(1) Management responsibility.
(2) Documented quality system.
(3) Design control.
(4) Document control.
(5) Purchasing.
(6) Product identification and traceability.
(7) Process control.
(8) Inspection and testing.
(9) Inspection, measuring, and test equipment.
(10) Inspection and test status.
(11) Nonconformance.
(12) Corrective action.
(13) Quality records.
(14) Quality audits.
(15) Training.

For all microprocessors the Contractor and all Subcontractors shall provide a software quality assurance manual or shall include within the quality assurance manual a section defining the software documentation requirements. This section shall also be in accordance with IEEE 730 standard (as revised).

Management Responsibility (Element 1)

The Contractor shall clearly establish and implement a quality management structure for the Contract. All personnel related to the quality elements of the Contract shall be identified in an organization chart and their responsibilities clearly documented. Responsibility for quality shall rest with the highest level within the organization and shall be independent from other functional areas.

A quality policy shall be established and implementation of the policy shall be the responsibility of the designated Quality Assurance Representative (QAR) with whom MDT may address matters pertaining to quality. The Quality Assurance Representative (QAR) shall be given sufficient authority to ensure that the quality is consistently maintained. The Contractor shall provide the resume of the Quality Assurance Representative (QAR) to MDC for review and approval as part of the Quality Assurance Plan (QAP). The Quality Assurance Representative (QAR) shall not be replaced by the Contractor without prior approval of MDT.

Documented Quality System (Element 2)

The Contractor shall establish and implement a quality management system directly applicable to the Contract. The system shall clearly identify quality objectives for the Contractor and these objectives shall extend to all Sub-Contractors and Suppliers, as applicable.

Documented quality procedures and instructions shall be developed for all phases of the work, including design, manufacturing, testing, and warranty. The procedures shall be readily available to all Contractor personnel and shall be maintained in a current state.

Design Control (Element 3)

The Contractor shall establish and implement measures to ensure that engineering procedures are well defined and designs are controlled, prepared, verified, issued, and revised in accordance with the requirements of the approved quality system. Applicable regulatory requirements, industry codes and standards, and acceptance criteria shall be identified, used, and documented.
Original designs and changes to approved designs shall be subject to change control measures, and both shall be approved by MDT.

The Contractor shall establish and maintain procedures to control and verify the design of the transit systems in order to ensure that the design criteria and other specified requirements are met. Design control includes ensuring that the design requirements are understood, planned, communicated (e.g. design interface), that all design input and output are identified, reviewed, verified, and validated, and that all design changes are reviewed and approved by MDT. Records of the results of all the design activities as mentioned in this section shall be maintained.

Two distinct types of design reviews shall be conducted to evaluate the progress and technical adequacy of the design and compliance with the performance requirements of the Contract Documents. These are the Preliminary Design Review (PDR), and the Final Design Review (FDR).

The Contractor shall submit a proposed meeting agenda and a schedule on both PDR's and FDR's activities to MDT for review and approval.

The Contractor shall prepare a plan for design activities. The plan shall identify who has responsibility for the different design parts, and who has the QA responsibility for design. It shall also identify the various organizational interfaces required between various groups producing and commenting on the design, and specify the information to be documented, transmitted, and regularly reviewed.

Design input requirements shall be identified, documented, and reviewed at every design review stage. Design output shall be documented. It shall meet the input design requirements, include acceptance criteria, conform to appropriate regulatory requirements whether or not these have been stated in the design input requirements, and identify those aspects of the design which are crucial to the safe and proper functioning of the final product or system.

The contractor shall assign competent personnel those activities required to verify the quality of the design. Design verification activities shall include the carrying out of alternative calculations, independent checks of design calculations, specifications, drawings, and contract documents, conducting and documenting design reviews, undertaking qualification tests and demonstrations, and comparing the design with a similar proven design, if available. Design reviews include reviews or constructability, operability, and maintainability.

Appropriate procedures shall be established for the identification, documentation, review, and approval of all changes and modifications to the design to ensure compliance to design requirements and for development of "as built" documents as part of the design documentation at the end of the project.

Drawings and other design documents shall be controlled documents. Changes to approved drawings, the revision status, and the dates the drawings were approved shall be recorded. Changes to approved drawings or specifications shall only be made in accordance with established procedures.

Document Control (Element 4)

The Contractor shall develop and implement a system for the control of all documents related to the Specifications including all:

- Contract Documents (e.g., General and Technical Provisions).
- Correspondence.
- Submittals.
- Design Documents.
- Quality Documents.
- Drawings.
- Plans, Procedures, and Reports.
- Manuals, Parts Catalogs and Training Materials.

A revision tracking system shall be implemented on all documents, as applicable and a formal log of all Contract material shall be established and maintained. Formal approval and sign-off shall accompany all Contract documents.

The Contractor shall develop methods for control of project documents that shall include the review of the documents by authorized personnel, the distribution and storage of the documents, the elimination of obsolete documents, and the control of changes to the documents.

The Contractor shall maintain drawings and other documentation that completely describe a qualified bus that meets all of the options and special requirements of this procurement. The quality assurance organization shall verify that each transit bus is manufactured in accordance with these controlled drawings and documentation.

All contract documents shall be maintained by the Contractor throughout the duration of the Contract including the life of the product (12 years after the last bus delivery date).

Purchasing (Element 5)

The Contractor shall establish and implement measures to ensure that all purchased components and services conform to the requirements of the Contract Documents. These measures shall provide for incoming inspection/testing, source inspection/testing, inspection of production facilities, audits of documentation, and the review of Subcontractor and Supplier quality assurance plans and procedures.

The Contractor shall conduct meetings with Subcontractors and Suppliers or provide other means to clarify provisions of the Contractor's procurement documents for materials, services and components supplied for this Contract. Procurement documents shall incorporate adequate technical and quality provisions.

These requirements shall be identified by reference to specific drawings, specifications, codes, standards, regulations, procedures, instructions, and acceptance criteria. MDT shall be permitted to review Contractor-issued purchase orders to confirm that these requirements are forwarded to all Subcontractors and Suppliers.

The Contractor shall establish and maintain a documented list of acceptable Subcontractors and Suppliers for the desired service or product, consistent with applicable procurement requirements. The criteria for selection, evaluation and re-evaluation of the Subcontractors and Suppliers shall be established and maintained.

As part of the selection, evaluation, and re-evaluation process, the Contactor shall perform onsite quality assurance audits (e.g. systems audit) on all Subcontractors and Suppliers that provide critical components and subsystems for which an FAI is required.

Product Identification and Traceability (Element 6)

The Contractor shall establish and implement procedures to ensure that all items (lots, materials, parts and components) are handled, stored, and shipped in a manner that ensure identification and control to prevent the use of incorrect or defective items and to ensure that only correct and acceptable items are used or installed.

Identification shall be maintained either on the items or in documents traceable to the items throughout the receipt, storage, fabrication, repair, and shipping. Markings shall be transferred to each part of an identified item when subdivided and shall not be obliterated or hidden by surface treatments. The status of inspections, tests, and other activities shall be maintained with indicators, such as tags, stamps, shop travelers, or other MDT-approved means.

Item identification methods and procedures shall be implemented to ensure that product (bus) traceability is established and maintained in a manner that allows critical components and subsystems to be traced to purchase order, batch number,

point in time, applicable drawings, specifications, or other documents during all stages of production, delivery, and installation or end use.

Process Control (Element 7)

Control of manufacturing and production processes shall be properly monitored and reviewed by the Contractor. Procedures defining the methods of monitoring, reviewing, and revising production and manufacturing processes and procedures shall be properly documented. The major purpose of the process control is to ensure that work is performed in the proper sequence.

All manufacturing personnel shall abide by "hold" and "examination" points and shall not obscure work to be reviewed. If MDT cannot properly view any area for inspection, the Contractor shall, at its own expense, make modifications such that the Work can be adequately inspected.

The Contractor shall establish systems that shall allow for the monitoring of special processes.

Inspection and Testing (Element 8)

The Contractor shall plan, conduct, and maintain an inspection and testing program in accordance with the requirements of an MDT-approved Inspection and Test Plans including quality assurance procedures. The inspections and tests shall verify conformance of all items and activities to acceptance criteria of the Inspection and Test Plans, procedures, instructions, and drawings. In general, all requirements of the Contract Documents shall be subject to verification by inspection and testing. Inspections and tests shall be conducted in accordance with MDT approved, written checklists by persons other than those who performed the Work.
The Contractor shall strictly maintain inspection and testing procedures. The procedures shall be applied to:

- Contractor acceptance inspections/tests.
- Source inspections/tests.
- Incoming inspections/tests.
- In-process inspections/tests.
- Production inspections/tests.
- Hold-point inspections/tests.
- Final inspections/tests.
- First article configuration inspections/tests.
- Pre-shipment inspections/tests.

The Contractor, Contractor's Suppliers, and Subcontractors shall extend to MDT full cooperation and all reasonable facilities to permit the convenient inspection of the Work, including adequate office space, utilities, and facilities at the Contractor's Suppliers' and Subcontractors' plant, at no cost to MDT. The office space, in close proximity to the final assembly area, shall be equipped with desks, computers with internet access, outside and interplant telephones, beepers, file cabinets, chairs, and clothing lockers sufficient to accommodate the MDT staff and shall have

access to photocopies machines, telefax machine, and secretarial services. The presence of MDT staff in the plant shall not relieve the Contractor of its responsibility to meet all of the requirements of this procurement.

Provisions shall be made for services of a full-time interpreter if plant personnel do not speak English. Copies (in English) of all drawings, diagrams, and data shall be supplied, as needed, to inspect and check the design, construction, assembly, installation, workmanship, clearance, tolerance, and functional testing of all bus parts and apparatuses.

The Contractor shall notify MDT prior to performing any inspections or tests during manufacture in order to allow MDT representatives to witness the activity.

The Contractor shall specify, subject to the MDT's approval, the type of inspection and testing employed for each item, either sampling, statistical, or 100%. When the Contractor employs sampling or statistical inspection and testing, the details shall be provided in their quality assurance plan. A method of increasing the standards shall be included with any sampling program if nonconforming product has passed the receiving inspection and testing.
Such inspections and tests may utilize statistical sampling per ANSI/ASQC Z1.4 and/or ANSI/ASQC Z1.9, or Contractor shall submit alternative standards which it has verified to be equivalent to those specified herein to the MDT for approval. The Contractor shall include as part of the receiving (incoming) inspection and test:

- Checklists for materials and components.
- Acceptance test records.
- Certifications or test results required by the specification or purchase order.

The Contractor shall establish and implement measures to ensure that all items will perform satisfactorily in service in accordance with the requirements of the Contract Documents.
Functional testing, operational testing, and acceptance testing shall be performed under controlled conditions in accordance with the Inspection and Testing Plan, Quality Procedures, and the requirements herein.

The Contractor shall have provisions in place to ensure that any previously inspected and/or tested area of the Work shall be re-inspected and/or tested after rework, modifications, or retrofits.

Inspection Plan

The Contractor shall submit an Inspection and Test Plan that describes all inspections, tests and other verification activities (e.g. analyses, demonstrations) that are planned for all items (components, subsystems or system, bus, etc.).

A Preliminary Inspection and Test Plan shall be submitted at project phase Preliminary Design Review (PDR) for review and comment. A Final Inspection and Test Plan shall be submitted at project phase Final Design Review (FDR) (prior to manufacture of the first bus) for MDT review and approval. The plans shall be kept updated to reflect revisions throughout the life of the contract.

The plans, as a minimum, should include the following:

- A description of the items and their characteristic to be inspected or tested, along with the type of verification planned (inspection, test, analysis, demonstration), an indication if it is safety critical, and reference to (if any) technical specifications or requirements.
- The plans shall define the inspection and testing milestones on a schedule indicating planned dates for their occurrence. Changes to the Inspection and Test Plan shall be submitted for review and approval.
- Identification of inspection stations, facilities, and equipment
- Where the plan's activities will take place (e.g. supplier's facility, 3rd part test lab, etc.).
- Identifying the personnel/departments responsible for conducting the plan's activities, including any 3rd party agencies or consultants.
- A description of how the results will be recorded and the forms to be used.

The Inspection and Test Plan may be used by MDT as an aid to scheduling personnel for inspections at Subcontractors' and Suppliers' locations as well as on-site at the Contractor's facility.

Inspection and Test Procedures and Reports

All inspections shall be conducted using approved procedures and criterion that shall be generated and maintained by the Contractor. Procedures for all inspections shall be submitted to MDT for review and approval.
Inspection report format and content shall be approved by MDT and shall be submitted within 10 days after the completion of an inspection.
As a minimum, inspection reports shall include:

- The Inspector's name(s).
- The witness' name(s).
- The inspection date and location, test equipment name, model, calibration information, and test function.
- Bus or subsystem equipment name, part number, inspection procedure, and serial numbers.
- Any reference document numbers.
- The quantity and a description of any or all deficiencies.
- The nature of corrective actions.
- The quantities approved or rejected.
- Non-legible information will be considered failures.

Tracking System

The Contractor shall maintain a system to track inspections of all components, materials, and buses. The tracking system shall accurately indicate the following test status of any item:

- Whether it has been inspected.
- If it has been inspected in terms of its disposition.
- Whether it was accepted or rejected.
- The system shall identify the inspection status of any bus.

Inspected Component Disposition Status

The Contractor shall maintain a system capable of tracking the inspection status of all materials, components, subsystems, and buses by lot, serial, component, or bus number.

Defective Material and Component Disposition

The Contractor shall label and segregate all material and components determined to be noncompliant with the Contract Documents. Materials and components noncompliant with the requirements of the Contract Documents, or which have been otherwise rejected, shall not be used on buses without receiving prior written authorization from MDT. Requests for authorization to use nonconforming materials or components shall be submitted for review and approval and shall be supported by documentation that details what is nonconforming about the material and explains why the nonconforming material shall be allowed.

Components and/or subsystems that become obsolete as a result of engineering changes or other actions shall be controlled to prevent unauthorized assembly or installation. Unusable articles shall be isolated and then scrapped.

First Article Inspection

The First Article Inspection (FAI) verifies the manufacturing capability to produce an item in accordance with design documents.

A First Article Inspection (FAI) shall take place at the point of assembly, whether at the Supplier's or Contractor's facility, after completion of factory acceptance tests on the first production unit of every critical component and subsystem to verify proper configuration, materials, operation, and production methods.

The FAI shall verify, as a minimum, the following. Verifications shall be documented:

- Physical dimensions, including mounting and interface,
- Weight,
- Completeness of earlier inspection and test results,
- Compliance to specified special processes (e.g. crimping, soldering, welding, non-destructive testing, etc.)
- Workmanship,

- Material (through certifications)

MDT shall be notified in writing of the proposed FAI date and provided complete documentation and agenda. The FAI shall be scheduled for a date that is mutually acceptable to both the Contractor and MDT.

The FAI shall verify that production hardware complies with design configuration and drawings as agreed upon during the Final Design Review or latest agreement. The factory acceptance test procedures and results shall be available for review at the FAI.
MDT may request the Contractor to repeat the factory acceptance test or parts of it at the FAI.

The Contractor shall submit to MDT for review and approval the latest approved drawings, inspection and test procedures, specifications, quality documentation, and a list of drawings required for adequate evaluation of the equipment under inspection and test. The list of drawings shall be identified by revision and shall be complete to the line replaceable unit.

The FAI report shall be submitted to MDT for review and approval after the performance of any FAI. The FAI shall remain open until all FAI items are closed and the Contractor submits a final MDT-approved FAI report.

Contractor Source/Incoming Materials Inspection

The Contractor shall provide for the inspection of all materials. The inspections may take place either at the Supplier's or at the Contractor's facilities. The Contractor shall propose to MDT for review and approval a materials inspection program as part of the Inspection Plan as described herein. A method of increasing the requirements and standards shall be included with any sampling plans if non-conforming products have passed the receiving inspection.

The Contractor shall include as part of the incoming inspection:

- Checklists for materials and components.
- Any acceptance/rejection test records.
- Supplier's submitted certifications or test results required by the specification or Contract documents.

Manufacturing/In-Process Inspection

MDT will have personnel on-site at the Contractor's manufacturing facility to audit the progress of the Work. The Contractor shall give the on-site personnel advanced written notification of scheduled inspections. MDT, at its own discretion, may opt to:

- Audit the Contractor's inspection after it has been completed.
- Perform a joint inspection with the Contractor.
- Perform its own inspection after the Contractor's inspection has been completed.

- Request re-inspection and testing.

Inspection stations shall be at the best locations to provide for the work content and characteristics to be inspected. Stations shall provide the facilities and equipment to inspect structural, electrical, hydraulic, and other components and assemblies for compliance with the design requirements.

Pre-Ship Inspection

Every bus shall be inspected by the Contractor with MDT representative, prior to releasing any bus for shipment to MDT. A pre-shipment (outgoing) inspection shall verify the completeness of the testing at the Contractor's facilities and completeness of the documentation package of each bus. A part of this inspection shall be a final physical inspection of the bus as prepared for shipping to MDT.

Incoming Inspection

Upon delivery of materials, components, assemblies, subsystems, or buses at MDT's facilities, MDT will perform incoming inspections in accordance with this Contract.

Inspection, Measuring, And Test Equipment (Element 9)

The Contractor shall establish and implement MDT-approved control measures to ensure that tools, gauges, instruments, and other measuring and test equipment used for the Work on this Contract are calibrated in accordance with the quality assurance plan. These measures shall also ensure that all such items are of proper type, range, accuracy, and tolerance for their specified use.

Measuring and test equipment shall be calibrated, adjusted, and maintained at prescribed intervals against certified equipment to adhere to nationally recognized standards as approved by MDT. The calibration status shall be labeled or otherwise recorded to ensure adherence to calibration schedules. Evidence of compliance shall be readily available for MDT inspection and shall identify the date of the last calibration, the individual who performed the calibration, and when the next calibration is due. When any equipment is that found to be out of calibration during the inspection process, all characteristics measured with such instrument shall be re-inspected.

When production jigs, fixtures, tooling masters, templates, patterns, and other devices are used as media of inspection, they shall be certified for accuracy at formally established intervals and adjusted, replaced, or repaired as required to maintain quality.

Inspection and Test Status (Element 10)

The Contractor shall maintain a system to track the inspection and test status of all components, materials, and buses during manufacturing, installation, testing and warranty. The system shall identify the status of any such inspected item to indicate acceptance, rejection, disposition, or a pending inspection. The system shall be capable of identifying the present inspection status of any bus.

The Contractor shall provide a verification of readiness in the form of completed and signed inspection check sheets before any bus is shipped to MDT. The inspection check sheets shall be included in the Bus History Record.

Nonconformance (Elements 11)

The Contractor shall establish and implement measures to ensure that items that do not conform to specified requirements are controlled to prevent inadvertent installation. The control measures shall contain procedures for identifying, documenting, segregating, and disposing nonconforming items, as well as procedures for notifying the affected organizations (e.g., the Subcontractor, Supplier or MDT). Defective items shall be red-tagged or otherwise marked and segregated in a designated holding area, pending disposition instructions.

The Contractor shall establish a Material Review Board (MRB) to review and to provide disposition of nonconforming materials. The MRB shall include, at a minimum, representatives from the Contractor's Materials, Engineering, Production, Procurement, and Quality departments. The MRB shall suggest for MDT's approval whether a nonconforming product shall be scrapped, repaired, use-as-is, returned to Supplier, or reworked in-house.

MDT may be present at MRB meetings to assist in the evaluation of nonconforming materials and to approve the MRB's determination. The MRB shall promptly identify the causes of defects, recommend corrective actions to prevent recurrence of the defects, and take follow-up action to verify the completion of corrective actions.

Any material that the MRB identifies as "repaired" or "use-as-is" must be approved by the MDT prior to being used on a bus.

MDT has the right to have production at any nonconforming site stopped until the nonconformity is resolved to the MDT's satisfaction and approval. Any cost and/or delay of Work caused by any nonconformance of the Contractor or by any entity performing Work for the Contractor, shall be at the Contractor's expense and shall not serve as a basis for an extension of time for program or delivery schedules.

Corrective Action (Element 12)

Corrective and preventive action procedures shall be established, documented, and maintained. These include procedures for investigation of the cause of nonconforming work and the corrective/preventive actions needed to prevent recurrence, and procedures for analysis to detect and eliminate potential causes of nonconforming work. This element also includes implementing and recording changes in procedures resulting from corrective action.

Corrective and preventive action procedures shall be established for:

- Investigating the cause of nonconforming product and taking the corrective actions needed to prevent recurrence.
- Analyzing processes to detect and eliminate potential causes of

its effectiveness. Audit plans shall be developed and shall identify the scope, schedule, personnel, and the notification of organizations to be audited.

Audits shall be performed in accordance with the checklists by personnel who have not been assigned responsibility for performing the portion of the Work being audited. These personnel shall have the authority to conduct independent audits, recommend actions to correct and prevent recurrence of deficiencies, and take follow-up actions to verify completion of corrective and preventive actions.

Each Subcontractor or Supplier of critical components and subsystems that require FAI must pass an onsite quality assurance audit (e.g. systems audit) performed by the Contractor to assure that an adequate quality assurance program is established and functioning before a purchase order may be placed with that Subcontractor or Supplier. The Contractor shall maintain surveillance of the Subcontractor or Supplier until all its Contract requirements have been met.

Training (Element 15)

All personnel required to perform quality functions shall receive training in accordance with the quality program.
Training shall be directly applicable to the task or function being performed and refresher training shall be administered when changes to the function or process occur. All training shall be documented and readily available for inspection by MDT. The Contractor shall determine the training needs for their organization and the training needs of their approved Subcontractors and Suppliers. The Contractor shall administer the appropriate training as needed.

Sufficient qualified and trained inspectors shall be used to ensure that all materials, components, and assemblies are inspected for conformance with the qualified bus design.

Inspection personal shall be identified in the organizational chart included in the Contractors Quality Assurance Plan (QAP).

MDT Audits

General

MDT may audit the Contractor, or any Subcontractor, at anytime during the term of the Contract.

MDT may perform quality assurance functions during the life of the Contract. These functions may be performed independently and in addition to the Contractor's activities. These activities will help to ensure that the Contractor is performing the quality assurance functions as defined and agreed to by MDT and verify that all services and products delivered to MDT conform to the requirements of the Contract Documents. The quality assurance activities of MDT will in no way lessen, negate, or replace the quality assurance responsibilities of the Contractor.

Right of Access

The Contractor shall provide MDT with free access to the Contractor's shops, offices, and facilities in order to audit, inspect, examine, and test components/systems prior to and during component/system manufacture. Quality surveillance shall include, as appropriate, the selective review, observation, and evaluation of processes, records, reports, manufacturing operations, quality control systems, and programs to verify compliance with contractual quality requirements. This right of access includes the properties of all entities, or part there of, engaged in supplying any goods or services to the Contractor as a part of this Contract.

Documentation Submittal Requirement to MDT:

In addition to documentation submittal requirements specified in other sections of the Contract, the following documents are required to be submitted by the Contractor to MDT for review and approval with the specified time period:

Documents	Submittal Period
QAP, QAR Resume, & ISO Certificate	7 days after NTP
Project Management Plan and Schedule	15 days after NTP
Revised QAP, Quality Procedures	45 days after NTP
Preliminary Design Review Documentation	90 days prior to start of production
Preliminary Inspection and Test Plan	90 days prior to start of production
Final Design Review Documentation	30 days prior to start of production
Final Inspection and Test Plan	30 days prior to start of production
Baseline Documentation	30 days prior to start of production
Illustration Book with Detail Photos	3 days after release of 1st bus of each lot
Training Program Plan	30 days prior to start of production
Draft Manuals	60 days prior to release of 1st bus
As Built Documentation (e.g., Drawings, Schematics, etc.)	3 days after delivery of last bus of each lot

Audit Reports

MDT will issue quality assurance audit reports following the completion of the quality assurance audit. The report will require a corrective and preventive action for each nonconformance, if applicable. The Contractor shall inform the Subcontractors and Suppliers of MDT audit findings and requested responses.

The Contractor shall prepare responses to MDT in a format consistent with MDT audit reports.

The Contractor shall describe any corrective and preventive actions that the Supplier and/or Subcontractor must undertake, as a result of a noncompliance discovered during an audit, and shall determine the date upon which these corrective and preventive actions must be initiated in order to achieve compliance.

MDT will decide if the corrective and preventive action plans specified by the Contractor are sufficient.

Resident Inspector

MDT may be represented at the Contractor's plant by Resident Inspector(s). They shall monitor, in the Contractor's plant, the manufacture of transit buses built under this procurement. The Resident Inspector(s) shall be authorized to approve the pre-delivery acceptance tests and to release the buses for delivery.

Upon request to the Contractor's Quality Assurance Representative, the Resident Inspector(s) shall have access to the Contractor's quality assurance files related to this procurement. These files shall include drawings, material standards, parts lists, inspection and testing processing and reports, and records of defects.

No less than 30 days prior to the beginning of bus manufacture, the Resident Inspector(s) shall meet with the Contractor's Quality Assurance Representative. They shall review the inspection/testing procedures and check-lists. The Resident Inspector(s) may begin monitoring bus construction activities two weeks prior to the start of bus fabrication.

The Contractor shall provide office space for the Resident Inspector(s) in close proximity to the final assembly area. This office space shall be equipped with desks, outside and interplant telephones, computers with internet access, beepers, file cabinets, chairs, and clothing lockers sufficient to accommodate the Resident Inspector staff and shall have access to a photocopy machine, telefax machine, and secretarial service. The presence of these Resident Inspector(s) in the plant shall not relieve the Contractor of its responsibility to meet all of the requirements of this procurement.

Equipment Use by Resident Inspectors

The Contractor's gauges and other measuring and testing devices shall be made available for use by the Resident Inspectors to verify that the buses conform to all specification requirements. If necessary, the Contractors personnel shall be made available to operate the devices and to verify their condition and accuracy.

Acceptance Tests

Responsibility

Fully documented tests shall be conducted on each production bus following manufacture to determine its acceptance by MDT.

These acceptance tests shall include pre-delivery inspections and testing by the Contractor and inspections and testing by MDT both before and after the buses have been delivered.

Pre-Delivery Tests

The Contractor shall conduct acceptance tests at its plant on each bus following completion of manufacture and before delivery to MDT. These pre-delivery tests shall include visual and measured inspection, as well as testing the total bus operation. The tests shall be conducted to ensure that the completed buses have

nonconforming product.

- Initiating preventative actions to deal with problems to a level corresponding to the risks encountered.
- Ensuring that corrective actions are taken and that they are effective.
- Implementing and recording changes in procedures resulting from corrective and preventive actions.

Preventive action shall be taken with respect to nonconforming work in order to eliminate potential problems. The Contractor shall establish systems to eliminate the causes of potential nonconformities in order to prevent their occurrence. The Contractor shall maintain records of the results of both corrective and preventive actions taken (e.g. corrective/preventive action request reports, corrective/preventive action status matrix, etc.). All corrective/preventive action plans that relate to post delivery defects shall be submitted to MDT for review and approval.

Quality Records (Element 13)

The Contractor shall ensure that all quality records are prepared and maintained in accordance with the Contractors Quality Assurance Plan, associated Quality Procedures, and the requirements of this Contract. These records and data shall be available for review by MDT's. Resident Inspectors. They shall be legible, identifiable, readily retrievable, and protected against damage, deterioration, and loss. The records shall include, but not be limited to:

- Procurement documents and records.
- Process control reports.
- Welder qualification certificates.
- Inspection and test reports.
- Inspection and test checklists.
- Calibration reports.
- Nonconformance reports.
- Corrective/ Preventive action reports and status matrix.
- Audit reports.
- Training records.
- Other pertinent data.
- Design Control Records
- Bus History Record

All quality records shall be maintained by the Contractor throughout the duration of the Contract including the life of the product (12 years after the last bus delivery date).

Quality Audits (Element 14)

The Contractor's Quality Assurance Plan shall describe the form, schedule, and checklists to be used for audits that shall be used to verify Contractor, Supplier and Subcontractors compliance with all aspects of the quality assurance program and

attained the desired quality and have met the requirements in the Technical Specifications. The tests shall be conducted in accordance with written tests plans and shall be recorded on appropriate test forms provided by the Contractor. The pre-delivery tests shall be scheduled with sufficient notice so that they may be witnessed by the Resident Inspectors, who may reject the results of the tests. The results of pre-delivery tests, or any other tests, shall be filed with the assembly inspection records for each bus. The underfloor equipment shall be made available for inspection by the Resident Inspectors using a pit or bus hoist provided by the Contractor. A hoist, scaffold, or elevated platform shall be provided by the Contractor to easily and safely inspect bus roofs. Delivery of each bus shall require written authorization of a Resident Inspector. Authorization forms for the release of each bus for delivery shall be provided by the Contractor. An executed copy of the authorization shall accompany the delivery of each bus. Failure to provide adequate inspection facilities for the Resident Inspectors will result in no-shipment of buses from the production plant without relief from liquidated damages due to schedule delays.

All buses shall be subjected to water tests simulating the severe rain conditions experienced in the South Florida environment. Windows, escape hatches, doors, etc. are subject to an approved water test to be conducted at the manufacturers facility by the manufacturer and shall be observed by the Resident Inspector(s). Water testing may be verified by further testing at Miami Dade Transit's Maintenance Facility prior to the acceptance of each vehicle if test observation or verification of leak repair is missed on or not observed by the Resident Inspector on any bus built for Miami Dade Transit. Any bus that fails to pass the water test shall be corrected by the contractor. The retest/corrective repair cycle shall repeat until the leak(s) have been eliminated to Miami Dade Transit's satisfaction.

Water Test Description

The roof, roof hatches, front cap, rear cap, sidewalls, passenger windows, driver's windows, destination sign windows, windshields, wheel wells and all doors of all coaches shall be water tested prior to the delivery of each unit to MDT as follows:

1. The water test shall consist of a series of nozzles which are strategically located around the perimeter of the vehicle so as to spray water over the entire surface of the vehicle.

2. The nozzles shall eject a volume of water no less than 2.6 gallons per minute per nozzle under a pressure of no less than 22 lbs. per minute measured at the nozzle tip.

3. The contractor shall be required to water test each vehicle under the conditions described above for no less than 30 minutes (15 minutes with A/C off, then 15 minutes with A/C on) to ensure there are no water leaks in the bus.

4. Bus road testing shall be conducted immediately after the water test.

Contractor shall take the necessary steps of corrective action to repair any leaks found as a result of the described test and shall repeat the 30 minute water test to ensure that corrective steps have been successful. This process shall be repeated until no leaks are found. Documentation of each bus shall be kept by the manufacturer as to the location of the leak, what caused the leak to occur and shall describe the repair action taken to prevent the leak from reoccurring.

If the Contractor's bus manufacturing process water test differs from the water test process and criteria described above, then any deviations must be approved by MDT Project Manager.

Air Conditioning Test

The Contractor shall conduct a test of the air conditioning system on the first production bus with representatives from MDT present to verify the performance of the air conditioning system. The air conditioning system must be capable of meeting the performance standards stated in Section on Air Conditioning, Heating and Ventilation, of the technical specifications. The contractor shall be responsible for providing the necessary test equipment for this and all other system tests.

The pre-delivery air conditioning test shall be scheduled with sufficient notice to allow the test to be witnessed by the Resident Inspector and other personnel selected by MDT. Within twelve hours of the completion of the air conditioning test MDT will notify the contractor if the bus passed the air conditioning test. If the bus fails the test the contractor shall be required to make modifications to all buses as necessary to ensure the buses meet the air conditioning specifications. After the modifications are complete the contractor shall repeat the test with MDT's representatives present to verify the success of the modifications. No bus may leave the contractor's plant until the first production bus passes the air conditioning test and until the modifications are incorporated into the following buses. MDT reserves the right to randomly select other production buses for testing of the air conditioning system if it believes the contractor has changed the system or the insulation in the bus.

Inspection - Visual and Measured

Visual and measured inspections shall be conducted with the bus in a static condition. The purpose of the inspection is to verify overall dimensional and weight requirements, to verify that required components are included and are ready for operation, and to verify that components and subsystems that are designed to operate with the bus in a static condition do function as designed.

Total Bus Operation

Total bus operation shall be evaluated during road tests. The purpose of the road tests is to observe and verify the operation of the bus as a system and to verify the functional operation of the subsystems that can be operated only while the bus is in motion. Each bus shall be driven for a minimum of 25 miles during the road tests. The plan shall be submitted to MDT for approval.

Observed defects shall be recorded on test forms. The bus shall be retested when defects are corrected and adjustments are made. This process shall continue until defects or required adjustments are no longer detected. Results shall be pass/fail for these bus operations tests.

Post-Delivery Tests
MDT shall conduct acceptance tests on each delivery bus. These tests shall be completed within 15 days after bus delivery and shall be conducted in accordance with written test plans. The purpose of these tests is to identify defects that have become apparent between the time of bus release and delivery to MDT. The post-delivery tests shall include visual inspection and bus operations. Buses that fail to pass the post-delivery are subject to non-acceptance. MDT shall record details of all defects on the appropriate forms and shall notify the Contractor of non-acceptance of each bus within 10 days after completion of the tests. The defects detected during these tests shall be repaired in a manner that has been mutually agreed upon. Final acceptance will be done by MDT, in Miami, following the post-delivery tests.

Visual Inspection

The post-delivery inspection is similar to the inspection at the Contractor's plant and shall be conducted with the bus in a static condition. Any visual delivery damage shall be identified and recorded during the visual inspection of each bus.

Bus Operation

The road tests for total bus operation are similar to those conducted at the Contractor's plant. Operational deficiencies of each bus shall be identified and recorded, and corrected prior to final acceptance.

28) Section 61.0 Warranty: Following is added to this Section:

Section 61.5 Extended Warranty for Allison Hybrid System (Optional)

The County may purchase Extended Warranty for Allison Hybrid System. The Allison Extended Warranty shall provide 3 years of coverage beyond the standard warranty coverage of 2 year for all 5 hybrid major components including the Energy Storage System (ESS) battery cell coverage that is limited to 75,000 amp-hours usage.

The standard warranty coverage for the Allison Electric Drive **E^{p}40/E^{p}50 System** ™ hybrid system will be Allison's limited warranty with its normal terms and conditions. The standard coverage is 2-Years form in-service date for 100% parts/labor & unlimited mileage.

Three (3) years of extended warranty coverage (for a total of 5 years coverage) include **all 5 hybrid major components**, which are:

(1) Drive Unit
(2) Dual Powered Inverter Module (DPIM)
(3) Energy Storage System (ESS)

(4) Hybrid Control Modules (2 each): Vehicle Control Module (VCM) & Transmission Control Module (TCM)
(5) Push Button Shift Selector (PBSS) with the following **limitations**:

3 years (total = 5) or **300,000 miles** whichever comes first.
(Note): ESS battery cell limitation up to **75,000 amp--hours usage**
The coverage of ESS battery cells is limited to amp-hours usage as recorded by t he Energy Storage System's diagnostics.

29) Section 65.0 Liquidated Damages is hereby deleted in its entirety and replaced by the following:

Section 65.0 Liquidated Damages (Revised):

65.1 Liquidated Damages for Late Delivery and Non-Acceptance of Transit Buses
If the Contractor fails to deliver the unit(s) complete per specification and ready for operation within the time (delivery schedule) specified in Appendix B, Delivery Schedule, it is understood and the Contractor agrees that the amount of $200 per unit per calendar day to a maximum ten thousand ($10,000.00) per unit may be deducted by the County from monies due the Contractor for each intervening calendar day of Late Delivery or Non-Acceptance, not as a penalty, but as liquidated damages. The County will not assess liquidated damages as long as the delivery of the 12 buses is within 30 days of the scheduled delivery date.

Late delivery of buses received on a Monday or the first work day following a holiday will not be assessed liquidated damages for the prior weekend or holiday.

Should the bus fail Final Acceptance Tests, the liquidated damages shall again become assessable beginning on the date of written Notification of Non-acceptance until the defects are corrected and the bus is again presented for acceptance.

The Contractor shall not be liable for any Liquidated Damages if performance failure arises out of causes beyond the control and without the fault or negligence of the Contractor including but not limited to acts of nature, war, fires, floods, trade embargo, freight embargo etc. Should a performance failure occur, the Contractor shall notify the Project Manager in writing and submit proof of the circumstances for non-performance in accordance with Sections 65.2 and 65.3 below. Immediately following the resolution of circumstances responsible for non-performance, the Contractor must re-negotiate delivery schedule with the County.

65.2 Notification of Delay
The Contractor shall notify the Project Manager as soon as the Contractor has, or should have, knowledge that an event has occurred, which will delay deliveries. Within five (5) calendar days, the Contractor shall confirm such notice in writing furnishing all available details.

65.3 Request for Extension of Time Due to Unavoidable Delays
The Contractor agrees to supply, as soon as such data are available, any reasonable proofs that are required by the Project Manager to make a decision on

any Requests for Extension. The Project Manager shall examine the request and any documents supplied by the Contractor and shall determine if the Contractor is entitled to an extension and the duration of such extension. The Project Manager will notify the Contractor of the decision in writing.

65.4 Liquidated Damages for Failure to Deliver Manuals
If the Contractor fails to deliver manuals, the Contractor agrees that the amount of five thousand ($5,000.00) dollars may be deducted by the County from monies due the Contractor, not as a penalty, but as liquidated damages.

65.5 Liquidated Damages for Late Warranty Repairs
See Section 61.0 of Attachment A of Broward Contract.

65.6 Payment of Damages
The Contractor hereby agrees to pay the liquidated damages, and not by way of penalty, to County and further authorizes the County to deduct the amount of the damages from money due the Contractor under the Contract, computed as aforesaid. If the monies due the Contractor are insufficient to cover the amount due and owing to the County, the Contractor shall pay the County the difference or the entire amount, whichever may be the case, within thirty (30) calendar days after receipt of a written demand by the County.

Interest at the rate of 1.0% per month (12% per annum) may be added to the amount of damages which are unpaid thirty (30) calendar days after receipt by the Contractor of a written demand by the County. The County, at its sole discretion, may in some cases allow damage payments to be made later than is stated above. Doing so shall not be considered as a waiver on the part of the county of any rights under this Contract.

30) Following is added as Section 66.0 Acceptance

66.1 Final Acceptance of Bus
Delivery of the bus to Miami-Dade County does not constitute Final Acceptance for the purpose of payment. Final Acceptance will be determined by signed notification of the Chief, MDT Materials Management Division or designee, and shall be given only after a thorough inspection by MDT indicates that the bus meets all contract specifications and conditions and that the engineering, materials, and workmanship exhibit a level of quality and performance consistent with or exceeding industry standards. MDT will conduct Final Acceptance tests on each delivered bus. These tests will be completed within fifteen (15) working days after bus delivery. MDT will notify the Contractor in writing of acceptance or non-acceptance within ten (10) working days after completion of tests. Final Acceptance may occur earlier if MDT notifies the Contractor in writing of early acceptance or places the bus in revenue service. If the bus fails these tests, it shall not pass Final Acceptance until the repair procedures defined in Section 66.2, below have been carried out and the bus retested until it passes.

66.2 Repairs after Non-acceptance
MDT will provide a written Notice of Non-acceptance to the Contractor which will include the request for repairs. MDT may, at its sole discretion, require the

Contractor, or its designated representative, to perform the repairs after non-acceptance.

66.3 Repairs by Contractor

If MDT requires the Contractor to perform repairs after non-acceptance of the bus, the Contractor shall begin work within five (5) working days after receiving written notification from MDT of failure of acceptance tests. MDT will make the bus available to complete repairs timely with the Contractor repair schedule.

The Contractor shall provide, at its own expense, all spare parts, tools, and space required to complete the repairs. At MDT's option, the Contractor may be required to remove the bus from MDT's property while repairs are being done. If the bus is removed from MDT's property, repair procedures must be diligently pursued by the Contractor, and the Contractor shall assume risk of loss while the bus is under its control. The Contractor shall provide a written statement to MDT Project Manager verifying the assumption of the risk of loss.

31) Following is added as Section 67.0 Delivery

67.1 Delivery of Spare Parts and Ancillary Equipment
Delivery of the spare parts and ancillary equipment listed in Appendix B, Delivery Schedule, shall be delivered in the quantities authorized by each NTP before or at the time the last bus is delivered.

67.2 Bus Delivery Procedure
The County's designated agent, General Superintendent of MDT Metrobus Maintenance or his designee, will sign the delivery confirmation and at the point of delivery conduct a cursory inspection of the bus. Delivery of the buses shall be F.O.B. point of destination by either Common Carrier Driveway or Rail Transportation. The buses shall be delivered at a rate not to exceed five (5) buses per day Monday through Friday, (excluding holidays). Hours of delivery shall be 7:30 a.m. through 3:00 p.m. EST. Delivery shall be made to the following address:

Miami-Dade Transit.
Metrobus Maintenance Administration
3295 NW 31 Street Miami, Florida 33142
Miami, Florida 33142

The County is not responsible for any shipping/handling/delivery charges.

67.3 Delivery of As-built Drawings
The Contractor shall provide 1 set of as-built drawings of buses delivered no later than thirty (30) days after the delivery of the last bus. Subsequent Notice to Proceeds that did not incur a change in bus design do not require as-built drawings.

67.4 Delivery of Production Buses
Prior to the time of delivery, the Contractor will be required to produce the following documents:

1. Manufacturer's statement of origin made out to Miami-Dade County, Florida, 2225 N.W. 72 Avenue, Miami, Florida 33122.

2. Warranty Certifications.

   All documents mentioned above are to be delivered to or hand carried to the Chief of Maintenance Support Services or designee, 3311 N.W. 31st Street, Miami, Florida 33142.

67.5 Assumption of Risk of Loss
MDT shall assume risk of loss of the bus upon delivery. Prior to this delivery the Contractor shall have risk of loss of the bus, including any damages sustained during delivery. If the common carrier drive away delivery method is used, drivers shall keep a maintenance log in route and it shall be delivered to MDT with the bus.

32) Following is added as Section 68.0 Items to be provided by Miami Dade County Transit Department:

1. Farebox, to be supplied and installed by MDT
2. Driver Control Unit (DCU), to be supplied and installed by MDT
3. Automated People Counter (APC) to be installed by NABI.
4. base plate for farebox
5. Ericsson radio package #350A1977, consisting of components for radio, VLU, TCH, handset, cab speaker, terminal blocks, filters, and specialized cables (See item No. 24, Section 54.6).

All necessary hardware and electrical wires to ensure that the installation of items (1 thru 4 above) is completed and operational shall be provided by NABI.

33) Training and Manuals: In accordance with the Broward County Contract, following training and manuals shall be provided at no additional charge to the County.

Training: The training covered in Broward County Contract (Section 63.0) is hereby amortized for 13 buses to be purchased by the County. The Contractor shall provide 131 hours of training to the County. This training shall cover all elements as included in the Broward Contract.

Module #	Module	Class Size	Duration	# Sessions	Hours
1	Operator Hybrid F&O	TBD	4 hrs	4	16
2	Mechanic Hybrid F&O	TBD	4 hrs	6	24
3	Mechanic Hybrid Safety	10	4 hrs	6	24
4	Multiplex IO	10	16	2	32

TRAINING MODULES (hybrid)	EP Familiarization (2 hrs)	EP System Electrical Safety (0.5 hr)	EP System Troubleshooting (5 hrs)	EP System In-Chassis Service (4 hrs)	EP System (Allison DOC) (4.5 hrs)
Trainer (16 hr)	X	X	X	X	X
System Preventative Maintenance(2.5 hr)	X	X			
System Troubleshooting / Service (16 hr)	X	X	X	X	X
System Familiarization (2 hr)	X	**1 times**			

NABI Instructed classes- 96 hrs
Vendor Hybrid classes-- 35 hours
Total- 131 hours

Technical Manuals: The manuals included in the Broward County Contract (Section 58.0) are hereby amortized for 13 buses to be purchased by the County.

- Service (3)
- Electrical (3)
- Parts (3)
- CD's (2) for parts and service manuals
- Engine (2)
- Transmission (0) not applicable for hybrids.
- Destination Sign (2)
- Wheelchair ramp (2)
- HVAC (3)
- Operator Manuals (6)
- E-drive (2)

34) Tools: In accordance with the Broward Contract, following tools shall be provided at no additional charge to the County:

- Engine diagnostic software/hardware (1)
- Hybrid Drive diagnostic software/hardware (1)
- HVAC readers (1)
- Towing Adapters (1)
- Dest Prog Software/Adapter (1)
- Dest Flash Memory Card (1)
- ABS software/adapters (1)
- Multiplex Software/Hardware (1)
- Cameras-computer, docking station (1)
- Laptop-Dell Latitude 610; Pentium M 740; 512MB; 60GB (1)

APPENDIX B
Delivery Schedule

The numbers of vehicles and parts described below are based upon the County's anticipated requirements.

1. Delivery Items and Schedule of Buses

Item	Description	Quantity	Delivery Date
1	Pilot 40' Hybrid Diesel/Electric Transit Bus*	1	01/30/10
2	40' Hybrid Diesel/Electric Transit Bus*	12	03/26/10
3	Spare Wheel	13	03/26/10
4	Special Tools and Equipment including: EP systems Maintenance tools, Diagnostic readers and/or software for HVAC system, Engine Tune Up Kit including belt tension gauge, seal installers/removers, injector timing gauge, valve lash gauges.	As per contract	03/26/10
5	Training	As per contract	TBD
6	As-Built Drawings	1 set	(30) days after the delivery of the last bus

*All 13 buses produced with '07 compliant engines.

Appendix C
Price Schedule

Cost Change #	Description	Pricing To Customer	Miami-Dade County Item in Appendix A (Broward County Contract Section #)
	Broward Selling Per Bus	$487,765	
	PPI Adjustment	$28,035	
Miami-3	Pricing to have equipment compartment locks keyed like Miami lot 8 buses	$0	26
Miami-4 A	Pricing to delete Broward exterior scheme and add Miami three color exterior scheme with decals	$5,156	1, 2
Miami-5	Pricing to add E.J. Ward auto fuel system info transmitter and gauge	$900	21
Miami-8	Pricing to delete Broward interior decal package and add same decal package	$0	5
Miami-9	Pricing to delete Broward Altro floor covering and add RCA TR852L marbleized blue floor covering same as Miami lot 8	$653	11
Miami-10	Pricing to delete Broward Pretoria florescent interior lighting and add Dinex LED interior lighting	$4,246	7 (21.12)
Miami-11-A	Pricing to delete Broward farebox and leave farebox provisions. (MDT is to be farebox provisions only, same as lot 8)	-$8,669	15 (30.1)
Miami-12	Pricing to delete Broward rear door touch bars and add Vapor Class System	$2,695	6
Miami-13-A	Pricing to delete Broward Recaro driver seat and add USSC driver seat with largest seat belts available same as MDT lot 8 includes dead man switch	$1,728	10
Miami-14	Pricing to delete Broward Twin Vision Chroma-4 front sign and add Twin Vision amber LED sign same as MDT lot 8	-$1,196	14
Miami-15A	Pricing to delete Broward radio and add Ericsson 350A1197 Radio System (radio is customer supplied and NABI installed)	-$7,740	24 (54.6)
Miami-16	Pricing to delete Broward battery and alternator cabling and add 4/0 marine grade battery and alternator cabling throughout	$0	22
Miami-18	Pricing to add remote differential breather shall be provided for the drive axle (located minimum of 30 above ground level) same as MDT lot 8	$144	18 (41.1)
Miami-19	Pricing to delete Broward engine probalyzer port and add fluid sampling ports (KP Series Pushbutton Sampling Valve) for engine, transmission, and hydraulic systems	$230	17

Miami-20	Pricing to delete Broward drain plug and add Femco speed click drain plug (engine)	$68	17
Miami-21	Pricing to add Fuel Pro fuel filter	$884	17
Miami-22	Pricing to add protective sleeves (high temperature resistant material) shall be provided to all fire suppression system hoses, high pressure hydraulic lines for hydraulic pump, fan motor and power steering	$0	16 (34.5)
Miami-23	Pricing to add liquid tape to all switches exposed to water	$90	16 (34.3)
Miami-24	Pricing to delete Broward male quick connect with ball value and add Aeroequip FD 41-1000-06-04 female quick disconnect couplings with retained caps front and rear	$0	19
Miami-26	Pricing to add Operator's Barrier (Driver Door)	$1,808	13 (28.1.4)
Miami-27 A	Pricing to delete Broward exterior mirrors and add same mirrors as Miami lot 8 flat mirror both sides manual L.H. and remote R.H.	$248	13 (28.21)
Miami-31	Pricing to delete Broward as bid windows and add hidden frame non operable windows and heat guard glazing to driver window	$3,490	3,12
Miami-32 A	Pricing to delete Broward 4One passenger seating and add AmSeCo Insight with Bs tax 2341/890 fabric and ARM securements same as MDT lot 8	$2,533	9
Miami-33	Pricing to add bus number permanently marked on shields and removable parts (such as belt guards and engine guards)	$183	4
Miami-37	Add MGM E-Stoke Brake Monitoring System	$3,084	
Miami-39	Pricing to delte Broward camera system add March camera system with 10 Kalatel cameras	$10,943	25
Miami-45A	Delete Broward APC System and add MDT supplied APC System NABI installed	-$2,033	24 (54.1)
Miami-48	Pricing to delete Broward Telefax adjustable driver's pedal system	-$471	
Miami-49	Price to delete three positions bike rack and two position Byk-Rak stainless steel bike rack	-$221	
Miami-51	Pricing to delete dual 8D batteries and add 4 Deka Group 31 batteries	-$30	23 (50.2)
Miami-53	Pricing to relocate the rear destination sign to the curbside of the rear HVAC door to move it away from the heat generated by the DPF after treatment system	$0	
Miami-54	Delete Broward Cummins ISL engine and add Cummins ISB Engine	-$2,196	17 (35.1)
	Delete Hub Veeder Root hub odometer	-$30	20 (46)
	SUBTOTAL FOR ONE BUS:	$532,297	
Miami-40	Change from BCT terms and conditions to MDT terms and conditions	$12,252	

	(a) TOTAL FOR ONE BUS :	$544,549	
	(b) TOTAL FOR 13 BUSES = (a) x 13:	$7,079,137	
	*****PRICING NOT PER BUS*****		
Miami-38	Pricing to add Digital Recorders ITS Architecture Software upgrade package Part# 798-0082-000 to ancillary items in contract (c)	$ 71,959	24
	TOTAL CONTRACT AMOUNT (b) + (c):	$7,151,096	
	OPTIONAL ITEMS (PER BUS)		
Miami-2	Pricing to add extended warranty for Allison hybrid	$43,734	

APPENDIX E

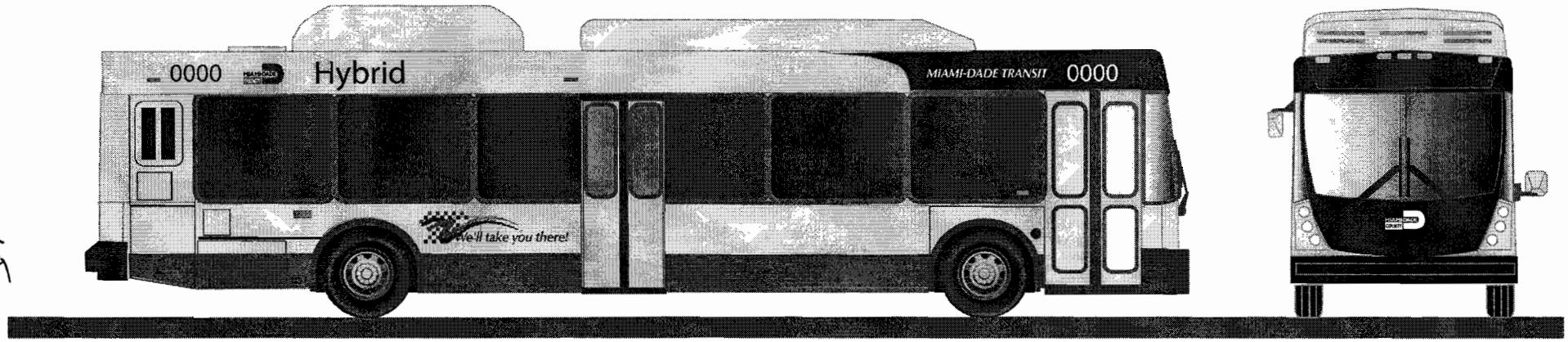

NABI 40' LOW FLOOR HYBRID BUS WITH EURO WINDOWS
3-COLORS

MIAMI DADE TRANSIT
MARKETING AND ADVERTISING DIVISION
FEBRUARY 18, 2009

APPENDIX F

NABI 40' LFW DIESEL HYBRID BUS FOR MIAMI

HIP-TO-KNEE: 26.00"
SEATING PASSENGERS: 38

SEATING COMPANY: AMSECO
SEAT MODEL: INSIGHT

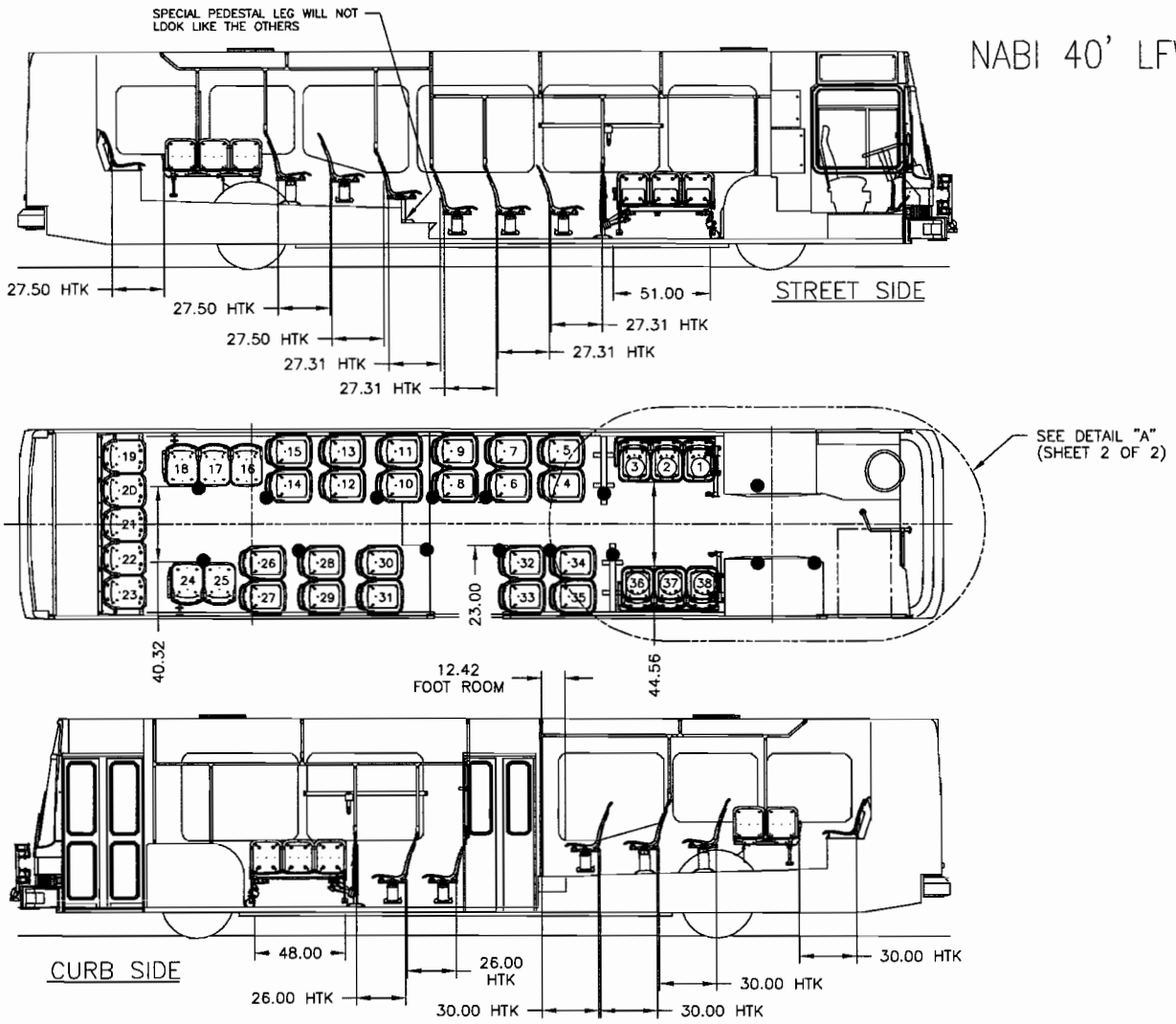

SHEET 1 OF 2

NABI INC.	Date: DECEMBER 10, 2008	SEATING LAYOUT
	Created by: STEVE ESTES	Drawing number: 110–MIAMI_HYBRID_INSIGHT–A01

NABI 40' LFW DIESEL HYBRID BUS FOR MIAMI

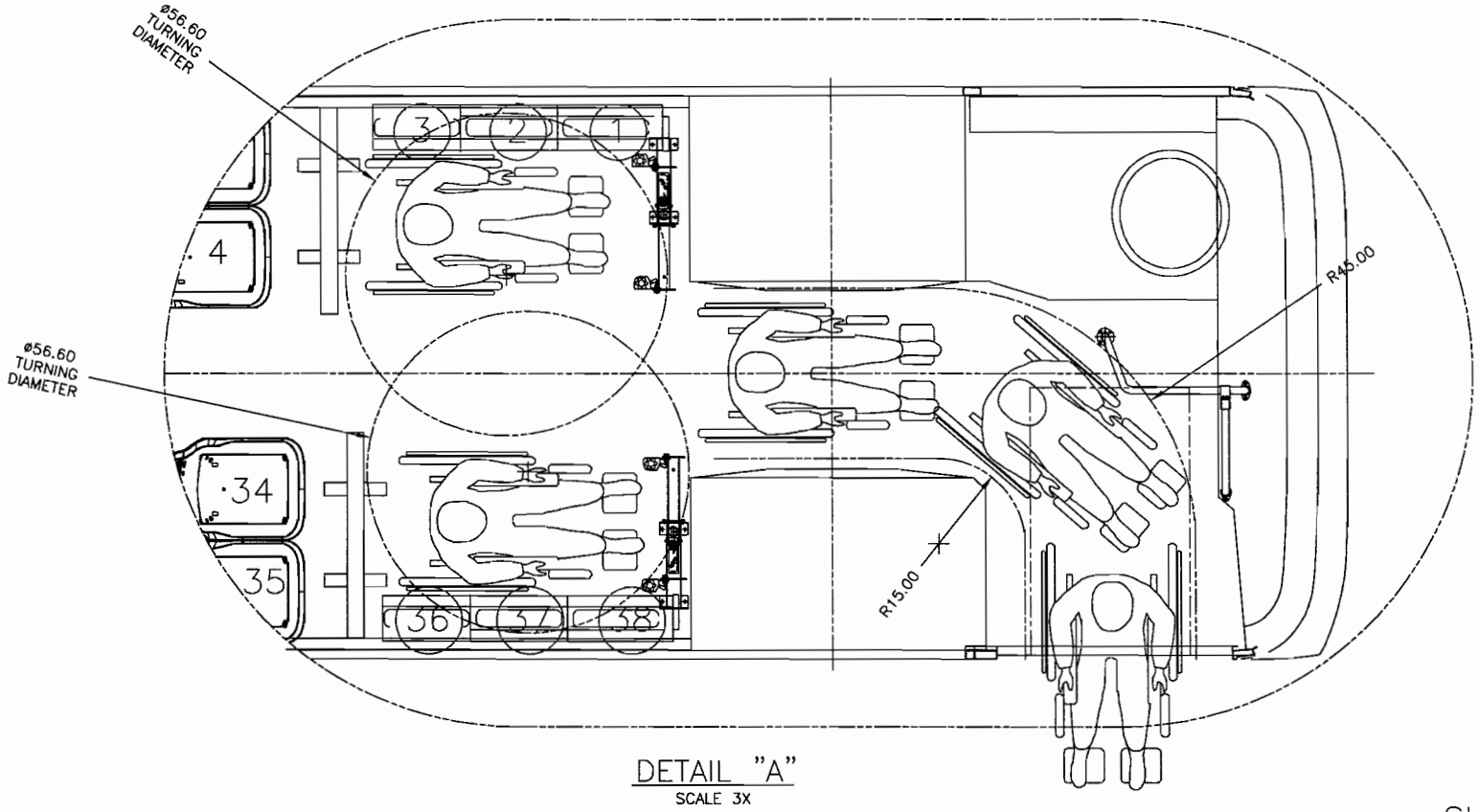

DETAIL "A"
SCALE 3X

SHEET 2 OF 2

NABI INC.	Date: DECEMBER 10, 2008	SEATING LAYOUT
	Created by: STEVE ESTES	Drawing number: 110-MIAMI_HYBRID_INSIGHT-A01