OFFICIAL FILE COPY
CLERK OF THE BOARD
OF COUNTY COMMISSIONERS
MIAMI-DADE COUNTY, FLORIDA

Memorandum

MIAMI-DADE COUNTY

Date: October 19, 2010

To: Honorable Chairman Dennis C. Moss
and Members, Board of County Commissioners

Agenda Item No. 5(B)

From: George M. Burgess
County Manager

Resolution No. R-1045-10

Subject: Resolution Relating to an Application by Ken Hill Investment Group, Inc. for a Class I Permit to Install a Dock and Two (2) Boatlifts in Biscayne Bay at 921 North Venetian Way, Miami, Miami-Dade County

---

Attached, please find for your consideration an application by Ken Hill Investment Group, Inc. for a Class I permit. Also attached is the recommendation of the Director of the Department of Environmental Resources Management and a proposed resolution approving the issuance of the Class I permit.

Assistant County Manager

Date: September 30, 2010

Memorandum

MIAMI-DADE COUNTY

To: George M. Burgess
County Manager

From: Carlos Espinosa, P.E., Director
Environmental Resources Management

Subject: Class I Permit Application by Ken Hill Investment Group, Inc. to Install a Dock and Two (2) Boatlifts in Biscayne Bay at 921 North Venetian Way, Miami, Miami-Dade County

---

Recommendation

I have reviewed the attached Class I permit application submitted by Ken Hill Investment Group, Inc. Based upon the applicable evaluation factors set forth in Section 24-48.3 of the Code of Miami-Dade County (Code), Florida, I recommend that the Board of County Commissioners (Board) approve the issuance of a Class I permit for the reasons set forth below.

Scope

The project site is located in Biscayne Bay at 921 N. Venetian Way, Miami, Miami-Dade County in Commission District 3.

Fiscal Impact/Funding Source

Not applicable.

Track Record/Monitor

Not applicable.

Background

The subject Class I permit application requests authorization to install a dock and two (2) boatlifts at a single family residential property located at 921 North Venetian Way, Miami, Miami-Dade County. Although the scope of work proposed by the applicant can be processed administratively as a short form permit application, the owners of the adjacent property to the west, Jorge and Milagros Lopez, have requested a public hearing before the Board (see Attachment F).

The site consists of a single family residence adjacent to Biscayne Bay with one hundred (100) linear feet of shoreline and an L-shaped dock with a boatlift. The previous owners of the subject property obtained Class I permit number CC04-155 for the installation of the existing structures. At the time CC04-155 was issued, Mr. and Mrs. Lopez owned the adjacent property and submitted a letter of consent for the approved work. The applicant intends to remove the existing dock and replace it with a U-shaped dock that will utilize the footprint of the existing dock and extend eastward. The existing boatlift is proposed to remain in its current location and two (2) additional boatlifts will be installed on the U-shaped dock to accommodate a total of three (3) vessels on-site. The applicant has obtained zoning approval from the City of Miami for the proposed structures.

Mr. and Mrs. Lopez have expressed their concerns to DERM about the potential aesthetic and navigational impacts from the proposed structures exceeding the boundaries described in Section D-5(03)(2)(a) of the Miami-Dade County Public Works Manual ("D-5 boundaries"). Although portions of the proposed structures are to be constructed outside of the D-5 boundaries, the Code specifies that other factors contributing to this exceedance shall be

considered, including but not limited to, whether the proposed exceedance is necessary to avoid seagrasses or other valuable environmental resources, or to achieve adequate water depth for the mooring of a vessel. The Code requires that boat slips created by the construction of docks and boatlifts have a minimum water depth of four (4) feet N.O.A.A. mean low water datum. In addition, the Code also specifies that the slip area of the dock or boatlift have adequate water depth for all vessels utilizing this slip area. The proposed dock has been designed to minimize impacts to seagrasses and the proposed structures will extend only the minimum distance from the seawall necessary to obtain the required water depth within the boat slip areas. Furthermore, the Class I permit will require vessels to moor bow-in at the subject property, which will reduce the aesthetic impacts associated with the project while maintaining approximately three hundred (300) linear feet of clearance from the adjacent navigable channel.

Pursuant to the Code, potential adverse environmental impacts and cumulative adverse environmental impacts for a proposed project must be avoided and minimized. To minimize new impacts to resources, including *Halophila johnsonii* (Johnson's seagrass), a Federally Listed Threatened Species, a portion of the proposed dock has been configured to utilize the area previously impacted by the existing structures. In order to mitigate for unavoidable environmental impacts to existing resources, the applicant has agreed to provide a contribution to the Biscayne Bay Environmental Enhancement Trust Fund in the amount of $9,063.00 which shall be specifically designated for habitat creation/restoration projects in Biscayne Bay and its foreshore.

The proposed project has been designed in accordance with all relevant Miami-Dade County coastal construction criteria and is consistent with all other Miami-Dade County coastal protection provisions. Please find attached a DERM Project Report which sets forth the reasons the proposed project is recommended for approval by DERM pursuant to the applicable evaluation factors set forth in Section 24-48.3 of the Code. The conditions, limitations, and restrictions set forth in the Project Report attached hereto are incorporated herein by references hereto.

Attachments

Attachment A: Class I Permit Application
Attachment B: Owner/Agent Letter, Engineer Certification Letter and Project Sketches
Attachment C: Zoning Memorandum
Attachment D: Names and Addresses of Owners of All Riparian or Wetland Property within Three Hundred (300) Feet of the Proposed Work
Attachment E: Aerial Photographs
Attachment F: Letter of Objection
Attachment G: Florida Department of Environmental Protection Consent of Use of Sovereign Submerged Lands
Attachment H: DERM Project Report

NOTICE OF PUBLIC HEARING ON AN APPLICATION BY KEN HILL INVESTMENT GROUP, INC. FOR A CLASS I PERMIT TO INSTALL A DOCK AND TWO (2) BOATLIFTS IN BISCAYNE BAY AT 921 NORTH VENETIAN WAY, MIAMI, MIAMI-DADE COUNTY, FLORIDA

BOARD OF COUNTY COMMISSIONERS
MIAMI-DADE COUNTY, FLORIDA

NOTICE IS HEREBY GIVEN pursuant to Article IV, Division 1 of Chapter 24 of the Code of Miami-Dade County that the Board of County Commissioners of Miami-Dade County will hold and conduct a Public Hearing on a request by Ken Hill Investment Group, Inc. for a Class I permit to install a dock and two (2) boatlifts in Biscayne Bay at 921 North Venetian Way, Miami, Miami-Dade County, Florida. Such Public Hearing will be held on the 19th day of October 2010 at 9:30 AM in the County Commission Chambers on the 2nd Floor of the Stephen P. Clark Center at 111 NW 1st Street in Miami, Florida.

Plans and details concerning the work requested in the application may be reviewed by interested persons at the office of the Miami-Dade County Department of Environmental Resources Management, 6th Floor, 701 NW 1st Court, Miami, Florida 33136.

Oral statements will be heard and appropriate records made. For accuracy of records, all important facts and arguments should be prepared in writing in triplicate, with two copies being submitted to the Deputy Clerk of the County Commission at the hearing or mailed to her beforehand (Diane Collins, Deputy Clerk), 111 NW 1st Street, Stephen P. Clark Center, Suite 17-202, Miami, Florida 33128; and with one copy being submitted beforehand to the Miami-Dade County Department of Environmental Resources Management, 701 NW 1st Court, Miami, Florida 33136.

A person who decides to appeal any decision made by any Board, Agency, or Commission with respect to any matter considered at its meeting or hearing, will need a record of proceedings. Such person may need to ensure that a verbatim record of the proceedings is made, including the testimony and evidence upon which the appeal is to be based.

BOARD OF COUNTY COMMISSIONERS
MIAMI-DADE COUNTY, FLORIDA

HARVEY RUVIN, CLERK

BY: _____
Diane Collins, Deputy Clerk

4

MEMORANDUM

(Revised)

TO: Honorable Chairman Dennis C. Moss and Members, Board of County Commissioners

DATE: October 19, 2010

FROM: R. A. Cuevas, Jr. County Attorney

SUBJECT: Agenda Item No. 5(B)

Please note any items checked.

_____ "3-Day Rule" for committees applicable if raised

_____ 6 weeks required between first reading and public hearing

_____ 4 weeks notification to municipal officials required prior to public hearing

_____ Decreases revenues or increases expenditures without balancing budget

_____ Budget required

_____ Statement of fiscal impact required

_____ Ordinance creating a new board requires detailed County Manager's report for public hearing

✓ No committee review

_____ Applicable legislation requires more than a majority vote (i.e., 2/3's ____, 3/5's ____, unanimous _____) to approve

_____ Current information regarding funding source, index code and available balance, and available capacity (if debt is contemplated) required

5

Approved _____ Mayor
Veto _____
Override _____

Agenda Item No. 5(B)
10-19-10

RESOLUTION NO. R-1045-10

RESOLUTION RELATING TO AN APPLICATION BY KEN HILL INVESTMENT GROUP, INC. FOR A CLASS I PERMIT TO INSTALL A DOCK AND TWO (2) BOATLIFTS IN BISCAYNE BAY AT 921 NORTH VENETIAN WAY, MIAMI, MIAMI-DADE COUNTY, FLORIDA

WHEREAS, this Board desires to accomplish the purposes outlined in the accompanying memorandum, a copy of which is incorporated herein by reference,

NOW, THEREFORE, BE IT RESOLVED BY THE BOARD OF COUNTY COMMISSIONERS OF MIAMI-DADE COUNTY, FLORIDA, that this Board having considered all the applicable factors contained within Section 24-48.3 of the Code of Miami-Dade County, hereby approves the application by Ken Hill Investment Group, Inc. for a Class I permit to install a dock and two (2) boatlifts in Biscayne Bay at 921 North Venetian Way, Miami, Miami-Dade County, Florida subject to the conditions set forth in the memorandum from the Director of the Miami-Dade County Department of Environmental Resources Management, a copy of which is attached hereto and made a part hereof. The issuance of this approval does not relieve the applicant from obtaining all applicable Federal, State, and local permits.

The foregoing resolution was offered by Commissioner **Audrey M. Edmonson**, who moved its adoption. The motion was seconded by Commissioner **Rebeca Sosa** and upon being put to a vote, the vote was as follows:

Dennis C. Moss, Chairman	**aye**		
Jose "Pepe" Diaz, Vice-Chairman	**absent**		
Bruno A. Barreiro	**aye**	Audrey M. Edmonson	**aye**
Carlos A. Gimenez	**aye**	Sally A. Heyman	**absent**
Barbara J. Jordan	**aye**	Joe A. Martinez	**absent**
Dorrin D. Rolle	**aye**	Natacha Seijas	**aye**
Katy Sorenson	**aye**	Rebeca Sosa	**aye**
Sen. Javier D. Souto	**absent**		

The Chairperson thereupon declared the resolution duly passed and adopted this 19th day of October, 2010. This resolution shall become effective ten (10) days after the date of its adoption unless vetoed by the Mayor, and if vetoed, shall become effective only upon an override by this Board.

MIAMI-DADE COUNTY, FLORIDA
BY ITS BOARD OF
COUNTY COMMISSIONERS

HARVEY RUVIN, CLERK

By: **DIANE COLLINS**
Deputy Clerk

Approved by County Attorney as to form and legal sufficiency.

Peter S. Tell

Attachment A

Class I Permit Application

MIAMI-DADE COUNTY

Class I Permit Application

FOR DEPARTMENTAL USE ONLY

Application must be filled out in its entirety. Please indicate N/A for non-applicable fields.

1. Applicant Information:
Name: Ken Hill Investment Group, Inc.
Address: 101 Jim Wright Freeway Suite 200
Fort Worth, TX Zip Code: 76108
Phone #: (817) 368-4834 Fax#:
Email:
* This should be the applicant's information for contact purposes.

2. Applicant's Authorized Permit Agent:
Agent is allowed to process the application, furnish supplemental information relating to the application and bind the applicant to all requirements of the application.
Name: Z-Max Construction, Inc.
Address: 4946 SW 38 Way
Fort Lauderdale, FL Zip Code: 33312
Phone #: (305) 785-8682 Fax #: (954) 467-1241
Email: jamesjamesmjr@aol.com

3. Location where proposed activity exists or will occur (latitude and longitude are only necessary for properties without address or folio #):
Folio #(s): 01-3231-026-0100 Latitude: Longitude:
Street Address: 921 N Venetian Way Section: 31 Township: 53 Range: 42
In City or Town: Miami, FL 33141 Near City or Town:
Name of waterway at location of the activity: Biscayne Bay

4. Describe the proposed activity (check all that apply):

- ☐ Seawall
  - ☐ New/Replacement Seawall
  - ☐ Seawall Cap
  - ☐ Batter Piles
  - ☐ King Piles
  - ☐ Footer/Toe Wall
  - ☐ Riprap
- ☒ Dock(s)
  - ☐ Pier(s)
  - ☐ Viewing Platform
- ☒ Boatlift
  - ☐ Mooring Piles
  - ☐ Fender Piles
  - ☐ Davits
- ☐ Dredging
  - ☐ Maintenance
  - ☐ New
- ☐ Filling
- ☐ Mangrove Trimming
- ☐ Mangrove Removal

☐ Other:

Estimated project cost = $ 100,000.00

Are you seeking an after-the-fact approval (ATF)? ☐ Yes ☒ No If "Yes", describe the ATF work:

5. Proposed Use (check all that apply):

- ☒ Single Family
- ☐ Multi-Family
- ☐ Private
- ☐ Public
- ☐ Commercial
- ☐ Industrial
- ☐ Utility

6. If the proposed work relates to the mooring of vessels provide the following information (please also indicate if the applicant does not have a vessel):
Proposed Vessel Type (s): See Exhibit A
Vessel Make/Model (If known):
Draft (s)(range in inches.): Length (s)(range in feet.):
Total Number of Slips: 3

7. List all permits or certifications that have been applied for or obtained for the above referenced work:

Issuing Agency	Type of Approval	Identification Number	Application Date	Approval Date
DEP/USACOE	TBD	TBD	TBD	TBD

8. Contractor Information (If known):

Name: Z-Max Construction, Inc. License # (County/State): CGC 151 0323

Address: 4946 SW 38 Way Fort Lauderdale, FL Zip Code: 33312

Phone #: (305) 785-8672 Fax #: (954) 467-1241 E-mail: jamesjamesmjr@aol.com

9. IMPORTANT NOTICE TO APPLICANTS: The written consent of the property owner is required for all applications to be considered complete. Your application WILL NOT BE PROCESSED unless the Applicant and Owner Consent portion of the application is completed below. You have the obligation to apprise the Department of any changes to information provided in this application.

Application is hereby made for a Miami-Dade County Class I permit to authorize the activities described herein. I agree to or affirm the following:

- I possess the authority to authorize the proposed activities at the subject property, and
- I am familiar with the information, data and plans contained in this application, and
- To the best of my knowledge and belief, the information, data and plans submitted are true, complete and accurate, and
- I will provide any additional information, evidence or data necessary to provide reasonable assurance that the proposed project will comply with the applicable State and County water quality standards both during construction and after the project is completed, and
- I am authorizing the permit agent listed in Section 2 of this application to process the application, furnish supplemental information relating to this application and bind the applicant to all requirements of this application, and
- I agree to provide access and allow entry to the project site to inspectors and authorized representatives of Miami-Dade County for the purpose of making the preliminary analyses of the site and to monitor permitted activities and adherence to all permit conditions.

A. IF APPLICANT IS AN INDIVIDUAL

Signature of Applicant | Print Applicant's Name | Date

B. IF APPLICANT IS OTHER THAN AN INDIVIDUAL OR NATURAL PERSON
(Examples: Corporation, Partnership, Trust, LLC, LLP, etc.)

Ken Hill Investment Group, Inc.	Corporation	Texas
Print Name of Applicant (Enter the complete name as registered)	Type (Corp, LLC, LLP, etc.)	State of Registration/Incorporation

Under the penalty of perjury, I certify that I have the authority to sign this application on behalf of the Applicant, to bind the Applicant, and if so required to authorize the issuance of a bond on behalf of the Applicant. (If asked, you must provide proof of such authority to the Department). ***Please Note: If additional signatures are required, pursuant to your governing documents, operating agreements, or other applicable agreements or laws, you must attach additional signature pages. ***

Jeff Farris	Jeff Farris	President	8/26/2010
Signature of Authorized Representative	Print Authorized Representative's Name	Title	Date

C. IF APPLICANT IS A JOINT VENTURE Each party must sign below(If more than two members, list on attached page)

Print Name of Applicant (Enter the complete name as registered)	Type (Corp, LLC, LLP, etc.)	State of Registration/Incorporation
Print Name of Applicant (Enter the complete name as registered)	Type (Corp, LLC, LLP, etc.)	State of Registration/Incorporation

Under the penalty of perjury, I certify that I have the authority to sign this application on behalf of the Applicant, to bind the Applicant, and if so required to authorize the issuance of a bond on behalf of the Applicant. (If asked, you must provide proof of such authority to the Department). ***Please Note: If additional signatures are required, pursuant to your governing documents, operating agreements, or other applicable agreements or laws, you must attach additional signature pages. ***

Signature of Authorized Representative	Print Authorized Representative's Name	Title	Date
Signature of Authorized Representative	Print Authorized Representative's Name	Title	Date

10. WRITTEN CONSENT OF THE PROPERTY OWNER OF THE AREA OF THE PROPOSED WORK

I/We are the fee simple owner(s) of the real property located at 921 N Venetian Way Miami, FL 33141 Miami-Dade County, Florida, otherwise identified in the public records of Miami-Dade County as Folio No. 01-3231-026-0100. I am aware and familiar with the contents of this application for a Miami-Dade County Class I Permit to perform the work on or adjacent to the subject property, as described in Section 4 of this application. I possess the riparian rights to the area of the proposed work (if applicable) and hereby consent to the work identified in this Class I Permit application.

A. IF THE OWNER(S) IS AN INDIVIDUAL

Signature of Owner	Print Owner's Name	Date
Signature of Owner	Print Owner's Name	Date

B. IF THE OWNER IS OTHER THAN AN INDIVIDUAL OR NATURAL PERSON
(Examples: Corporation, Partnership, Joint Venture, Trust, LLC, LLP, etc.)

Ken Hill Investment Group, Inc.	Corporation	Texas
Print Name of Owner (Enter the complete name as registered)	Type (Corp, LLC, LLP, etc.)	State of Registration/Incorporation

101 Jim Wright Freeway Suite 200 Fort Worth, TX 76108
Address of Owner

Under the penalty of perjury, I certify that I have the authority to sign this application on behalf of the Owner, to bind the Owner, and if so required to authorize the issuance of a bond on behalf of the Owner. (If asked, you must provide proof of such authority to the Department). ***Please Note: If additional signatures are required, pursuant to your governing documents, operating agreements, or other applicable agreements or laws, you must attach additional signature pages. ***

Signature of Authorized Representative	Print Authorized Representative's Name	Title	Date
Jeff Farris	Jeff Farris	President	8/26/2010
Signature of Authorized Representative	Print Authorized Representative's Name	Title	Date

Please Review Above

Appropriate signature(s) must be included in:

Box 9: either A, B or C

AND

Box 10: either A or B

Exhibit A

Ken Hill Investment Group Inc. Boat Specs

1) 48' Express Fountain
Length 48' 6"
beam 12'
draft 46"

2) 50' Mystic
Length 50' 4"
Beam 12'
draft 4'

3) 27' Racer Hacker Boat
Length 27'
Beam: 6' 6" Beam
Draft: 24" Minimum.

Attachment B

Owner/Agent Letter, Engineer Certification Letter and Project Sketches

PERMIT APPLICANT / AUTHORIZED AGENT STATEMENT

August 18, 2010

Miami-Dade County DERM
Class I Permitting Program
701 NW 1st Court
Miami, FL 33136

RE: CLASS I PERMIT APPLICATION NUMBER 2010-CLI-PER-00041

By the attached Class I Standard Form permit application with supporting documents, I, David Robinson, am the permit applicant / applicant's authorized agent and hereby request permission to perform the work associated with Class I Permit Application 2010-CLI-PER-00041. I understand that a Miami-Dade County Class I Standard Form Permit is required to perform this work.

If approval is granted for the proposed work by the Board of County Commissioners, complete and detailed plans and calculations of the proposed work shall be prepared by an engineer registered/licensed in the State of Florida in accordance with the minimum requirements of Chapter 24 of the Code of Miami-Dade County, Florida. Said plans and calculations shall be subject to the review and approval of the Department of Environmental Resources Management. The permit applicant will secure the services of an engineer registered/licensed in the State of Florida to conduct inspections throughout the construction period, and said engineer shall prepare all required drawings of record. In the event that the proposed work which is the subject of this Class I Permit application involves the cutting or trimming of a mangrove tree(s), a detailed plan of the proposed cutting or trimming shall be prepared by a licensed landscape architect and submitted to the Department for review and approval, and the permit applicant will secure the services of a licensed landscape architect to supervise the trimming or cutting.

Respectfully submitted,

David Robinson, Authorized Agent
President of Z- Max Construction, Inc.

RECEIVED
AUG 31 2010
DERM Coastal Resources Section
Natural Resources Regulation & Restoration
Division (NRRRD)

RECEIVED
AUG 31 2010
DERM Coastal

Edward A.
LANDERS, P.E.
CONSULTING ENGINEERS

ENGINEER LETTER OF CERTIFICATION

August 18, 2010

Miami-Dade County DERM
Class I Permitting Program
701 NW 1st Court
Miami, FL 33136

RECEIVED
AUG 3 1 2010
DERM Coastal Resources Section
Natural Resources Regulation & Restoration
Division (NRRRD)

RE: Class I Permit Application Number 2010-CLI-PER-00041

Ladies and Gentlemen:

This letter will certify that I am an engineer registered/licensed in the State of Florida, qualified by education and experience in the area of construction, and that to the best of my knowledge and belief, the proposed work does not violate any laws of the State of Florida or any provision of the Code of Miami Dade County which may be applicable, that diligence and recognized standard practices of the engineering profession have been exercised in the engineer's design process for the proposed work, and in my opinion based upon my knowledge and belief, the following will not occur:

a. Harmful obstruction or undesirable alteration of the natural flow of the water within the area of the proposed work.

b. Harmful or increased erosion, shoaling of channels or stagnant areas of water. (Not applicable to Class IV permits).

c. Material injury to adjacent property.

d. Adverse environmental impacts from changes in water quality or quantity. (Applicable to Class IV permits only).

Further, I have been retained by the applicant to provide inspections throughout the construction period and to prepare a set of reproducible record prints of drawings showing changes made during the construction process based upon the marked-up prints, drawings, and other data furnished by the contractor to me.

Sincerely,

Edward A. Landers, P.E.
P.E. # 038398

7850 NW 146TH STREET, SUITE 509 * MIAMI LAKES FL 33016 * PHN: (305)823-3938 * FAX: (305)823-9355

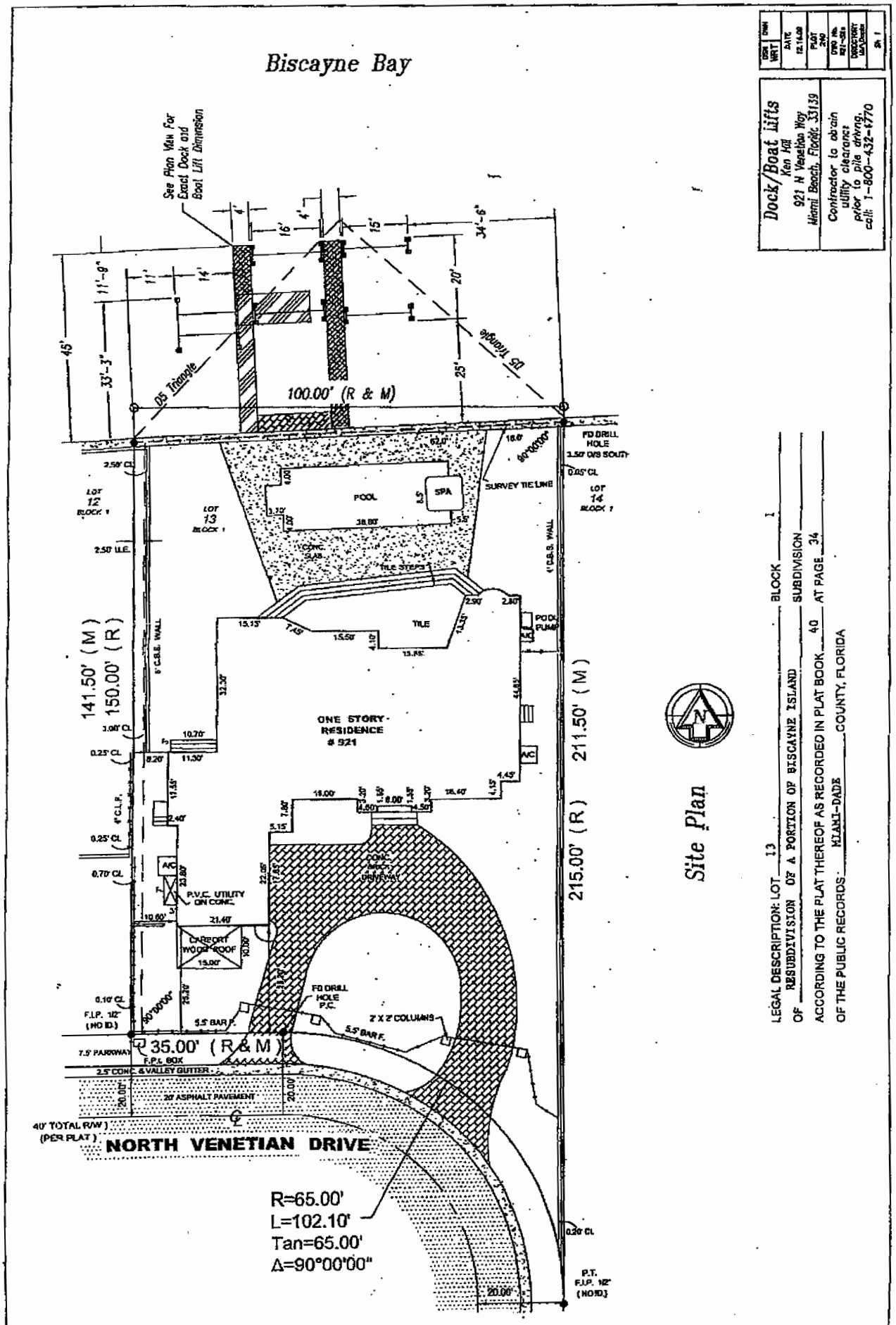
Biscayne Bay
See Plan View For Exact Dock and Boat Lift Dimension
100.00' (R & M)
05 Triangle
05 Triangle
141.50' (M)
150.00' (R)
215.00' (R)
211.50' (M)
POOL
SPA
ONE STORY RESIDENCE # 921
TILE
CONC. SLAB
TILE STEPS
POOL PUMP
SURVEY TIE LINE
FD DRILL HOLE
P.V.C. UTILITY ON CONC.
CARPORT WOOD ROOF
FD DRILL HOLE P.C.
2' X 2' COLUMNS
35.00' (R & M)
7.5' PARKWAY
F.P.L. BOX
2.5' CONC. & VALLEY GUTTER
20' ASPHALT PAVEMENT
40' TOTAL R/W (PER PLAT)
NORTH VENETIAN DRIVE
R=65.00'
L=102.10'
Tan=65.00'
Δ=90°00'00"
P.T. F.I.P. 1/2" (NO ID)
LOT 12 BLOCK 1
LOT 13 BLOCK 1
LOT 14 BLOCK 1
Site Plan
Dock/Boat Lifts
Ken Hall
921 N Venetian Way
Miami Beach, Florida 33139
Contractor to obtain utility clearance prior to pile driving. call: 1-800-432-4770
LEGAL DESCRIPTION: LOT 13 BLOCK 1
OF RESUBDIVISION OF A PORTION OF BISCAYNE ISLAND SUBDIVISION
ACCORDING TO THE PLAT THEREOF AS RECORDED IN PLAT BOOK 40 AT PAGE 34
OF THE PUBLIC RECORDS MIAMI-DADE COUNTY, FLORIDA

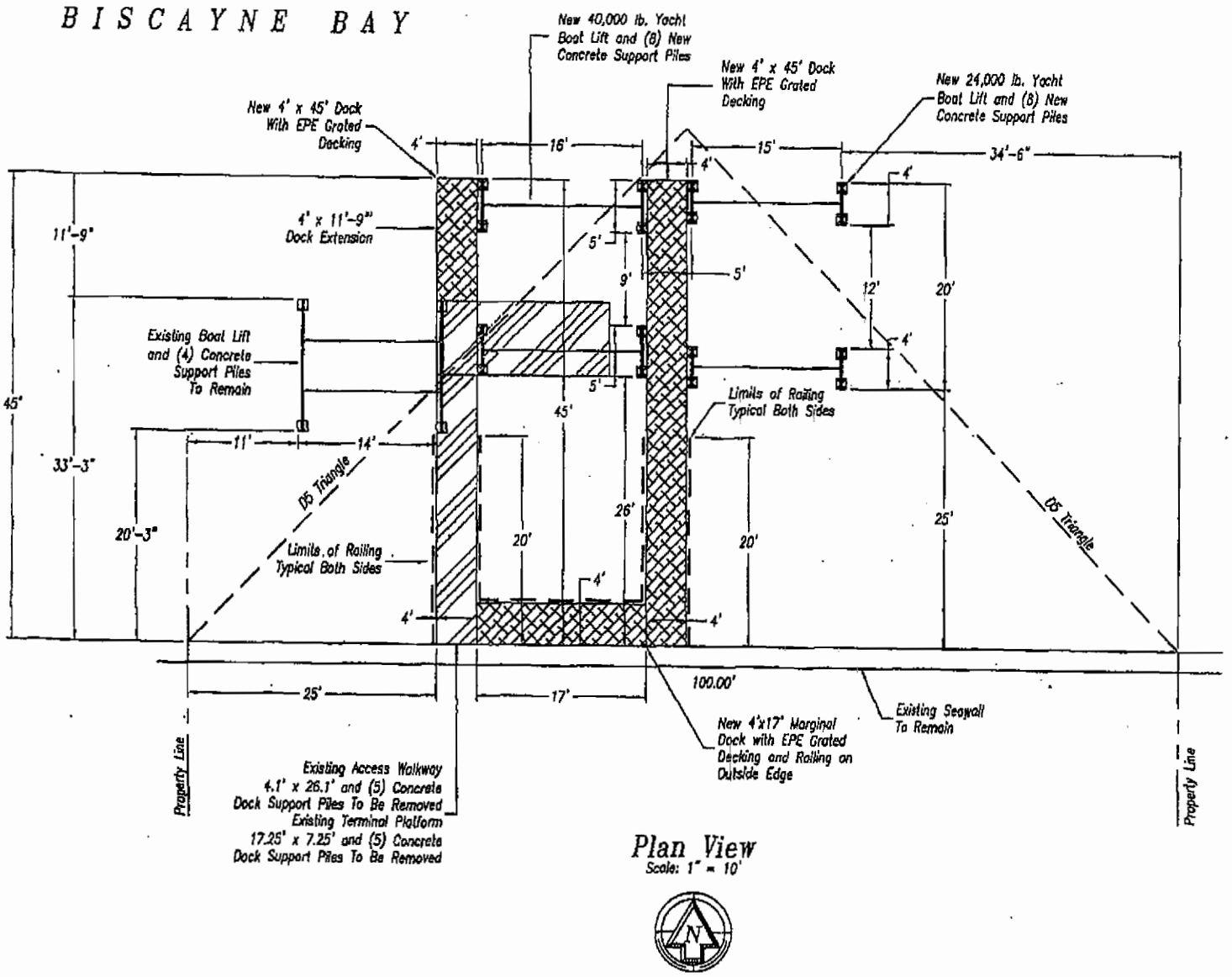

Plan View

Scale: 1" = 10'

Dock/Boat Lifts
Ken Hill
921 N Venetian Way
Miami, Florida 33139

Contractor to obtain utility clearance prior to pile driving. call: 1-800-432-4770

DSN: WRT	CHK:
DATE: 01.11.10	
PLOT: 120	
DWG No. 921 Revised SP	
DIRECTORY: MB\Docks	
Sh. 2	

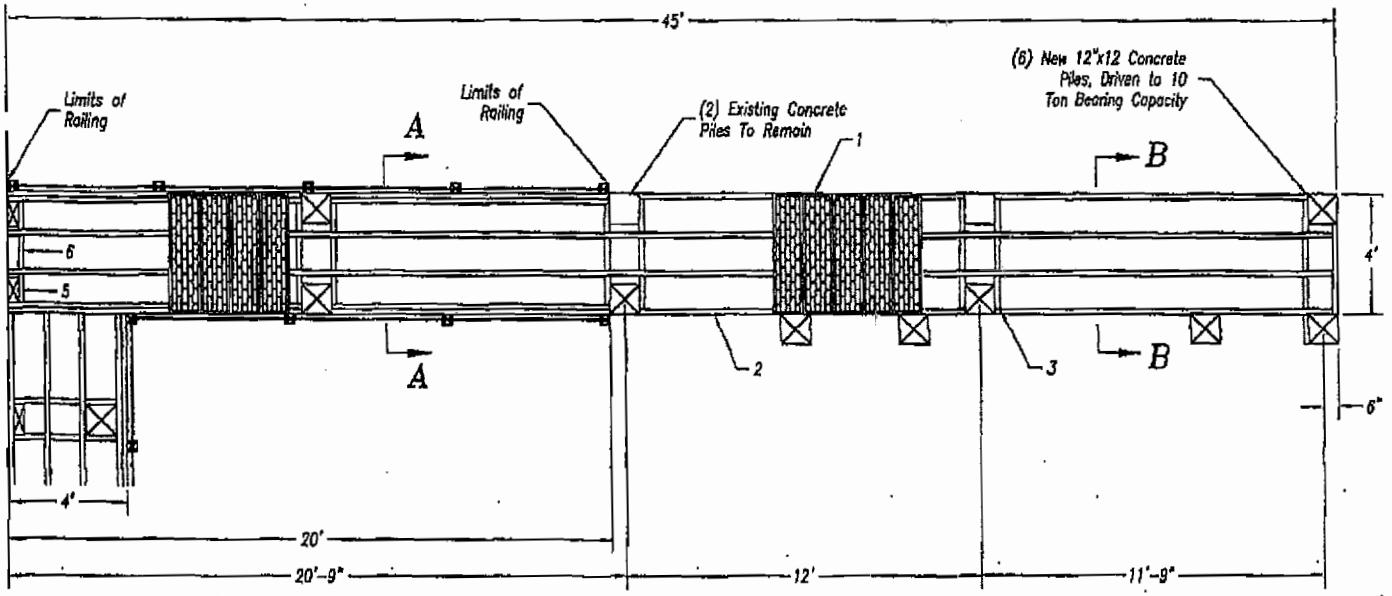

1. Ipe 5/4x1 grated decking with 3/4" spacing with (1) S.S. Wood Screw per stringer.

2. 2x10 stringers @ 16" max spacing.

3. 2x8 substringer with (2) 5/8 x 6 Wedge Anchors @ piles.

4. Hurricane strap Simpson Strong-Tie FL538.1 HTS16 (Galvanized)

5. 4x10 drop hanger with (2) 5/8 x 8 wedge anchors into existing seawall, min. embedment = 4"

6. 2x8 substringer with (2) 5/8 x 8 lag bolts into drop hanger.

Framing Plan (West Pier)

Scale 1/4"= 1'-0"

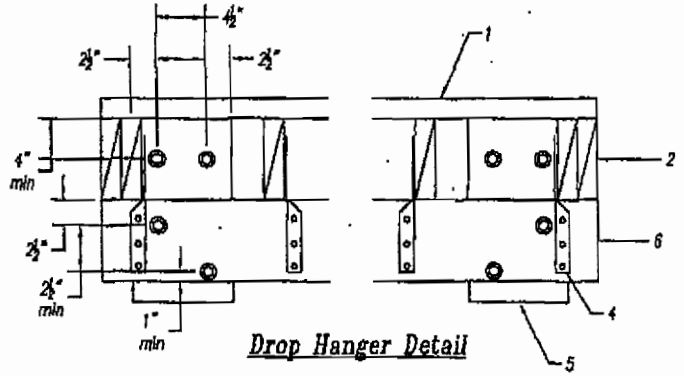

Drop Hanger Detail

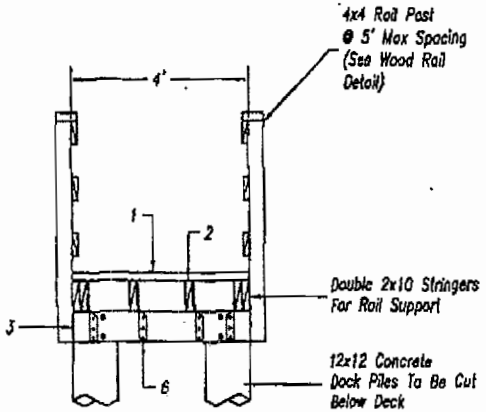

Section A-A

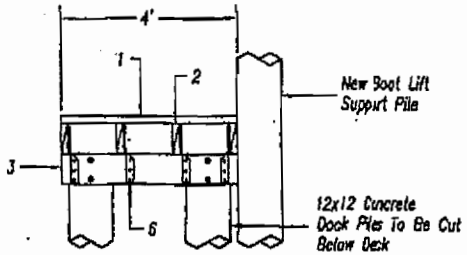

Section B-B

Dock/Boat Lifts
Ken Hill
921 N Venetian Way
Miami Beach, Florida 33139

Contractor to obtain utility clearance prior to pile driving. call: 1-800-432-4770

DSN WRT	DWN
DATE 12.14.08	
PLOT 48	
DWG No. 321-Framing	
DIRECTORY NM\Docks	
Sh 3	

Note:

Existing Rip Rap Boulders To Be Removed By Hand for Installation of New Dock Piles and Then Placed Around New Piles After Installation.

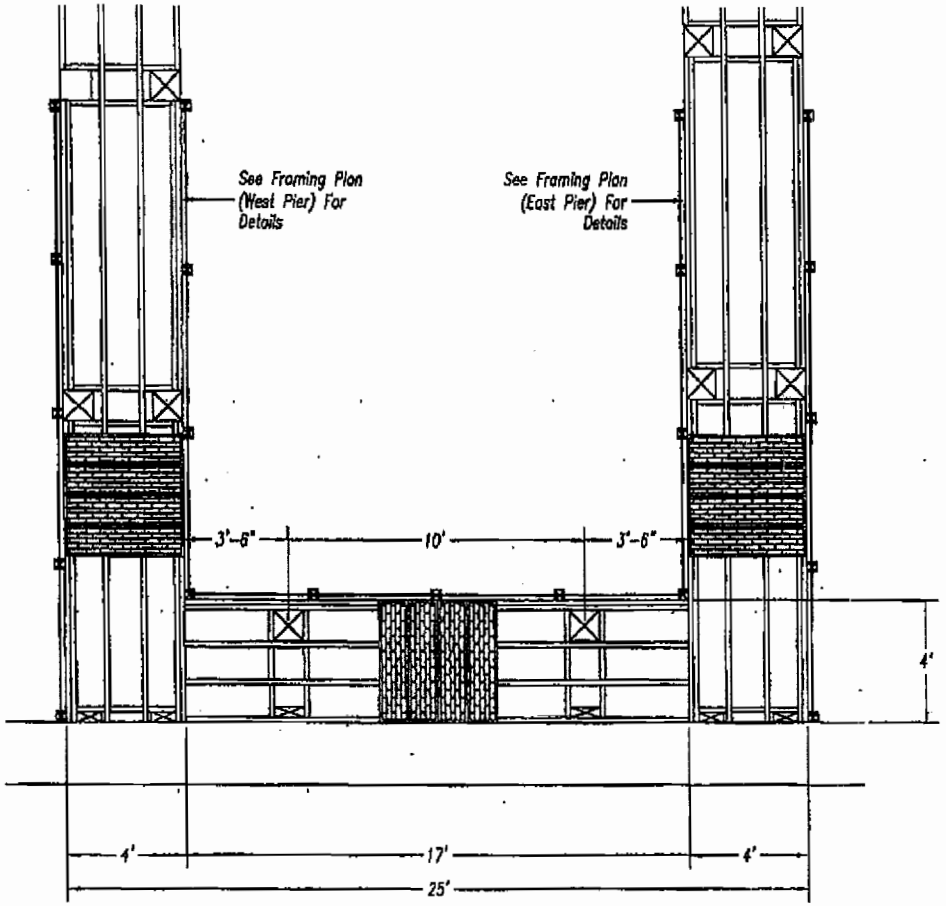

Framing Plan (Marginal Dock)

Scale 1/4"= 1'-0"

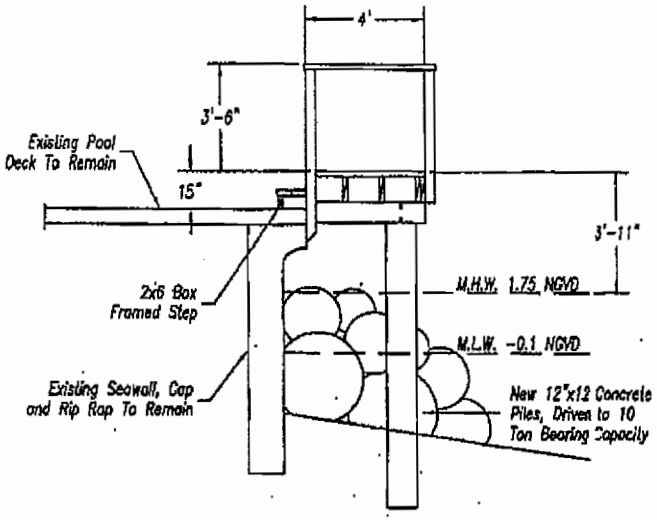

Dock Section (Marginal)

Scale 1/4"= 1'-0"

Dock/Boat Lifts
Ken Hill
921 N Venetian Way
Miami Beach, Florida 33139

Contractor to obtain utility clearance prior to pile driving.
call: 1-800-432-4770

DSN WRT	DWN
DATE 12.14.09	
PLOT 48	
DWG No. 921-Framing	
DIRECTORY MF\Dacon	

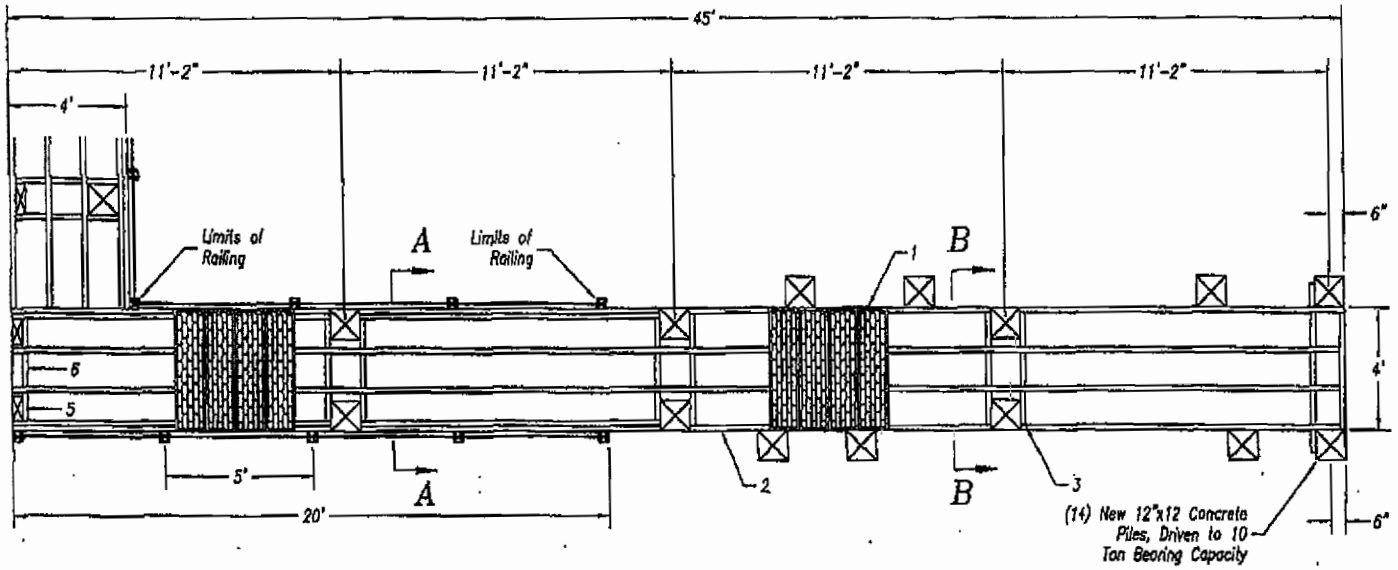

1. Ipe 5/4x1 grated decking with 3/4" spacing with (1) S.S. Wood Screw per stringer.

2. 2x10 stringers @ 16" max spacing.

3. 2x8 substringer with (2) 5/8 x 6 Wedge Anchors @ piles.

4. Hurricane strap Simpson Strong-Tie FL538.1 HTS16 (Galvanized)

5. 4x10 drop hanger with (2) 5/8 x 8 wedge anchors into existing seawall, min. embedment = 4"

6. 2x8 substringer with (2) 5/8 x 8 lag bolts into drop hanger.

Framing Plan (East Pier)

Scale 1/4"= 1'-0"

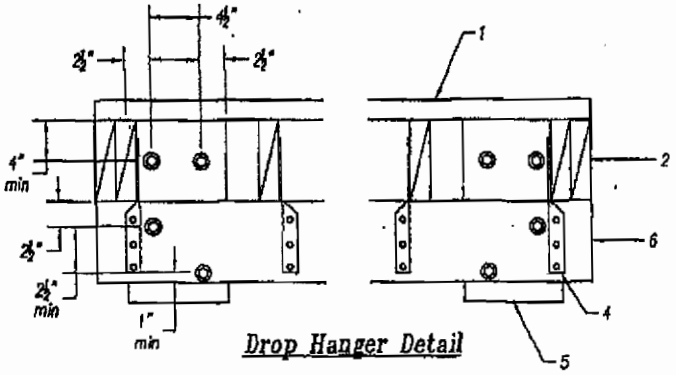

Drop Hanger Detail

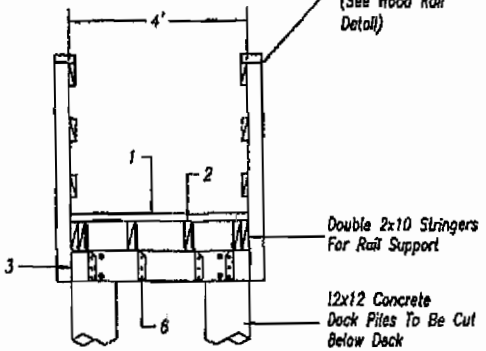

Section A-A

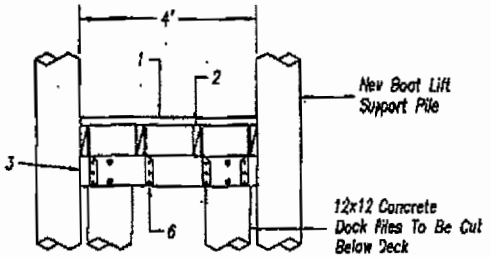

Section B-B

Dock/Boat Lifts	DSN WRT	DWN
Ken Hill 921 N Venetian Way Miami Beach, Florida 33139	DATE 10.14.08	
Contractor to obtain utility clearance prior to pile driving. call: 1-800-432-4770	PLOT as	
	DWG No. 921-Framing	
	DIRECTORY MW\Docks	
	SH. 4	

The construction of the Ipe grate is as follows:

A 1" slot with a ¾" open space 0.75"/1.75=0.429=43%.

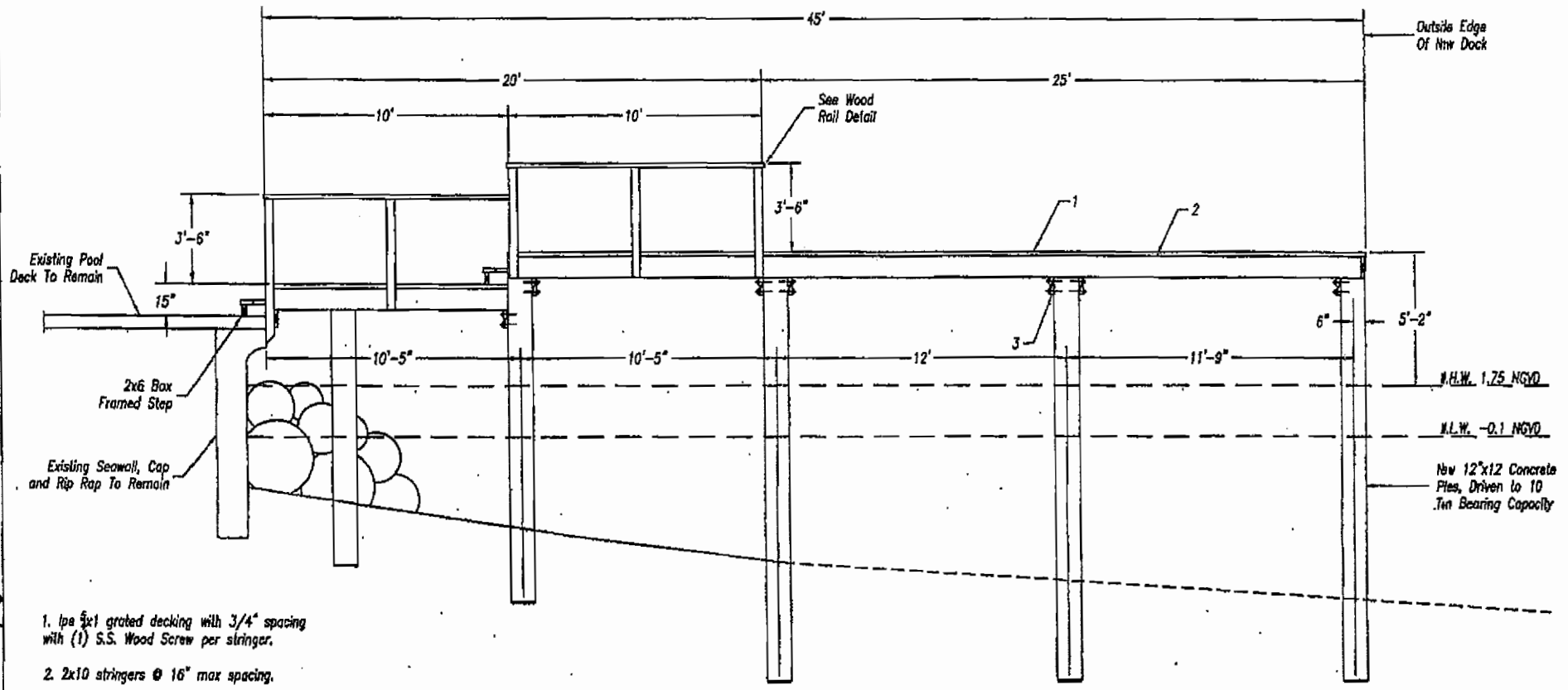

1. Ipe 5/4x1 grated decking with 3/4" spacing with (1) S.S. Wood Screw per stringer.

2. 2x10 stringers @ 16" max spacing.

3. 2x8 substringer with (2) ⅝ x 6 Wedge Anchors @ piles.

4. Hurricane strap Simpson Strong-Tie FL538.1 HTS16 (Galvanized)

5. 4x10 drop hanger with (2) ⅝ x 8 wedge anchors into existing seawall, min. embedment = 4"

6. 2x8 substringer with (2) ⅝ x 8 lag bolts into drop hanger.

Dock Section (West Pier)

Dock/Boat Lifts
Ken Hill
921 N Venetian Way
Miami Beach, Florida 33139

Contractor to obtain utility clearance prior to pile driving. call: 1-800-432-4770

DRN WRT	DRN
DATE	12.14.20
PLOT	48
DWG No.	921-Framing
DIRECTORY	MIADade
Sh #	

The construction of the Ipe grate is as follows:

A 1" slat with a ¾" open space 0.75"/1.75=0.429=43%.

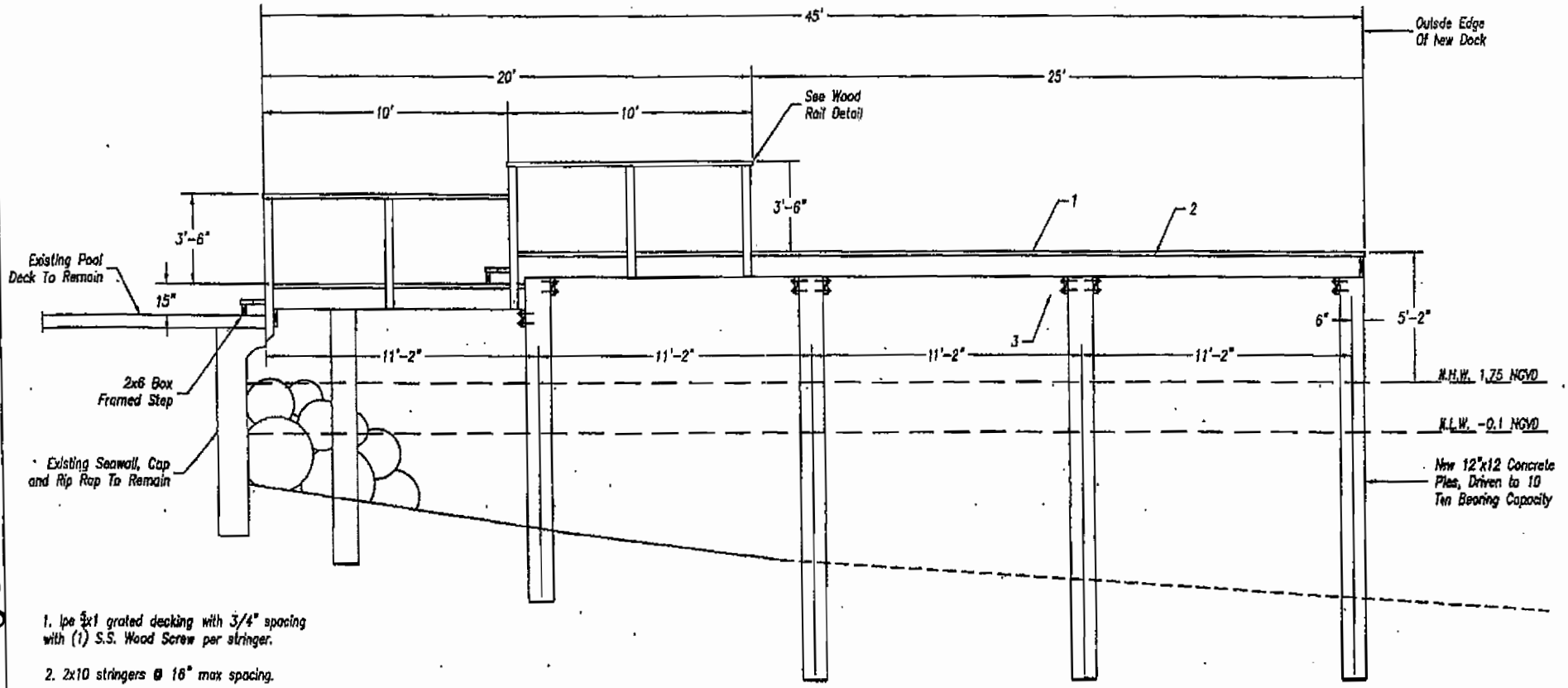

1. Ipe ¾x1 grated decking with 3/4" spacing with (1) S.S. Wood Screw per stringer.

2. 2x10 stringers @ 16" max spacing.

3. 2x8 substringer with (2) ⅝ x 6 Wedge Anchors @ piles.

4. Hurricane strap Simpson Strong-Tie FL538.1 HTS16 (Galvanized)

5. 4x10 drop hanger with (2) ⅝ x 8 wedge anchors into existing seawall, min. embedment = 4"

6. 2x8 substringer with (2) ⅝ x 8 lag bolts into drop hanger.

Dock Section (East Pier)

Dock/Boat Lifts
Ken Hilf
921 N Venetian Way
Miami Beach, Florida 33139

Contractor to obtain utility clearance prior to pile driving. call: 1-800-432-4770

DSN WRT	DWN
DATE	12.16.08
PLOT	48
DWG No.	921-Flooring
DIRECTORY	M:\Docks
Sh #	

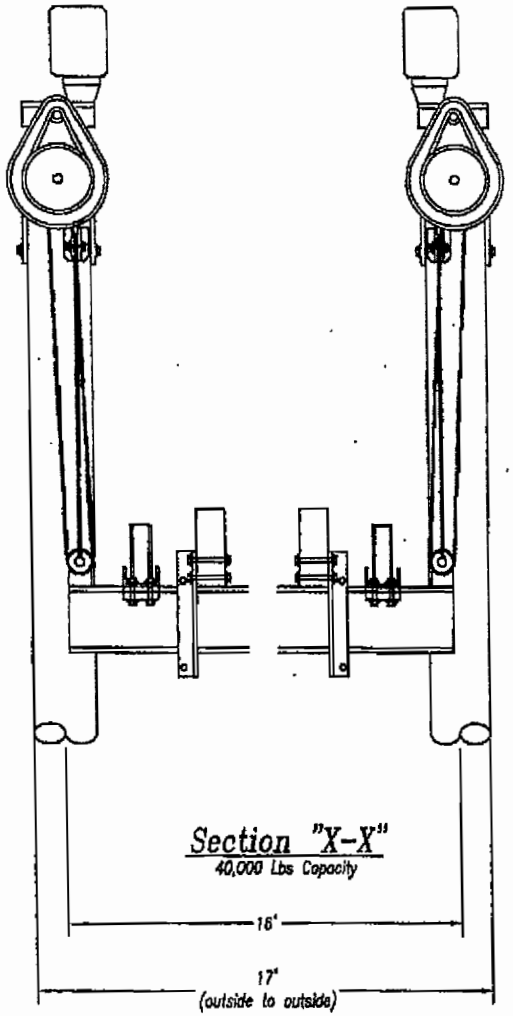

Section "X-X"
40,000 Lbs Capacity

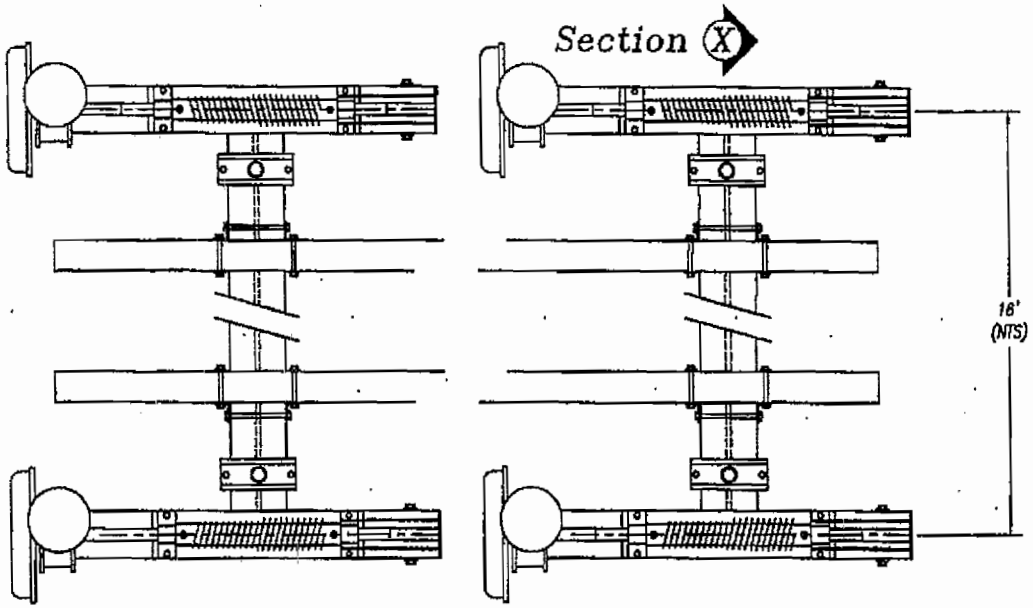

Plan View
40,000 Lbs Capacity

Dock/Boat Lifts
Ken Hill
921 N Venetian Way
Miami Beach, Florida 33139

Contractor to obtain utility clearance prior to pile driving. call: 1-800-432-4770

DSN VRFY	DRWN
DATE	
PLOT	
DWG No.	
SHEET/KEY	
Sh. 7	

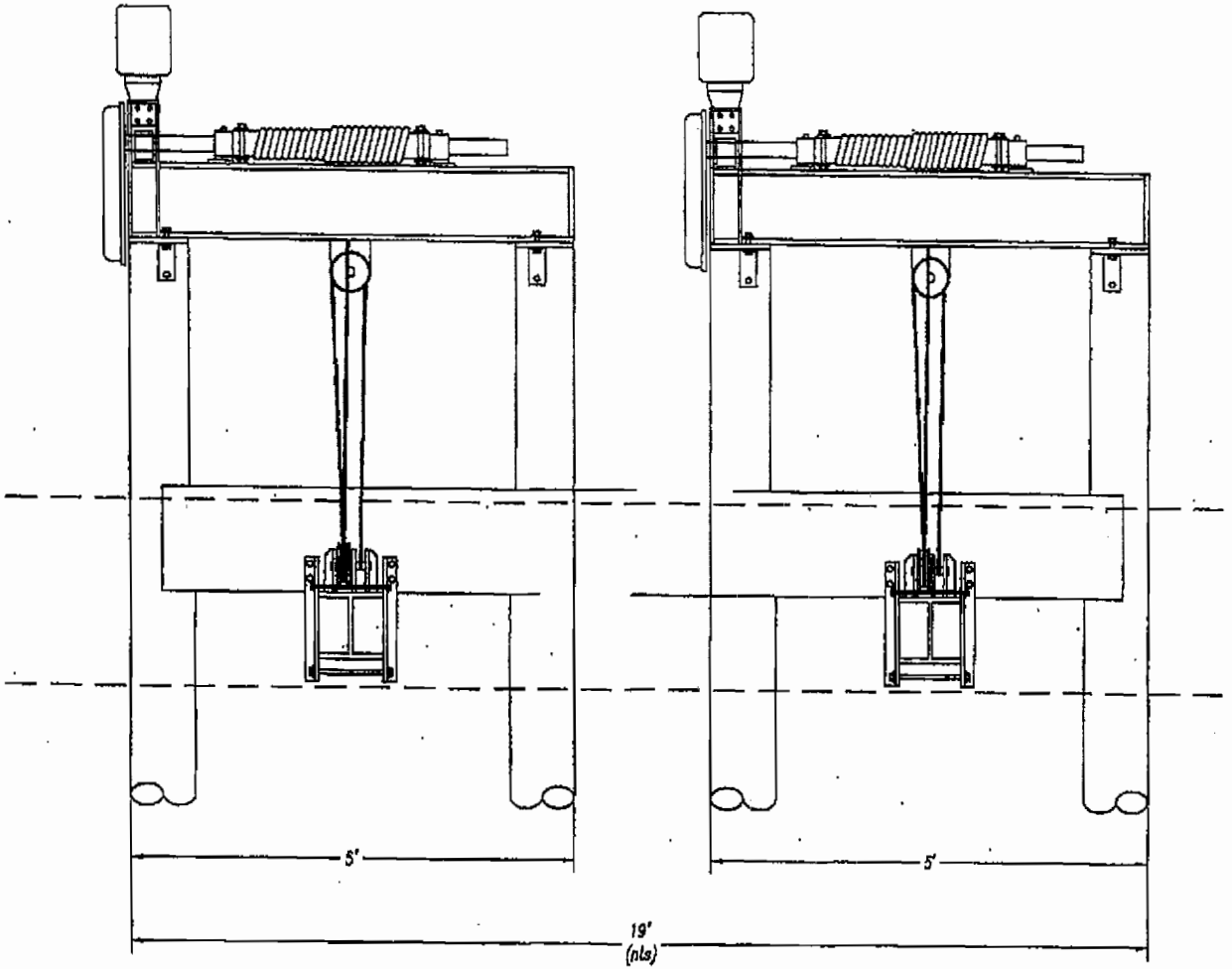

Elevation View

40,000 Lbs Capacity

Dock/Boat lifts
Ken Hill
921 N Venetion Way
Miami Beach, Florida 33139

Contractor to obtain utility clearance prior to pile driving. call: 1-800-432-4770

DRN VRFY	DWH
DATE	12.14.06
PLOT	48
DWG No.	421-Framing
DIRECTORY	MM\Docks
Sh #	

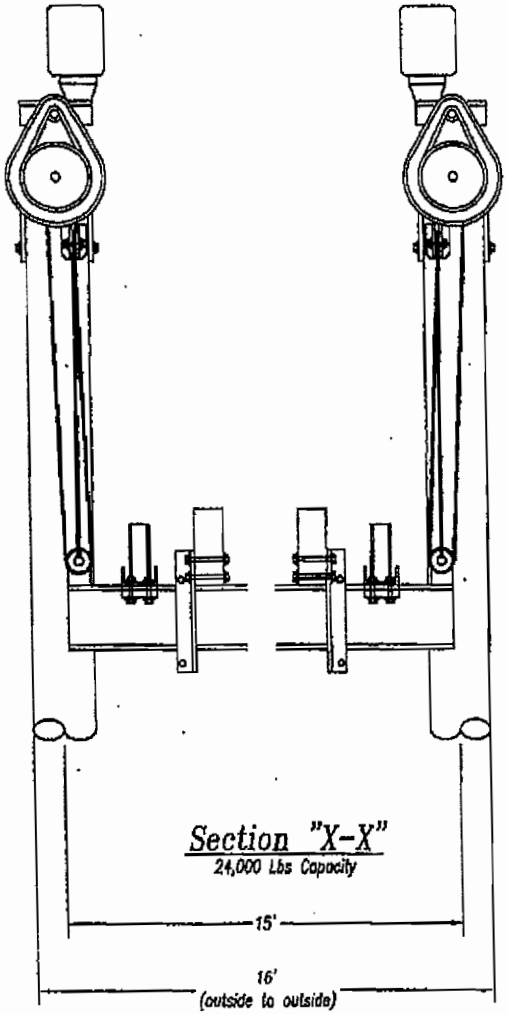

Section "X-X"
24,000 Lbs Capacity

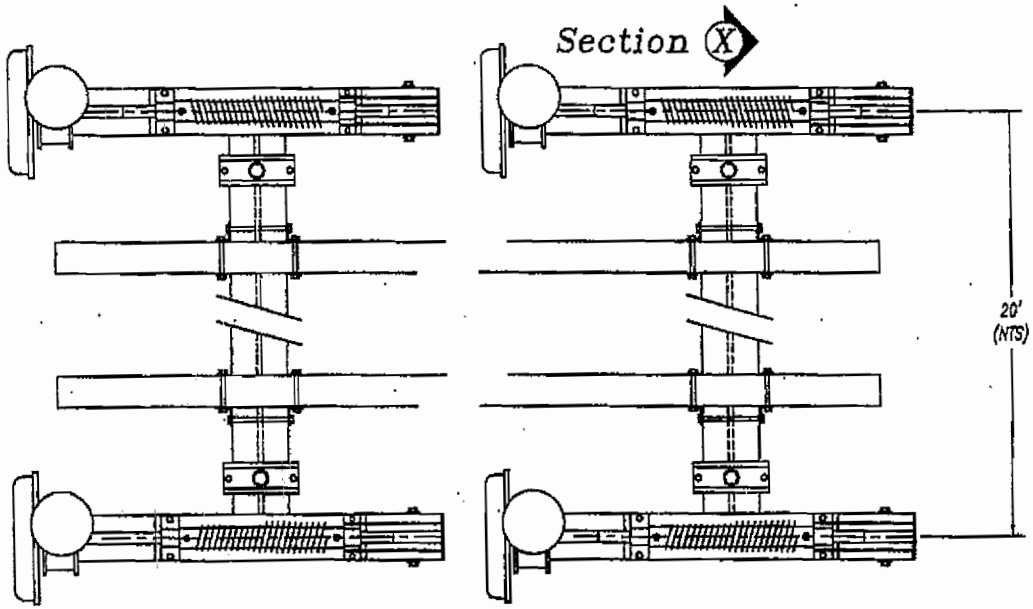

Plan View
24,000 Lbs Capacity

Dock/Boat lifts
Ken Hill
921 N Venetian Way
Miami Beach, Florida 33139

Contractor to obtain utility clearance prior to pile driving, call: 1-800-432-4770

DSN WRT	DWN
DATE 12.14.09	
PLOT 48	
DWG No. 921-Framing	
DIRECTORY	
Sh 9	

25

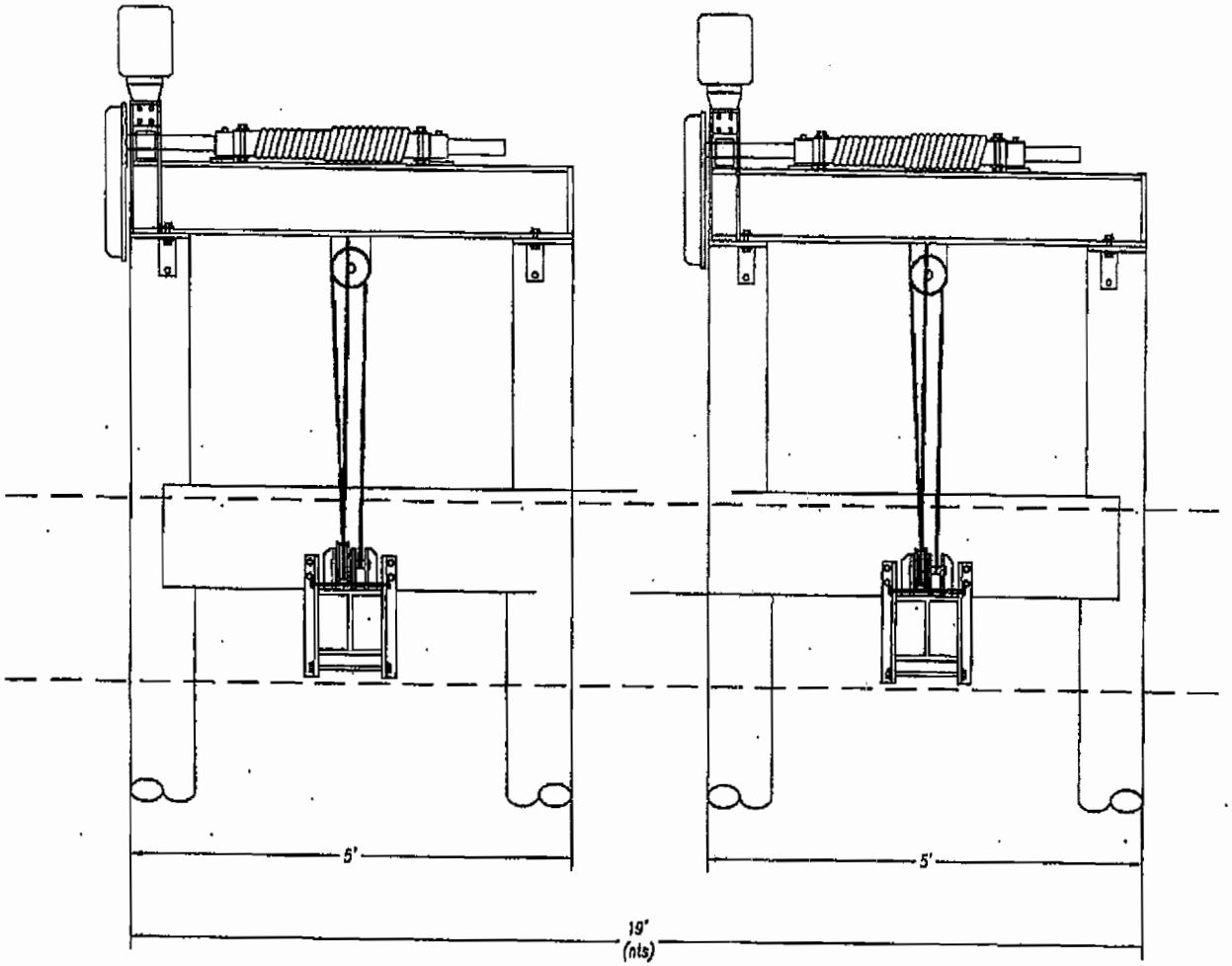

Elevation View

40,000 Lbs Capacity

Dock/Boat Lifts
Ken Hill
921 N Venetian Way
Miami Beach, Florida 33139

Contractor to obtain utility clearance prior to pile driving, call: 1-800-432-4770

DSN WRT	DSN
DATE	
PLOT	
DWG No.	
DIRECTORY	

PILE DRIVING NOTES

1) Pile driving operations shall be observed by a special inspector, including test piles sufficient to determine the approximate length required to meet design capacity.
2) Piles shall be driven using an approved cushion block consisting of material so arranged so as to provide the transmission of the hammer energy.
3) Piles shall be driven to required capacity a minimum of 12 feet into berm.
4) Piles shall be driven with a drop hammer or gravity hammer provided the hammer shall weigh no less than 3000 pounds, and the fall of the hammer shall not exceed six feet.
5) Piles shall be driven with a variation of not more than 1/4 inch per foot from the vertical, or from the batter line indicated, with a maximum variation of the head of the pile from the position shown on the plans of not more than three inches.
6) Where piling must penetrate strata offering high resistance to driving, the structural engineer of record or special inspector may require that the piles be set in pre-drilled or punched holes. The piles shall reach their final penetration by driving.

CONCRETE PILE NOTE

1) Prestressed concrete piles: 12x12 with (4) lo lax 7/16"ø strands, fc'= 6000 min' length = 20'.

STRUCTURAL TIMBER NOTES

1) All structural framing shall be #2 Grade, pressure treated Southern Pine.

GENERAL NOTES:

1) Construction to follow Florida Building Code 2007 edition and amendments as applicable and all Local, State, and Federal Laws.
2) Licensed Contractor shall verify the existing conditions prior to commencement of the work. Any conflicts or omissions between existing conditions or the various elements of the working drawings shall be brought to the attention of the Engineer prior to the commencement of the work. The Licensed Contractor and all sub-contractors are responsible for all lines, elevations, and measurements in connection with their work.
3) Do not scale drawings for dimensions.
4) Any deviation and/or substitution from the information provided herein shall be submitted to the Engineer for their approval prior to commencement of work.
5) All unanticipated or unforeseen demolition and/or new construction conditions which require deviation from the plans and notes herein shall be reported to the Engineer prior to commencement of work.
6) All new work and/or materials shall conform to all requirements of each administrative body having jurisdiction in each pertaining circumstance.
7) All new materials and/or patchwork shall be provided to match existing materials and/or adjoining work where practical except as specifically noted herein.
8) Licensed Contactor to shall use all possible care to protect all existing materials, surfaces, and furnishings from damage during all phases of construction.
9) Licensed Contractor to verify location of existing utilities prior to commencing work.
10) The Licensed contractor to install and remove all shoring and bracing as required for the proper execution of the work.
11) Licensed Contractor to obtain all permits as necessary from all Local, State, and Federal agencies.

General Note:

All materials to be pressure treated pine. (unless otherwise noted).

All frame work materials to be grade #2.

All Decking materials to be grade #1. (unless otherwise noted).

All hardware to be Stainless Steel. (unless otherwise noted).

Design in accordance with 2007 edition of the Florida Building Code (2009 supplement).

Elevations shown hereon are based on the National Geodetic Vertical Datum of 1929.

Approved contractor to determine the suitability of existing structures and verify all dimensions, the approved contractor is responsible for all methods, means, sequences and procedures of work.

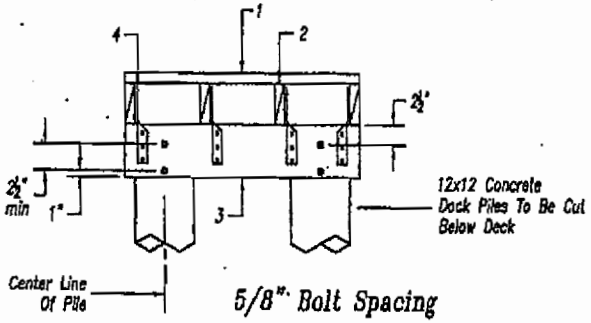

5/8" Bolt Spacing

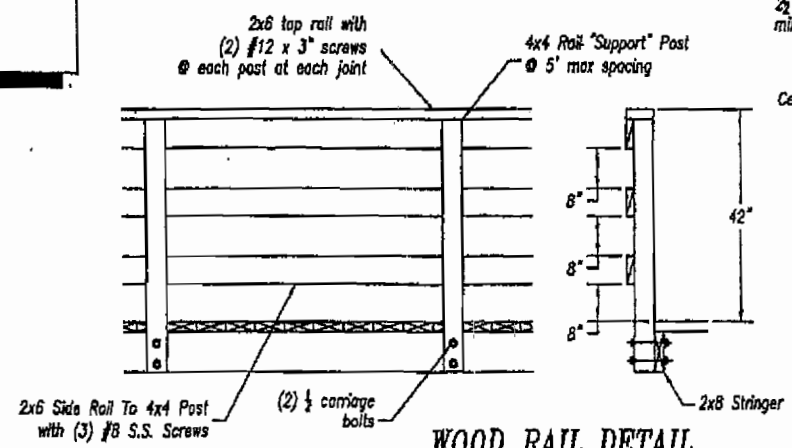

WOOD RAIL DETAIL

Dock/Boat Lifts
Ken Hill
921 N Venetian Way
Miami Beach, Florida 33139

Contractor to obtain utility clearance prior to pile driving. call: 1-800-432-4770

DSN WRY | DWN
DATE 12.14.09
PLOT 48
DWG No. 921-Framing
DIRECTORY MA\Docks
Sh 11

Attachment C

Zoning Memorandum

Memorandum

MIAMI-DADE COUNTY

Date: August 20, 2010

To: Lisa Spadafina, Manager
Coastal Resources Section
Environmental Resources Management

From: Martha Fundora, Biologist I
Coastal Resources Section
Environmental Resources Management

Subject: Class I Permit Application by Ken Hill Investment Group, Inc. to Install a Dock and Two (2) Boatlifts in Biscayne Bay at 921 North Venetian Way, Miami, Miami-Dade County, Florida.

Pursuant to Section 24-48.2(II)(A)(7), of the Code of Miami-Dade County, Florida, a substantiating letter shall be submitted stating that the proposed project does not violate any zoning laws. Said letter will be submitted after the approval by the Board of County Commissioners and prior to the issuance of a Class I permit. The applicant has obtained zoning approval from the City of Miami for the proposed structures.

Attachment D

Names and Addresses of Owners of All Riparian Property within Three Hundred (300) Feet of the Proposed Work

MANUEL A GONZALEZ
881 N VENETIAN DR
MIAMI FL 33139-1012

JUAN CARLOS PAGAN
910 N VENETIAN DR
MIAMI FL 33139-1015

PEDRO N CALAFELL
891 N VENETIAN DR
MIAMI FL 33139-1012

ALAN TACHER &W
ANDREA S LOIS
900 N VENETIAN DR
MIAMI FL 33139

JOHN A HARALAMBIDES &W
ADIS
901 N VENETIAN DR
MIAMI FL 33139-1014

BIMAL RAI
890 N VENETIAN DR
MIAMI FL 33139-1013

JORGE L LOPEZ &W
MILAGROS C LOPEZ
911 N VENETIAN DR
MIAMI FL 33139-1014

BIMAL RAI
880 N VENETIAN DR
MIAMI FL 33139-1013

CARLOS M SANCHEZ &W
GLORIAMALIA
943 N VENETIAN DR
MIAMI FL 33139-1014

LISELOTTE LEATON
941 N VENETIAN DR
MIAMI FL 33139-1014

MADISON KENT KARLOCK
995 N VENETIAN DR
MIAMI FL 33139-1014

KENNETH M GORDON &W
IVONNE H
950 N VENETIAN DR
MIAMI FL 33139-1015

PATRICK A CUMMINS
940 N VENETIAN DR
MIAMI FL 33139-1015

ANDRIA O RIVERO
920 N VENETIAN DR
MIAMI FL 33139-1015

Attachment E

Aerial Photographs

921 North Venetian Way Channel Markers

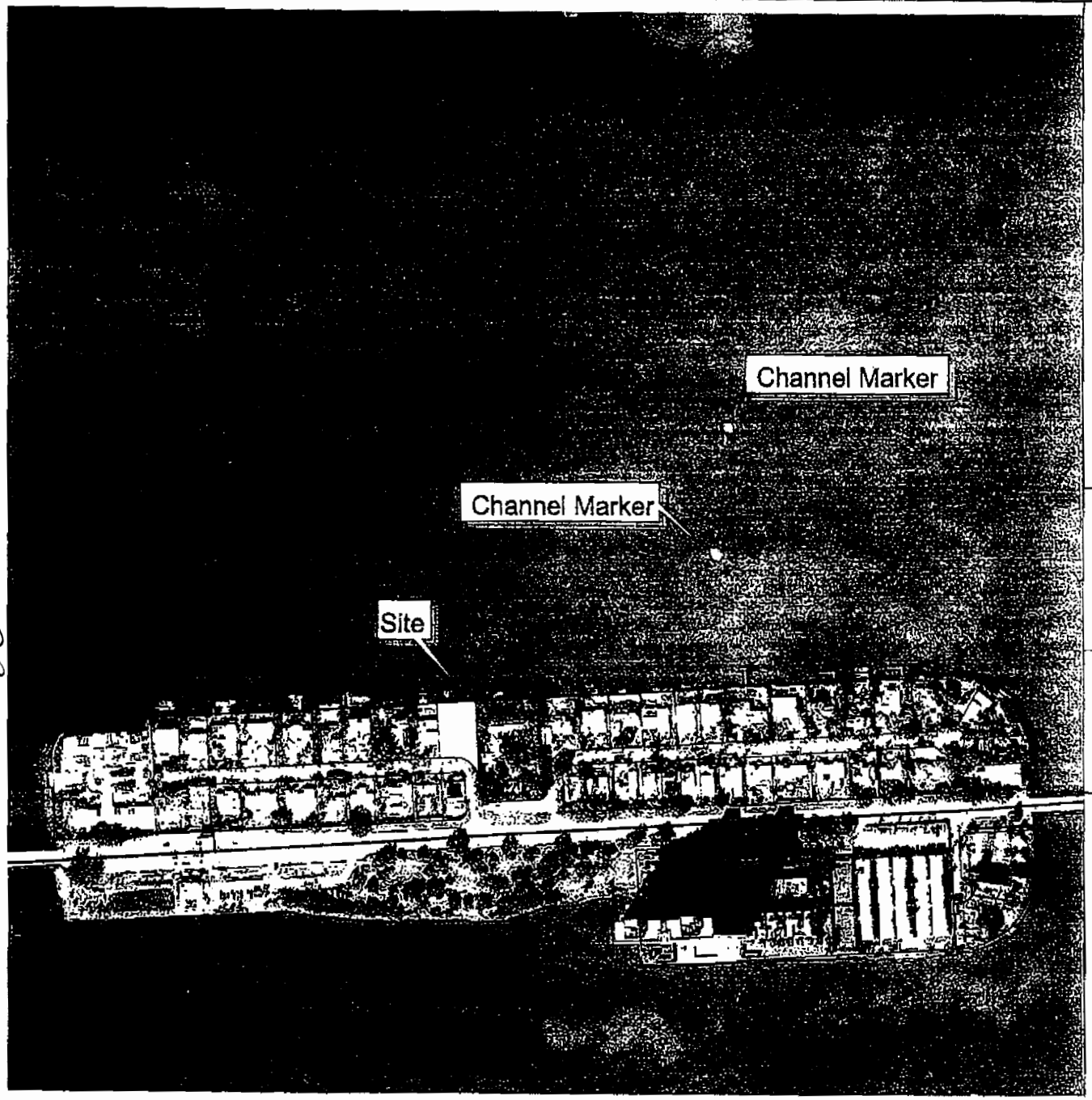

N

COPYRIGHT NOTICE AND DISCLAIMER

COPYRIGHT [illegible]

NO [illegible] MERCHANTABILITY OR FITNESS FOR A PARTICULAR PURPOSE [illegible]

SCALE: 1 inch = 391.64 Feet

33

Applicant
Lopez Property

Attachment F

Letter of Objection

Spadafina, Lisa (DERM)

From: milylopez1@aol.com
Sent: Friday, July 02, 2010 10:02 AM
To: Spadafina, Lisa (DERM)
Subject: Re: Class 1 Permit 2010-CLI-PER-00041 located at 921 N Venetian Way

Good Morning,

Our opposition to Class I permit applications 2009-CLI-PER-00366 and 2010-CLI-PER-00041 are for the following reasons:

1) Safety and hazardous concerns of how far (over 45FT lift structure plus the boat body) the dock is going into the waterway -- so close to the channel and navigating route boaters use in this area. Boat lift shows as a 40,000LBS lift - that is a big boat so it will sit fart outside of the lift.

2) Intrusion into the D5 triangle/boundaries - as I explained the previous owner was granted permission to go outside the D5 triangle/boundaries
and after seeing how much of the our view it blocks, we are not consenting to any more outside boundaries intrusions. Wee have not given any letter of consent to for this property for the additional work outside the boundaries and we per code subject property owners need to obtain letter of consent from adjoining riparian owners, seeMDC codes:

Class I permit applications proposing to exceed the boundaries described in Section D-5(03)(2)(a) of the Miami-Dade County Public Works Manual, the following additional factors shall be considered:
Sec. 24-48.3. - Factors for evaluation of permit applications; incomplete permit applications.
(i)Whether the proposed exceedance is the minimum necessary, as determined by the Director or the Director's designee, to avoid seagrass or other valuable environmental resources,
(ii)Whether the proposed exceedance is the minimum necessary, as determined by the Director or the Director's designee, to achieve adequate water depth for mooring of a vessel,
(iii)Whether the applicant has provided to the Department notarized letter(s) of consent from adjoining riparian property owners in a form prescribed by the Director or the Director's designee, and
(iv)Whether the Department has received any letter of objection from adjoining riparian property owners.

3) Concern about the lack of seagrass on the west side of the subject property --- why is this area the only side and not the other eastern side? Could it be the canvas covers/shades the area too much and it has killed the seagrass?

4)We believe that the structure and blue canvas put on top of the existing boat lift is not permitted or allowed by codes.

Questions:

a) Is Class I Permit Application 2009-CLI-PER-00366 expired and why was other Class I Permit Application 2010-CLI-PER 00041 issued? And is what stage of the process is 2010-CLI -PER 00041 at?

b) Is the stamp in red on the plans an approval or final approval from DERM to the proposed work or is it a stamp of submittal of plans to DERM?

Please let us know what are the steps for requesting to be heard at a public hearing before the Board of County Commissioners per DERM code pursuant to Section 24-48.2(I)(B)(1) of the Code of Miami-Dade County. And if this written letter/transmittal an acceptable official form for requesting the above code.

In addition we would like a copy of the original dock permit and letter of consent signed by us for the existing dock.

Thanks,

Jorge and Mily Lopez
911 North Venetian Drive
Miami, FL 33139
305-607-5650
milylopez1@aol.com

Attachment G

Florida Department of Environmental Protection
Consent of Use of Sovereign Submerged Lands

Jack Long, Director
Southeast District Office
MAR 0 3 2010

Florida Department of Environmental Protection

Southeast District Office
400 N. Congress Avenue, Suite 200
West Palm Beach, FL 33401
(561) 681-6600

Charlie Crist
Governor

Jeff Kottkamp
Lt. Governor

Michael W. Sole
Secretary

Ken Hill
921 N. Venetian Way
Miami, FL 33139

Re: File No.: 13-0298710-001
File Name: Hill, Ken

Dear Mr. Hill:

On December 16, 2009, we received your application and on February 2, 2010, your application was complete for an exemption to perform the following activities: (1) replace an existing dock with an irregular shaped 428 ft^2 dock, consisting of two 4-ft. x 45-ft. (360 ft^2) finger piers, connected by a 4-ft. x 17-ft. (68 ft^2) marginal dock, all of which shall have grated decking and (2) install two boat lifts. The project is located in Biscayne Bay, within the Biscayne Bay Aquatic Preserve, Class III Waters, Outstanding Florida Waters, adjacent to 921 N. Venetian Way, Miami (Section 31, Township 53 South, Range 42 East), in Miami-Dade County (Latitude N 25° 47' 27.90", Longitude W 80° 10' 34.44").

Your application has been reviewed to determine whether it qualifies for any of three kinds of authorization that may be necessary for work in wetlands or waters of the United States. The kinds of authorization are (1) regulatory authorization, (2) proprietary authorization (related to state-owned submerged lands), and (3) federal authorization. The authority for review and the outcomes of the reviews are listed below. Please read each section carefully. Your project **may not** have qualified for all three forms of authorization. If your project did not qualify for one or more of the authorizations, refer to the specific section dealing with that authorization for advice on how to obtain it.

1. **Regulatory Review. –VERIFIED**

The Department has the authority to review your project under Part IV of Chapter 373, Florida Statutes (F.S.), Title 62, Florida Administrative Code (F.A.C.), and in accordance with operating agreements executed between the Department and the water management districts, as referenced in Chapter 62-113, F.A.C.

Based on the information you submitted, we have determined that your project to replace an existing dock with an irregular shaped 428 ft^2 dock, consisting of two 4-ft. x 45-ft. (360 ft^2) finger piers and a connecting 4-ft. x 17-ft. (68 ft^2) marginal dock, all of which shall have grated decking and to install two boat lifts is exempt from the need to obtain a DEP Environmental Resource Permit under Rule 40E-4.051(3)(b), F.A.C.

2. **Proprietary Review. –GRANTED**

The Department acts as staff to the Board of Trustees of the Internal Improvement Trust Fund (Board of Trustees) and issues certain authorizations for the use of sovereignty submerged lands. The Department has the authority to review your project under Chapters 253 and 258, F.S., and 18-21, F.A.C., and Section 62-343.075, F.A.C.

Your project will occur on sovereignty submerged land and will require authorization from the Board of Trustees to use public property. As staff to the Board of Trustees, we have reviewed the proposed project and have determined that, as long as it is located within the described boundaries and is consistent with the attached general consent conditions, the project qualifies for a letter of consent to use sovereignty submerged lands. Therefore, pursuant to Chapter 253.77, Florida Statutes, you may consider this letter as authorization from the Board of Trustees to perform the project.

3. **Federal Review (SPGP). –NOT GRANTED**
Federal authorization for the proposed project is reviewed by DEP pursuant to an agreement between the Department and the U.S. Army Corps of Engineers (Corps). The agreement is outlined in a document titled *Coordination Agreement Between the U.S. Army Corps of Engineers and the Florida Department of Environmental Protection State Programmatic General Permit, Section 10 of the Rivers and Harbor Act of 1899 and Section 404 of the Clean Water Act.*

Your projects have been reviewed for compliance with a State Programmatic General Permit (SPGP). As shown on the attached drawings, the proposed projects are not consistent with the SPGP program. A copy of your application has been sent to the Corps who may require a separate permit. Failure to obtain their authorization prior to construction could subject you to enforcement action. For further information, contact the Corps directly at (305) 526-7181.

This exemption verification is based on the information you provided the Department and the statutes and rules in effect when the information was submitted. This verification will expire after one year, and will not be valid at any other time if site conditions materially change, the project design is modified, or the statutes or rules governing the exempt activity are amended. However, the activity may still be conducted without further notification to or verification from the Department after the one-year expiration of this verification, provided: 1) the project design does not change; 2) site conditions do not materially change; and 3) there are no changes to the statutes or rules governing the exempt activity. In the event you need to re-verify the exempt status for the activity after the one-year expiration of this verification, a new application and verification fee will be required. Any substantial modifications to the project design should be submitted to the Department for review, as changes may result in a permit being required. Conditions of compliance with the regulatory exemption are contained in Attachment A.

This letter does not relieve you from the responsibility of obtaining other permits (federal, state, or local) that may be required for the project.

NOTICE OF RIGHTS OF SUBSTANTIALLY AFFECTED PERSONS

This letter acknowledges that the proposed activity is exempt from ERP permitting requirements under Rule 40E-4.051(3)(b), F.A.C. This determination is final and effective on the date filed with the Clerk of the Department unless a sufficient petition for an administrative hearing is timely filed under sections 120.569 and 120.57 of the Florida Statutes as provided below. If a sufficient petition for an administrative hearing is timely filed, this determination automatically becomes only proposed agency action subject to the result of the administrative review process. Therefore, on the filing of a timely and sufficient petition, this action will not be final and effective until further order of the Department. The procedures for petitioning for a hearing are set forth in the attached notice.

This determination is based on the information you provided the Department and the statutes and rules in effect when the application was submitted and is effective only for the specific activity proposed. This determination shall automatically expire if site conditions materially change or the governing statutes or rules are amended. In addition, any substantial modifications in your plans should be submitted to the Department for review, as changes may result in a permit being required. In any event, this determination shall expire after one year.

Be advised that your neighbors and other parties who may be substantially affected by the proposed activity allowed under this determination of exemption have a right to request an administrative hearing on the Department's decision that the proposed activity qualifies for this exemption. Because the administrative hearing process is designed to redetermine final agency action on the application, the filing of a petition for an administrative hearing may result in a final determination that the proposed activity is not authorized under the exemption established under Rule 40E-4.051(3)(b), F.A.C.

The Department will not publish notice of this determination. Publication of this notice by you is optional and is not required for you to proceed. However, in the event that an administrative hearing is held and the Department's

determination is reversed, proceeding with the proposed activity before the time period for requesting an administrative hearing has expired would mean that the activity was conducted without the required permit.

If you wish to limit the time within which all substantially affected persons may request an administrative hearing, you may elect to publish, at your own expense, the enclosed notice (Attachment A) in the legal advertisement section of a newspaper of general circulation in the county where the activity is to take place. A single publication will suffice.

If you wish to limit the time within which any specific person(s) may request an administrative hearing, you may provide such person(s), by certified mail, a copy of this determination, including Attachment A.

For the purposes of publication, a newspaper of general circulation means a newspaper meeting the requirements of sections 50.011 and 50.031 of the Florida Statutes. In the event you do publish this notice, within seven days of publication, you must provide to the following address proof of publication issued by the newspaper as provided in section 50.051 of the Florida Statutes. If you provide direct written notice to any person as noted above, you must provide to the following address a copy of the direct written notice.

Florida Department of Environmental Protection
Southeast District
Submerged Lands and Environmental Resources Program
400 North Congress Avenue, Suite 200
West Palm Beach, Florida 33401

If you have any questions, please contact Jena Sansgaard at (561) 681-6655 or by email at Jena.Sansgaard@dep.state.fl.us. When referring to your project, please use the FDEP file name and number listed above.

Sincerely,

3/3/10

for Jennifer K. Smith Date
Environmental Administrator
Submerged Lands and Environmental Resources Program

Enclosures

cc: Alberto Gonzalez USACOE Miami, Alberto.Gonzalez@usace.army.mil
James McKenzie, Z Max Construction, JamesJamesMJR@aol.com

FILING AND ACKNOWLEDGMENT

FILED, on this date, pursuant to 120.52(9), Florida Statutes, with the designated Department Clerk, receipt of which is hereby acknowledged.

3/3/10

Clerk Date

GENERAL CONSENT CONDITIONS:

(1) Authorizations are valid only for the specified activity or use. Any unauthorized deviation from the specified activity or use and the conditions for undertaking that activity or use shall constitute a violation. Violation of the authorization shall result in suspension or revocation of the grantee's use of the sovereignty submerged land unless cured to the satisfaction of the Board.

(2) Authorizations convey no title to sovereignty submerged land or water column, nor do they constitute recognition or acknowledgment of any other person's title to such land or water.

(3) Authorizations may be modified, suspended or revoked in accordance with their terms or the remedies provided in Sections 253.04 and 258.46, F.S., or Chapter 18-14, F.A.C.

(4) Structures or activities shall be constructed and used to avoid or minimize adverse impacts to sovereignty submerged lands and resources.

(5) Construction, use, or operation of the structure or activity shall not adversely affect any species which is endangered, threatened or of special concern, as listed in Rules 68A-27.003, 68A-27.004, and 68A-27.005, F.A.C.

(6) Structures or activities shall not unreasonably interfere with riparian rights. When a court of competent jurisdiction determines that riparian rights have been unlawfully affected, the structure or activity shall be modified in accordance with the court's decision.

(7) Structures or activities shall not create a navigational hazard.

(8) Structures shall be maintained in a functional condition and shall be repaired or removed if they become dilapidated to such an extent that they are no longer functional. This shall not be construed to prohibit the repair or replacement subject to the provisions of Rule 18-21.005, F.A.C., within one year, of a structure damaged in a discrete event such as a storm, flood, accident, or fire.

(9) Structures or activities shall be constructed, operated, and maintained solely for water dependent purposes, or for non-water dependent activities authorized under paragraph 18-21.004(1)(f), F.A.C., or any other applicable law.

Attachment A **File No.: 13-0298710-001**

STATE OF FLORIDA
DEPARTMENT OF ENVIRONMENTAL PROTECTION
NOTICE OF DETERMINATION OF EXEMPTION

The Department of Environmental Protection gives notice that the project to replace an existing dock with an irregular shaped 428 ft^2 dock, consisting of two 4-ft. x 45-ft. (360 ft^2) finger piers, connected by a 4-ft. x 17-ft. (68 ft^2) marginal dock, all of which shall have grated decking and to install two boat lifts, located in Biscayne Bay, within the Biscayne Bay Aquatic Preserve, Class III Waters, Outstanding Florida Waters, adjacent to 921 N. Venetian Way, Miami (Section 31, Township 53 South, Range 42 East), in Miami-Dade County (Latitude N 25° 47' 27.90", Longitude W 80° 10' 34.44") has been determined to be exempt from requirements to obtain an environmental resource permit.

A person whose substantial interests are affected by the Department's action may petition for an administrative proceeding (hearing) under sections 120.569 and 120.57 of the Florida Statutes. The petition must contain the information set forth below and must be filed (received by the clerk) in the Office of General Counsel of the Department at 3900 Commonwealth Boulevard, Mail Station 35, Tallahassee, Florida 32399-3000.

Mediation is not available.

If a timely and sufficient petition for an administrative hearing is filed, other persons whose substantial interests will be affected by the outcome of the administrative process have the right to petition to intervene in the proceeding. Intervention will be permitted only at the discretion of the presiding officer upon the filing of a motion in compliance with rule 28-106.205 of the Florida Administrative Code.

In accordance with rule 62-110.106(3), F.A.C., petitions for an administrative hearing must be filed within 21 days of publication of the notice or receipt of written notice, whichever occurs first. Under rule 62-110.106(4) of the Florida Administrative Code, a person whose substantial interests are affected by the Department's action may also request an extension of time to file a petition for an administrative hearing. The Department may, for good cause shown, grant the request for an extension of time. Requests for extension of time must be filed with the Office of General Counsel of the Department at 3900 Commonwealth Boulevard, Mail Station 35, Tallahassee, Florida 32399-3000 prior to the applicable deadline. A timely request for extension of time shall toll the running of the time period for filing a petition until the request is acted upon. Upon motion by the requesting party showing that the failure to file a request for an extension of time before the deadline was the result of excusable neglect, the Department may also grant the requested extension of time.

The petitioner shall mail a copy of the petition to the applicant at the address indicated above at the time of filing. The failure of any person to file a petition for an administrative hearing within the appropriate time period shall constitute a waiver of that right.

A petition that disputes the material facts on which the Department's action is based must contain the following information:

(a) The name and address of each agency affected and each agency's file or identification number, if known;
(b) The name, address, and telephone number of the petitioner; the name, address, and telephone number of the petitioner's representative, if any, which shall be the address for service purposes during the course of the proceeding; and an explanation of how the petitioner's substantial interests are or will be affected by the agency determination;
(c) A statement of when and how the petitioner received notice of the agency decision;
(d) A statement of all disputed issues of material fact. If there are none, the petition must so indicate;
(e) A concise statement of the ultimate facts alleged, including the specific facts the petitioner contends warrant reversal or modification of the agency's proposed action;
(f) A statement of the specific rules or statutes that the petitioner contends require reversal or modification of the agency's proposed action; and
(g) A statement of the relief sought by the petitioner, stating precisely the action that the petitioner wishes the agency to take with respect to the agency's proposed action.

A petition that does not dispute the material facts on which the Department's action is based shall state that no such facts are in dispute and otherwise shall contain the same information as set forth above, as required by rule 28-106.301.

Under sections 120.569(2)(c) and (d) of the Florida Statutes, a petition for administrative hearing shall be dismissed by the agency if the petition does not substantially comply with the above requirements or is untimely filed.

Complete copies of all documents relating to this determination of exemption are available for public inspection during normal business hours, 8:00 a.m. to 5:00 p.m., Monday through Friday, at the Southeast District office, 400 North Congress Avenue, West Palm Beach, Florida.

My Home
Miami-Dade County, Florida

miamidade.gov

MIAMI-DADE

Property Information Map

Digital Orthophotography - 2007 0 119 ft

This map was created on 2/3/2010 9:27:57 AM for reference purposes only.

Web Site © 2002 Miami-Dade County. All rights reserved.

Close

DEPARTMENT OF ENVIRONMENTAL PROTECTION
1 of 4
Proj.. Hill, Ken
David Litts
Date: MAR 0 3 2010
By: Jim Sandgaard
13-6298710-001
STATE OF FLORIDA

Summary Details:

Folio No.:	01-3231-026-0100
Property:	921 N VENETIAN WAY
Mailing Address:	KEN HILL INVESTMENT GROUP INC 101 JIM WRIGHT FREEWAY S STE 200 FORT WORTH TX 76108-

Property Information:

Primary Zone:	0100 SINGLE FAMILY RESIDENCE
CLUC:	0001 RESIDENTIAL-SINGLE FAMILY
Beds/Baths:	4/4
Floors:	1
Living Units:	1
Adj Sq Footage:	3,605
Lot Size:	16,000 SQ FT
Year Built:	1948
Legal Description:	BISCAYNE ISL RE-SUB PB 40-34 LOT 13 BLK 1 AND PROP INT IN & TO COMMON ELEMENTS NOT DEDICATED TO PUBLIC LOT SIZE 100.000 X 160 OR 18809-3022 09 1999 1

Assessment Information:

Year:	2009	2008
Land Value:	$2,800,000	$3,280,000
Building Value:	$765,044	$769,323
Market Value:	$3,565,044	$4,049,323
Assessed Value:	$1,293,211	$1,291,920

Exemption Information:

Year:	2009	2008
Homestead:	$25,000	$25,000
2nd Homestead:	YES	YES

Taxable Value Information:

Year:	2009	2008
Taxing Authority:	Applied Exemption/ Taxable Value:	Applied Exemption/ Taxable Value:
Regional:	$50,000/ $1,243,211	$50,000/ $1,241,920
County:	$50,000/ $1,243,211	$50,000/ $1,241,920
City:	$50,000/ $1,243,211	$50,000/ $1,241,920
School Board:	$25,000/ $1,268,211	$25,000/ $1,266,920

Sale Information:

Sale Date:	11/2009
Sale Amount:	$3,700,000
Sale O/R:	27095-4252
Sales Qualification Description:	Sales qualified as a result of examination of the deed

View Additional Sales

44

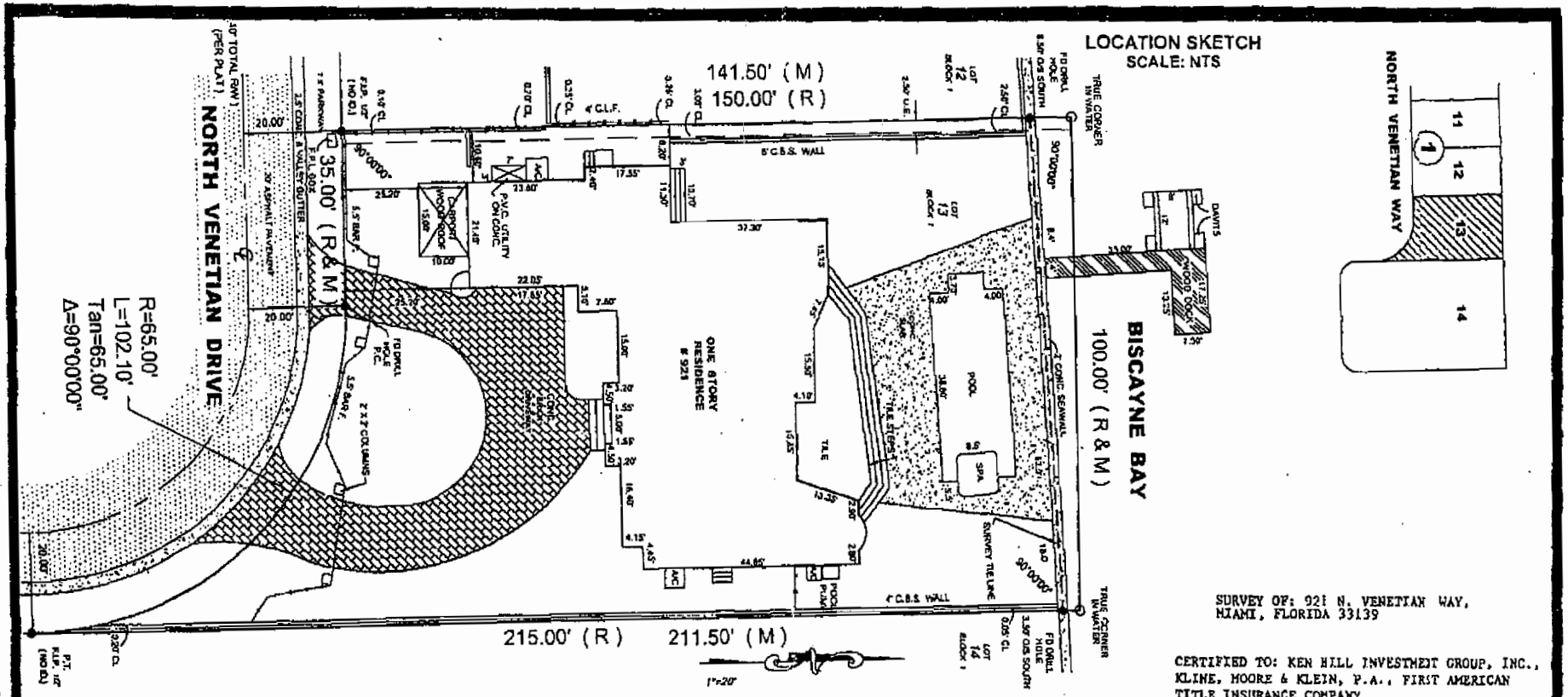

SURVEY OF: 921 N. VENETIAN WAY, MIAMI, FLORIDA 33139

CERTIFIED TO: KEN HILL INVESTMENT GROUP, INC., KLINE, MOORE & KLEIN, P.A., FIRST AMERICAN TITLE INSURANCE COMPANY

LEGAL DESCRIPTION: LOT 13 BLOCK 1
OF RESUBDIVISION OF A PORTION OF BISCAYNE ISLAND SUBDIVISION
ACCORDING TO THE PLAT THEREOF AS RECORDED IN PLAT BOOK 40 AT PAGE 34
OF THE PUBLIC RECORDS MIAMI-DADE COUNTY, FLORIDA

ABBREVIATIONS:
CBS=CONCRETE BLOCK STRUCTURE, CLF=CHAIN LINK FENCE, PL=PROPERTY LINE, DUE=DRAINAGE UTILITY EASEMENT, IP=IRON PIPE, F=FOUND, A/C=AIR CONDITIONER PAD, P/C=PROPERTY CORNER, DH=DRILLED HOLE, WF=WOODEN FENCE, RES=RESIDENCE, CL=CLEAR, RB=REBAR, UE=UTILITY EASEMENT, CONC=CONCRETE SLAB, RW=RIGHT OF WAY, DE=DRAINAGE EASEMENT, CA=CENTER LINE, D=DIAMETER, TYP=TYPICAL, M=MEASURED, R=RECORDED, ENCR=ENCROACHMENT, COMP=COMPUTER, ASH=ASPHALT, NID=NAIL & DISC, S=SET, FEF=FINISH FLOOR ELEVATION, O/X=OFFSET, PP=POWER POLE, OHP=OVERHEAD POWERLINE, WM=WATER METER
WOODFENCE=
MASONRY WALL=
CONCRETE=
MAINTENANCE & DRAINAGE EASEMENT= M & D E.

ELEVATION BASED ON LOC. #
TYPE OF SURVEY: BOUNDARY SURVEY

SURVEYOR'S NOTES: 1) OWNERSHIP SUBJECT TO OPINION OF TITLE. 2) NOT VALID WITHOUT THE SIGNATURE AND RAISED SEAL OF A FLORIDA LICENSED SURVEYOR AND MAPPER. 3) THE SURVEY DEPICTED HERE IS NOT COVERED BY PROFESSIONAL LIABILITY INSURANCE. 4) LEGAL DESCRIPTION PROVIDED BY CLIENT. 5) UNDERGROUND ENCROACHMENTS NOT LOCATED. 6) ELEVATIONS ARE BASED ON NATIONAL GEODETIC VERTICAL DATUM OF 1929. 7) OWNERSHIP OF FENCES ARE UNKNOWN. 8) THERE MAY BE ADDITIONAL RESTRICTIONS NOT SHOWN ON THIS SURVEY THAT MAY BE FOUND IN THE PUBLIC RECORDS OF THIS COUNTY. 9) CONTACT THE APPROPRIATE AUTHORITY PRIOR TO ANY DESIGN WORK FOR BUILDING AND ZONING INFORMATION. 10) EXAMINATION OF THE ABSTRACT OF TITLE WILL HAVE TO BE MADE TO DETERMINE RECORDED INSTRUMENTS, IF ANY, AFFECTING THIS PROPERTY.

BEARINGS WHEN SHOWN ARE REFERRED TO AN ASSUMED VALUE OF SAID PL ____ PAGE ____

NOT VALID UNLESS EMBOSSED WITH SURVEYOR'S SEAL

REVISED:

I HEREBY CERTIFY That the survey represented thereon meets the minimum technical requirements adopted by the STATE OF FLORIDA Board of Land Surveyors pursuant to Section 472.027 Florida Statutes.
There are no encroachments, overlaps, easements appearing on the plat or visible easements other than as shown hereon.

ADIS N. NUNEZ
REGISTERED LAND SURVEYOR
STATE OF FLORIDA #5924

SINCE 1987
BLANCO SURVEYORS INC.
Engineers - Land Surveyors - Planners - LB # 0007859
555 NORTH SHORE DRIVE
MIAMI BEACH, FL 33141
(305) 865-1200 Email: blancosurveyorsinc@yahoo.com Fax: (305) 865-7810

FLOOD ZONE: AE	SUFFIX: L	DATE: 9/11/09	BASE: 9'
PANEL 0317	COMMUNITY # 120650		
DATE: 11/7/09	SCALE: 1" = 20'	OWN. BY. F. Blanco	JOB No 09-776

DEPARTMENT OF ENVIRONMENTAL PROTECTION
STATE OF FLORIDA
13-0298 (16-00)
MAR 03 2010
2 of 4

45

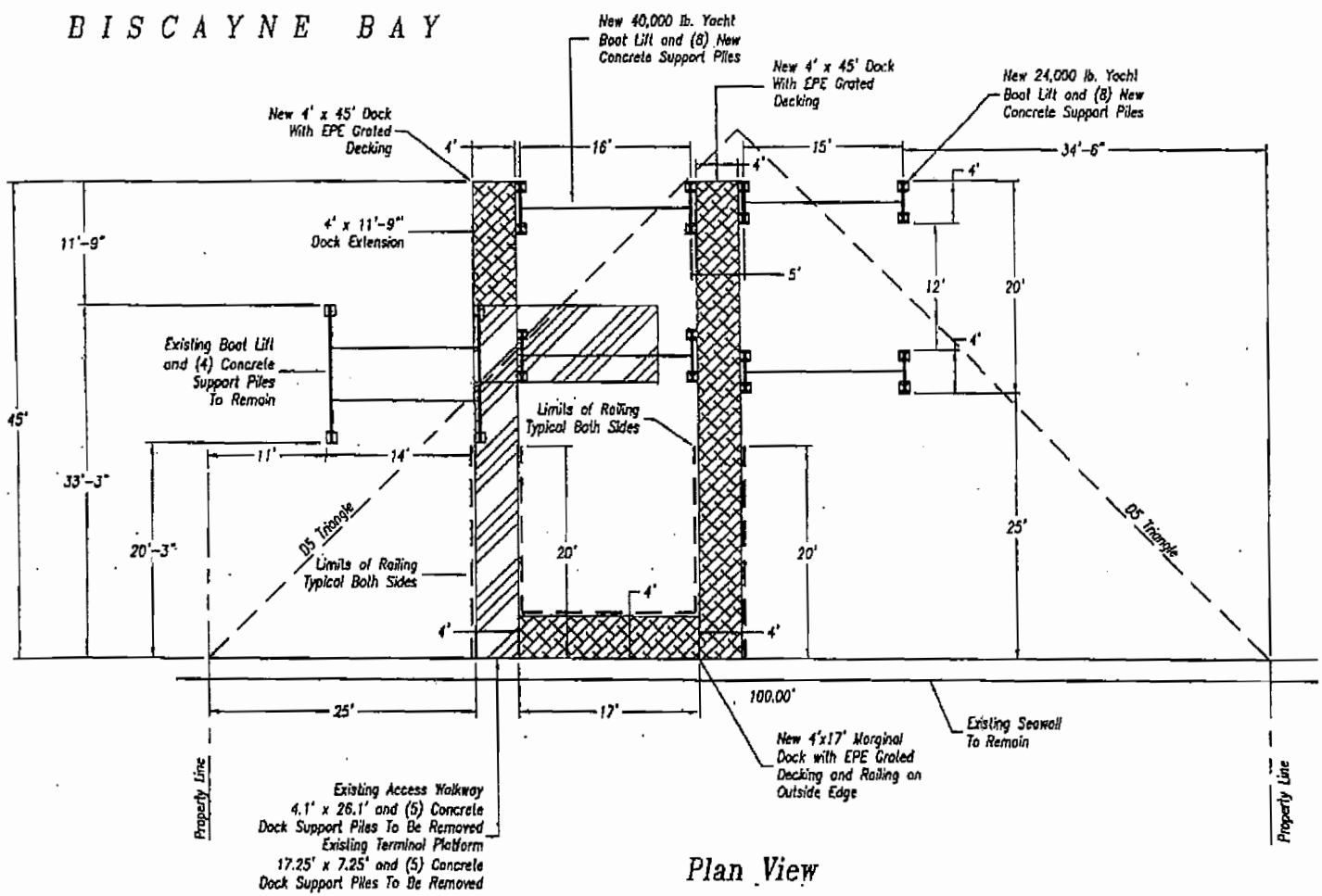

Plan View

N

Dock/Boat Lifts
Ken Hill
921 N Venetian Way
Miami, Florida 33139

Contractor to obtain utility clearance prior to pile driving. call: 1-800-432-4770

DSN WRT | DWN
DATE 01.11.10
PLOT 120
DWG No. 921 Rendered SP
DIRECTORY MA/Docks
SH 3

DEPARTMENT OF ENVIRONMENTAL PROTECTION
STATE OF FLORIDA
13-0298710-001
Proj. Hill, Ken
Dock Lifts
MAR 03 2010
Date:
By: Jean Simonard
3 of 4

4/6

The construction of the Ipe grate is as follows:

A 1" slat with a ¾" open space 0.75"/1.75=0.429=43%.

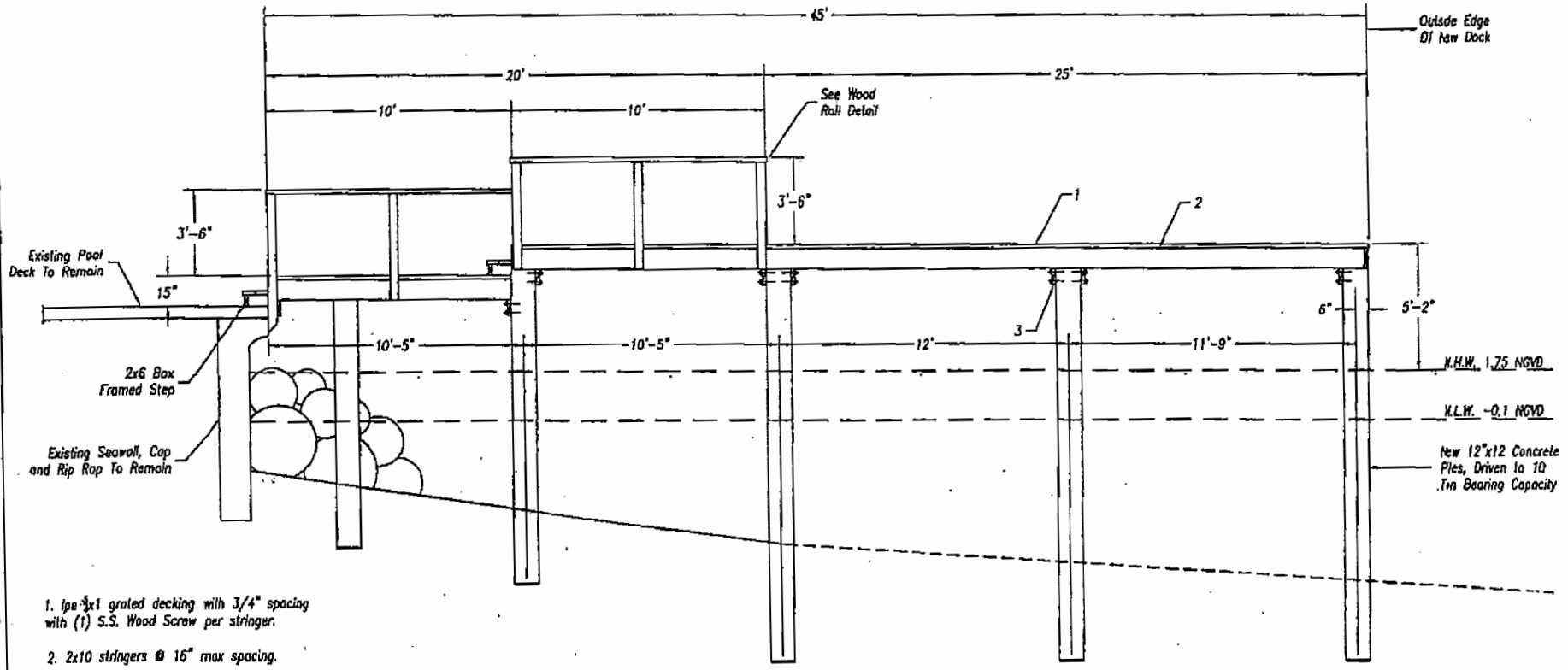

1. Ipe ¾x1 grated decking with 3/4" spacing with (1) S.S. Wood Screw per stringer.

2. 2x10 stringers @ 16" max spacing.

3. 2x8 substringer with (2) ⅝ x 6 Wedge Anchors @ piles.

4. Hurricane strap Simpson Strong-Tie FL538.1 HTS16 (Galvanized)

5. 4x10 drop hanger with (2) ⅝ x 8 wedge anchors into existing seawall, min. embedment = 4"

6. 2x8 substringer with (2) ⅝ x 8 lag bolts into drop hanger.

Dock Section (West Pier)

DEPARTMENT OF ENVIRONMENTAL PROTECTION
13-0298710-001
Proj.: Hill, Ken
dock & lifts
MAR 03 2010
Date:
By: Jeva Sunsgrad
4 of 4
STATE OF FLORIDA

Dock/Boat Lifts Ken Hill 921 N Venetian Way Miami Beach, Florida 33139	DSN WRT / DWN
Contractor to obtain utility clearance prior to pile driving. call: 1-800-432-4770	DATE 12.14.09
	PLOT 48
	DWG No. 921-Framing
	DIRECTORY MAP\Dwgs
	Sh 5

47

Attachment H

Project Report

PROJECT REPORT
CLASS I PERMIT APPLICATION NO. 2010-CLI-PER-00041

Class I Permit Application by Ken Hill Investment Group, Inc. to Install a Dock and Two (2) Boatlifts in Biscayne Bay at 921 North Venetian Way, Miami, Miami-Dade County

Date: September 20, 2010

Staff's recommendation of approval for the above-referenced permit application is based on the applicable evaluation factors under Section 24-48.3 of the Code of Miami-Dade County (Code), Florida. The following is a summary of the proposed project with respect to each applicable evaluation factor:

1. **Potential Adverse Environmental Impact** – The potential for any adverse environmental impacts from the proposed project is minimal. The proposed project involves the installation of a dock and two (2) boatlifts and will result in shading impacts to seagrasses. A benthic survey conducted by biologists from the Department of Environmental Resources Management (DERM) revealed a moderate density of seagrass within the area of the proposed work. However, seagrass density decreased approximately twenty-seven (27) linear feet waterward from the seawall and only a sparse density of seagrass was documented within the footprint of the existing dock and boatlift. In addition, a biological assessment conducted by DERM biologists revealed that the Code required water depth is not achieved until thirty-five (35) feet waterward of the seawall. To minimize new impacts to resources, including *Halophila johnsonii* (Johnson's seagrass), a Federally Listed Threatened Species, the proposed dock has been configured to utilize the area previously impacted by the existing structures and the proposed structures shall extend only the minimum distance from the seawall necessary to obtain the Code required water depth within the boat slip areas. The potential for adverse environmental impacts will be further minimized during construction operations through the use of standard turbidity control methods. In order to mitigate for unavoidable environmental impacts to existing resources, the applicant has agreed to provide a contribution to the Biscayne Bay Environmental Enhancement Trust Fund in the amount of $9,063.00 which shall be specifically designated for habitat creation/restoration projects in Biscayne Bay and its foreshore.

   The project is not located within an area designated as essential manatee habitat for the *Trichechus manatus* (West Indian Manatee) by the Miami-Dade County Manatee Protection Plan (MDCMPP). However, the Class I permit will require that all standard manatee conditions be followed during all in-water construction operations. Additionally, the Class I permit will have conditions to minimize turbidity and protect rare, threatened, and endangered species.

2. **Potential Cumulative Adverse Environmental Impact** – The proposed project is not reasonably expected to result in potential cumulative adverse environmental impacts.

3. **Hydrology** – The proposed project, as designed, is not reasonably expected to adversely affect existing patterns or volumes of flow in the area.

4. **Water Quality** – The proposed project may temporarily affect surface water quality during construction operations. However, these impacts will be minimized by the implementation of proper turbidity control devices.

5. **Wellfields** – Not applicable.

6. **Water Supply** – Not applicable.

7. **Aquifer Recharge** – Not applicable.

8. **Aesthetics** – The project is designed to be aesthetically compatible with the surrounding area and is not reasonably expected to have negative aesthetic impacts. The previous owners of the subject property obtained Class I permit number CC04-155 for the installation of the existing dock and boatlift. At the time CC04-155 was issued, Jorge and Milagros Lopez owned the adjacent property and submitted a letter of consent for the approved work. The applicant intends to remove the existing dock and replace it with a U-shaped dock that will utilize the footprint of the existing dock and extend eastward. The existing boatlift is proposed to remain in its current location and two (2) additional boatlifts will be installed on the U-shaped dock to accommodate a total of three (3) vessels on-site. Although portions of the proposed structures are to be constructed outside the boundaries described in Section D-5(03)(2)(a) of the Miami-Dade County Public Works Manual, the Code

specifies that other factors contributing to this exceedance shall be considered, including but not limited to, whether or not the proposed exceedance is necessary to avoid seagrasses or other valuable environmental resources; or to achieve adequate water depth for the mooring of a vessel. A benthic survey conducted by DERM biologists revealed a moderate density of seagrass within the area of the proposed work. However, seagrass density decreased approximately twenty-seven (27) linear feet waterward from the seawall and only a sparse density of seagrass was documented within the footprint of the existing dock and boatlift. In addition, a biological assessment conducted by DERM biologists revealed that the Code required water depth is not achieved until thirty-five (35) feet waterward of the seawall. To minimize new impacts to resources, including Johnson's seagrass, a Federally Listed Threatened Species, the proposed dock has been configured to utilize the area previously impacted by the existing structures and the proposed structures shall extend only the minimum distance from the seawall necessary to obtain the Code required water depth within the boat slip areas. The Class I permit will also require vessels to moor bow-in at the subject property, which will reduce the aesthetic impacts associated with the project while maintaining approximately three hundred (300) linear feet of clearance from the adjacent navigable channel.

Furthermore, during construction operations there may be temporary aesthetic impacts related to the presence of barges and other machinery associated with the construction activities.

9. **Navigation** – The proposed project is not reasonably expected to adversely affect navigation. A biological assessment conducted by DERM biologists revealed that the Code required water depth is not achieved until thirty-five (35) feet waterward of the seawall. Therefore, the dock and boatlifts have been designed to extend only the minimum distance from the seawall necessary to obtain the Code required water depth within the boat slip areas. The Class I permit will also require vessels to moor bow-in at the subject property maintaining approximately three hundred (300) linear feet of clearance from the adjacent navigable channel.

10. **Public Health** - The proposed project is not reasonably expected to adversely affect public health.

11. **Historic Values** - The proposed project is not reasonably expected to adversely affect historic values.

12. **Archaeological Values** - The proposed project is not reasonably expected to adversely affect archaeological values.

13. **Air Quality** – The proposed project is not reasonably expected to adversely affect air quality.

14. **Marine and Wildlife Habitats** – The proposed project involves the installation of a dock and two (2) boatlifts and has been designed to minimize impacts to marine and wildlife habitats. The proposed work is located within an area designated by the National Marine Fisheries Service-Protected Resources Division (NMFS-PRD) as critical habitat for Johnson's seagrass. Although a benthic survey conducted by DERM biologists revealed a moderate density of seagrass within the area of the proposed work, seagrass density decreased approximately twenty-seven (27) linear feet waterward from the seawall and only a sparse density of seagrass was documented within the footprint of the existing dock and boatlift. In addition, a biological assessment conducted by DERM biologists revealed that the Code required water depth is not achieved until thirty-five (35) feet waterward of the seawall. The proposed project has been designed to minimize new impacts to resources and is not reasonably expected to adversely affect Johnson's seagrass, a Federally Listed Threatened Species. The proposed dock has been configured to utilize the area previously impacted by the existing structures and the proposed structures shall extend only the minimum distance from the seawall necessary to obtain the Code required water depth within the boat slip areas.

    The proposed project will also cause temporary disturbances of the substrate during construction operations. Marine soils in the area of the proposed work may support marine epifauna (animals living on the sediment surface or on the surface of other plants or animals) and infauna (animals living within submerged sediment). However, these temporary environmental impacts will be further minimized during construction operations through the use of standard turbidity control methods. In order to mitigate for unavoidable environmental impacts to existing resources, the applicant has agreed to provide a contribution to the Biscayne Bay Environmental Enhancement Trust Fund in the amount of $9,063.00 which shall be specifically designated for habitat creation/restoration projects in Biscayne Bay and its foreshore.

The project is not located within an area designated as essential manatee habitat for the West Indian Manatee by the MDCMPP. However, the Class I permit will require that all standard manatee conditions be followed during all in-water construction operations. Additionally, the Class I permit will have conditions to minimize turbidity and protect rare, threatened, and endangered species.

15. **Wetland Soils Suitable for Habitat** – The proposed project does not involve any work in wetland soils.

16. **Floral Values** – The proposed project will result in minimal impacts to marine floral values. Although, a benthic survey conducted by DERM biologists revealed a moderate density of seagrass within the area of the proposed work, seagrass density decreased approximately twenty-seven (27) linear feet waterward from the seawall and only a sparse density of seagrass was documented within the footprint of the existing dock and boatlift. In addition, a biological assessment conducted by DERM biologists revealed that the Code required water depth is not achieved until thirty-five (35) feet waterward of the seawall. The proposed project has been designed to minimize new impacts to resources and is not reasonably expected to adversely affect Johnson's seagrass, a Federally Listed Threatened Species. The proposed dock has been configured to utilize the area previously impacted by the existing structures and the proposed structures shall extend only the minimum distance from the seawall necessary to obtain the Code required water depth within the boat slip areas. In order to mitigate for unavoidable environmental impacts to existing resources, the applicant has agreed to provide a contribution to the Biscayne Bay Environmental Enhancement Trust Fund in the amount of $9,063.00 which shall be specifically designated for habitat creation/restoration projects in Biscayne Bay and its foreshore.

17. **Fauna Values** – The proposed project is not reasonably expected to adversely affect marine fauna. The proposed project will cause temporary disturbances of the substrate during construction operations. Marine soils in the area of the proposed work may support marine epifauna (animals living on the sediment surface or on the surface of other plants or animals) and infauna (animals living within submerged sediment). However, these temporary environmental impacts will be further minimized during construction operations through the use of standard turbidity control methods.

    The project is not located within an area designated as essential manatee habitat for the West Indian Manatee by the MDCMPP. However, the Class I permit will require that all standard manatee conditions be followed during all in-water construction operations. Additionally, the Class I permit will have conditions to minimize turbidity and protect rare, threatened, and endangered species.

18. **Rare, Threatened and Endangered Species** – The proposed work is not reasonably expected to result in adverse environmental impacts to rare threatened or endangered species. The proposed work is located within an area designated by the NMFS-PRD as critical habitat for Johnson's seagrass. Although a benthic survey conducted by DERM biologists revealed a moderate density of seagrass within the area of the proposed work, seagrass density decreased approximately twenty-seven (27) linear feet waterward from the seawall and only a sparse density of seagrass was documented within the footprint of the existing dock and boatlift. In addition, a biological assessment conducted by DERM biologists revealed that the Code required water depth is not achieved until thirty-five (35) feet waterward of the seawall. The proposed project has been designed to minimize new impacts to resources and is not reasonably expected to adversely affect Johnson's seagrass, a Federally Listed Threatened Species. The proposed dock has been configured to utilize the area previously impacted by the existing structures and the proposed structures shall extend only the minimum distance from the seawall necessary to obtain the Code required water depth within the boat slip areas.

    The project is not located within an area designated as essential manatee habitat for the West Indian Manatee by the MDCMPP. However, the Class I permit will require that all standard manatee conditions be followed during all in-water construction operations. Additionally, the Class I permit will have conditions to minimize turbidity and protect rare, threatened, and endangered species.

19. **Natural Flood Damage Protection** - The proposed project is not reasonably expected to adversely affect surface water drainage or retention of stormwater.

20. **Wetland Values** – The proposed project is not reasonably expected to adversely affect wetland values.

21. **Land Use Classification** – Pursuant to Section 24-48.2(II)(A)(7), of the Code of Miami-Dade County, Florida, a substantiating letter shall be submitted stating that the proposed project does not violate any zoning laws. Said letter will be submitted after the approval by the Board of County Commissioners and prior to the issuance of a Class I permit. The applicant has obtained zoning approval from the City of Miami for the proposed structures.

22. **Recreation** - The proposed project does not conflict with the recreation element of the Miami-Dade County Comprehensive Development Master Plan.

23. **Other Environmental Values Affecting the Public Interest** - The proposed project is not reasonably expected to adversely affect environmental values affecting the public interest. The proposed work will occur on sovereign submerged lands, and the Florida Department of Environmental Protection (FDEP) has determined that the project qualifies for a letter of consent to use sovereign submerged lands and has issued an exemption for the proposed work.

24. **Conformance with Standard Construction Procedures and Practices and Design and Performance Standards** – The proposed project complies with the standard construction procedures and practices and design and performance standards of the following:

    a) Chapter 33B of the Code of Miami-Dade County
    b) Biscayne Bay Management Plan (Sections 33D-1 through 33D-4 of the Code of Miami-Dade County)

25. **Conformance with Standard Construction Procedures and Practices and Design and Performance Standards** – The proposed project complies with the standard construction procedures and practices and design and performance standards of the following:

    c) Chapter 33B of the Code of Miami-Dade County
    d) Biscayne Bay Management Plan (Sections 33D-1 through 33D-4 of the Code of Miami-Dade County)

26. **Comprehensive Environmental Impact Statement (CEIS)** – In the opinion of the Director, the proposed project will result in only minimal adverse environmental impacts and is not reasonably expected to result in cumulative adverse environmental impacts. Therefore, a CEIS was not required by DERM to evaluate the project.

27. **Conformance with All Applicable Federal, State and Local Laws and Regulations** - The proposed project is in conformance with the following applicable State, Federal and local laws and regulations:

    a) Chapter 24 of the Code of Miami-Dade County
    b) United States Clean Water Act (US Army Corps of Engineers permit is required)
    c) Florida Department of Environmental Protection (project has received exemption for the FDEP)
    d) Biscayne Bay Aquatic Preserve Act

28. **Conformance with the Miami-Dade County Comprehensive Development Master Plan (CDMP)** - In the opinion of DERM, the proposed project is in conformance with the CDMP. The following is a summary of the proposed project as it relates to the CDMP:

LAND USE ELEMENT I:

Objective 2/Policy 2A - Level of Service. The proposed project does not involve new or significant expansion of existing urban land uses.

Objective 3/Policies 3A, 3B, 3C - Protection of natural resources and systems. – The proposed project is consistent with the Conservation and Coastal Management Elements of the CDMP. The project is compatible with surrounding land uses in Biscayne Bay and does not involve development in the Big Cypress area of Critical State concern or the East Everglades.

TRANSPORTATION ELEMENT II

Aviation Subelement/Objective 9 - Aviation System Expansion - There is no aviation element to the proposed project.

Port of Miami River Subelement/Objective 3 - Minimization of impacts to estuarine water quality and marine resources. The proposed project will not take place within the tidal waters of the Miami River.

CONSERVATION, AQUIFER RECHARGES AND DRAINAGE ELEMENT IV:

Objective 3/Policies 3A, 3B, 3D - Wellfield protection area protection. - The proposed project is not located within a wellfield protection area.

Objective 3/Policy 3E - Limestone mining within the area bounded by the Florida Turnpike, the Miami-Dade/Broward Levee, N.W. 12 Street and Okeechobee Road. - The proposed project is not located within this area.

Objective 4/Policies 4A, 4B, 4C - Water storage, aquifer recharge potential and maintenance of natural surface water drainage. - The proposed project is not reasonably expected to adversely affect water storage, aquifer recharge potential or natural surface water drainage.

Objective 5/Policies 5A, 5B, 5F - Flood protection and cut and fill criteria. – The proposed project does not compromise flood protection, involve filling for development purposes, and is not related to cut and fill activities.

Objective 6/Policy 6A - Areas of highest suitability for mineral extraction. - The proposed project is not located in an area proposed or suitable for mineral extraction.

Objective 6/Policy 6B - Guidelines for rock quarries for the re-establishment of native flora and fauna. - The proposed project is not located in a rock quarry.

Objective 6/Policy 6D - Suitable fill material for the support of development. – The proposed project does not involve filling for the purposes of development.

Objective 7/Policy 7A - No net loss of high quality, relatively unstressed wetlands. - The proposed project will not result in a net loss of high quality wetlands.

Objective 9/Policies 9A, 9B, 9C – Protection of habitat critical to Federal or State-designated threatened or endangered species. – The proposed project is not reasonably expected to adversely affect habitat critical to Federal or State-designated threatened or endangered species. The proposed work is located within an area designated by the NMFS-PRD as critical habitat for Johnson's seagrass. Although a benthic survey conducted by DERM biologists revealed a moderate density of seagrass within the area of the proposed work, seagrass density decreased approximately twenty-seven (27) linear feet waterward from the seawall and only a sparse density of seagrass was documented within the footprint of the existing dock and boatlift. In addition, a biological assessment conducted by DERM biologists revealed that the Code required water depth is not achieved until thirty-five (35) feet waterward of the seawall. The proposed project has been designed to minimize new impacts to resources and is not reasonably expected to adversely affect Johnson's seagrass, a Federally Listed Threatened Species. The proposed dock has been configured to utilize the area previously impacted by the existing structures and the proposed structures shall extend only the minimum distance from the seawall necessary to obtain the Code required water depth within the boat slip areas.

In addition, the proposed project is not located within an area designated as essential manatee habitat for the West Indian Manatee by the MDCMPP. However, the Class I permit will require that all standard manatee conditions be followed during all in-water construction operations.

COASTAL MANAGEMENT ELEMENT VII:

Objective 1/Policy 1A - Tidally connected mangroves in mangrove protection areas. – The proposed project is not located within a designated "Mangrove Protection Area."

Objective 1/ Policy 1B - Natural surface flow into and through coastal wetlands. – The project will not affect natural surface flow into and through coastal wetlands.

Objective 1/ Policy 1C - Elevated boardwalk access through mangroves. – The proposed project does not involve access through mangroves.

Objective 1/Policy 1D - Protection and maintenance of mangrove forests and related natural vegetational communities. – The proposed project does not involve work in mangrove forests, coastal hammock, or other natural vegetational communities.

Objective 1/Policy 1E - Mitigation for the degradation and destruction of coastal wetlands. Monitoring and maintenance of mitigation areas. – The proposed project does not involve the degradation and destruction of coastal wetlands and therefore does not involve monitoring of mitigation for impacts to coastal wetlands.

Objective 1/Policy 1G - Prohibition on dredging or filling of grass/algal flats, hard bottom or other viable benthic communities, except as provided for in Chapter 24 of the Code of Miami-Dade County, Florida. – The proposed project does not involve dredging or filling of grass/algal flats, hard bottom or other viable benthic communities.

Objective 2/Policies 2A, 2B - Beach restoration and renourishment objectives. - The proposed project does not involve beach restoration or renourishment.

Objective 3/Policy 3E, 3F - Location of new cut and spoil areas for proper stabilization and minimization of damages. - The proposed project does not involve the development or identification of new cut or spoil areas.

Objective 4/Policy 4A, 4C, 4E, 4F – Protection of endangered or threatened animal species. - The proposed work is not reasonably expected to adversely affect endangered or threatened species. The proposed project is not located within an area designated as essential manatee habitat for the West Indian Manatee by the MDCMPP. However, the Class I permit will require that all standard manatee conditions be followed during all in-water construction operations. Additionally, the Class I permit will have conditions to minimize turbidity and to protect rare, threatened, and endangered species.

Objective 5/Policy 5B - Existing and new areas for water-dependent uses. – The proposed project involves utilizing an existing boatlift and the installation of a U-shaped dock with two (2) additional boatlifts that will accommodate a total of three (3) vessels on-site. The proposed structures will enhance water dependant use at the site.

Objective 5/Policy 5D - Consistency with Chapter 33D, Miami-Dade County Code (shoreline access, environmental compatibility of shoreline development) - The Shoreline Development Review Committee has evaluated the proposed project and determined that the thresholds for review under the Shoreline Ordinance do not apply and the proposed project is not subject to shoreline development review.

Objective 5/Policy 5F - The siting of water dependent facilities. - The proposed project does not involve the creation of any new water dependent facilities.

28. **Conformance with Chapter 33B, Code of Miami-Dade County** (East Everglades Zoning Overlay Ordinance) – The proposed project is not located within the East Everglades Area.

29. **Conformance with Miami-Dade County Ordinance 81-19** (Biscayne Bay Management Plan Sections 33D-1 through 33D-4 of the Code of Miami-Dade County) - The proposed project is consistent with the Biscayne Bay Management Plan.

30. **Conformance with the Miami-Dade County Manatee Protection Plan** – The proposed project is not located within an area designated as essential manatee habitat for the West Indian Manatee by the MDCMPP. However, the Class I permit will require that all standard manatee conditions be followed during all in-water construction operations.

31. **Consistency with Miami-Dade County Criteria for Lake Excavation** – The proposed project does not involve lake excavation.

32. **Municipality Recommendation** – Pursuant to Section 24-48.2(II)(A)(7), of the Code of Miami-Dade County, Florida, a substantiating letter shall be submitted stating that the proposed project does not violate any zoning laws. Said letter will be submitted after the approval by the Board of County Commissioners and prior to the issuance of a Class I permit. The applicant has obtained zoning approval from the City of Miami for the proposed structures.

33. **Coastal Resources Management Line** - A coastal resources management line was not required for the proposed project, pursuant to Section 24-48.2(II)(A)(10)(b) of the Code of Miami-Dade County, Florida.

34. **Maximum Protection of a Wetland's Hydrological and Biological Functions** – The proposed project is not reasonably expected to impact wetland hydrological and biological functions.

35. **Class I Permit Applications Proposing to Exceed the Boundaries Described in Section D-5.03(2)(a) of the Miami-Dade County Public Works Manual**

    i. **Whether the proposed exceedance is the minimum necessary to avoid seagrasses or other valuable environmental resources** – The proposed project has been designed to avoid and minimize environmental impacts to seagrass resources.
    ii. **Whether the proposed exceedance is the minimum necessary to achieve adequate water depth for mooring of a vessel** – The proposed project complies with the water depth requirements set forth in Section 24-48.3(3) of the Code of Miami-Dade County.
    iii. **Whether the applicant has provided notarized letters of consent to DERM from adjoining riparian property owners** – A notarized letter of consent from adjoining riparian property owner to the east has been submitted to DERM.
    iv. **Whether any letters of objection from adjoining riparian property owners were received by DERM** – A letter of objection from adjoining riparian property owners to west, Jorge and Milagros Lopez, has been received by DERM.

The proposed project was also evaluated for compliance with the standards contained in Section 24-48.3(2), (3), and (4) of the Code of Miami-Dade County, Florida. The following is a summary of how the standards relate to the proposed project:

24-48.3 (2) Dredging and Filling for Class I Permit - The proposed project does not involve dredging and filling activities.

24-48.3 (3) Minimum Water Depth Required for Boat Slips Created by the Construction or Placement of Fixed or Floating Docks and Piers, Piles and Other Structures Requiring a Permit Under Article IV, Division 1 of Chapter 24 of the Code of Miami-Dade County – The proposed project complies with the water depth requirements set forth in Section 24-48.3(3) of the Code of Miami-Dade County.

24-48.3 (4) Clean Fill in Wetlands – The proposed project does not involve placing clean fill in wetlands.

BASED ON THE FOREGOING, IT IS RECOMMENDED THAT A CLASS I PERMIT BE APPROVED.

Lisa Spadafina, Manager
Coastal Resources Section

Martha Fundora, Biologist I
Coastal Resources Section