OFFICIAL FILE COPY
CLERK OF THE BOARD
OF COUNTY COMMISSIONERS
MIAMI-DADE COUNTY, FLORIDA

Memorandum

MIAMI-DADE COUNTY

Agenda Item No. 5(C)

Date: April 2, 2013

To: Honorable Chairwoman Rebeca Sosa
and Members, Board of County Commissioners

From: Carlos A. Gimenez
County Mayor

Subject: Class IV Permit Application by the National Park Service Requesting Authorization to Fill 1.42 Acres of Wetlands to Provide Parking and Various Amenities for Visitors to the Big Cypress National Preserve

Resolution No. R-220-13

Attached, please find for your consideration an application by the National Park Service for a Class IV permit. Also attached is the recommendation of the Director of the Department of Regulatory and Economic Resources and a proposed resolution approving the issuance of the Class IV permit.

Jack Osterholt, Deputy Mayor

Memorandum

MIAMI-DADE COUNTY

Date: March 14, 2013

To: Carlos A. Gimenez
County Mayor

From: Jack Osterholt, Deputy Mayor, Director
Department of Regulatory and Economic Resources

Subject: Class IV Permit Application by the National Park Service Requesting Authorization to Fill 1.42 Acres of Wetlands to Provide Parking and Various Amenities for Visitors to the Big Cypress National Preserve

---

Recommendation
I have reviewed the attached application for a Class IV permit by the National Park Service. Based upon the applicable evaluation factors set forth in Section 24-48.3 of the Code of Miami-Dade County, I recommend that the Board of County Commissioners (Board) approve the issuance of a Class IV permit for the reasons set forth below.

Scope
The site is located south of US Highway 41 / Tamiami Trail and Loop Road, approximately 22 miles west of Krome Avenue in Commission District 11 (Commissioner Zapata).

Fiscal Impact/Funding Source
Not applicable

Track Record/Monitor
The Coastal and Wetlands Resources Section Manager, Lisa Spadafina, in the Department of Regulatory & Economic Resources, Division of Environmental Resources Management, will be responsible for monitoring the conditions of the permit.

Background
In the attached Class IV permit application, the National Park Service (NPS) requests authorization to fill 1.42 acres of wetlands not supporting halophytic (salt tolerant) vegetation at the Loop Road access point known as the Boundary Line trail head located south of US Highway 41 / Tamiami Trail, approximately 22 miles west of Krome Avenue.

This site is one of four recreational access points within the Big Cypress National Preserve (Preserve) that the NPS is currently improving in order to provide parking, restrooms and a launch ramp for the public. These access points, or trail heads, are used by the public to launch airboats into the Preserve. Currently, the NPS states that the access points do not offer sufficient area for parking, amenities or for the safe launching of airboats. Of the four access points where filling of wetlands is proposed will occur, only this site is located in Miami-Dade County.

This project is coming before the Board because Chapter 24-48 of the Code requires Board approval for the issuance of Class IV permits to dredge and fill more than one (1) acre of wetlands in areas designated as "Environmental Protection."

The wetlands proposed to be impacted within the project site are characterized as cypress

prairie, cypress strand and wet prairie. Cypress wetlands are dominant within approximately 1.19 acres of the proposed impact area. The remaining wetland area, approximately 0.23 acres, consists of cypress prairie and wet prairie.

Compensatory mitigation for the ecological impacts related to the loss of wetland functions will be accomplished by the restoration of a 2.10 acre fill pad known as the Golightly Fill Pad. The Golightly Fill Pad is proposed for wetlands restoration because this site is comprised of wetlands that function similarly to those in the impact area by providing water storage, treatment and habitat value in the East Collier basin. Located approximately four miles from the Boundary Line trail head in Monroe County, the Golightly Fill Pad is within the same drainage basin and is ecologically connected to the area of proposed wetlands filling.

The proposed project has been designed in accordance with all relevant Miami-Dade County Class IV permit criteria and is consistent with all other Miami-Dade County wetland protection provisions.

Please find attached a Project Report from the Department of Regulatory and Economic Resources, which sets forth in more detail the reasons this project is recommended for approval by the Coastal and Wetlands Resources Section pursuant to the applicable evaluation factors set forth in Section 24-48.3 of the Code of Miami-Dade County, Florida. The conditions, limitations, and restrictions set forth in the Project Report attached hereto are incorporated herein by reference hereto.

Attachments

Attachment A:	Class IV Permit Application
	Site Plans
Attachment B:	Applicant's/Agent's Letter
	Engineer's Certification Letter
Attachment C:	Zoning Approval Letter
	RER Water Control's Cut & Fill Approval
Attachment D:	Project Report

MEMORANDUM
(Revised)

TO: Honorable Chairwoman Rebeca Sosa
and Members, Board of County Commissioners

DATE: April 2, 2013

FROM: R. A. Cuevas, Jr.
County Attorney

SUBJECT: Agenda Item No. 5(C)

Please note any items checked.

_____ **"3-Day Rule" for committees applicable if raised**

_____ **6 weeks required between first reading and public hearing**

_____ **4 weeks notification to municipal officials required prior to public hearing**

_____ **Decreases revenues or increases expenditures without balancing budget**

_____ **Budget required**

_____ **Statement of fiscal impact required**

_____ **Ordinance creating a new board requires detailed County Mayor's report for public hearing**

✓ **No committee review**

_____ **Applicable legislation requires more than a majority vote (i.e., 2/3's ____, 3/5's ____, unanimous _____) to approve**

_____ **Current information regarding funding source, index code and available balance, and available capacity (if debt is contemplated) required**

Approved _____ Mayor
Veto _____
Override _____

Agenda Item No. 5(C)
4-2-13

RESOLUTION NO. R-220-13

RESOLUTION APPROVING A CLASS IV PERMIT APPLICATION BY THE NATIONAL PARK SERVICE REQUESTING AUTHORIZATION TO FILL 1.42 ACRES OF WETLANDS TO PROVIDE PARKING AND VARIOUS AMENITIES FOR VISITORS TO THE BIG CYPRESS NATIONAL PRESERVE LOCATED SOUTH OF U.S. HIGHWAY 41 / TAMIAMI TRAIL AND LOOP ROAD IN SECTION 19, TOWNSHIP 54 SOUTH, AND RANGE 35 EAST, FLORIDA

WHEREAS, this Board desires to accomplish the purposes outlined in the accompanying memorandum, a copy of which is incorporated herein by reference,

NOW, THEREFORE, BE IT RESOLVED BY THE BOARD OF COUNTY COMMISSIONERS OF MIAMI-DADE COUNTY, FLORIDA, that this Board having considered all the applicable factors contained within Section 24-48.3 of the Code of Miami-Dade County, hereby approves the application by the National Park Service for a Class IV permit requesting authorization to fill 1.42 acres of wetlands to provide parking and various amenities for visitors to the Big Cypress National Preserve within the project site located south of U.S. Highway 41 / Tamiami Trail and Loop Road in Section 19, Township 54S, and Range 35E, Miami-Dade County, subject to the conditions set forth in the memorandum from the Director of the Miami-Dade County Department Regulatory and Economic Resources, a copy of which is attached hereto and made a part hereof. The issuance of this approval does not relieve the applicant from obtaining all applicable Federal, State, and local permits.

The foregoing resolution was offered by Commissioner **Sally A. Heyman**, who moved its adoption. The motion was seconded by Commissioner **Xavier L. Suarez** and upon being put to a vote, the vote was as follows:

Rebeca Sosa, Chairwoman			**aye**
Lynda Bell, Vice Chair			**aye**
Bruno A. Barreiro	**absent**	Esteban L. Bovo, Jr.	**aye**
Jose "Pepe" Diaz	**absent**	Audrey M. Edmonson	**aye**
Sally A. Heyman	**absent**	Barbara J. Jordan	**aye**
Jean Monestime	**aye**	Dennis C. Moss	**aye**
Sen. Javier D. Souto	**aye**	Xavier L. Suarez	**absent**
Juan C. Zapata	**aye**		

The Chairperson thereupon declared the resolution duly passed and adopted this 2nd day of April, 2013. This resolution shall become effective ten (10) days after the date of its adoption unless vetoed by the Mayor, and if vetoed, shall become effective only upon an override by this Board.

MIAMI-DADE COUNTY, FLORIDA
BY ITS BOARD OF
COUNTY COMMISSIONERS

HARVEY RUVIN, CLERK

By: ***Christopher Agrippa***
Deputy Clerk

Approved by County Attorney as
to form and legal sufficiency.

Thomas H. Robertson

Attachment A

Class IV Permit Application
Site Plans

Class IV
Permit Application

MIAMI-DADE COUNTY

RECEIVED

FOR DEPARTMENTAL USE ONLY — Updated 09/09

Date Received:	Application Number:
JAN 30 2013	CLIV 2012 - 00 47
DERM Wetlands Resources Section Natural Resources Regulation & Restoration Division (NRRRD)	Application Fee:

Application must be filled out in its entirety. Please indicate N/A for non-applicable fields.

1. Applicant Information:

Name: National Park Service/Pedro Ramos

Address: 33100 Tamiami Trail East

Ochopee, FL Zip Code: 34141

Phone #: 239-695-1103 Fax#: 239-695-0416

Email: Pedro_Ramos@nps.gov

* This should be the applicant's information for contact purposes.

2. Applicant's Authorized Permit Agent:

Agent is allowed to process the application, furnish supplemental information relating to the application and bind the applicant to all requirements of the application.

Name: AECOM Technical Services/Kelley Peterman

Address: 150 N. Orange Ave. Suite 200

Orlando, FL Zip Code: 32801

Phone #: 407-843-6552 Fax #: 407-839-1789

Email: kelley.peterman@aecom.com

3. Location where proposed activity exists or will occur (latitude and longitude are only necessary for properties without address or folio #):

Folio #(s): 3045190000070, 3045190000018, 3045190000090, 3045190000060 Latitude: _____ Longitude: _____

Street Address: _____ Section: 19 Township: 54S Range: 35E

In City or Town: _____ Near City or Town: Ochopee

4. Describe the proposed activity (check all that apply):

- ☐ Agriculture
  - ☐ Row Crops
  - ☐ Fruit Grove
  - ☐ Field Nursery - At Grade
  - ☐ Field Nursery - Row and Furrow
  - ☐ Container Nursery
  - ☐ Shade House Nursery
  - ☐ Drainage Features
  - ☐ Other: _____
- ☐ Excavation/Dredging (See Box 6)
  - ☐ Lake Excavation
  - ☐ Drainage Features
  - ☐ Rock Mining
- ☒ Filling
  - ☐ Limerock
  - ☐ Soil/Muck
  - ☐ Sand
  - ☒ Marl
  - ☐ Clay
  - ☐ Stone
  - ☐ Concrete Rubble

☐ Other: _____

Total Property size: 1.42 acres Wetland acreage proposed to be impacted: 1.42 acres

Are you seeking an after-the-fact approval for any portion of the work (ATF)? ☐ Yes ☒ No

5. Proposed Use (check all that apply):

- ☐ Single Family
- ☐ Multi-Family
- ☐ Private
- ☒ Public
- ☐ Agricultural
- ☐ Commercial
- ☐ Industrial
- ☐ Utility
- ☐ Other

6. If the proposed work relates to Excavation/Dredging as indicated in Box 4 above, provide the following information:

Proposed acreage of excavation: _____ acres

Proposed depth of excavation: _____ feet below ground surface

Proposed acreage of backfill area: _____ acres (if applicable)

7. List all permits or certifications that have been applied for or obtained for the above referenced work:

Issuing Agency	Type of Approval	Identification Number	Application Date	Approval Date
SFWMD/ USACE	ERP/IP	PENDING		

8. Contractor Information (If known):

Name: _____ License # (County/State): _____

Address: _____ Zip Code: _____

Phone #: _____ Fax #: _____ E-mail: _____

9. IMPORTANT NOTICE TO APPLICANTS: The written consent of the property owner is required for all applications to be considered complete. Your application WILL NOT BE PROCESSED unless the Applicant **and** Owner Consent portion of the application is completed below. You have the obligation to apprise the Department of any changes to information provided in this application.

Application is hereby made for a Miami-Dade County Class IV permit to authorize the activities described herein. I agree to or affirm the following:

- I possess the authority to authorize the proposed activities at the subject property, and
- I am familiar with the information, data and plans contained in this application, and
- To the best of my knowledge and belief, the information, data and plans submitted are true, complete and accurate, and
- I will provide any additional information, evidence or data necessary to provide reasonable assurance that the proposed project will comply with the applicable State and County water quality standards both during construction and after the project is completed, and
- I am authorizing the permit agent listed in Section 2 of this application to process the application, furnish supplemental information relating to this application and bind the applicant to all requirements of this application, and
- I agree to provide access and allow entry to the project site to inspectors and authorized representatives of Miami-Dade County for the purpose of making the preliminary analyses of the site and to monitor permitted activities and adherence to all permit conditions.

RECEIVED

OCT 29 2012

DERM Wetlands Resources Section
Natural Resources Regulation & Restoration
Division (NRRRD)

A. IF APPLICANT IS AN INDIVIDUAL

Signature of Applicant | Print Applicant's Name | Date

B. IF APPLICANT IS OTHER THAN AN INDIVIDUAL OR NATURAL PERSON
(Examples: Corporation, Partnership, Trust, LLC, LLP, etc.)

Pedro Ramos	Federal Agency	Florida
Print Name of Applicant (Enter the complete name as registered)	Type (Corp, LLC, LLP, etc.)	State of Registration/Incorporation

Under the penalty of perjury, I certify that I have the authority to sign this application on behalf of the Applicant, to bind the Applicant, and if so required to authorize the issuance of a bond on behalf of the Applicant. (If asked, you must provide proof of such authority to the Department). ***Please Note: If additional signatures are required, pursuant to your governing documents, operating agreements, or other applicable agreements or laws, you must attach additional signature pages. ***

Signature of Authorized Representative	Pedro Ramos	Superintendent, BICY	
	Print Authorized Representative's Name	Title	Date

C. IF APPLICANT IS A JOINT VENTURE Each party must sign below (If more than two members, list on attached page)

Print Name of Applicant (Enter the complete name as registered)	Type (Corp, LLC, LLP, etc.)	State of Registration/Incorporation
Print Name of Applicant (Enter the complete name as registered)	Type (Corp, LLC, LLP, etc.)	State of Registration/Incorporation

Under the penalty of perjury, I certify that I have the authority to sign this application on behalf of the Applicant, to bind the Applicant, and if so required to authorize the issuance of a bond on behalf of the Applicant. (If asked, you must provide proof of such authority to the Department). ***Please Note: If additional signatures are required, pursuant to your governing documents, operating agreements, or other applicable agreements or laws, you must attach additional signature pages. ***

Signature of Authorized Representative	Print Authorized Representative's Name	Title	Date
Signature of Authorized Representative	Print Authorized Representative's Name	Title	Date

10. WRITTEN CONSENT OF THE PROPERTY OWNER FOR THE PROPOSED WORK LOCATION

I/We are the fee simple owner(s) of the real property located at the Boundary Line Trail Head in Miami-Dade County, Florida, otherwise identified in the public records of Miami-Dade County as Folio No. 3045190000070, 3045190000018, 3045190000090, 3045190000060. I am aware and familiar with the contents of this application for a Miami-Dade County Class IV Permit to perform the work on the subject property, as described in Section 4 of this application. I hereby consent to the work identified in this Class IV Permit application.

A. IF THE OWNER IS AN INDIVIDUAL

Signature of Owner | Print Owner's Name | Date

Signature of Owner | Print Owner's Name | Date

B. IF THE OWNER IS OTHER THAN AN INDIVIDUAL OR NATURAL PERSON
(Examples: Corporation, Partnership, Joint Venture, Trust, LLC, LLP, etc.)

Pedro Ramos	Federal Agency	Florida
Print Name of Applicant (Enter the complete name as registered)	Type (Corp, LLC, LLP, etc.)	State of Registration/Incorporation

33100 Tamiami Trail East/ Ochopee, FL, 34141
Address of Owner

Under the penalty of perjury, I certify that I have the authority to sign this application on behalf of the Owner, to bind the Owner, and if so required to authorize the issuance of a bond on behalf of the Owner. (If asked, you must provide proof of such authority to the Department). ***Please Note: If additional signatures are required, pursuant to your governing documents, operating agreements, or other applicable agreements or laws, you must attach additional signature pages. ***

	Pedro Ramos	Superintendent, BICY	
Signature of Authorized Representative	Print Authorized Representative's Name	Title	Date

Signature of Authorized Representative | Print Authorized Representative's Name | Title | Date

Please Review Above

Appropriate signature(s) must be included in:

Box 9: either A, B **or** C

AND

Box 10: either A **or** B

RECEIVED
OCT 29 2012
DERM Wetlands Resources Section
Natural Resources Regulation & Restoration
Division (NRRRD)

Class IV Permit Application Additional Signatures Page

(Please attach to Class IV permit application)

Applicant Name: _____

Owner Name: _____

Project Location: _____

Additional signatures for: ☐ **Applicant** ☐ **Owner**

1. **IF THE APPLICANT/OWNER IS AN INDIVIDUAL**

Signature of Applicant/Owner | Print Name of Applicant/Owner | Date

Signature of Applicant/Owner | Print Name of Applicant/Owner | Date

2. **IF THE APPLICANT/OWNER IS OTHER THAN AN INDIVIDUAL OR NATURAL PERSON**
(Examples: Corporation, Partnership, Trust, LLC, LLP, etc.)

Print Name of Applicant/Owner (Enter the complete name as registered) | Type (Corp, LLC, LLP, etc.) | State of Registration/Incorporation

Under the penalty of perjury, we certify that we have the collective authority to sign this application on behalf of the Applicant/Owner, to bind the Applicant/Owner, and if so required to authorize the issuance of a bond on behalf of the Applicant/Owner. (If asked, you must provide proof of such authority to the Department). ***Please Note: If additional signatures are required, pursuant to your governing documents, operating agreements, or other applicable agreements or laws, you must attach additional signature pages. ***

Signature	Print Name	Title	Date

RECEIVED
OCT 29 2012
DERM Wetlands Resources Section
Natural Resources Regulation & Restoration
Division (RNRD)

RECEIVED

JAN 17 2013

DERM Wetlands Resources Section
Natural Resources Regulation & Restoration
Division (NRRRD)

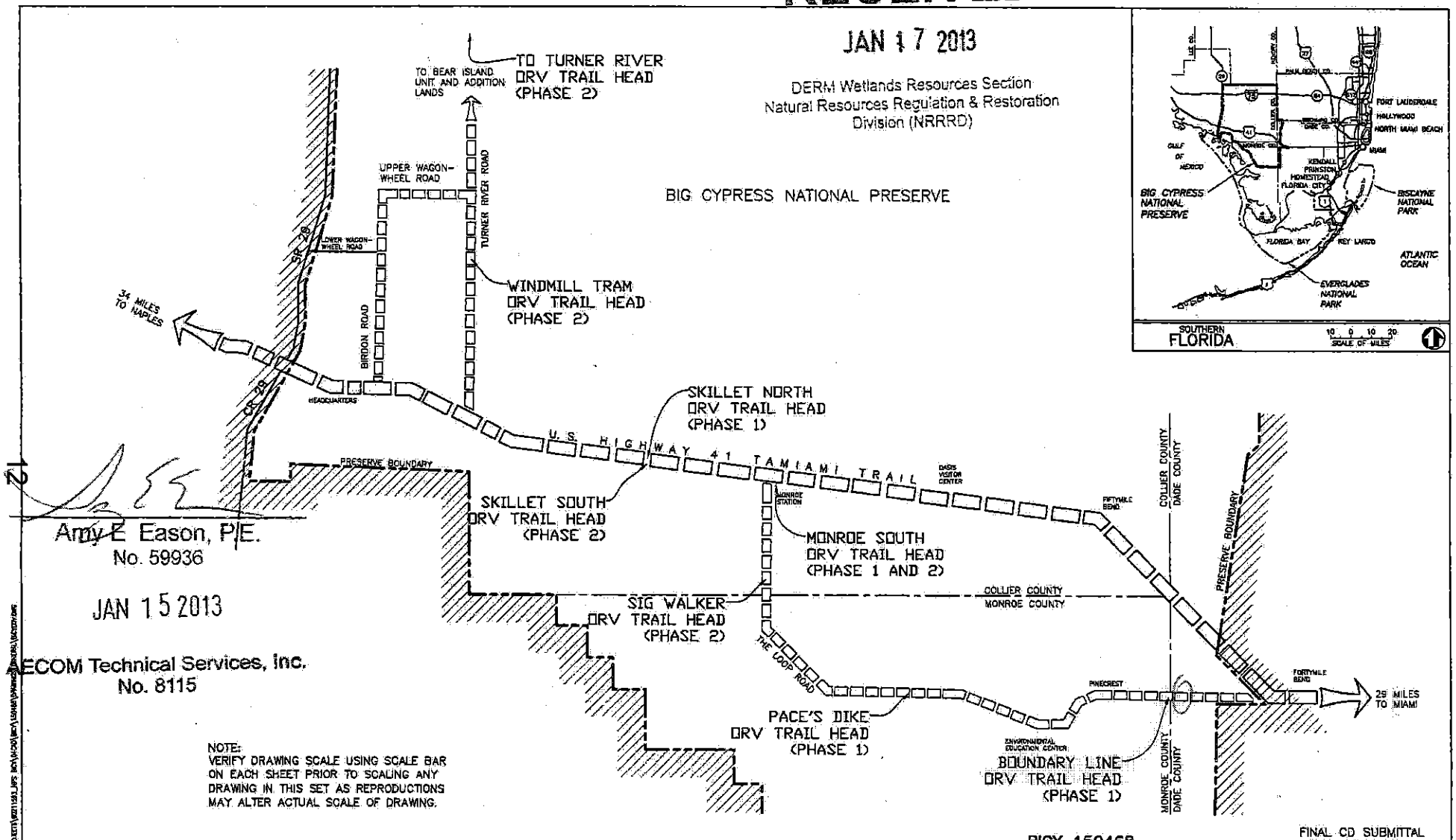

Amy E. Eason, P.E.
No. 59936

JAN 15 2013

ECOM Technical Services, Inc.
No. 8115

NOTE:
VERIFY DRAWING SCALE USING SCALE BAR ON EACH SHEET PRIOR TO SCALING ANY DRAWING IN THIS SET AS REPRODUCTIONS MAY ALTER ACTUAL SCALE OF DRAWING.

BICY 150468

FINAL CD SUBMITTAL
JULY 13, 2012

Mark	Sheet	REVISION	Date	Initial

QUALITY DESIGN CERTIFICATION
Prepared in Accordance with Design Development (Title I) Drawing No.
OR
Variance from Design Development (Title I) Approved by Superintendent on Date
OR
Construction Drawing Not Prepared by Design Development (Title I)
Project Manager Date

CONSTRUCTION DRAWINGS
UNITED STATES
DEPARTMENT OF THE INTERIOR
NATIONAL PARK SERVICE
DENVER SERVICE CENTER

TITLE OF PROJECT
ORV TRAILHEADS
LOCATION WITHIN PARK
PARK GENERAL
NAME OF PARK
BIG CYPRESS NATIONAL PRESERVE
REGION SOUTHEAST | COUNTY COLLIER MONROE | STATE FLORIDA

DRAWING NO. 176
115616
PMIS/PKG. NO. 150468
SHEET 1 OF 97

BASIC DATA:

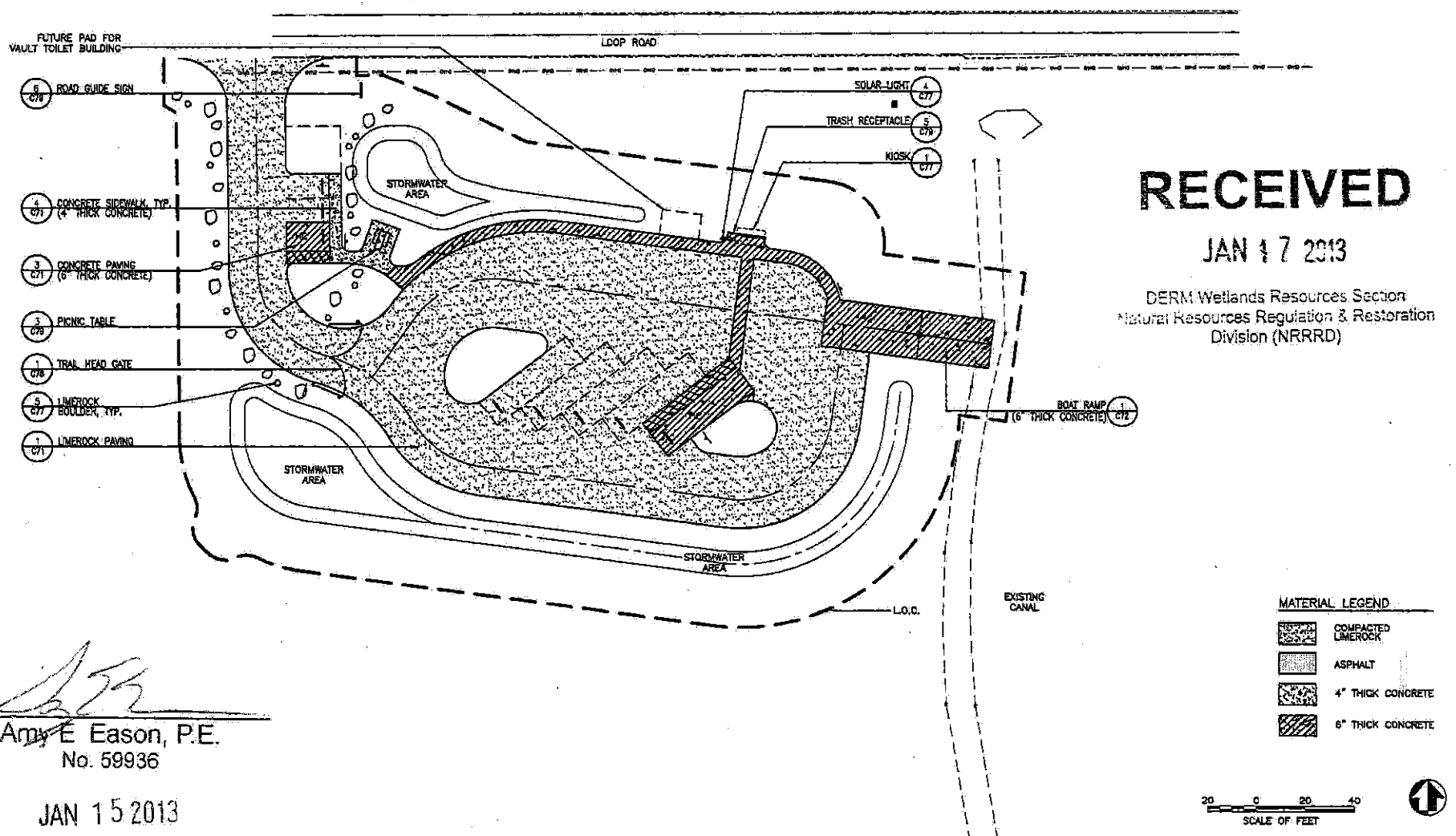

RECEIVED

JAN 17 2013

DERM Wetlands Resources Section
Natural Resources Regulation & Restoration Division (NRRRD)

Amy E Eason, P.E.
No. 59936

JAN 15 2013

AECOM Technical Services, Inc.
No. 8115

A/E FIRM:	DESIGNED:	SUB SHEET NO.	TITLE OF SHEET	DRAWING NO.
PRIME AECOM ORLANDO, FL	CP/JRH	C16	SITE PLAN	176
SUBCONTRACTOR N/A	CHECKED NOK		BIG CYPRESS NATIONAL PRESERVE BOUNDARY LINE	115616
	TECH. REVIEW:			PMIS/PKG NO. 150468
	DATE: 07/13/12			SHEET 24 OF 97

13

RECEIVED
JAN 17 2013
DERM Wetlands Resources Section
Natural Resources Regulation & Restoration
Division (NRRRD)

Amy E. Eason, P.E.
No. 59936

JAN 15 2013
AECOM Technical Services, Inc.
No. 8115

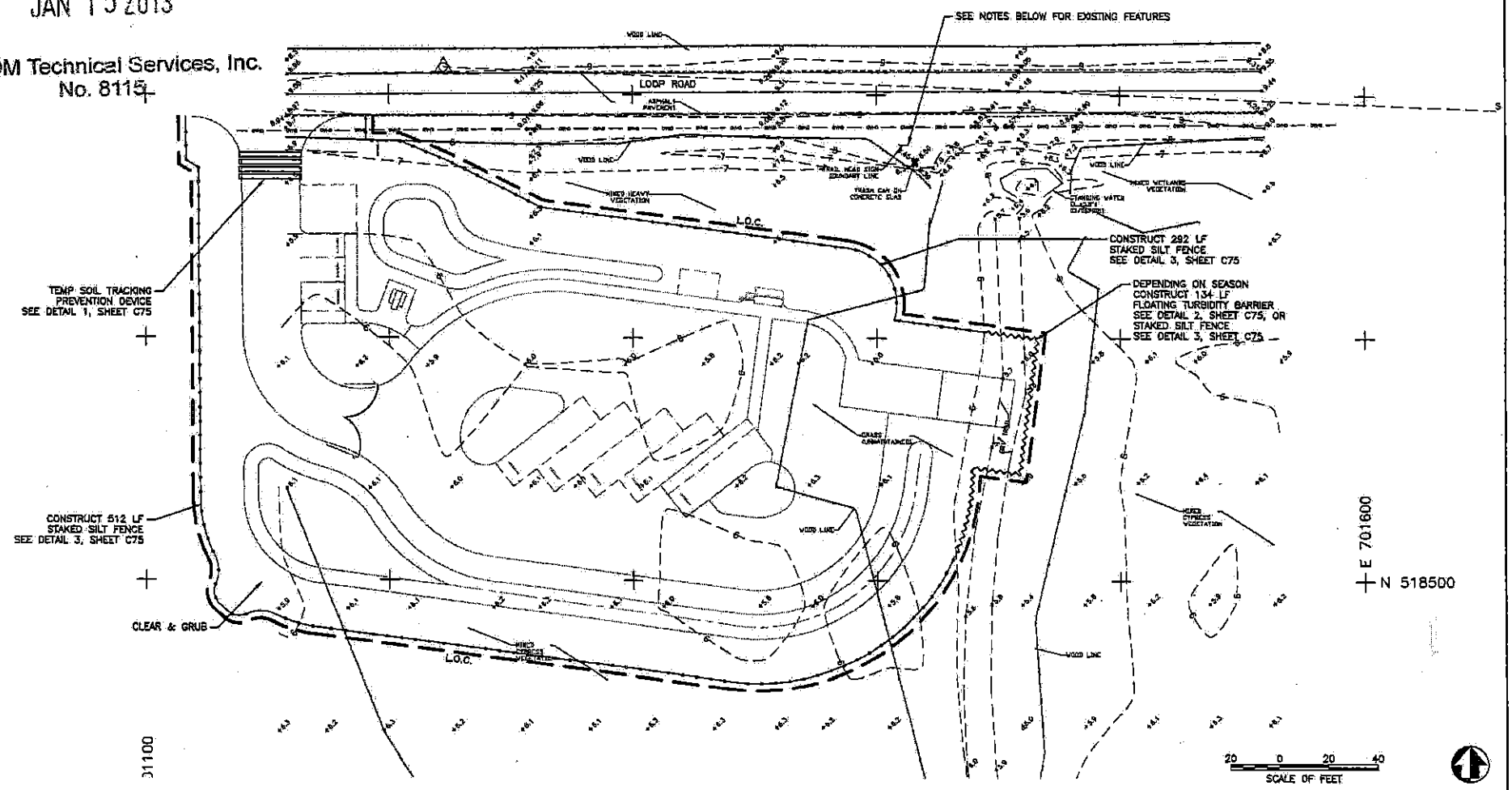

BMP LEGEND

- STAKED SILT FENCE
- FLOATING TURBIDITY BARRIER
- BARRIER TO BE DETERMINED BASED ON TIME OF SEASON

NOTES:

1. ALL EXISTING SIGNS, BOLLARDS, GUARDRAIL AND GATE ARE TO BE REMOVED.
2. NO BURNING OF SITE DEBRIS.
3. EROSION CONTROL MEASURES SHALL BE IN PLACE PRIOR TO CONSTRUCTION.
4. ALL EROSION CONTROL DEVICES SHALL BE REMOVED FOLLOWING CONSTRUCTION AND ACCEPTANCE.

AREA TO BE CLEARED = 1.42 AC

A/E FIRM: PRIME: AECOM ORLANDO, FL. SUBCONTRACTOR: N/A	DESIGNED: A. EASON; CHKD: R.F.; TECH. REVIEW: ; DATE: 07/13/12	SUB SHEET NO. C18	TITLE OF SHEET: DEMOLITION & EROSION CONTROL PLAN — BIG CYPRESS NATIONAL PRESERVE BOUNDARY LINE

DRAWING NO. 176 / 115616
PWS/PKG NO. 150468
SHEET 26 OF 97

RECEIVED
JAN 17 2013
DERM Wetlands Resources Section
Natural Resources Regulation & Restoration
Division (NRRRD)

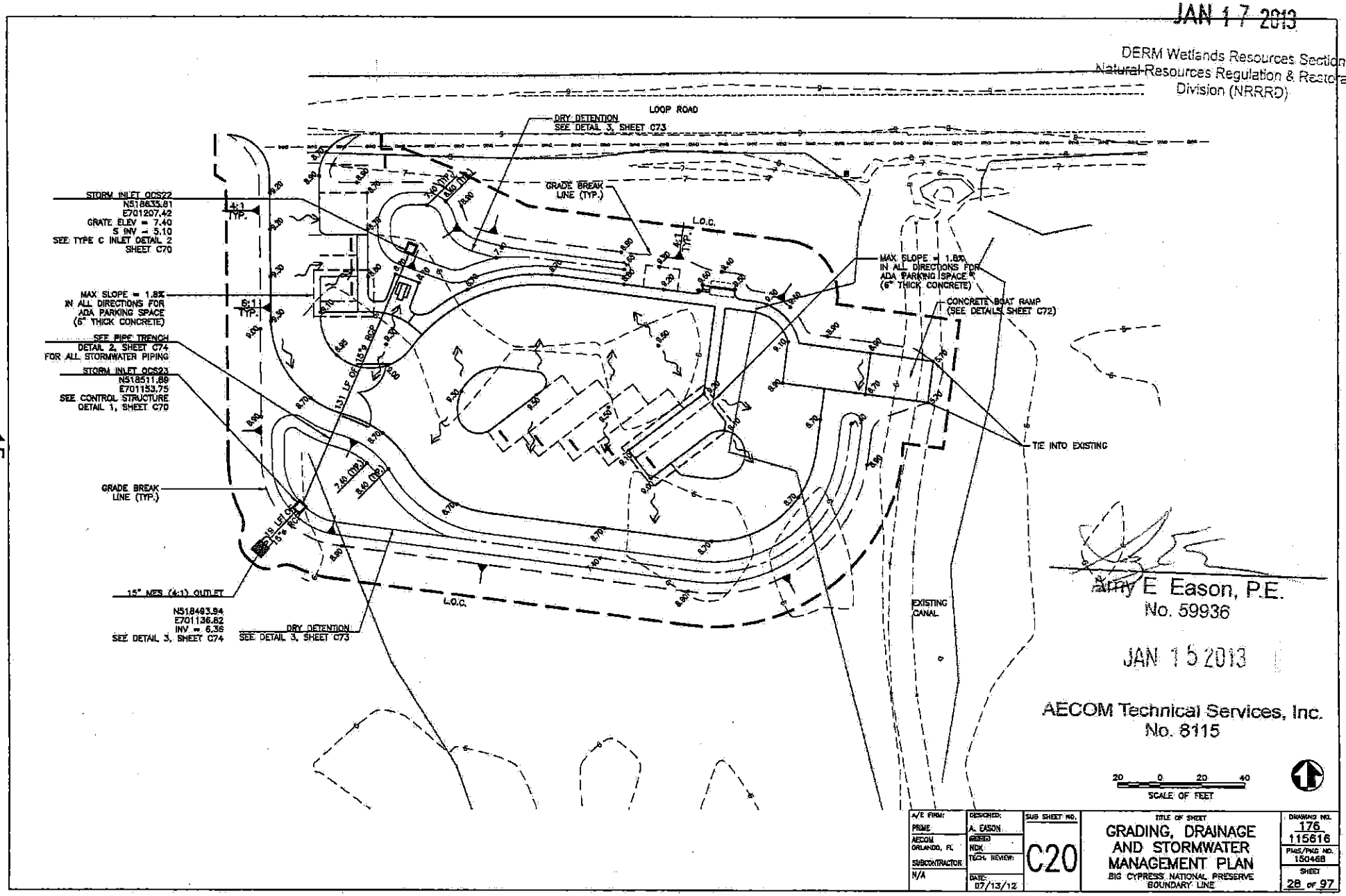

RECEIVED
JAN 17 2013
DERM Wetlands Resources Section
Natural Resources Regulation & Restoration
Division (NRRRD)

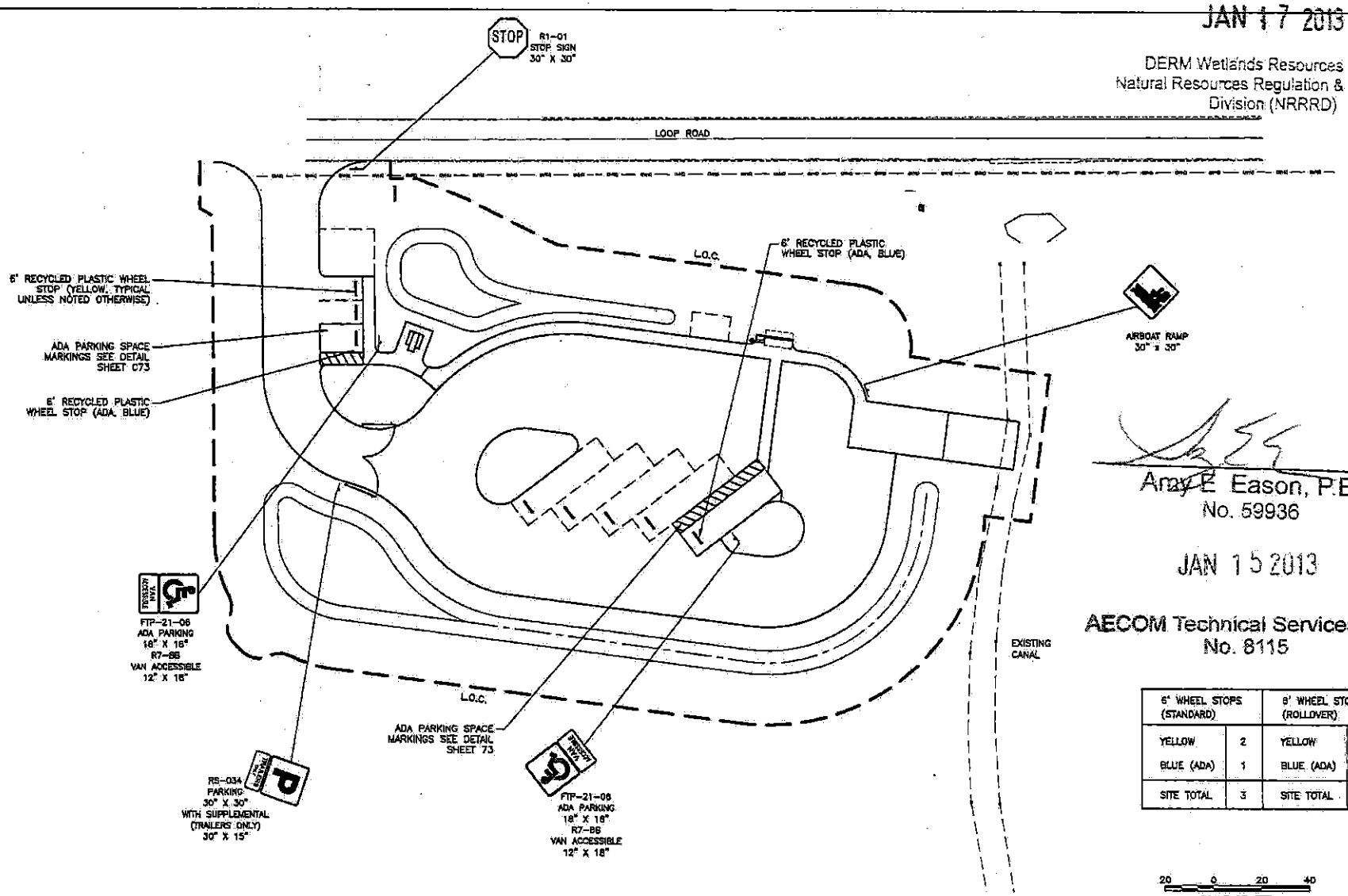

Amy E. Eason, P.E.
No. 59936

JAN 15 2013

AECOM Technical Services, Inc.
No. 8115

6" WHEEL STOPS (STANDARD)		8' WHEEL STOPS (ROLLOVER)	
YELLOW	2	YELLOW	4
BLUE (ADA)	1	BLUE (ADA)	1
SITE TOTAL	3	SITE TOTAL	5

A/E FIRM:	DESIGNED:	SUB SHEET NO.	TITLE OF SHEET	DRAWING NO.
PRIME: AECOM ORLANDO, FL	A. EASON	C21	SIGNING AND PAVEMENT MARKING PLAN	176
SUBCONTRACTOR: N/A	CHECKED: NDK		BIG CYPRESS NATIONAL PRESERVE BOUNDARY LINE	115616
	TECH. REVIEW:			PWIS/PKG NO. 150486
	DATE: 07/13/12			SHEET 29 OF 97

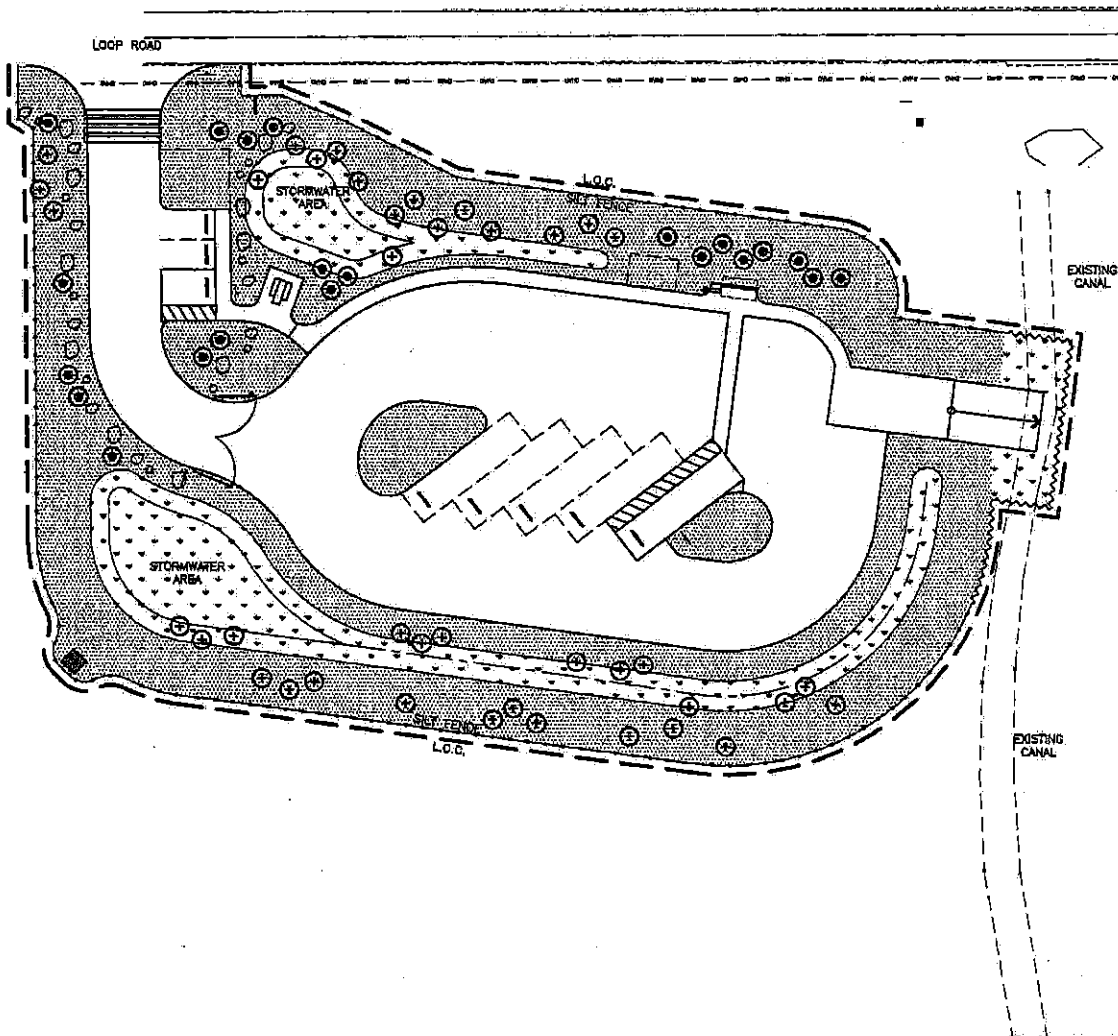

RECEIVED

JAN 17 2013

DERM Wetlands Resources Section
Natural Resources Regulation & Restoration
Division (NRRRD)

Arnw E Eason, P.E.
No. 59936

JAN 15 2013

AECOM Technical Services, Inc.
No. 8115

LANDSCAPE LEGEND		QTY.
MESIC PLANTING MIX	1 L1	23,780 SF
HYDRIC PLANTING MIX	2 L1	10,575 SF
TAXODIUM DISTICHUM BALD CYPRESS, 7 GAL.		82
TAXODIUM ASCENDENS POND CYPRESS, 7 GAL.		27

20 0 20 40
SCALE OF FEET

A/E FIRM: FRAME AECOM ORLANDO, FL	DESIGNED: GP/JRH	SUB SHEET NO.	TITLE OF SHEET	DRAWING NO. 176
SUBCONTRACTOR N/A	DRAWN: NDK	L3	LANDSCAPE PLAN	115616
	TECH. REVIEW:		BIG CYPRESS NATIONAL PRESERVE BOUNDARY LINE	PMIS/PKG NO. 150466
	DATE: 07/13/12			SHEET 30 OF 97

17

RECEIVED
JAN 17 2013
DERM Wetlands Resources Section
Natural Resources Regulation & Restoration
Division (NRRRD)

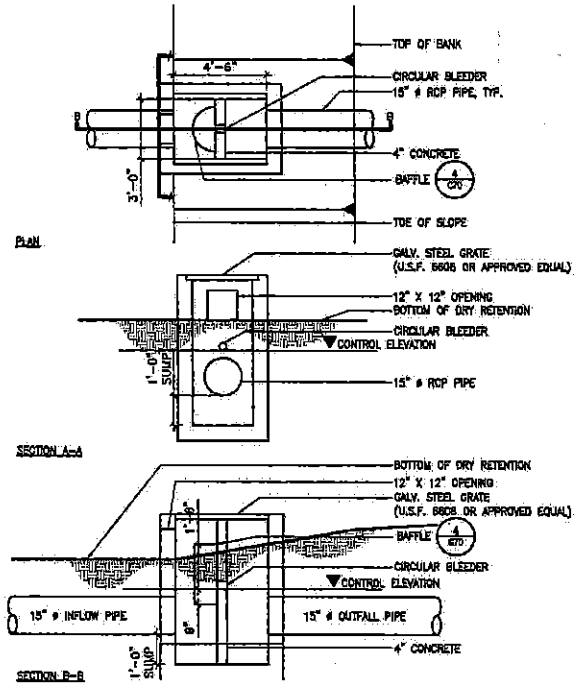

1 CONTROL STRUCTURE – MODIFIED DITCH BOTTOM INLET TYPE E

NOTE: SEE TABLE 1 FOR SITE SPECIFIC INFORMATION

HORIZONTAL WALL REINFORCING SCHEDULE (TABLE 1)

WALL DEPTH	SCHEDULE	AREA (in.²/ft.)	MAX. SPACING BARS	MAX. SPACING WWF
0'-15'	A12	0.20	12"	8"

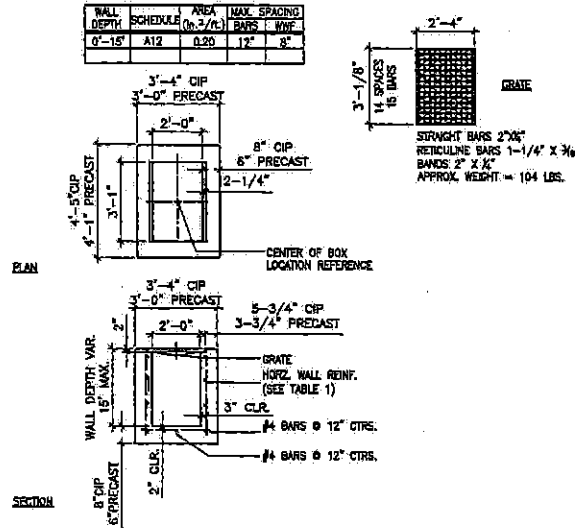

2 DITCH BOTTOM INLET TYPE C

HORIZONTAL WALL REINFORCING SCHEDULE (TABLE 2)

WALL DEPTH	SCHEDULE	AREA (in.²/ft.)	MAX. SPACING BARS	MAX. SPACING WWF
0'-8'	A12	0.20	12"	8"
0'-7.5'	A8	0.20	8"	8"
7.5'-10'	B5.5	0.24	5-1/2"	5"
10'-15'	C8.5	0.37	8-1/2"	6"

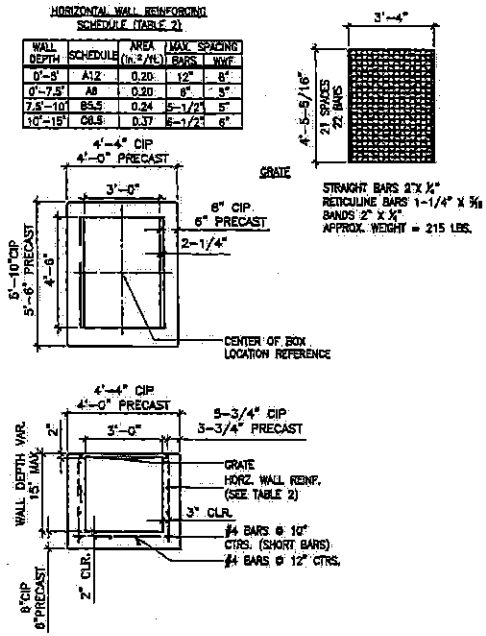

3 DITCH BOTTOM INLET TYPE E

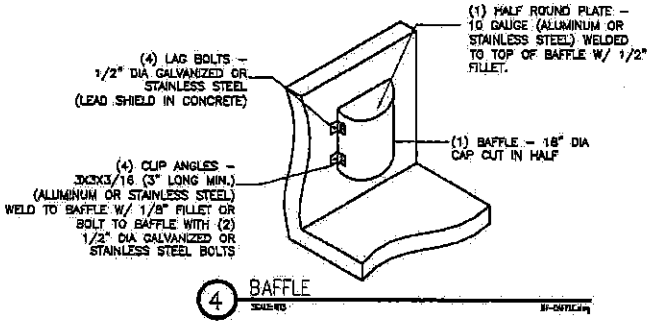

4 BAFFLE

TABLE 1

CONTROL STRUCTURE INFORMATION TABLE-SEE DETAILS THIS SHEET

Site Name	Structure Label	Control Elevation	Circular Bleeder Invert Elev.	Circular Bleeder Diameter	12"x12" Opening Invert Elev.	Inflow Pipe Invert Elev.	Outfall Pipe Invert Elev.	Structure Grate Invert Elev.
Boundary Line	OCS23	6.40	6.40	3.0"	7.40	4.85	6.40	8.90
Monroe South	OCS15	5.00	5.00	4.25"	6.00	2.37	4.50	7.95
Pace's Dike	OCS20	5.50	5.50	3.0"	6.50	3.94	2.16	8.30
Skillet North	OCS7	3.90	3.90	3.0"	4.90	2.13	3.90	6.50
Skillet South	OCS10	3.90	3.90	3.0"	4.90	2.03	2.90	6.70
Sig Walker	OCS18	4.30	4.30	3.0"	5.30	2.66	4.30	6.70
Turner River	OCS3	11.50	11.50	3.0"	12.50	9.71	8.55	14.20
Windmill (rap)	OCS6	5.00	5.00	3.0"	6.00	3.16	2.78	7.70

Amy E. Eason, P.E.
No. 59936

JAN 15 2013

A/E FIRM: PRIME AECOM ORLANDO, FL SUBCONTRACTOR N/A	DESIGNED: A. EASON; DRAWN: NDK; TECH. REVIEW: ; DATE: 07/13/12	SUB SHEET NO. C70	TITLE OF SHEET STANDARD DETAILS BIG CYPRESS NATIONAL PRESERVE	DRAWING NO. 176 115616; PMIS/PKG NO. 150468; SHEET 86 of 97

AECOM Technical Services, Inc.
No. 8115

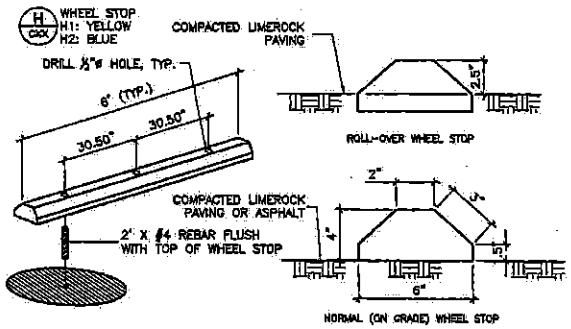

1 WHEEL STOP

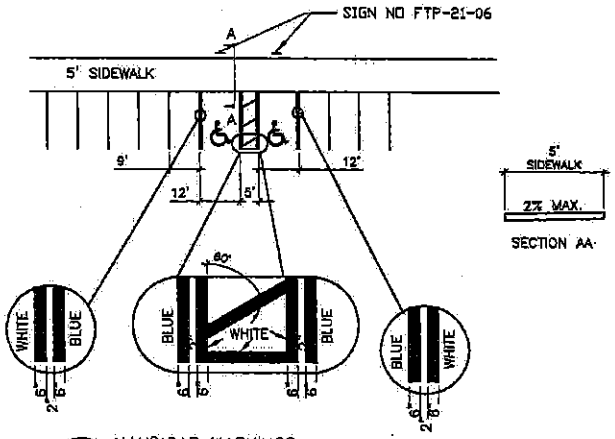

2 HANDICAP MARKINGS

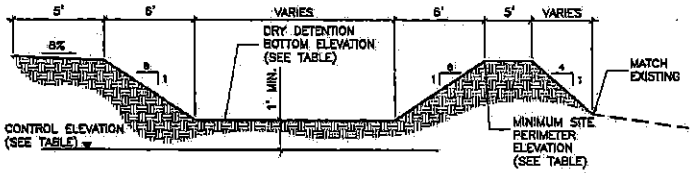

NOTE:
SEE TABLE 2 FOR SITE SPECIFIC INFORMATION

3 DRY DETENTION

TABLE 2

DRY DETENTION INFORMATION TABLE-SEE DETAIL THIS SHEET			
Site Name	Control Elevation	Dry Detention Bottom Elevation	Minimum Site Perimeter Elevation
Boundary Line	8.40	7.40	8.89
Monroe South	5.00	6.00	7.85
Paco's Dike	5.50	6.50	8.28
Skillet North	3.90	4.90	6.48
Skillet South	3.90	4.90	6.69
Sig Walker	4.30	5.30	6.68
Turner River	11.50	12.50	14.18
Windmill Trail	5.00	6.00	7.72

RECEIVED
JAN 17 2013
DERM Wetlands Resources Section
Natural Resources Regulation & Restoration Division (NRRRD)

Amy E Eason, P.E.
No. 59936

JAN 15 2013

AECOM Technical Services, Inc.
No. 8115

A/E FIRM:	DESIGNED:	SUB SHEET NO.	TITLE OF SHEET	DRAWING NO.
PRIME: AECOM ORLANDO, FL	A. EASON	C73	STANDARD DETAILS	175 115616
SUBCONTRACTOR: N/A	CHECKED: NOK		BIG CYPRESS NATIONAL PRESERVE	PWS/PKG NO. 150468
	TECH. REVIEW:			SHEET 89 of 97
	DATE: 07/13/12			

Key Map

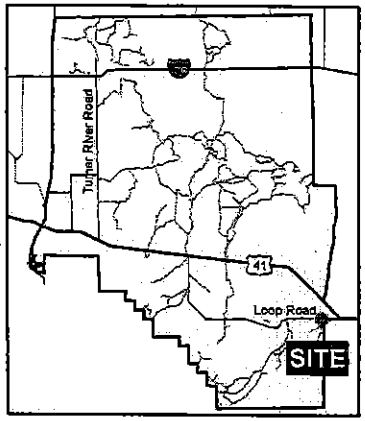

Legend

- Project Boundary
- Wetland BL-1
- 25' Secondary Wetland Impact Zone
- Vegetative Community

Sources

AECOM, 2012, Impact Area
AECOM, 2012, Vegetation
Google Earth, 2011, Aerial Photography

1 inch = 50 feet

0 50 Feet

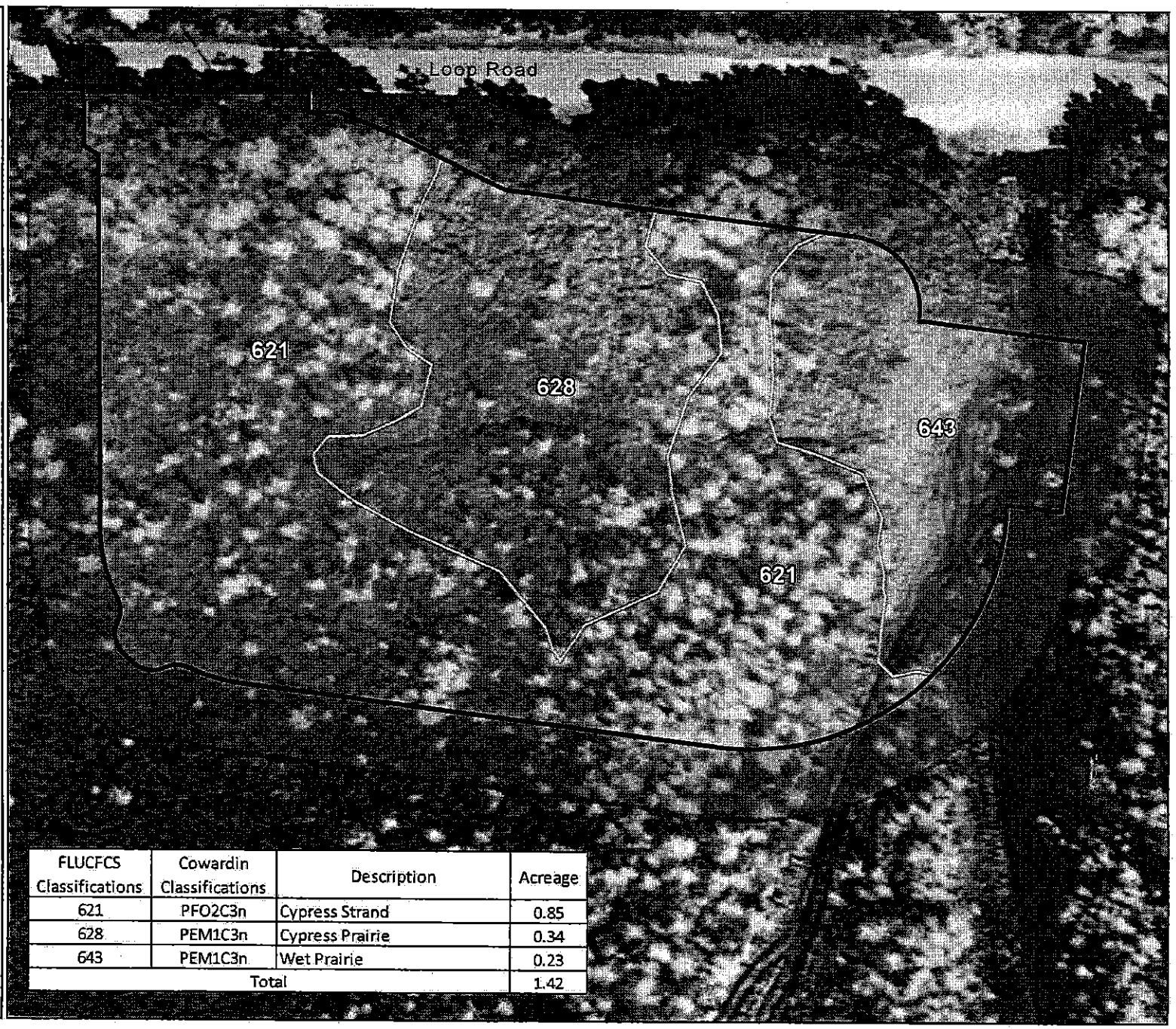

FLUCFCS Classifications	Cowardin Classifications	Description	Acreage
621	PFO2C3n	Cypress Strand	0.85
628	PEM1C3n	Cypress Prairie	0.34
643	PEM1C3n	Wet Prairie	0.23
Total			1.42

Figure 5

Vegetative Communities | Boundary Line Trail Head

Key Map

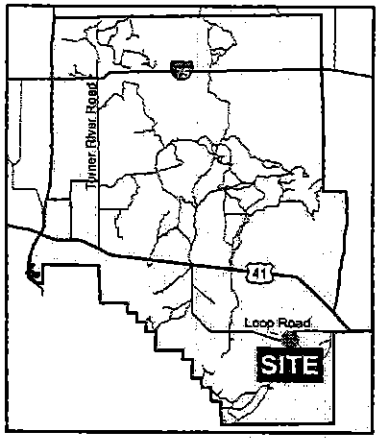

FLUCFCS Classification	Cowardin Classification	Description	Acreage
625	PFO4C3n	Hydric Pine	0.09
628	PEM1C3n	Cypress Prairie	0.64
643	PEM1C3n	Wet Prairie	4.95
740	NA	Disturbed Area	1.24
Total			6.92

Legend

- Project Boundary
- Wetland GFP-1
- Proposed Mitigation Area 2.10 acres
- Vegetative Community

Sources

AECOM, 2012, Mitigation Area
AECOM, 2012, Vegetation
Bing ArcGIS Online, 2011, Aerial Photograph

1 inch = 125 feet

0 125 Feet

Figure 3

Vegetative Communities | Golightly Fill Pad

Attachment B

Applicant's/Agent's Letter
Engineer's Certification Letter

AECOM

AECOM
3550 S.W. Corporate Parkway
Palm City, Florida 34990
www.aecom.com

772 286 3883 tel
772 286 3925 fax

ENGINEER LETTER OF CERTIFICATION

Miami-Dade County Department of Regulatory and Economic Resources
Coastal and Wetlands Resources Section
701 NW 1st Court, Suite 600
Miami, Florida 33136

RE: Class IV Short/Standard Form Permit Application Number CLIV2012-0047

Ladies and Gentlemen:

This letter will certify that I am an engineer registered/licensed in the State of Florida, qualified by education and experience in the area of construction, and that to the best of my knowledge and belief, the proposed work does not violate any laws of the State of Florida or any provision of the Code of Miami Dade County which may be applicable, that diligence and recognized standard practices of the engineering profession have been exercised in the engineer's design process for the proposed work, and in my opinion based upon my knowledge and belief, the following will not occur:

a. Harmful obstruction or undesirable alteration of the natural flow of the water within the area of the proposed work.

b. Harmful or increased erosion, shoaling of channels or stagnant areas of water. (Not applicable to class IV permits)

c. Material injury to adjacent property.

d. Adverse environmental impacts from changes in water quality or quantity. (Applicable to class IV permits only)

Further, I have been retained by the applicant to provide inspections throughout the construction period and to prepare a set of reproducible record prints of drawings showing changes made during the construction process based upon the marked-up prints, drawings, and other data furnished by the contractor to me.

Sincerely,

Amy E. Eason, P.E. (#59936)
11-20-12

PERMIT APPLICANT/ AUTHORIZED AGENT STATEMENT

Date: October 5, 2012

Miami Dade County Department of Regulatory and Economic Resources
Coastal and Wetlands Resources Section
701 NW 1st Court
Miami FL, 33136

Re: Class IV Standard Form Permit Application Number

By the attached Class IV Standard Form permit application ~~with supporting documents~~, I, Kelley Peterman, am the Permit Applicant/Applicant's Authorized Permit Agent (circle one) and hereby request permission to perform the work ~~associated with Class IV~~ permit application _____. I understand that a Miami-Dade County Class IV Standard Form Permit is required to perform this work.

If approval is granted for the proposed work by the Board of County Commissioners, complete and detailed plans and calculations of the proposed work shall be prepared by an engineer registered/licensed in the State of Florida in accordance with the minimum requirements of Chapter 24 of the Code of Miami-Dade County, Florida. Said plans and calculations shall be subject to the review and approval of the Department of Regulatory and Economic Resources. The permit applicant will secure the services of an engineer registered/licensed in the State of Florida to conduct inspections throughout the construction period, and said engineer shall prepare all required drawings of record.

Respectfully submitted,

Kelley Peterman

_____
Kelley Peterman
Applicant's Authorized Permit Agent

Attachment C

Zoning Approval Letter
RER Water Control's Cut & Fill Approval

Memorandum

MIAMI-DADE COUNTY

Date: November 2, 2012

To: Johanna Velasquez, Biologist II
Environmental Resources Management Division
Coastal and Wetland Resources Section
Department of Regulatory and Economic Resources

From: Eric Silva, AICP, Assistant Director
Development Services Division
Regulatory and Economic Resources Department

Subject: Class CLIV Permit Application CLIV 20120047
Property at the Boundary Line Trail head South of Loop Road

The proposed usage of the property upon which the proposed work would occur does not violate any zoning law applicable to the area of the proposed work.

If you have any questions regarding this matter, please contact Fred Endara at extension (305) 375-3866.

ES/FE

RECEIVED
NOV 15 2012
DERM Wetlands Resources Section
Natural Resources Regulation & Restoration
Division (NRRRD)

Voight, Paul (RER)

Subject: FW: Response Wetland determination CLIV-20120047

From: De Torres, Mayra (RER)
Sent: Monday, October 29, 2012 11:08 AM
To: Spinelli, Michael (RER)
Cc: Velasquez, Johanna (RER); Molina, Maria, P.E. (RER)
Subject: FW: Response Wetland determination CLIV-20120047

Good Morning,
See below the Water Control Section comment for the proposed Class IV-20120047.
If you have any question, please contact Maria Molina or myself.

Mayra De Torres, Engineer I
Department of Regulatory and Economic Resources
Environmental Resources Management
701 NW 1st Court, 6th Floor, Miami, Florida 33136
(305) 372-6638 (305) 372-6489 fax
http://www.miamidade.gov/economy
"Delivering Excellence Every Day"

From: Molina, Maria, P.E. (RER)
Sent: Monday, October 29, 2012 10:15 AM
To: De Torres, Mayra (RER)
Subject: RE: Response Wetland determination CLIV-20120047

Minor changes

The Water Control has reviewed the proposed Class IV permit application entitled "ORV Trailheads, Big Cypress National Preserve" and offer the following comment:

"The proposed roadway within the jurisdiction of Miami-Dade County will require water quality treatment for the 5-year, 1-day storm event, prior to discharge into the wetland area, and provide fill encroachment criteria by setting aside unfilled retention area sufficient to retain the 100-year, 3-day storm event, to provide flood protection to calculated base flood elevation."
Applicant is advised if the proposed outfall will discharge into any water body within the Miami-Dade County limit, a Class II permit is required.

Please let me know.

Mayra De Torres, Engineer I
Department of Regulatory and Economic Resources
Environmental Resources Management
701 NW 1st Court, 6th Floor, Miami, Florida 33136
(305) 372-6638 (305) 372-6489 fax
http://www.miamidade.gov/economy
"Delivering Excellence Every Day"

Attachment D

Project Report

PROJECT REPORT

CLASS IV PERMIT APPLICATION NO. CLIV2012-0047

Class IV Permit Application by the National Park Service Requesting Authorization to Fill 1.42 Acres of Wetlands for Parking and Various Amenities for Visitors to the Big Cypress National Preserve

January 22nd, 2013

Staff's recommendation of approval for the above-referenced project is based upon the applicable evaluation factors set forth in Section 24-48.3, Code of Miami-Dade County. The following is a summary evaluation of the proposed project with respect to each applicable evaluation factor:

1. Potential Adverse Environmental Impact – The proposed project will result in an adverse environmental impact to 1.42 acres of wetlands. However, the mitigation, as set forth in Number 14 below, will compensate for the loss of wetland values associated with the proposed project.

2. Potential Cumulative Adverse Environmental Impact –The proposed project will result in minimal cumulative adverse environmental impacts. However, the mitigation, as set forth in Number 14 below, will compensate for the loss of wetland values associated with the proposed project.

3. Hydrology - The proposed project, as designed, is not reasonably expected to adversely affect surface water drainage or retention of storm water.

4. Water Quality – The proposed project, as designed, is not reasonably expected to adversely affect applicable Miami-Dade County water quality standards.

5. Wellfields – The proposed project is not located within a Wellfield Protection Area.

6. Water Supply – The proposed project is not reasonably expected to adversely affect the water supply.

7. Aquifer Recharge – The proposed project is not reasonably expected to adversely affect aquifer recharge.

8. Aesthetics - The proposed project has been designed to provide the public a safe place to launch recreational vehicles into the Preserve and to provide safe parking and other amenities off of Loop Road while the public uses the Preserve for recreational purposes.

9. Navigation – Not applicable.

10. Public Health - The proposed project is not reasonably expected to adversely affect the public health.

11. Historic Values – The proposed project is not reasonably expected to adversely affect historic values.

12. Archaeological Values – There is no known archaeological site located within the boundaries of this application.

13. Air Quality – The proposed project is not reasonably expected to adversely affect air quality.

14. Marine and Wildlife Habitats - The proposed project seeks approval for impacts from the proposed filling of 1.42 acres of wetlands. The wetlands that will be impacted within the project site are historically characterized as cypress strand and wet prairie. Cypress wetlands are the dominant cover type within the trail head. For this project, 0.85 acres of Cypress Strand, 0.34 acres of Cypress Prairie and 0.23 acres of Wet Prairie will be impacted. Compensatory mitigation for the ecological impacts related to the loss of these wetland functions will be accomplished by the restoration of a 2.10-acre fill pad located four miles from the Boundary Line trail head in Monroe County and known as the Golightly Fill Pad. In addition, the NPS has agreed to follow the U.S. Fish and Wildlife Service's *Standard Protection Measures of the Eastern Indigo Snake* (FWS 2004) during construction and purchase off-site mitigation credits to compensate for impacts to habitat occupied by the wood stork and Florida panther. Specifically, the NPS is purchasing 71.43 Panther Habitat Units with their associated Wood Stork component from the Florida Panther Conservation, II Bank located in Monroe County for the improvements to all four recreational access points.

15. Wetland Soils Suitable for Habitat - The proposed project will result in the permanent removal of wetland soils. However, the mitigation, as set forth in Number 14, has resulted in the creation of wetlands by removing a fill pad, thereby promoting re-vegetation with native wetland plant species and soil-vegetative interactions.

16. Floral Values - The proposed project will impact herbaceous wetlands. However, the mitigation, as set forth in Number 14 above, will provide for the restoration and preservation of native wetland vegetation appropriate for promoting the natural ecosystem.

17. Faunal Values - The proposed project will disturb native wildlife habitat. However, the mitigation, as set forth in Number 14 above, will provide for high quality habitat for native fauna.

18. Rare, Threatened and/or Endangered Species – Impacts to habitat suitable for the federally listed Florida panther, wood stork and eastern indigo snake will occur as a result of the proposed improvements. To minimize adverse effects to these species, NPS has agreed to follow The U.S. Fish and Wildlife Service's *Standard Protection Measures for the Eastern Indigo Snake* (FWS 2004) during construction and purchase off-site mitigation credits to compensate for impacts to habitat occupied by the wood stork and the Florida panther.

19. Natural Flood Damage Protection - The water management features of the project have been reviewed by RER's Water Control Section and are in compliance with RER's criteria for development in this area. (See attachment C).

20. Wetland Values – The proposed project seeks approval to fill 1.42 acres of wetlands. The wetlands proposed to be impacted within the project site are characterized as cypress prairie, cypress strand and wet prairie. Cypress wetlands are the dominant cover type within the trail head, approximately 1.19 acres. The remaining wetland area, approximately 0.23 acres, consists of cypress prairie and wet prairie. The mitigation set forth in Number 14 above will compensate for the loss of wetland values associated with the proposed project.

21. Land Use Classification –The Planning and Zoning Department for Miami-Dade County has determined that the proposed usage does not violate any zoning law applicable to the area of the proposed work. (See Attachment C)

22. Recreation – The proposed project does not conflict with the recreation elements of the Miami-Dade County Comprehensive Development Master Plan and/or the Biscayne Bay Management Plan.

23. Other Environmental Values Affecting the Public Interest – There are no other known environmental factors that will affect the public interest.

24. Standard Construction Procedures and Practices and Design and Performance Standards – In the opinion of RER, the proposed project complies with the standard construction procedures and practices and design and performance standards of the applicable portions of the following:
    a. Miami-Dade County Public Works Manual
    b. Chapter 33B of the Code of Miami-Dade County

25. Comprehensive Environmental Impact Statement (CEIS) - In the opinion of the Director, the proposed mitigation plan will compensate for the loss of wetland values associated with the proposed project. As such, a CEIS was not required by RER to evaluate the proposed project.

26. Conformance with All Applicable Federal and State Laws and Regulations – In the opinion of RER, the proposed project is in conformance with the following applicable State, Federal and local laws and regulations:
    a. United States Clean Water Act (US Army Corps of Engineers and USEPA)
    b. Federal Endangered Species Act (US Fish & Wildlife Service)
    c. Florida Department of Environmental Protection Regulations
    d. Chapter 24 of the Code of Miami-Dade County
    e. Rules of the South Florida Water Management District
    f. Basis of Review for Surface Water Management Permit Applications Within the South Florida Water Management District

27. Conformance with the Miami-Dade County Comprehensive Development Master Plan (CDMP) – In the opinion of RER, the proposed land use is consistent with the CDMP. Specifically, the proposed project complies with the following CDMP Elements and Policies:

LAND USE ELEMENT:

Objective 1 – Growth management - The proposed project is generally consistent with the goals, objectives and policies contained in the Conservation, Aquifer Recharge and Drainage Element.

Objective 3/Policies 3B, 3C - Protection of natural resources and systems - The proposed project is compatible with surrounding land uses and it is consistent with all applicable environmental regulations, as well as all other elements of the CDMP. In addition, the project is in compliance with rules of the Florida Administrative Code which governs the land use in the Big Cypress area where this project will occur.

CONSERVATION, AQUIFER RECHARGE AND DRAINAGE ELEMENT:

Objective 2/Policy 2A – Protection of ground and surface water resources – The proposed project adheres to all relevant storm water management criteria.

Objective 3/Policies 3A, 3B, 3D - Wellfield protection areas - The proposed project is not located within a Wellfield protection area.

Objective 3/Policy 3E - Limestone mining within the area bounded by the Florida Turnpike, the Miami-Dade/Broward Levee, NW 12 Street and Okeechobee Road - The proposed project is not located within the above referenced area.

Objective 4/Policies 4A, 4B, 4C - Water storage, aquifer recharge potential and maintenance of natural surface water drainage - The proposed project is not reasonably expected to adversely affect water storage, aquifer recharge potential, or natural surface water drainage.

Objective 5/Policies 5A, 5B, 5F - Flood protection and cut and fill criteria - The water management features of the proposed project have been reviewed by RER's Water Control Section and are in compliance with RER's criteria for development in this area.

Objective 6/Policy 6A - Areas of highest suitability for mineral extraction - The proposed project is not located in an area proposed or suitable for mineral extraction.

Objective 6/Policy 6B - Guidelines for rock quarries for the re-establishment of native flora and fauna – Not applicable.

Objective 6/Policy 6D - Suitable fill material for the support of development – The proposed project will not cause premature urban encroachment. The proposed project must use suitable fill material in order to meet the requirements of Chapter 24 of the Code of Miami-Dade County.

Objective 7/Policy 7A - No net loss of high quality, relatively unstressed wetlands – The wetlands impacted by this project are considered high quality. The loss of wetland values associated with the proposed project will be mitigated as set forth in Number 14 above.

Objective 9/Policies 9A, 9B, 9C - Protection of habitat critical to Federal or State-designated threatened or endangered species – The U.S. Fish and Wildlife Service (FWS) indicated that for the American alligator (*Alligator mississipiensis),* American crocodile (*Crocodylus acutus),* and West Indian manatee *(Trichechus manatus)* there will be no negative effect. In adherence with the Endangered Species Act (ESA), the agency's determination is that impacts to habitat suitable for federally listed wood stork (*Mycteria Americana)*, the east indigo snake (*Drymarchon corais couperi*) and the Florida panther (*Puma concolor coryi)* will occur as a result of the proposed improvements. To minimize adverse effects to these species, NPS has agreed to follow the FWS's *Standard Protection Measure for the East Indigo Snake* (FWS 2004) during construction and to purchase off-site mitigation credits to compensate for impacts to wood stork and Florida panther habitat.

28. Conformance with Chapter 33B, Code of Miami-Dade County (East Everglades Zoning Overlay Ordinance) – The proposed project is not within the East Everglades Zoning overlay area.

29. Conformance with Miami-Dade County Ordinance 81-19 (Biscayne Bay Management Plan) – The proposed project is not within the area of the Biscayne Bay Management Plan.

30. Conformance with Manatee Protection Plan – Not applicable.

31. Consistency with Miami-Dade County Criteria for Lake Excavation – Not applicable.

32. Municipality Recommendation – Not Applicable.

33. Coastal Resources Management Line – Not Applicable.

34. Maximum Protection of a Wetland's Hydrological and Biological Functions Through Adherence to the Following Fill Limitations: -
    i) Placement of the minimum fill necessary to provide for the land usage alternative which results in the least adverse environmental impact and the least cumulative adverse environmental impact – The proposed project uses the minimum amount of fill necessary to provide for the proposed land usage alternative.
    ii) Placement of temporary fill pads and fill roads for the purpose of conducting rock mining - Not applicable.

The proposed project was also evaluated for compliance with the minimum required standards contained in Section 24-48.3 (2), (3), and (4) of the Code of Miami-Dade County. The following is a summary of the proposed project's compliance with said standards:

24-48.3 (2) Dredging and/or Filling for Class I Permit – Not applicable.

24-48.3 (3) Docks and Piers for Mooring Purposes - Not applicable.

24-48.3 (4) Clean Fill in Wetlands - The proposed project involves the placement of clean fill material only as defined in Section 24-5 of the Code of Miami-Dade County.

24-48.3 (6) Basin Fill Criteria – Not applicable.

SUMMARY

BASED ON THE FOREGOING, IT IS RECOMMENDED THAT A CLASS IV PERMIT BE APPROVED.

Lisa Spadafina, Wetland Resources Section Manager
Natural Resources Regulation and Restoration Division

Johanna Velasquez, Biologist II
Natural Resources Regulation and Restoration Division