OFFICIAL FILE COPY
CLERK OF THE BOARD
OF COUNTY COMMISSIONERS
MIAMI-DADE COUNTY, FLORIDA

Memorandum

MIAMI-DADE COUNTY

Date: October 1, 2013

To: Honorable Chairwoman Rebeca Sosa
and Members, Board of County Commissioners

Agenda Item No. 17(A)(1)

From: Carlos A. Gimenez
Mayor

Subject: Resolution Authorizing the Execution of a License Agreement between Miami-Dade County and Florida Power and Light Company

Resolution No. R-823-13

Recommendation

It is recommended that the Board approve the accompanying resolution authorizing the Mayor or Designee to execute a License Agreement ("Agreement") between Miami-Dade County ("County") and Florida Power and Light Company ("FPL"), for the purpose of housing Homeland Security Equipment as part of PortMiami's ("Port") Waterside Surveillance System.

This item is being submitted for approval and ratification by the Board pursuant to Section 2 -1 of the Code of Miami-Dade County authorizing the County Mayor or County Mayor's designee to administer County business during the Board's summer recess period. As the current License Agreement with FPL expires on August 30, 2013, a new Agreement with FPL is essential for uninterrupted security surveillance of PortMiami's waterside.

Scope

Port Miami is located within District 5 – Commissioner Bruno A. Barreiro. The overall impact of this agenda item is countywide as the proposed system provides critical security assurance to PortMiami which is a regional asset and generates employment for residents throughout Miami-Dade County.

Fiscal Impact/Funding Source

This Agreement will have a minimal financial impact on the Port while providing necessary functions needed in safety and security. The Port shall pay FPL $1,900.00 in rental costs per month and will be paid through the Port's revenue fund.

Track Record/Monitor

The Port staff members responsible for monitoring the waterside surveillance program are Major Alfredo Ferrer, Seaport Operations Bureau and Hugo Hernandez, Chief of Information Systems.

Background

On September 16, 2008, the Board approved Resolution No. R-982-08, authorizing a lease agreement between the County and FPL, providing for the Port to install Homeland Security equipment at FPL's MacArthur Causeway facility. In November of 2008, the Port installed and implemented the Waterside Surveillance System obtained via a grant awarded to the Port

by the Department of Homeland Security. This Agreement is set to expire on August 30, 2013. Toward this event, the Port is requesting the Board's approval of a new License Agreement between the County and FPL for a sixty-one (61) month term (September 1, 2013 - September 30, 2018). As stated in the fiscal impact section above, the County shall pay FPL $1,900.00 per month for the use of their facility.

The Waterside Surveillance System provides real-time situational awareness of the waters surrounding the Port. This system is used to detect the presence of unauthorized watercrafts and/or intruders approaching restricted areas within the Port's perimeter. The system has also been integrated into the Port's Berthing System to announce arrivals and departures, as well as to its Physical Security Management System to announce the arrival of vessels carrying hazardous materials.

DELEGATED AUTHORITY

In accordance with Section 2-8.3 of the Miami-Dade County Code related to identifying delegation of Board authority, there are no authorities beyond those specific in the resolution which include the authority for the Mayor or designee to execute the Agreement and to exercise any cancellation and renewal provisions.

Jack Osterholt, Deputy Mayor

MEMORANDUM
(Revised)

TO: Honorable Chairwoman Rebeca Sosa
and Members, Board of County Commissioners

DATE: October 1, 2013

FROM: R. A. Cuevas, Jr.
County Attorney

SUBJECT: Agenda Item No. 17(A)(1)

Please note any items checked.

_____ **"3-Day Rule" for committees applicable if raised**

_____ **6 weeks required between first reading and public hearing**

_____ **4 weeks notification to municipal officials required prior to public hearing**

_____ **Decreases revenues or increases expenditures without balancing budget**

_____ **Budget required**

_____ **Statement of fiscal impact required**

_____ **Ordinance creating a new board requires detailed County Mayor's report for public hearing**

✓ **No committee review**

_____ **Applicable legislation requires more than a majority vote (i.e., 2/3's ____, 3/5's ____, unanimous _____) to approve**

_____ **Current information regarding funding source, index code and available balance, and available capacity (if debt is contemplated) required**

Approved _____ Mayor
Veto _____
Override _____

Agenda Item No. 17(A)(1)
10-1-13

RESOLUTION NO. R-823-13

RESOLUTION RATIFYING THE COUNTY MAYOR'S OR COUNTY MAYOR'S DESIGNEE'S ACTIONS AUTHORIZING EXECUTION OF A LICENSE AGREEMENT BETWEEN MIAMI-DADE COUNTY AND FLORIDA POWER & LIGHT COMPANY FOR THE PURPOSE OF HOUSING HOMELAND SECURITY SURVEILLANCE EQUIPMENT; AND AUTHORIZING THE MAYOR OR DESIGNEE TO EXECUTE THE AGREEMENT FOR AND ON BEHALF OF MIAMI-DADE COUNTY, AND TO EXERCISE TERMINATION RIGHTS CONFERRED THEREIN

WHEREAS, this Board desires to accomplish the purposes outlined in the accompanying memorandum, a copy of which is incorporated herein by reference; and

WHEREAS, this Board adopted Ordinance No. 12-92, authorizing the County Mayor or County Mayor's designee to administer County business during the Board of County Commissioners' annual summer recess as provided therein, and has directed that all actions taken pursuant to such authority be submitted to this Board for ratification at its first regular meeting in October,

NOW, THEREFORE, BE IT RESOLVED BY THE BOARD OF COUNTY COMMISSIONERS OF MIAMI-DADE COUNTY, FLORIDA, that this Board ratifies the County Mayor's or County Mayor's designee's actions of:

Section 1. Approves the execution of a License Agreement between Miami-Dade County and Florida Power & Light Company, in substantially the form attached hereto and made a part hereof.

Section 2. Authorizes the Mayor or designee to execute the License Agreement after review and approval by the County Attorney's office; and to exercise termination rights conferred therein.

The foregoing resolution was offered by Commissioner **Esteban L. Bovo, Jr.**, who moved its adoption. The motion was seconded by Commissioner **Rebeca Sosa** and upon being put to a vote, the vote was as follows:

Rebeca Sosa, Chairwoman	**aye**		
Lynda Bell, Vice Chair	**absent**		
Bruno A. Barreiro	**absent**	Esteban L. Bovo, Jr.	**aye**
Jose "Pepe" Diaz	**aye**	Audrey M. Edmonson	**aye**
Sally A. Heyman	**absent**	Barbara J. Jordan	**aye**
Jean Monestime	**aye**	Dennis C. Moss	**absent**
Sen. Javier D. Souto	**aye**	Xavier L. Suarez	**aye**
Juan C. Zapata	**absent**		

The Chairperson thereupon declared the resolution duly passed and adopted this 1st day of October, 2013. This resolution shall become effective ten (10) days after the date of its adoption unless vetoed by the Mayor, and if vetoed, shall become effective only upon an override by this Board.

MIAMI-DADE COUNTY, FLORIDA
BY ITS BOARD OF
COUNTY COMMISSIONERS

HARVEY RUVIN, CLERK

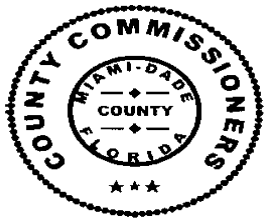

By: ***Christopher Agrippa***
Deputy Clerk

Approved by County Attorney as
to form and legal sufficiency.

Richard Seavey

LICENSE AGREEMENT

(FPL License # 0324-SD-2009)

THIS LICENSE AGREEMENT ("**License**"), is made this 18th day of Sept., 2013 ("**Effective Date**") by and between Florida Power & Light Company, a Florida corporation, whose mailing address is 700 Universe Blvd., CRE/JB, Juno Beach, Florida 33408-0420 ("**Licensor**"), and Miami-Dade County, a political subdivision of the State of Florida,, whose mailing address is Seaport Department, 1015 N. America Way, Office of Information Systems, 2nd Floor, Miami, Florida 33132, ("**Licensee**").

WITNESSETH

WHEREAS, Licensor is the owner of title in fee simple to real property located in Miami-Dadee County, Florida; and more particularly shown and described upon **Exhibit A**, attached hereto and incorporated herein by this reference ("**Licensed Premises**"); and

WHEREAS, Licensee desires to occupy and use the Licensed Premises as stated herein; and

NOW, THEREFORE, in consideration of the mutual benefits, covenants, agreements and promises contained in this License, Licensor hereby grants to Licensee and Licensee hereby accepts from Licensor, this non-exclusive License to occupy and use the Licensed Premises upon the following terms, conditions and provisions:

TERMS, CONDITIONS, AND PROVISIONS

1. **Use**. Licensee may use the Licensed Premises solely for the sole purpose of installing, maintaining and operating a security camera and radar system as described and shown upon **"Exhibit B"**, attached hereto and incorporated herein by this reference, but not for any other purpose. Licensee shall obtain all applicable federal, state, and local permits required in connection with Licensee's allowed use of the Licensed Premises and provide to Licensor, copies of each such permit.

2. **Term**. This License is for a term of sixty-one (61) months beginning upon the 1st day of September, 2013 and ending upon the 30th day of September, 2018 ("**Term**") unless earlier terminated or revoked as provided by this License, or extended by mutual agreement of Licensor and Licensee.

3. **Rent**. During the Term, Licensee shall pay rent to Licensor in the amount of nineteen hundred dollars and zero cents ($1,900.00) each month, payable in advance commencing upon the first day of the Term of this License and then upon the first day of each month thereafter, plus sales tax if applicable.

4. **Licensor's Rights**. Licensor is the owner of fee simple title to the Licensed Premises and Licensee agrees to never claim any interest or estate of any kind or extent whatsoever to or in the Licensed Premises by virtue of this License or the occupancy or use hereunder. Licensee's use of the Licensed Premises shall always be subordinate to Licensor's rights to and in the Licensed Premises. Licensor reserves the right to enter upon the Licensed Premises at any time and Licensee shall notify its employees, agents, contractors, subcontractors, licensees, and invitees accordingly. Licensor, its employees and contractors are not and shall not be responsible or liable for any injury, damage or loss to Licensee resulting from Licensor's use and/or Licensee's use of the Licensed Premises. Licensor may at its sole discretion, install and/or permit others to install facilities upon, over and/or under the surface of the Licensed Premises.

5. <u>Conditions and Restrictions On Use</u>.

(a) Licensee shall at its sole cost and expense, comply with all laws, rules, and regulations of all governmental authorities having jurisdiction over the Licensed Premises or use of the Licensed Premises. Licensee shall employ agricultural and other land management practices standard in the county and/or counties in which the Licensed Premises is located according to the purpose for which this License is granted and for the protection of the Licensed Premises. Licensee shall not within the Licensed Premises, construct or erect any permanent or temporary building, structure, fixture, fence, shelter, attachment or improvement without prior written permission from Licensor. All work to be performed by Licensee upon the Licensed Premises shall be in accordance with detailed plans and specifications to be prepared by Licensee and submitted to Licensor for written approval thereof. Licensee shall not commence any such work until plans and specifications have been approved by Licensor. Licensee shall pay directly on its own behalf for all costs associated with construction and maintenance of all improvements and facilities that it constructs, operates and maintains upon the Licensed Premises. All fences, gates, lighting systems and irrigation systems installed by Licensee shall be electrically grounded according to Licensor's specifications. Licensee shall not cause or allow any waste of the Licensed Premises and shall not remove soil, import soil or alter the existing surface elevation of the Licensed Premises without first obtaining written permission of Licensor. Licensee shall pay for all utility and other services furnished to or for Licensee upon the Licensed Premises. Licensee shall remove trash, rodents, insects and vermin from the Licensed Premises as necessary.

(b) Licensee shall not use the Licensed Premises in any manner which, in the sole opinion of Licensor, might interfere with Licensor's use of the Licensed Premises or might cause a hazardous condition to exist. Licensee acknowledges that electrical equipment and appurtenances including, but not limited to utility poles, overhead and underground wires, cables, circuits, insulators, transformers, guy wires, and guy wire anchors (collectively "**Licensor Facilities**"), are installed or may be installed over, upon and under the surface of the Licensed Premises by Licensor and by others and are conductors of high-voltage electricity. Licensee understands that contact with or disturbance of any of these Licensor Facilities may cause a condition hazardous to persons and/or property. Licensee shall exercise extraordinary precautions to prevent injury or damage to persons and/or property that could result from contact with or disturbance of Licensor Facilities. Licensee shall notify its employees, agents, contractors, subcontractors, licensees and invitees of the existence of Licensor Facilities when working in the vicinity of the Licensed Facilities.

(c) Licensee shall not install any improvements within twenty-five (25) feet of Licensor Facilities, unless Licensee first obtains prior written approval from Licensor. Licensee shall not cause or allow anything to exceed fourteen (14) feet in height above the surface of the Licensed Premises, nor allow any equipment capable of extending greater than fourteen (14) feet above the surface of the Licensed Premises to be brought upon the Licensed Premises, except that this provision shall not apply to equipment and items brought onto the Licensed Premises by Licensor or Licensor's employees, agents, and contractors. Licensee shall utilize effective dust control measures to prevent contamination of high-voltage circuit insulators. In each and every location where an electrical circuit exists above the ground surface of the Licensed Premises, Licensee shall not allow to be planted or rooted in the ground within less than fifty (50) lateral feet of such circuit, any type of vegetation that is capable of growing to a height of fourteen (14) feet or more above the ground surface. Licensee may, anywhere upon the Licensed Premises, grow any type of vegetation that is planted and rooted in a pot or container where the volume capacity of the pot or container does not exceed twenty-five (25) gallons and where no part of the pot or container exists below the surface of the ground that touches the pot or container. Vegetation planted and rooted in a pot or container shall not be allowed at any time to exceed a height of fourteen (14) feet above the ground surface of the Licensed Premises. Licensor shall have the right, but no form of obligation, to inspect the Licensed Premises to determine if Licensee is in compliance with all terms, conditions and provisions of this License.

6. **Environmental**.

(a) Licensee agrees that no hazardous substance, as the term is defined in Section 101 (14) of the Comprehensive Environmental Response Compensation and Liability Act ("**CERCLA**") (42 USC Section 9601 [14]), petroleum products, liquids or flammables shall be placed upon, under, transported across, or stored upon the Licensed Premises, which restricts, impairs, interferes with, or hinders the use of the Licensed Premises by Licensor or the exercise by Licensor of any of its rights thereto.

(b) Environmental Contamination is defined as any spilling or discharge of any chemical constituent by the Licensee to the environment that results in any pollution, sheen or contamination of the groundwater, surface water, soil, or any other environmental media, on or from the Licensed Premises, above the federal, state or local regulatory levels; including, (a) for groundwater: Chapters 62-777, Table I, 62-520, or 62-550 of the Florida Administrative Code ("**FAC**"); (b) for surface waters: Chapters 62-777, Table I, or 62-302 of the FAC; and (c) for soils: Chapters 62-777, FAC, Table II; or above natural background levels.

(c) If the Licensee causes any Environmental Conditions to occur because of the performance of activities contemplated by this License, Licensee shall notify Licensor immediately upon discovery. Licensee acknowledges that the failure to deliver such notification may cause Licensor to file a damage claim against Licensee and confers to Licensor the right to terminate this License as set forth in Section 8. Within seventy-two (72) hours of discovering such Environmental Conditions, Licensee shall, at its sole cost and expense, correct such condition or situation; provided that the Licensor retains the right to enter upon the Licensed Premises and correct any such condition or situation at any time. Any release notifications required to be submitted to federal, state or local regulatory agencies, because of the actions of Licensee pursuant to this License or any other notifications based on Environmental Conditions, shall be coordinated with Licensor.

7. **Right to Cure**. Licensor, at its sole discretion, may remove or cause to be removed by it or by its employees, agents, contractors, subcontractors, licensees, and invitees, all objects, materials, debris, or structures that could create a condition hazardous to persons or property or interfere with Licensor's use of its Licensed Premises or with Licensor Facilities. All costs expended by Licensor pursuant to this section which are caused by Licensee, its employees, agents, contractors, subcontractors, licensees, and invitees, are and shall be the sole obligation of Licensee, who shall reimburse Licensor upon demand. If any of Licensee's activities or Licensee's use of the Licensed Premises results in an interruption of electric utility service, then Licensee shall reimburse Licensor for all costs related to each such interruption, including, but not limited to Licensor's lost revenue and costs to restore electric utility service.

8. **Termination**. Licensor may terminate this License at any time and for any reason by giving Licensee at least ninety (90) days written notice of such termination and in such case, Licensor shall refund to Licensee, advance rent paid by Licensee to Licensor for the period of time, if any, that Licensee is unable to use the Land due to Licensor's early termination. Licensee may terminate this License at any time and for any reason by giving Licensor at least ninety (90) days written notice of such termination; however in such case, Licensee shall not be entitled to a refund of advance rent paid for any period of time that Licensee does not actually use the Land as a result of Licensee's early termination of this License. Licensor may immediately terminate this License at any time if Licensor, in its sole discretion, determines that Licensee and/or its employees, agents, contractors, subcontractors, licensees, or invitees have violated and/or failed to comply with any term, condition or provision of this License, and in such event, all advance rent and/or other payments paid by Licensee to Licensor hereunder shall be retained by Licensor as liquidated damages, it being understood and agreed that the damages incurred by Licensor if Licensee fails to perform hereunder may not be ascertained with mathematical precision as of the Effective Date. This License shall become terminated automatically upon the death or dissolution of the Licensee or if Licensee shall become insolvent or bankrupt.

9. **Surrender**. Upon termination or expiration of this License, Licensee shall vacate and leave the Licensed Premises in as good a condition as existed prior to the Effective Date. No later than five (5) calendar days following the date upon which this License becomes expired, terminated or revoked, Licensee shall remove all personal property and improvements placed upon the Licensed Premises by Licensee and shall repair and restore and save Licensor harmless from all damage caused by such removal. If all such personal property and improvements placed upon the Licensed Premises by Licensee are not so removed by Licensee within the above prescribed five (5) day period, then Licensor shall have the right to take possession of and appropriate unto itself, without any payment or offset thereof, any personal property and improvements placed upon the Licensed Premises by Licensee or any other entity acting on behalf, and/or Licensor shall have the right to effect removal of such personal property and improvements at Licensee's sole cost and expense, the amount of which Licensee agrees to reimburse to Licensor immediately upon Licensor's demand.

10. **No Encumbrances**. Licensee expressly covenants and agrees that the Licensed Premises shall not be subject to any encumbrance by any mortgage, lien, financial instrument or other agreement outside of or in addition to this License, nor shall the Licensed Premises be liable to satisfy any indebtedness that may result from Licensee's operation or activity.

11. **Indemnity**. Subject to Section 768.28, Florida Statutes, Licensee shall exercise its privileges herein at its sole risk and agrees to indemnify and save harmless Licensor and Licensor Entities, from all liability, loss, cost, and expense, including attorneys' fees, which may be sustained by Licensor Entities, to any person, natural or artificial, by reason of the death of or injury to any person or damage to any property, whether or not due to or caused by the negligence of Licensor Entities, arising from or in connection with the use of the Licensed Premises by Licensee, and its employees, agents, contractors, subcontractors, licensees, and invitees. Licensee agrees to defend, at its sole cost and expense, but at no cost and expense to Licensor Entities, any and all suits or actions instituted against Licensor Entities for the imposition of such liability, loss, cost, and expense arising from the use of the Licensed Premises by Licensee and its employees, agents, contractors, subcontractors, licensees, and invitees. This paragraph shall survive the expiration or early termination of this License or any renewal term thereof.

12. **Insurance**. Licensee shall at all times during the entire term of this License, maintain a self-insurance program in compliance with all applicable laws, including, but not limited to Section 768.28 Florida Statutes and such coverage shall extend to and provide protection for any and all claims arising out of or in connection with Licensee's occupancy and use of Company's Land. In addition to the aforementioned coverage, Company also maintains at its own expense, general liability insurance coverage for personal injury and property damage arising out of or in connection with Licensee's occupancy and use of Company's Land; however, such additional coverage shall not be deemed to relinquish Licensee from its duty and obligation to comply with any and all terms, conditions or provisions as set forth in Section 16, and all other parts of this License.

13. **No Transfer**. Licensee shall not, without the prior written consent of Licensor, allow any other entity or party to occupy or use the Licensed Premises or in any way transfer, assign, lease, sublease, license, sublicense or in any other manner, convey this License to any entity or party not specifically named herein by Licensor as a party to this License. Licensee shall not hypothecate this License, nor enter into any license, concession agreement, mortgage, contract or other agreement which conflicts with or is contradictory to the terms and provisions of this License.

14. **Holding Over**. If Licensee continues to occupy and/or use the Licensed Premises, or any part thereof, after expiration, termination or revocation of this License, then no tenancy, ownership or other legal interest in the Licensed Premises to the benefit of Licensee shall result therefrom, but such holding over shall be an unlawful detainer and all parties occupying and/or using the Licensed Premises shall be subject to immediate eviction and removal, and Licensee shall upon demand pay to Licensor, as liquidated damages, a sum equal to double the rate of rent as set forth in Section 3 for and during any and all period(s) which Licensee and/or its employees, agents, contractors, subcontractors, licensees, and invitees fail to vacate the Licensed Premises after the date upon which this License becomes expired, terminated, or revoked.

15. Waiver of Jury Trial. **Licensee knowingly, voluntarily and intentionally waives any and all right(s) it may have to a trial by jury with respect to any litigation based upon, or arising from, under, or in connection with this License, or any document contemplated to be executed in conjunction herewith, or any course of conduct, course of dealing, statement (whether oral or written) or action of Licensee.** In any and all litigation arising out of or in connection with enforcement of the terms, conditions or provisions of this License, the prevailing party in such litigation shall be entitled to recovery of each and all of its costs, including reasonable attorneys' fees.

16. Applicable Law and Venue. This License, including each and all of its terms, conditions and provisions, is governed by and interpreted according to the laws of the State of Florida. All legal matters arising out of, or in connection with this License are and shall be subject to a court of competent jurisdiction within the State of Florida. If any term, condition or provision, or any part thereof, is found by a Florida court to be unlawful, void or unenforceable, then that term, condition, provision or part thereof shall be deemed severable and will not affect the validity and enforceability of any of the remaining terms, conditions and provisions of this License.

17. Time and Entire Agreement: Time is of the essence, and no extension of time shall be deemed granted unless made in writing and executed by both Licensor and Licensee. This instrument constitutes the entire agreement between the parties hereto and relative to the License, and any agreement or representation which is not expressly set forth herein and covered hereby is null and void. All amendments, modifications, changes, alterations and supplements to this License must be in writing and executed by both Licensor and Licensee in order to be deemed valid and enforceable. If Licensor fails or elects to not enforce Licensee's breach of any term, condition or provision of this License, then Licensor's failure or election to not enforce Licensee's breach shall not be deemed a waiver of Licensor's right to enforce one or more subsequent breaches of the same or any other term, condition or provision of this License.

18. Notices. All notices associated with and related to this License shall be deemed to have been served upon the date and time received by Licensor or Licensee at the addresses set forth in the Preamble by: government postal service, private delivery service or by electronic email. Either party may, at any time, designate in writing a substitute address for the address first written above, and thereafter notices shall be directed to such substituted address.

19. Counterparts. This Agreement may be executed in multiple counterparts, each of which shall be deemed an original, and all of which together shall constitute a single instrument.

IN WITNESS WHEREOF, Licensor and Licensee have caused this License to be signed and executed effective as of the Effective Date.

Witness for Licensor:

Signature: _____
Print Name: Jeff Long

Licensor:
Florida Power & Light Company,
a Florida corporation

By: _____
Name: Dean J. Girard
Its: Director, Corporate Real Estate

STATE OF FLORIDA)
) ss.
COUNTY OF PALM BEACH)

The foregoing instrument was acknowledged before me this 27th day of Aug., 2013, by Dean J. Girard, Vice President of Corporate Real Estate for Florida Power & Light Company and who is personally known to me.

Michelle M. Kahmann
Notary Public

Notary Public State of Florida
Michelle M Kahmann
My Commission EE105168
Expires 09/18/2016

Notary Stamp or Seal

Form 3737 Rev. 8/22/2012

Licensee:
Miami-Dade County,
a political subdivision of the State of Florida,
by resolution of its Board of County Commissioners

By: _____
Name: _____
Its: _____

Attest:

By: _____
Name: Gene Sanchez
Its: Deputy Clerk

Approved by County Attorney as to form and legal sufficiency:

By: _____
Name: Richard Sealey
Its: County Attorney

Exhibit A to that certain License Agreement with Effective Date of the 1st day of September, 2013 by and between Florida Power & Light Company and Miami-Dade County.

Description of Licensed Premises located at 150 MacArthur Causeway, Miami Beach, Florida 33139

Property Information

Search By:

Select Item

Text only

Property Appraiser Tax Estimator

Summary Details:

Folio No.:	02-4204-000-0070
Property:	150 MACARTHUR CSWY
Mailing Address:	FLORIDA POWER & LIGHT CO ATTN PROPERTY TAX DEPT PO BOX 14000 JUNO BEACH FL 33408-

Property Information:

Primary Zone:	7000 INDUSTRIAL
CLUC:	0063 UTILITY
Beds/Baths:	0/0
Floors:	1
Living Units:	0
Adj Sq Footage:	11,063
Lot Size:	136,402 SQ FT
Year Built:	1999
Legal Description:	4 54 42 3.13 AC BEG AT PT 1680FTN & 2015FTW OF SE COR SEC BEING X OF C/L RDWAY OF ORIGINAL CO CSWY VIA & FACE OR W BRIDGE ABUTHT S 67 DEG W58.7FT S 31DEG E64.76FT TH SWLY

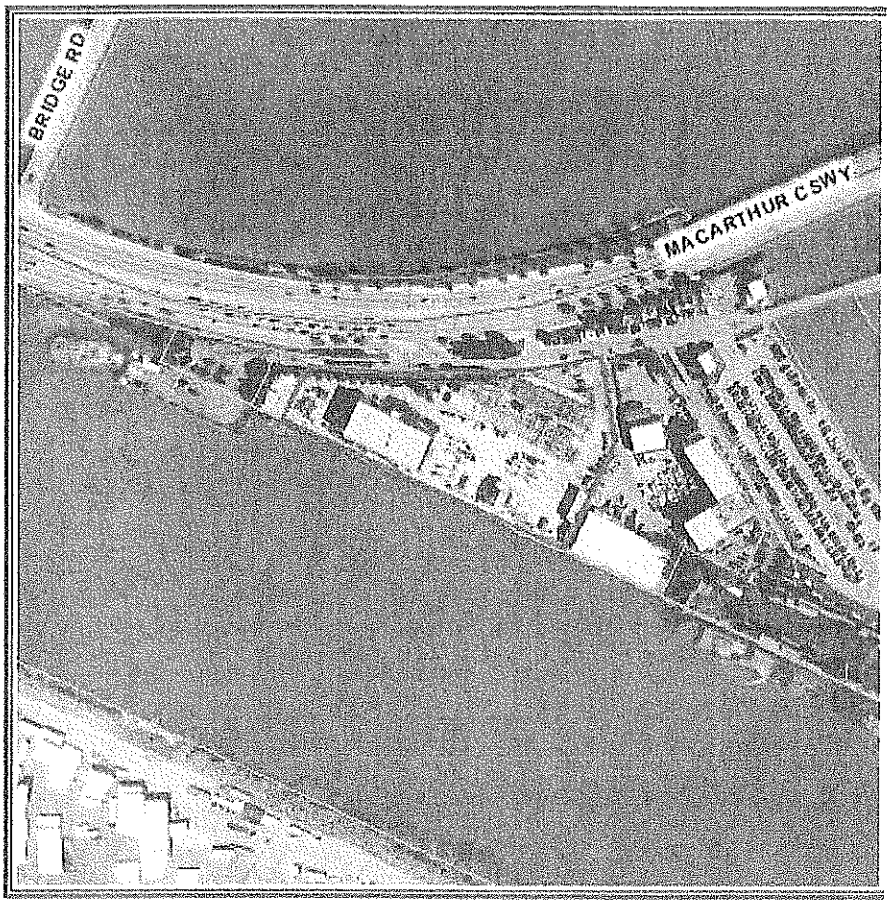

Digital Orthophotography - 2007

0 ——— 163 f

My Home | Property Information | Property Taxes | My Neighborhood | Property Appraiser

Home | Using Our Site | About | Phone Directory | Privacy Disclaimer

Exhibit B (Part 1 of 5) to that certain License Agreement with Effective Date of the 1st day of September, 2013 by and between Florida Power & Light Company and Miami-Dade County.

FPL building facility located at 150 MacArthur Causeway, Miami Beach, Florida 33139

Property Information

Search By:

Select Item

Text only

Property Appraiser Tax Estimator

Summary Details:

Folio No.:	02-4204-000-0070
Property:	150 MACARTHUR CSWY
Mailing Address:	FLORIDA POWER & LIGHT CO ATTN PROPERTY TAX DEPT PO BOX 14000 JUNO BEACH FL 33408-

Property Information:

Primary Zone:	7000 INDUSTRIAL
CLUC:	0063 UTILITY
Beds/Baths:	0/0
Floors:	1
Living Units:	0
Adj Sq Footage:	11,063
Lot Size:	136,402 SQ FT
Year Built:	1999
Legal Description:	4 54 42 3.13 AC BEG AT PT 1580FTN & 2015FTW OF SE COR SEC BEING X OF C/L RDWAY OF ORIGINAL CO CSWY VIA & FACE OR W BRIDGE ABUTHT S 67 DEG W58.7FT S 31DEG E64.75FT TH SWLY

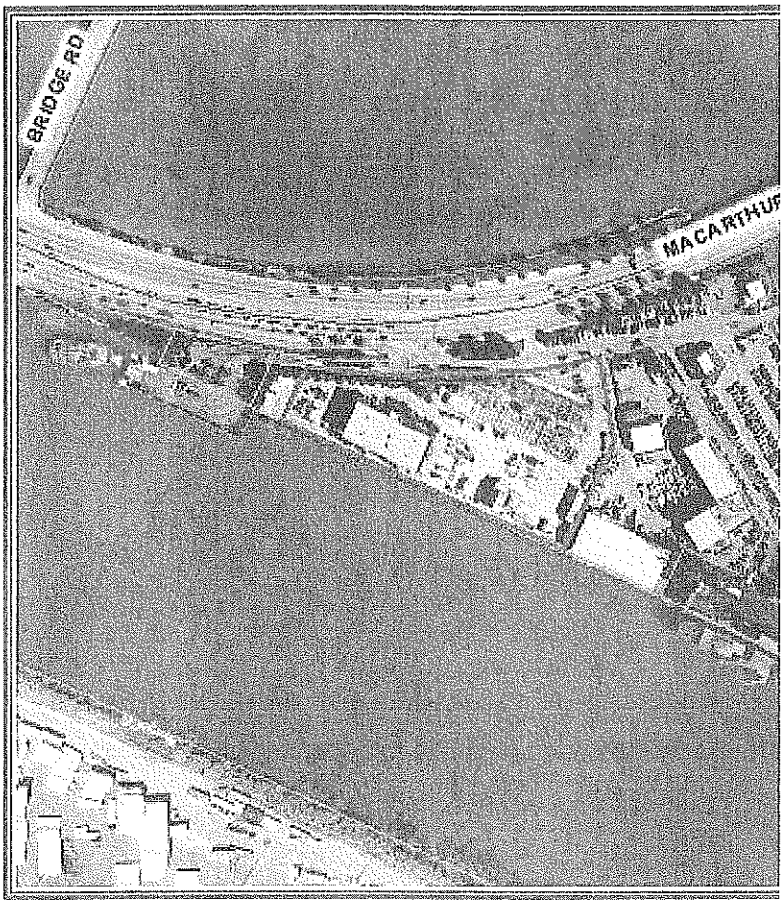

Digital Orthophotography - 2007

0

My Home | Property Information | Property Ta
| My Neighborhood | Property Appraiser

Home | Using Our Site | About | Phone Directory | F
Disclaimer

Exhibit B (Part 2 of 5)

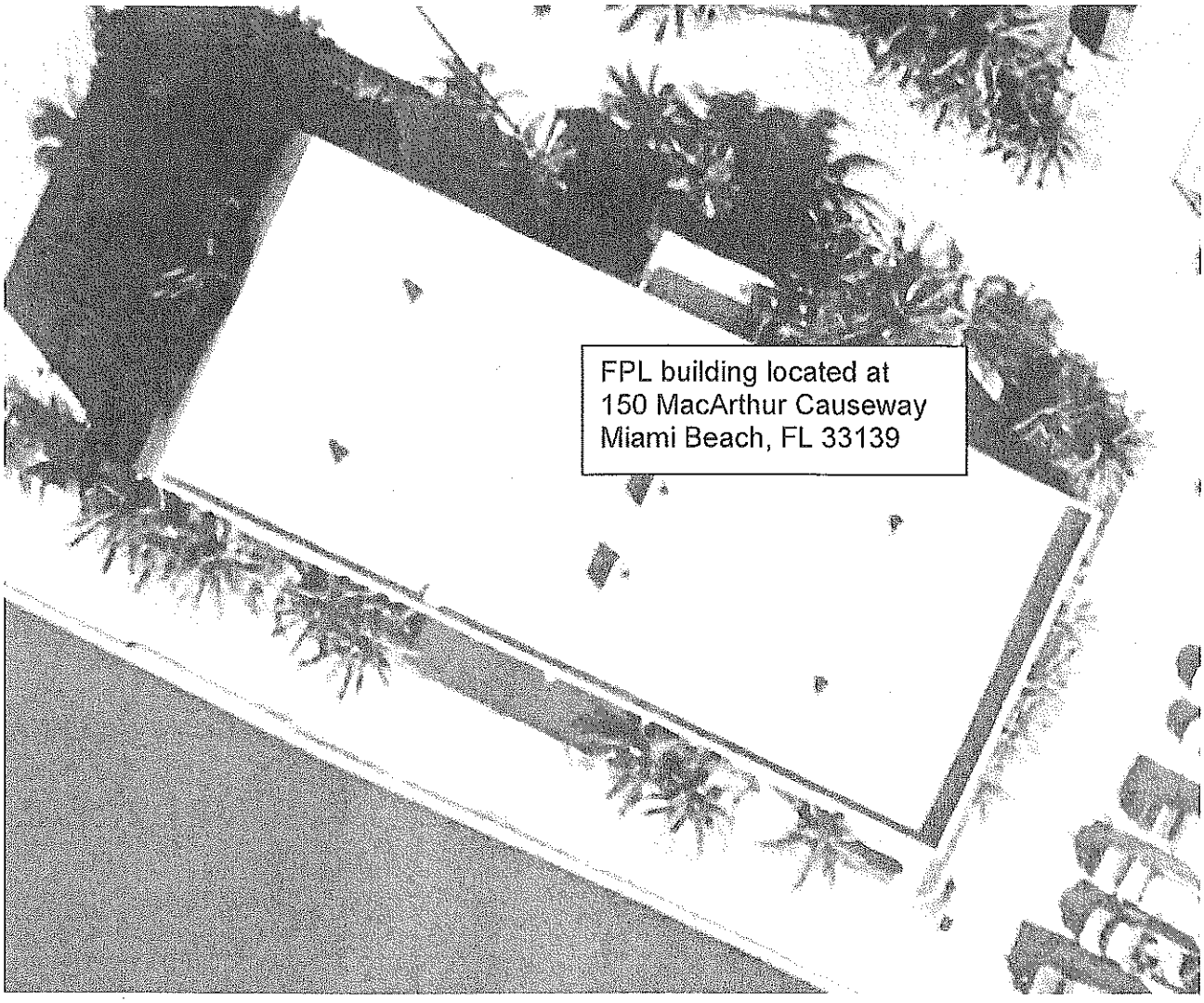

Exhibit B (Part 3 of 5)

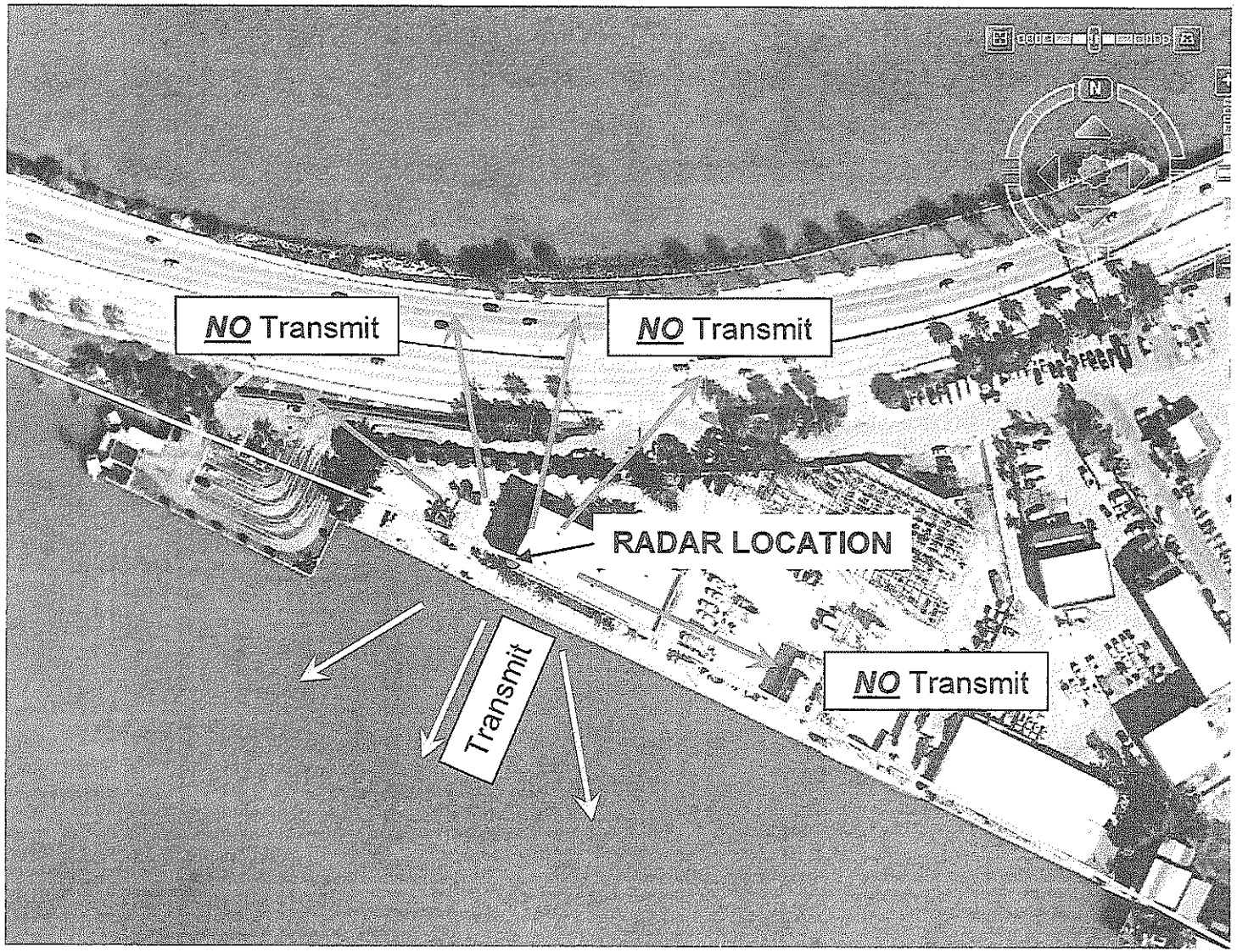

LIST OF EQUIPMENT				
MLOE. NO.	QTY.	DESCRIPTION	DESIGNATION	FURNISHED BY
#	#	ITEM DESCRIPTION HERE	i.e., PART #	GFE/CFE
#	#	ITEM DESCRIPTION HERE	i.e., PART #	GFE/CFE

LIST OF MATERIAL				
MLOM. NO.	QTY.	DESCRIPTION	DESIGNATION	FURNISHED BY
#	#	ITEM DESCRIPTION HERE	i.e., PART #	GFE/CFE
#	#	ITEM DESCRIPTION HERE	i.e., PART #	GFE/CFE
#	#	ITEM DESCRIPTION HERE	i.e., PART #	GFE/CFE
#	#	ITEM DESCRIPTION HERE	i.e., PART #	GFE/CFE

REVISIONS			
REV. NO.	DESCRIPTION	DATE	JUSTIFICATION
A			
B			

Port of Miami
Camera and radar systems

FLAG NOTES

1 ENTER NOTE

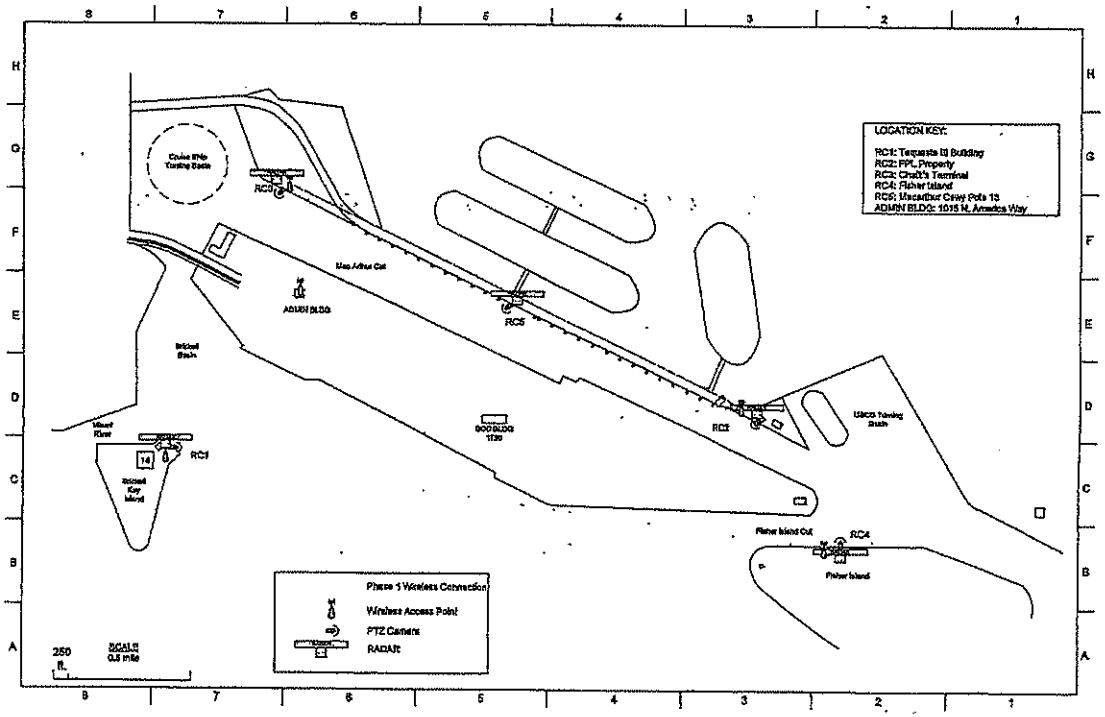

EXHIBIT "B"
(Part 4 of 5 pg 1)

A 01 SITE PLAN
SCALE: NONE

RADAR AND COMMUNICATIONS SYSTEMS
PORT OF MIAMI
SITE PLAN
MIAMI, FLORIDA

DWG. FILE NAME:	DWG. SIZE:	DWG. NUMBER	REV:	SHEET:
000EQL001	B	100000-8155-001	--	01

K:\Third Party\103397 - Port of Miami Surveillance Project\CADD\Installation\DWG-103397-8155-001\Site Plan.dwg

LIST OF EQUIPMENT

MODEL NO.	QTY.	DESCRIPTION	DESIGNATION	FURNISHED BY
#	#	ITEM DESCRIPTION HERE	i.e., PART #	GFE/CFE
#	#	ITEM DESCRIPTION HERE	i.e., PART #	GFE/CFE

LIST OF MATERIAL

MODEL NO.	QTY.	DESCRIPTION	DESIGNATION	FURNISHED BY
#	#	ITEM DESCRIPTION HERE	i.e., PART #	GFE/CFE
#	#	ITEM DESCRIPTION HERE	i.e., PART #	GFE/CFE
#	#	ITEM DESCRIPTION HERE	i.e., PART #	GFE/CFE
#	#	ITEM DESCRIPTION HERE	i.e., PART #	GFE/CFE

REVISIONS

REV. NO.	DESCRIPTION	DATE	JUSTIFICATION
A			
B			

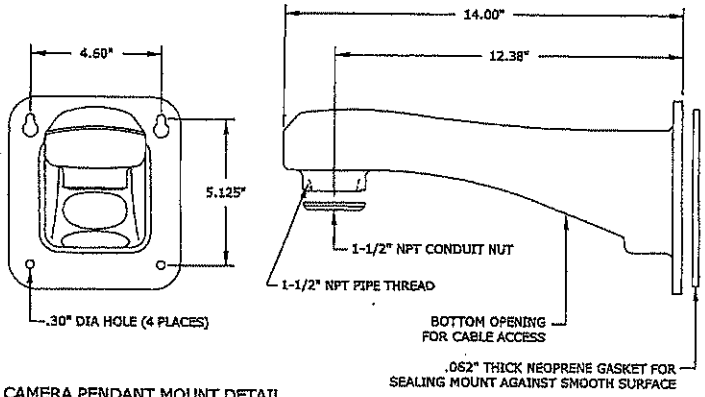

A/02 CAMERA PENDANT MOUNT DETAIL
SCALE: NONE

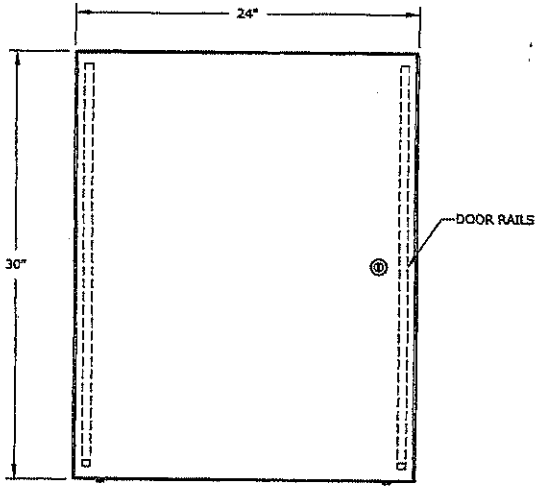

C/02 NEMA 4-4X 5412-ESS243008 ENCLOSURE DETAIL
SCALE: NONE

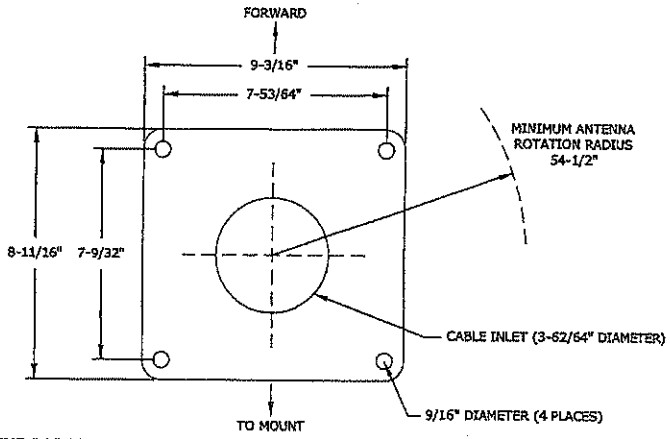

B/02 25 KW MARINE RADAR MOUNTING PLATE DETAIL
SCALE: NONE

EXHIBIT "B"
(Part 4.5 pg 2)

RADAR AND COMMUNICATIONS SYSTEMS
EQUIPMENT MOUNTING DETAILS
PORT OF MIAMI
MIAMI, FLORIDA

DWG. FILE NAME:	DWG. SIZE:	DWG. NUMBER:	REV:	SHEET:
000DTL001	B	103397-8155-001	--	01

K:\Third Party\103397 - Port of Miami Surveillance Project\CADD\Installation\DWG-103397-8155-001\DETAILS.dwg

LIST OF EQUIPMENT

MODEL NO.	QTY.	DESCRIPTION	DESIGNATION	FURNISHED BY
#	#	ITEM DESCRIPTION HERE	i.e., PART #	GFE/CFE
#	#	ITEM DESCRIPTION HERE	i.e., PART #	GFE/CFE

LIST OF MATERIAL

MODEL NO.	QTY.	DESCRIPTION	DESIGNATION	FURNISHED BY
#	#	ITEM DESCRIPTION HERE	i.e., PART #	GFE/CFE
#	#	ITEM DESCRIPTION HERE	i.e., PART #	GFE/CFE
#	#	ITEM DESCRIPTION HERE	i.e., PART #	GFE/CFE
#	#	ITEM DESCRIPTION HERE	i.e., PART #	GFE/CFE

REVISIONS

REV. NO.	DESCRIPTION	DATE	JUSTIFICATION
A			
B			

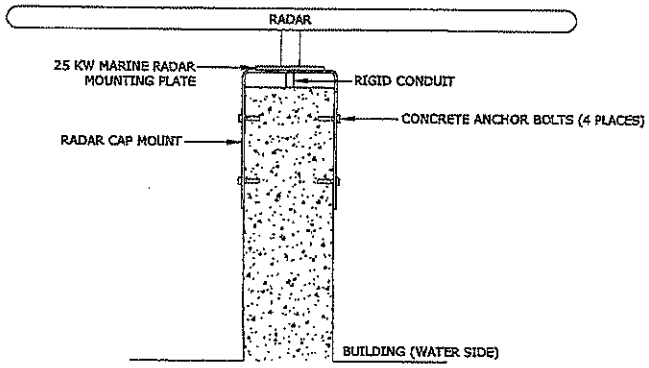

B/03 RADAR WALL MOUNTING CAP DETAIL - SIDE VIEW
SCALE: NONE

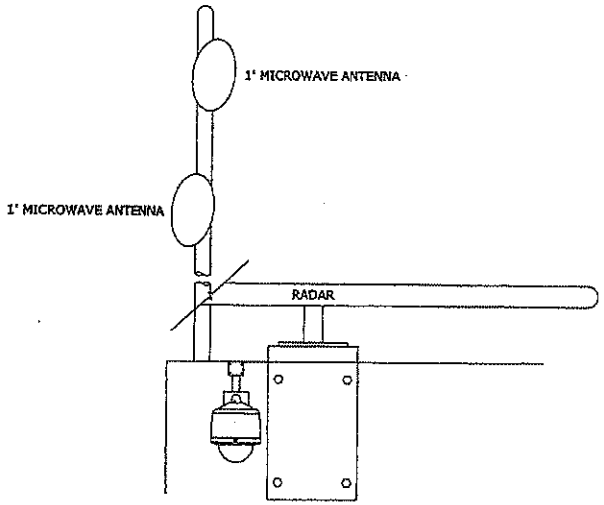

B/03 EQUIPMENT MOUNTING DETAIL - ELEVATION VIEW
SCALE: NONE

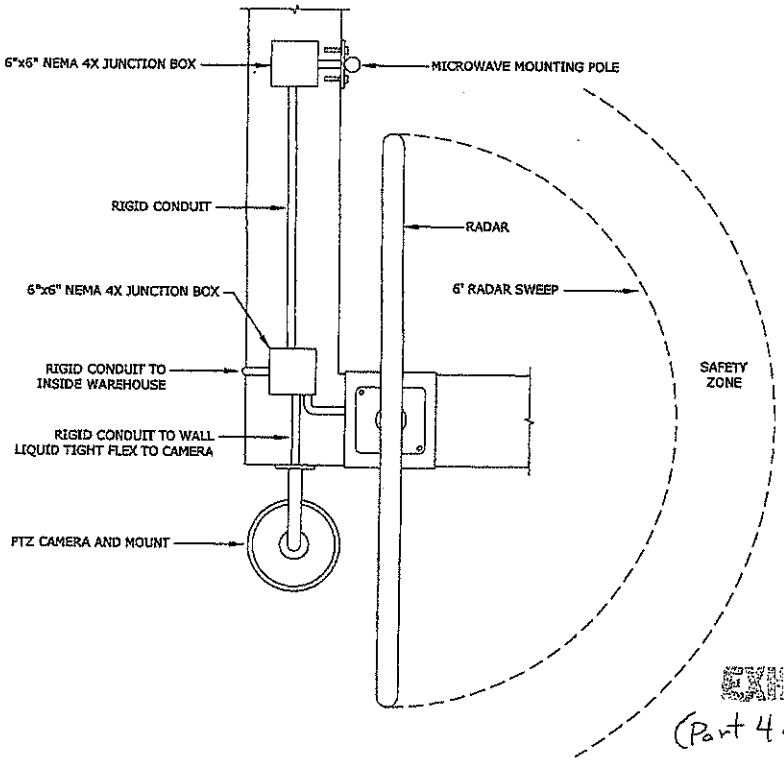

C/03 EQUIPMENT MOUNTING DETAIL SOUTHWEST CORNER - TOP VIEW
SCALE: NONE

EXHIBIT "B"
(Part 4 of 5 pg. 3)

RADAR AND COMMUNICATIONS SYSTEMS
EQUIPMENT MOUNTING DETAILS
PORT OF MIAMI
MIAMI, FLORIDA

DWG. FILE NAME:	DWG. SIZE:	DWG. NUMBER:	REV:	SHEET:
000DTL002	B	103397-8155-001	--	03

K:\Third Party\103397 - Port of Miami Surveillance Project\CADD\Installation\DWG-103397-8155-001\DETAILS.dwg

LIST OF EQUIPMENT

MODEL NO.	QTY.	DESCRIPTION	DESIGNATION	FURNISHED BY
#	#	ITEM DESCRIPTION HERE	i.e., PART #	GFE/CFE
#	#	ITEM DESCRIPTION HERE	i.e., PART #	GFE/CFE

LIST OF MATERIAL

MTRL NO.	QTY.	DESCRIPTION	DESIGNATION	FURNISHED BY
#	#	ITEM DESCRIPTION HERE	i.e., PART #	GFE/CFE
#	#	ITEM DESCRIPTION HERE	i.e., PART #	GFE/CFE
#	#	ITEM DESCRIPTION HERE	i.e., PART #	GFE/CFE
#	#	ITEM DESCRIPTION HERE	i.e., PART #	GFE/CFE

REVISIONS

REV. NO.	DESCRIPTION	DATE	JUSTIFICATION
A			
B			

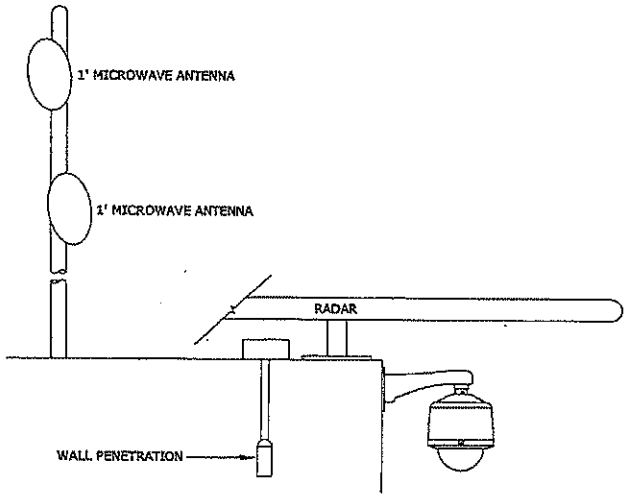

A/04 EQUIPMENT MOUNTING DETAIL SOUTHWEST CORNER- ELEVATION VIEW
SCALE: NONE

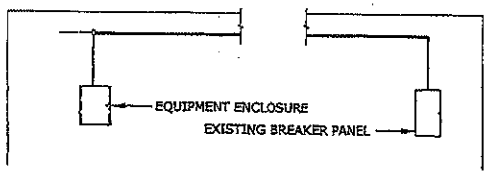

B/04 EQUIPMENT MOUNTING DETAIL - INTERIOR ELEVATION VIEW
SCALE: NONE

EXHIBIT "B"
(Part 4 of 5 pg. 4)

RADAR AND COMMUNICATIONS SYSTEMS
EQUIPMENT MOUNTING DETAILS
PORT OF MIAMI
MIAMI, FLORIDA

DWG. FILE NAME	DWG. SIZE	DWG. NUMBER	REV.	SHEET
000DTL002	B	103397-8000-001	--	04

K:\Third Party\103397 - Port of Miami Surveillance Project\CADD\Installation\DWG-103397-8155-001\DETAILS.dwg

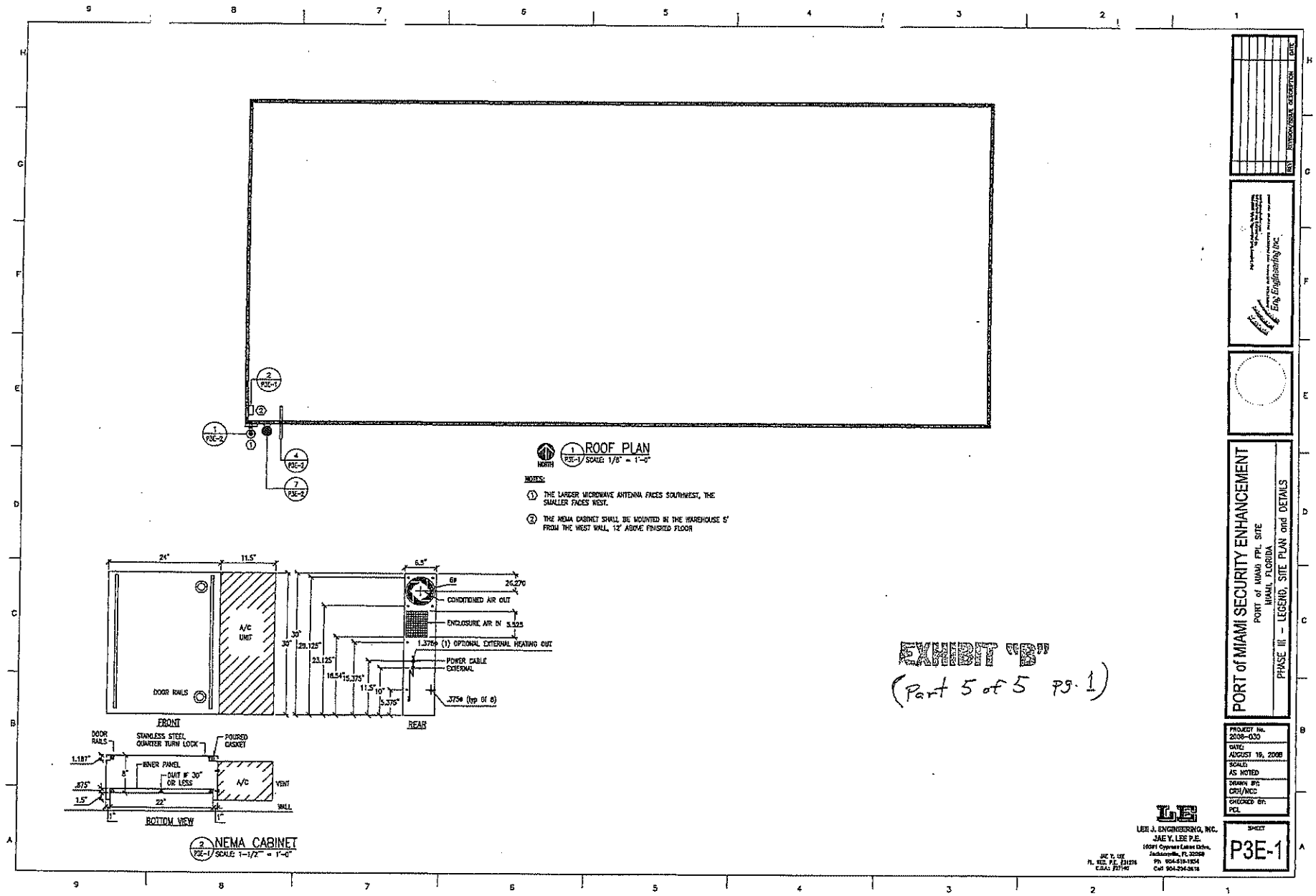

ROOF PLAN
SCALE: 1/8" = 1'-0"
NORTH
NOTES:
1. THE LARGER MICROWAVE ANTENNA FACES SOUTHWEST, THE SMALLER FACES WEST.
2. THE NEMA CABINET SHALL BE MOUNTED IN THE WAREHOUSE 5' FROM THE WEST WALL, 12' ABOVE FINISHED FLOOR
FRONT
REAR
A/C UNIT
DOOR RAILS
CONDITIONED AIR OUT
ENCLOSURE AIR IN
1.375ø (1) OPTIONAL EXTERNAL HEATING OUT
POWER CABLE
EXTERNAL
.375ø (typ of 8)
STAINLESS STEEL QUARTER TURN LOCK
POURED GASKET
INNER PANEL
OMIT IF 30" OR LESS
VENT
WALL
BOTTOM VIEW
NEMA CABINET
SCALE: 1-1/2" = 1'-0"
EXHIBIT "B"
(Part 5 of 5 pg. 1)
PORT of MIAMI SECURITY ENHANCEMENT
PORT of MIAMI FPL SITE
MIAMI, FLORIDA
PHASE III - LEGEND, SITE PLAN and DETAILS
PROJECT No. 2008-030
DATE: AUGUST 19, 2008
SCALE: AS NOTED
DRAWN BY: CRH/NCC
CHECKED BY: PCL
LEE J. ENGINEERING, INC.
JAE Y. LEE P.E.
SHEET
P3E-1

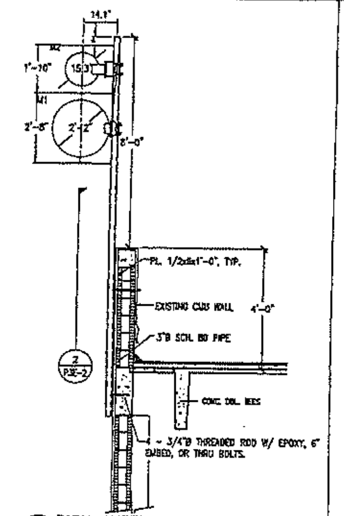

1 DISH ANTENNA MOUNT
P3E-2 SCALE: 1/2" = 1'-0"

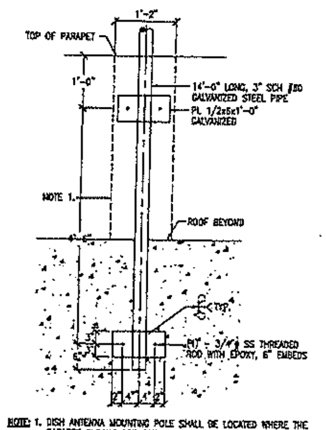

NOTE: 1. DISH ANTENNA MOUNTING POLE SHALL BE LOCATED WHERE THE PARAPET BLOCKS ARE CONCRETE FILLED. THESE ARE LOCATED APPROXIMATELY 8'-0" APART. VERIFY LOCATION BEFORE INSTALLATION.

2 A-A SECTION
P3E-2 SCALE: 1" = 1'-0"

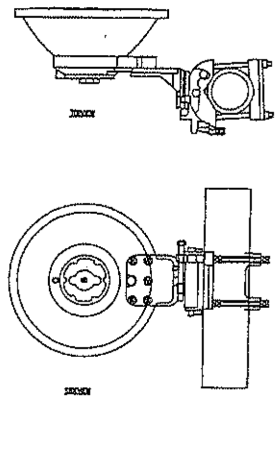

3 DISH ANTENNA
P3E-2 SCALE: 1-1/2" = 1'-0"
TYPE 1 - 0.6M
TYPE 2 - 0.3M

GENERAL STRUCTURAL NOTES

1. General: Radar, Antenna, and Camera are located 28 ft above grade on the CMU parapet.
2. Codes: Florida Building Code 2004/2006 Supplements, American Institute of Steel Construction and American Welding Society.
3. Live Loads:

Radar, 6'-0":	64 lbs
Antenna, 2'-0":	48 lbs
Antenna, 1'-0":	20 lbs
Camera:	15 lbs

4. Wind Loads:

Basic Wind Speed:	150 mph
Importance factor:	1.15
Exposure:	C
Enclosure:	Open

5. Materials:

Anchor Bolts	ASTM A276 Type 304 SS
Welds	AWS E70 or E60
Angles	ASTM A36
Pipes	ASTM A276 Type 316L SS
Steel Plates	ASTM A36

6. Structural steel shall conform to the AISC "Specification for design, fabrication and erection of structural steel for building" latest edition. Welded connections shall conform to the latest revised code of the American Welding society, AWS D1.1 using E070XX electrodes. All steel members and frames shall be hot dip galvanized per ASTM A123 or A386 where applicable. The pieces shall be immersed in zinc a duration to produce 2.5 oz per square foot on all surfaces. All welds shall be seal welded prior to galvanizing. All touch-up must be sandblasted and painted with Carboline Carbo Zinc11 (3mils dry film thickness) and top-coat of Carboline 188 Hi-Build Epoxy (5 mils dry film thickness) color to match galvanizing.
7. Any discrepancies between drawings and actual conditions shall be reported to Engineer immediately.

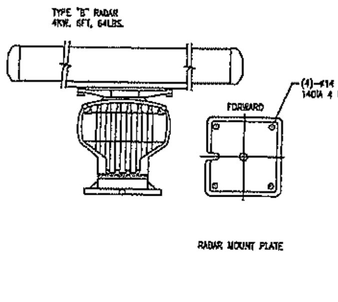

4 RADAR DETAIL
P3E-2 SCALE: 1/2" = 1'-0"

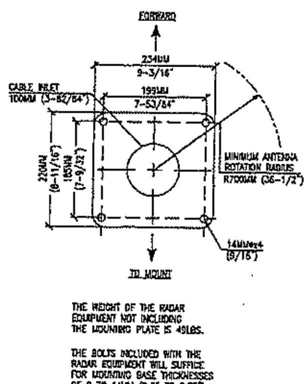

5 RADAR MOUNTING PLATE
P3E-1 SCALE: 3" = 1'-0"

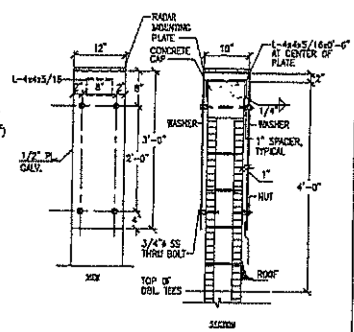

6 RADAR MOUNTING BRACKET DETAIL
P3E-2 SCALE: 1" = 1'-0"

NOTE: 1. DISH ANTENNA MOUNTING POLE SHALL BE LOCATED WHERE THE PARAPET BLOCKS ARE CONCRETE FILLED. THESE ARE LOCATED APPROXIMATELY 8'-0" APART. VERIFY LOCATION BEFORE INSTALLATION.

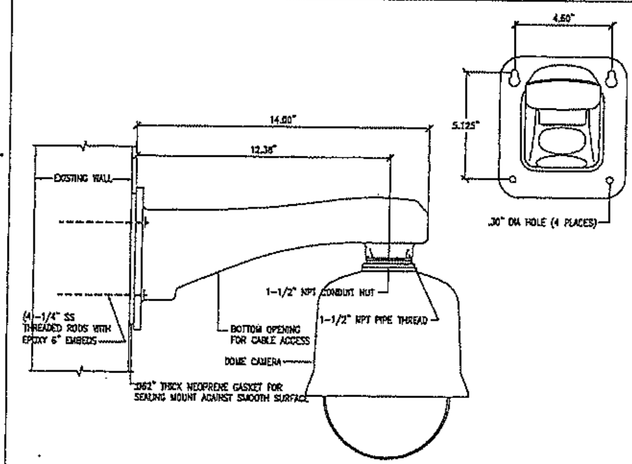

7 CAMERA PENDANT MOUNT - WALL
P3E-2 NOT TO SCALE

EXHIBIT "B" (Part 5 of 5 pg. 2)

LEE J. ENGINEERING, INC.
JAE Y. LEE P.E.

PORT of MIAMI SECURITY ENHANCEMENT

PORT of MIAMI FPL SITE
MIAMI, FLORIDA
PHASE III - COMMUNICATION DETAILS

PROJECT No.	2008-030
DATE	AUGUST 18, 2008
SCALE	AS NOTED
DRAWN BY	CRH/NCC
CHECKED BY	PCL
SHEET	P3E-2