OFFICIAL FILE COPY
CLERK OF THE BOARD
OF COUNTY COMMISSIONERS
MIAMI-DADE COUNTY, FLORIDA

Memorandum

MIAMI-DADE COUNTY

Date: September 3, 2014

To: Honorable Chairwoman Rebeca Sosa
and Members, Board of County Commissioners

From: Carlos A. Gimenez
Mayor

Agenda Item No. 8(F)(7)

Resolution No. R-754-14

Subject: Recommendation Ratifying a Contract Award for a Fire Station Internet Protocol Alerting System (RFP899) on behalf of the Miami-Dade Fire Rescue Department

---

Recommendation

It is recommended that the Board of County Commissioners (Board) ratify the award of *Contract RFP899* to US Digital Designs, Inc. for the provision of a Fire Station Internet Protocol Alerting System (IP Alerting System) for Miami-Dade Fire Rescue (MDFR). Attachment 1 to this transmittal memorandum is the award recommendation that is before the Board for ratification.

In December 2013, I advised the Board that it would be necessary, upon completion of an RFP process and selection of the highest-ranked, lowest-priced responsive and responsible proposer, to negotiate and award this contract prior to formal Board approval due to the potential loss of over one million dollars in grant funding received from the Federal Emergency Management Agency (FEMA). Attachment 2 to this transmittal memorandum is the December 2013 memorandum to the Board. The grant originally required full implementation and expenditure of the funding by May 2014. However, an extension to September 30, 2014, for use of the funding and implementation of the project, was granted by FEMA, and no additional extension time is expected to be granted. Despite the extension, the revised grant timelines did not provide sufficient time to present the Board with an award recommendation as well as install and fully implement the IP Alerting System by September 30, 2014. As such, an award to US Digital Designs, Inc. was made, subject to Board ratification, to not jeopardize federal spending timelines.

Scope

The scope of this item is countywide in nature.

Fiscal Impact and Funding Source

The total fiscal impact for the IP Alerting System, maintenance and support, retrofit work, spare and back-up units, additional future fire stations, and contingency, is $3,965,162, as detailed below:

Item	Cost
IP Alerting System	$2,150,021
Five years of Maintenance and Support	939,672
Cost of additional work to retrofit Miami-Dade Aviation stations, spare component and portable unit, and secondary (back-up) dispatch center	265,000
Allocation for installation at future fire stations	250,000
Subtotal Cost of System and Maintenance	**$3,604,693**
10% Contingency	360,469
Total	**$3,965,162**

As noted in my December 2013 memorandum, the initial IP Alerting System base cost was projected at $1.8 million. The original base price of the IP Alerting System was based on 65 fire stations, which did not include two additional stations that are currently under construction and several core components that are necessary ($133,000). Additionally, the cost of the primary dispatch center for all fire stations was approximately $217,000 more than originally anticipated.

There are also several items that are necessary to fully implement the system, that were not included in the December 2013 memorandum:

- Five years of maintenance and support costs equaling $939,672 (expected to begin in FY 2015-16 at $187,934 per year);
- Project contingency ($360,469);
- Work required to retrofit Miami-Dade Aviation Department, as well as a portable unit, spare components and back-up dispatch center ($265,000); and
- An allocation for future fire stations ($250,000).

The funding sources are as follows:

Department	Allocation	Funding Source	Contract Manager
Miami-Dade Fire Rescue	$1,015,974	FEMA Grant	Gregory Rubin
	1,759,516	Fire Impact Fees and Proprietary funds	
	939,672	General Fund	
	250,000	Capital Outlay Reserve	
Total	**$3,965,162**		

MDFR anticipates completion of the grant-funded portion of the project by September 30, 2014 and full IP Alerting System completion by January 30, 2015.

Track Record/Monitor
Fred Simmons, Jr. of the Internal Services Department is the Procurement Contracting Officer.

Delegated Authority
The County Mayor or the County Mayor's designee will have the authority to exercise, at their discretion, contract modifications, options-to-renew and other extensions in accordance with the terms and conditions of the contract.

Vendor Awarded
A Request for Proposals was issued under full and open competition on November 18, 2013. Two proposals were received in response to the solicitation. The proposals were evaluated by an Evaluation/Selection Committee. Extensive oral presentations were held, which included both proposers demonstrating how their system meets the County's requirements. At the conclusion of the evaluation/selection meetings, the Evaluation/Selection Committee recommended US Digital Designs, Inc. for negotiations. Through negotiations, an agreement was reached for a IP Alerting System that meets the requirements of the County, including an expedited installation schedule required to comply with the FEMA Grant funding deadline.

Awardee	Address	Principal
US Digital Designs, Inc.	1835 E. Sixth Street, #27 Tempe, AZ	Dominic Magnoni

Vendor Not Awarded	Reason for Not Recommending
Purvis Systems, Inc.	This proposer ranked lower than the recommended firm.

Due Diligence

Due diligence was conducted in accordance with the Internal Services Department's Procurement Guidelines to determine the contractor's responsibility, including verifying corporate status and that there are no performance or compliance issues. The lists that were referenced include: convicted vendors, debarred vendors, delinquent contractors, suspended vendors, and federal excluded parties. There were no adverse findings relating to Contractor responsibility. This information is being provided pursuant to Resolution R-187-12.

Applicable Ordinances and Contract Measures

- The two percent User Access Program provision does not apply.
- A Small Business Enterprise Selection Factor was not assigned to the solicitation. Local Preference was not applicable to the solicitation.
- The services being provided are not covered under the Living Wage Ordinance.

Background

Use of a modern IP Alerting System is a proven approach to reduce response time from the moment a 911 call is received to the arrival of fire rescue and is critical to MDFR operations. During emergency situations, response time is of the essence and every second could mean the difference between life and death, or serious injury. Effective dispatching is one of the most important functions of any public service agency. The new IP Alerting System will provide MDFR numerous operational, regulatory, and public safety-related benefits, such as:

- Assist MDFR in adhering to various National Fire Protection Association (NFPA) standards for response time and communications centers, and will support MDFR with its Insurance Service Office rating.
- Includes functions such as an alerting component and simultaneous dispatch that will provide the capability to dispatch multiple fire units at different stations across the County; therefore, improving response times, reducing call back-up during high call volume periods, and potentially saving lives.
- Improve call volume management by allowing dispatchers to automatically route and dispatch over the network to each individual station within seconds.
- Provide an overall improvement to the public safety of our residents through improved response time, which has a direct correlation to better outcomes in medical and fire-related emergencies, which, in turn, decreases the likelihood of loss of life and/or extensive property damage.

Once equipment is installed, training will be provided to dispatchers and support personnel to ensure proper use of equipment, and maintenance in accordance with the Assistance to Firefighters Grant Guidance. Over the next three years, MDFR will track the impact the new IP Alerting System has on performance, as this is the County's first IP Alerting System contract.

Genaro "Chip" Iglesias
Deputy Mayor

Memorandum

MIAMI-DADE COUNTY

Date: June 16, 2014

To: Carlos A. Gimenez
Mayor

From: Lester Sola, Director
Internal Services Department

Subject: Recommendation for Approval to Award: Fire Station Internet Protocol (IP) Alerting System for Miami-Dade Fire Rescue

---

RECOMMENDATION

It is recommended that the County Mayor approve Contract RFP899 in the amount of $3,965,162 to US Digital Designs, Inc. (USDD) to provide a Fire Station Internet Protocol (IP) Alerting System (System) for the Miami-Dade Fire Rescue (MDFR) Department. Upon execution of this contract award and completion of the bid protest period, the intent is to execute the agreements to allow MDFR to proceed with this project and avoid the potential loss of Federal Emergency Management Agency grant funding.

In December 2013, we transmitted a memorandum to the Board (attached) advising that it would be necessary to award this contract and begin implementation prior to formal Board approval given the grant deadlines. It is important to bring to your attention that the Board was advised in the December 2013 memorandum that the cost of the System was estimated at $1.8 million. However, we were not aware at that time that this amount did not include several items that are necessary to fully implement the system. Specifically, the five years of maintenance and support costs of $939,672 (expected to begin in FY 2015-16 for $187,934 a year), project contingency ($360,469), work required to retrofit Miami-Dade Aviation Department, as well as a portable unit, spare components and back-up dispatch center ($265,000), and allocation for future fire stations ($250,000). Additionally, the original base price of the System was based on 65 fire stations, and did not include two additional stations that are currently under construction, nor did the cost include several core system components that are necessary ($133,000), and the cost of the primary dispatch center, collectively, for all fire stations was approximately $217,000 more than originally anticipated. MDFR has been able to find the additional funding required for this project. The Board recommendation requesting ratification of this contract award is also attached to this award recommendation for your review, and, will be submitted to the Board for future Committee and full Board consideration.

BACKGROUND

A Request for Proposals was issued under full and open competition on November 18, 2013. Two proposals were received and subsequently evaluated by an Evaluation/Selection Committee. Extensive oral presentations were held, which included both proposers demonstrating how their system meets the County's requirements. The Evaluation/Selection Committee recommended US Digital Designs, Inc., who was the highest-ranked and lowest-priced, responsive and responsible proposer for negotiations. Through negotiations, an agreement was reached for a System that meets the requirements of the County, including an expedited installation schedule required to comply with the FEMA Grant funding deadline.

Use of a modern IP Alerting System is a proven approach to reduce response time from the moment a 911 call is received to the arrival of fire rescue. The new System will provide MDFR numerous operational, regulatory, and public safety-related benefits, such as:

- Will assist MDFR in adhering to various National Fire Protection Association (NFPA) standards for response time and communications centers, in meeting various industry benchmarks for fire response time, and will support MDFR with its Insurance Service Office rating.
- Includes functions such as an alerting component and simultaneous dispatch that will provide the capability to dispatch multiple fire units at different stations across the County, thus improving response times, reducing call back-up during high call volume periods, and potentially saving lives.
- Will improve call volume management by allowing dispatchers to automatically route and dispatch over the network to each individual station within seconds.

- Will provide an overall improvement to the public safety of our residents through decreased response time, which has a direct correlation to better outcomes in medical and fire-related emergencies, which, in turn, decreases the likelihood of loss of life and/or extensive property damage.

Once equipment is installed, training will be provided to dispatchers and support personnel to ensure proper use of equipment, and maintenance in accordance with the Assistance to Firefighters Grant Guidance.

USING/MANAGING AGENCY AND FUNDING SOURCE:

Department	Allocation	Funding Source	Contract Manager
Miami-Dade Fire Rescue	$1,015,974	FEMA Grant	Gregory Rubin
	$1,759,516	Fire Impact Fees and Proprietary funds	
	$939,672	General Fund	
	$250,000	Capital Outlay Reserve	
Total	**$3,965,162**		

CONTRACTING OFFICER: Fred Simmons, Jr.

VENDOR RECOMMENDED FOR AWARD:

Awardee	Address	Principal
US Digital Designs, Inc.	1835 E. Sixth Street, #27 Tempe, AZ	Dominic Magnoni

PERFORMANCE DATA: There are no performance issues with the recommended firm.

COMPLIANCE DATA: There are no compliance issues with the recommended firm.

VENDOR(S) NOT RECOMMENDED FOR AWARD:

Proposer(s)	Reason for Not Recommending
Purvis Systems, Inc.	Evaluation Scores/Ranking

Applicable Ordinances and Contract Measures

- The two percent User Access Program provision does not apply.
- A Small Business Enterprise Selection Factor was not assigned to the solicitation.
  Local Preference was not applicable to the solicitation.
- The services being provided are not covered under the Living Wage Ordinance.

Approved

Carlos A. Gimenez
Mayor

6-20-14
Date

c: Miriam Singer, CPPO, Assistant Director, Internal Services Department

Memorandum

MIAMI-DADE COUNTY

Date: December 13, 2013

To: Honorable Chairwoman Rebeca Sosa
and Members, Board of County Commissioners

From: Carlos A. Gimenez
Mayor

Subject: RFP 899 - Fire Rescue IP Alert System for Miami-Dade Fire Rescue Department

---

The memorandum serves to update the Board of County Commissioners (Board) on Request for Proposals 899 (RFP 899), which was advertised by the Internal Services Department (ISD) on behalf of the Miami-Dade Fire Rescue (MDFR) on November 19, 2013 for an Internet Protocol based Fire Station Alerting System (System).

MDFR received grant funding in May 2013 from the Federal Emergency Management Agency (FEMA) to fund a majority of the cost of this new System. However, the grant requirements associated with this funding require MDFR to expend the grant funding and have the new System in place by the end of April 2014. In light of these requirements, staff from ISD and MDFR are making all efforts to expedite the RFP process to ensure that MDFR can meet these requirements and avoid losing its grant funding.

As such, it is my intention, upon completion of a competitive RFP process and selection of the highest-ranked proposer, to proceed with the award of this contract and present the award to the Board retroactively. Given the timeframes mentioned above as well the benefits of implementation of this new System, which are discussed further below, I believe it is in the best interest of the County to proceed in this manner, and to advise the Board in advance of this action.

It is estimated that the cost of the System will be approximately $1.8 million. The funding sources that have been identified are $1,015,974 from the FEMA Assistance to Firefighters Grant, $531,000 in Fire Impact Fees, and $254,000 from the General Fund.

Internet Protocol Fire Station Alerting System

MDFR is seeking to solicit and implement a System similar to that used in hundreds of fire departments throughout the country, which will provide automated dispatching and fire station notification capabilities, interfaced with the County's Computer Aided Dispatch system, and will be deployed at 65 fire stations across the County. The new System will provide MDFR with numerous operational, regulatory and public safety-related benefits including the following:

- Assists MDFR in adhering to various National Fire Protection Association standards for response time and communications centers, in meeting various industry benchmarks for fire response time, and will support MDFR with its Insurance Service Office rating.
- Provides fire station alerting with the capability to dispatch multiple fire units at different stations simultaneously across the County, therefore improving response times, reducing call back-up during high call volume periods, and potentially saving lives.
- Improves call volume management by allowing dispatchers to automatically route and dispatch over the network to each individual station within seconds.
- Provides an overall improvement to the public safety of our residents through decreased response time, which has a direct correlation to better outcomes in medical and fire-related emergencies, which, in turn, decreases the likelihood of loss of life and/or extensive property damage.

Grant funding received from FEMA requires that a full and open competitive procurement process be used to select a vendor. ISD has worked closely with MDFR in developing RFP 899 (attached) and includes all applicable federal requirements associated with the FEMA grant.

Please contact Lester Sola, Director, Internal Services Department, if you have questions or concerns.

c: Robert A. Cuevas, Jr., County Attorney
Genaro "Chip" Iglesias, Deputy Mayor
Office of the Mayor Senior Staff
Lester Sola, Director, Internal Services Department
David Downey, Fire Chief, Fire Rescue
Charles Anderson, Commission Auditor

MEMORANDUM
(Revised)

TO: Honorable Chairwoman Rebeca Sosa
and Members, Board of County Commissioners

DATE: September 3, 2014

FROM: R. A. Cuevas, Jr.
County Attorney

SUBJECT: Agenda Item No. 8(F)(7)

Please note any items checked.

_____ **"3-Day Rule" for committees applicable if raised**

_____ **6 weeks required between first reading and public hearing**

_____ **4 weeks notification to municipal officials required prior to public hearing**

_____ **Decreases revenues or increases expenditures without balancing budget**

_____ **Budget required**

_____ **Statement of fiscal impact required**

_____ **Ordinance creating a new board requires detailed County Mayor's report for public hearing**

_____ **No committee review**

_____ **Applicable legislation requires more than a majority vote (i.e., 2/3's ____, 3/5's ____, unanimous _____) to approve**

_____ **Current information regarding funding source, index code and available balance, and available capacity (if debt is contemplated) required**

Approved _____ Mayor
Veto _____
Override _____

Agenda Item No. 8(F)(7)
9-3-14

RESOLUTION NO. R-754-14

RESOLUTION RATIFYING EXECUTION OF AN AGREEMENT IN THE AMOUNT OF $3,965,162 WITH US DIGITAL DESIGN, INC. TO OBTAIN AN INTERNET PROTOCOL (IP) ALERTING SYSTEM FOR MIAMI-DADE FIRE RESCUE, AUTHORIZING THE COUNTY MAYOR OR COUNTY MAYOR'S DESIGNEE TO EXERCISE ANY CANCELLATION AND RENEWAL PROVISIONS, AND TO EXERCISE ALL OTHER RIGHTS CONTAINED THEREIN CONTRACT NO. 889

WHEREAS, this Board desires to accomplish the purposes outlined in the accompanying memorandum, a copy of which is incorporated herein by reference,

NOW, THEREFORE, BE IT RESOLVED BY THE BOARD OF COUNTY COMMISSIONERS OF MIAMI-DADE COUNTY, FLORIDA, that this Board ratifies the execution of an agreement in the amount of $3,965,162 with US Digital Designs, Inc., in substantially the form attached hereto and made a part hereof, and authorizes the County Mayor or County Mayor's designee to execute same for and on behalf of Miami-Dade County and to exercise any cancellation and renewal provisions and all other rights contained therein.

The foregoing resolution was offered by Commissioner **Sally A. Heyman**, who moved its adoption. The motion was seconded by Commissioner **Lynda Bell** and upon being put to a vote, the vote was as follows:

Rebeca Sosa, Chairwoman			**aye**
Lynda Bell, Vice Chair			**aye**
Bruno A. Barreiro	**absent**	Esteban L. Bovo, Jr.	**aye**
Jose "Pepe" Diaz	**absent**	Audrey M. Edmonson	**aye**
Sally A. Heyman	**aye**	Barbara J. Jordan	**aye**
Jean Monestime	**aye**	Dennis C. Moss	**aye**
Sen. Javier D. Souto	**aye**	Xavier L. Suarez	**absent**
Juan C. Zapata	**aye**		

The Chairperson thereupon declared this resolution duly passed and adopted this 3rd day of September, 2014. This resolution shall become effective ten (10) days after the date of its adoption unless vetoed by the Mayor, and if vetoed, shall become effective only upon an override by this Board.

MIAMI-DADE COUNTY, FLORIDA
BY ITS BOARD OF
COUNTY COMMISSIONERS

HARVEY RUVIN, CLERK

By: Christopher Agrippa
Deputy Clerk

Approved by County Attorney as
to form and legal sufficiency.

Daniel Frastai

Fire Station IP Alerting System

Contract No. 899

THIS AGREEMENT is made and entered into as of this _____ day of _____ by and between US Digital Designs, Inc., a corporation organized and existing under the laws of the State of Arizona, having its principal office at 1835 E. Sixth Street, #27, Tempe, AZ 85281 (hereinafter referred to as the "Contractor"), and Miami-Dade County, a political subdivision of the State of Florida, having its principal office at 111 N.W. 1st Street, Miami, Florida 33128 (hereinafter referred to as the "County").

WITNESSETH:

WHEREAS, the Contractor has offered to provide a Fire Station IP Alerting System ("System" as further defined below), on a non-exclusive basis, that shall conform to the Scope of Services (Appendix A) and the requirements of this Agreement; and,

WHEREAS, in response to Miami-Dade County's Request for Proposals No. 899 ("RFP"), and all associated addenda and attachments, incorporated herein by reference, the Contractor has submitted a written proposal dated December 17, 2013, hereinafter referred to as the "Contractor's Proposal" which is incorporated herein by reference; and,

WHEREAS, the County desires to procure from the Contractor such System for the County, in accordance with the terms and conditions of this Agreement;

NOW, THEREFORE, in consideration of the mutual covenants and agreements herein contained, the parties hereto agree as follows:

ARTICLE 1. DEFINITIONS

The following words and expressions used in this Agreement shall be construed as follows, except when it is clear from the context that another meaning is intended:

a) The word "Agreement" to mean these terms and conditions, the Scope of Services-Appendix A, all other appendices and attachments hereto, all amendments issued hereto, the Contractor's Proposal, the RFP, and all associated addenda to the RFP.

b) The words "Contract Date" to mean the date on which this Agreement is effective.

c) The words "Contract Manager" to mean Miami-Dade County's Director, Internal Services Department, or the duly authorized representative designated to manage this Agreement.

d) The word "Contractor" to mean US Digital Designs, Inc., and its permitted successors and assigns.

e) The word "Days" to mean Calendar Days.

h) The words "Additional Work" to mean additions or deletions or modifications to the amount, type or value of the Services as required in this Agreement, as directed and/or approved by the County.

i) The words "Project Manager" to mean the duly authorized representative designated to manage the Services for system installation and initial start-up to be rendered under this Agreement.

k) The words "Scope of Services" to mean the description of the work to be performed by the Contractor contained in the document appended hereto as Appendix A. Any terms or provisions of the document attached as Appendix A that are in conflict with the other terms of this Agreement, or that do not specifically describe the work to be performed by the Contractor, are hereby stricken from this Agreement and shall be of no force or effect.

l) The word "Subcontractor" to mean any person, entity, firm or corporation, other than the employees of the Contractor, who furnishes labor and/or materials, in connection with the Services, whether directly or indirectly, on behalf and/or under the direction of the Contractor and whether or not in privity of contract with the Contractor.

m) The words "System Acceptance" to mean successful completion of the "Acceptance Test" as defined in Article 11 (a) (iii).

n) The word "Services" to mean all matters and things required to be done or provided by the Contractor in accordance with the provisions of this Agreement.

o) "Hardware" means a physically tangible electro-mechanical system or sub-system and associated documentation.

p) "Intellectual Property" means any and all rights of Contractor related to Contractor's Products and business existing from time to time under patent law, copyright law, trade secret law, trademark law, unfair competition law, and any and all other proprietary rights, and any and all derivative works, work product, applications, renewals, extensions and restorations thereof, now or hereafter in force and effect worldwide.

q) "Products" means Hardware, Software and other tangible goods, equipment, supplies and components developed or offered for sale by Contractor.

r) "Software" means software programs, including embedded software, firmware, executable code, linkable object code, and source code, including any updates, modifications, revisions, copies, documentation, and design data.

s) "System" means all Hardware and Software purchased by County directly from Contractor under this Agreement, or any purchase order or other arrangement that is used exclusively by County as part of its fire station alerting system, provided however, that the term "System" specifically excludes any components, hardware, or software provided by third parties, including without limitation County's computers, lap tops, computer peripherals, monitors, televisions, routers, switches, operating systems, computer programs, applications, internet and network connections, and any other parts

or items not provided to County directly by Contractor.

t) "Quote" means the document attached at Appendix C.

u) "Term" means the period of time this Agreement is in effect commencing on the Contract Date and ending on the date this Agreement is terminated according to its terms. "Term" includes the "Initial Term" and any "Additional Term" (as defined in Article 5).

v) "System Administrator" means the natural person designated by the County to manage, oversee, and be finally responsible for all aspects of the System.

w) Undefined technical terms, brand names, product descriptors, specifications and acronyms used throughout this Agreement shall have the meanings generally attributed to them in the fire station alerting industry.

x) Alt/Adds are all Products and Services described in the Quote as "Station Options," "Dispatch Center Options," "Fire Station 02 Upgrades," installed and uninstalled "Upgrade Options" for stations FS12, FS25, FS59, FS64, FS70, and installed and uninstalled "Demo Station Options."

ARTICLE 2. ORDER OF PRECEDENCE

If there is a conflict between or among the provisions of this Agreement, the order of precedence is as follows: 1) any amendments to these terms and conditions; 2) these terms and conditions; 3) the Scope of Services (Appendix A); 4) County Obligations (Appendix B); 5) Contractor Quote (Appendix C); 6) Contractor's Proposal; and 7) the Miami-Dade County's RFP No. 899, and any associated addenda and attachments thereof.

ARTICLE 3. RULES OF INTERPRETATION

a) References to a specified Article, section, subsection or schedule shall be construed as reference to that specified Article, section or subsection of, or schedule to this Agreement unless otherwise indicated.

b) Reference to any agreement or other instrument shall be deemed to include such agreement or other instrument as such agreement or other instrument may, from time to time, be modified, amended, supplemented, or restated in accordance with its terms.

c) The terms "hereof", "herein", "hereinafter", "hereby", "herewith", "hereto", and "hereunder" shall be deemed to refer to this Agreement.

d) The titles, headings, captions and arrangements used in these Terms and Conditions are for convenience only and shall not be deemed to limit, amplify or modify the terms of this Agreement, nor affect the meaning thereof.

ARTICLE 4. NATURE OF THE AGREEMENT

a) This Agreement incorporates and includes all prior negotiations, correspondence, conversations, agreements, and understandings applicable to the matters contained in this Agreement. The parties agree that there are no commitments, agreements, or understandings concerning the subject matter of this Agreement that are not contained in this Agreement, and that this Agreement contains the entire agreement between the parties as to all matters contained herein. Accordingly, it is agreed that no deviation from the terms hereof shall be predicated upon any prior representations or agreements, whether oral or written. It is further agreed that any oral representations or modifications concerning this Agreement shall be of no force or effect, and that this Agreement may be

modified, altered or amended only by a written amendment duly executed by both parties hereto or their authorized representatives.

b) The Contractor shall provide the services set forth in the Scope of Services and render full and prompt cooperation with the County in all aspects of the Services performed hereunder.

c) The County shall perform all of the "County Obligations" set forth in Appendix B.

d) The Contractor shall furnish all labor, materials, tools, supplies, and other items required to perform Services that are necessary for the completion of this Agreement.

e) The Contractor acknowledges that the County shall be responsible for making all policy decisions regarding the Scope of Services. The Contractor agrees to provide input on policy issues in the form of recommendations.

ARTICLE 5. CONTRACT TERM

The Agreement shall become effective on the Contract Date and shall continue for a period of 78 months or through completion of System installation, System Acceptance by the County, a one-year Warranty period, and five one-year maintenance periods (Collectively, the "Initial Term"). If not previously terminated, the County may exercise two five-year options to renew this Agreement (each an "Additional Term"), for maintenance and support, for Product, and Additional Work desired by the County. Should the County exercise its option, the County shall provide written notice thereof to Contractor at least sixty (60) days before expiration of the Initial Term or first Additional Term (each an "Exercise Date"). If the County fails to exercise its option to renew this Agreement for the Additional Term(s) on or before the applicable Exercise Date, this Agreement shall terminate at the end of the Initial Term or first Additional Term, as the case may be. This Agreement may be extended after the Exercise Date by mutual agreement between the County and the Contractor up to 180 days after expiration of the Initial Term or first Additional Term.

ARTICLE 6. NOTICE REQUIREMENTS

All notices required or permitted under this Agreement shall be in writing and shall be deemed sufficiently served if delivered by Registered or Certified Mail, with return receipt requested; or delivered personally; or delivered via fax or e-mail (if provided below) and followed with delivery of hard copy; and in any case addressed as follows:

(1) **to the County**

a) to the System Administrator :

Miami-Dade County Fire Rescue
Attention: Communications Chief, Greg Rubin or successor
Phone: 786-336-6702
E-mail: grubin@miamidade.gov

and,
b) to the Contract Manager:

Miami-Dade County
Internal Services Department, Procurement Management Division
111 N.W. 1st Street, Suite 1375
Miami, FL 33128-1974
Attention: Assistant Director
Phone: (305) 375-5548
Fax: (305) 375-2316
E-mail: fred@miamidade.gov or successor

(2) **To the Contractor**

US Digital Designs, Inc.
Attention: Dominic Magnoni
1835 East 6th Street, Suite 27
Tempe, Arizona 85281
Fax: 480-290-7892
Email: dmagnoni@usdd.com:

Either party may at any time designate a different address and/or contact person by giving notice as provided above to the other party. Such notices shall be deemed given upon receipt by the addressee.

ARTICLE 7. PAYMENT FOR SERVICES/AMOUNT OBLIGATED

Subject to Article 8, the Contractor warrants that it has reviewed the County's requirements and has asked such questions and conducted such other inquiries as the Contractor deemed necessary in order to determine the price the Contractor will charge to provide the Services to be performed under this Agreement. Subject to Article 8, the compensation for all Services performed under this Agreement, including all costs associated with such Services shall be as set forth in the Contractor Quote (Appendix C) and this Agreement. The County shall have no obligation to pay the Contractor any additional sum in excess of the amount set forth in the Quote, except for Additional Work and any corrections or modifications under Article 8. The County acknowledges that the prices set forth in the Quote for "Post Warranty Services" (as defined below) are based on the value of the basic System and are subject to increase under the terms of Article 46.1.

All Services undertaken by the Contractor before County's approval of this Agreement shall be at the Contractor's risk and expense, except as otherwise set forth herein.

With respect to travel costs and travel-related expenses, the Contractor agrees to adhere to Section 112.061 of the Florida Statutes as they pertain to out-of-pocket expenses, including employee lodging, transportation, per diem, and all miscellaneous cost and fees. The County

shall not be liable for any such expenses that have not been approved in advance, in writing, by the County.

ARTICLE 8. PRICING

Prices shall remain firm and fixed during the Initial Term. Pricing for Products and Services during any Additional Term shall be the Contractor's list prices then in effect, less 10% or such greater discount offered directly to any other public safety customer of Contractor within the United States. All Quotes and prices are subject to correction for errors and omissions, including the cost of any excise, use, or transaction levy, use fees, access fees, programs fees, audit fees, or other costs or reductions to the purchase price payable to the Contractor imposed by any code, statute, rule, regulation, executive order or program not specifically included as a line item on the Quote.

ARTICLE 9. METHOD AND TIMES OF PAYMENT

The Contractor agrees that under the provisions of this Agreement, as consideration for the Services and for those actual, reasonable and necessary costs incurred by the Contractor, which are directly attributable or properly allocable to Services provided by the Contractor, the Contractor may bill the County as follows:

a) Milestone: Project Design and Review meeting. Contractor may invoice County for 20% of project costs (not including post Warranty Service costs), plus $16,000 of Professional Liability insurance after Project Design and Review meeting. Additional Milestones will be Invoiced after initial delivery of Services equal to the 20% payment;

b) Milestone: Installation of each Dispatch Center (Primary and Back-up). Contractor may invoice 50% of costs per Dispatch Center;

c) Milestone: Acceptance and Testing of each Dispatch Center (Primary and Back-up). Contractor may invoice remaining costs per Dispatch Center;

d) Milestone: Installation and acceptance (as defined in Article 11 (a) (iii)) of each group of five (5) or more fire stations. Contractor may invoice for all costs related thereto;

e) Milestone: Delivery of "Portable FSAS" and "Spares", Contractor will invoice the County as quoted;

f) Milestone: Upon completion of all training and final acceptance of the System as described in Article 11, below, Contractor may invoice for all other Services previously rendered or delivered hereunder;

g) Upon completion and acceptance of each Purchase Order (PO) for Alt/Adds, Contractor may invoice for all Products related thereto; and for all installation and other Services previously rendered and related to such PO;

h) Services rendered under Article 46.1 Post Warranty Support and Maintenance shall be invoiced as described therein; and

i) Contractor may submit invoices for Additional Work as and when such Additional Work is completed and accepted.

All invoices shall be taken from the books of account kept by the Contractor, shall be supported by copies of payroll distribution, receipt bills or other documents reasonably required by the County, shall show the County's contract number, and shall have a unique invoice number assigned by the Contractor. All invoices due hereunder shall be paid in a timely manner and late payments shall bear interest as follows: In accordance with Florida Statutes, Section 218.74 and Section 2-8.1.4 of the Miami-Dade County Code, the time at which payment shall be due from the County or the Public Health Trust shall be forty-five (45) days from receipt of a proper invoice. The time at which payment shall be due to small businesses shall be thirty (30) days from receipt of a proper invoice. All payments due from the County or the Public Health Trust, and not made within the time specified by this section shall bear interest from thirty (30) days after the due date at the rate of one percent (1%) per annum on the unpaid balance. Further, proceedings to resolve disputes for payment of obligations shall be concluded by final written decision of the County Mayor, or his or her designee(s), not later than sixty (60) days after the date on which the proper invoice was received by the County or the Public Health Trust.

In accordance with Miami-Dade County Implementing Order 3-9, Accounts Receivable Adjustments, if money is owed by the Contractor to the County, whether under this Agreement or for any other purpose, the County reserves the right to retain such amount from payment due by County to the Contractor under this Agreement. Such retained amount shall be applied to the amount owed by the Contractor to the County. The Contractor shall have no further claim to such retained amounts which shall be deemed full accord and satisfaction of the amount due by the County to the Contractor for the applicable payment due herein.

Invoices and associated back-up documentation shall be submitted in duplicate by the Contractor to the County as follows:

Miami-Dade County Fire Rescue
9300 NW 41st Street
Doral, FL 33178
Attention: Communications Chief, Greg Rubin or successor

The County may at any time designate a different address and/or contact person by giving written notice to Contractor.

ARTICLE 10. INDEMNIFICATION AND INSURANCE

The Contractor shall indemnify and hold harmless the County and its officers, employees, agents and instrumentalities from any and all liability, losses or damages, including attorneys' fees and costs of defense, which the County or its officers, employees, agents or instrumentalities may incur as a result of claims, demands, suits, causes of actions or proceedings of any kind or nature arising out of, relating to or resulting from the performance of this Agreement by the Contractor or its employees, agents, servants, partners principals or Subcontractors. The Contractor shall pay all claims and losses in connection therewith and shall investigate and defend all claims, suits or actions of any kind or nature in the name of the County, where applicable, including appellate proceedings, and shall pay all costs, judgments, and attorney's fees which may issue thereon. The Contractor expressly understands and agrees that any insurance protection required by this Agreement or otherwise provided by the Contractor shall in no way limit the responsibility to indemnify, keep and save harmless and defend the County or its officers, employees, agents and instrumentalities as herein provided.

Upon County's notification, the Contractor shall furnish to the Internal Services Department, Procurement Management Division, Certificates of Insurance that indicate that insurance coverage has been obtained, which meets the requirements as outlined below:

1. Worker's Compensation Insurance for all employees of the Contractor as required by Florida Statute 440.

2. Commercial General Liability Insurance on a comprehensive basis in an amount not less than $1,000,000 combined single limit per occurrence for bodily injury and property damage. **Miami-Dade County must be shown as an additional insured with respect to this coverage. The mailing address of Miami-Dade County 111 N.W. 1st Street, Suite 1300, Miami, Florida 33128-1974, as the certificate holder, must appear on the certificate of insurance.**

3. Automobile Liability Insurance covering all owned, non-owned, and hired vehicles used in connection with the Services, in an amount not less than $300,000 combined single limit per occurrence for bodily injury and property damage.

4. Professional Liability Insurance in an amount of not less than $1,000,000 per claim.

All insurance policies required above shall be issued by companies authorized to do business under the laws of the State of Florida, with the following qualifications:

The company must be rated no less than "A-" as to management, and no less than "Class VII" as to financial strength by A.M. Best Company, Oldwick, New Jersey, or its equivalent, subject to the approval of the County Risk Management Division.

OR

The company must hold a valid Florida Certificate of Authority as shown in the latest "List of All Insurance Companies Authorized or Approved to Do Business in Florida", issued by the State of Florida Department of Financial Services and are members of the Florida Guaranty Fund.

CERTIFICATE HOLDER MUST READ: **MIAMI-DADE COUNTY**
111 NW 1ST STREET, SUITE 2340
MIAMI, FL 33128

Compliance with the foregoing requirements shall not relieve the Contractor of this liability and obligation under this section or under any other section in this Agreement.

Award of this Agreement is contingent upon the receipt of the insurance documents, as required, within ten (10) business days after award of the contract. If the insurance certificate is received within the specified timeframe but not in the manner prescribed in this Agreement, the Contractor shall have an additional five (5) business days to submit a corrected certificate to the County. If the Contractor fails to submit the required insurance documents in the manner prescribed in this Agreement within fifteen (15) business days after contract award, the Contractor shall be in default of the contractual terms and conditions and award of the Agreement may be rescinded, unless such timeframe for submission has been extended by the County.

The Contractor shall be responsible for ensuring that the insurance certificates required in conjunction with this Section remain in force for the duration of the contractual period of the Agreement, including any and all option years or extension periods that may be granted by the County. If insurance certificates are scheduled to expire during the contractual period, the Contractor shall be responsible for submitting new or renewed insurance certificates to the County at a minimum of thirty (30) calendar days in advance of such expiration. In the event

that expired certificates are not replaced with new or renewed certificates which cover the contractual period, the County shall suspend the Agreement until such time as the new or renewed certificates are received by the County in the manner prescribed herein; provided, however, that this suspended period does not exceed thirty (30) calendar days. Thereafter, the County may, at its sole discretion, terminate this Agreement.

Notwithstanding any other terms of this Article, if after Contractor submits its Certificates of Insurance to the Internal Services Department, Procurement Management Services Division, County authorizes Contractor or its Subcontractors to proceed with the performance of this Agreement, it shall be conclusively presumed and determined that the insurance is in full compliance with the requirements set forth above, and such requirements shall be deemed revised and amended to require only the coverages provided in the certificates submitted. These terms are effective and shall be controlling whether the certificates are provided before or after the Contract Date. If the Scope of Services are amended to require additional or different insurance coverages, Contractor shall provide County with revised insurance certificates pursuant to this Article.

ARTICLE 11. MANNER OF PERFORMANCE

a) The Contractor shall provide the Services described herein in a competent and professional manner in accordance with the terms and conditions of this Agreement, including the following:

i. *Training.* Pursuant to a mutually agreed upon schedule, Contractor shall provide training as set forth in the Scope of Services for the price stated in the Quote. Additional training, if requested by County, will be charged as Additional Work.

ii. *Station Installation Acceptance.* Upon completion of installation at each fire station or Dispatch Center, Contractor or its Subcontractor may prepare and deliver to County a written request for County's acceptance of the installation ("Request for Acceptance"). Upon presentation of the Request for Acceptance, County shall inspect the station installation and (i) accept the installation as presented or (ii) accept the installation subject to completion of specified tasks necessary for the installation to comply with the Scope of Work ("Punch List"); or (iii) reject the installation subject to a Punch List. The Punch List shall identify each task or item that is not in compliance with the Scope of Work and proposed dates for completion, which in all instances shall be reasonable, but not less than 14 days. If County accepts the installation subject to a Punch List, the installation shall be deemed accepted and Contractor shall address all Punch List items in a timely and reasonable fashion. If the County rejects the installation subject to a Punch List, Contractor shall address all Punch List items in a timely and reasonable fashion and thereafter may resubmit its Request for Acceptance pursuant to the terms if this Subsection.

iii. *Final System Acceptance Testing.* Within 60 days of the date the entire System installation is complete and basic functionality has been demonstrated to the System Administrator, Contractor and County shall jointly revise the acceptance testing procedure ("ATP") and perform a final test of the System ("Acceptance Test"). The ATP shall be based on the System standards and criteria set forth in the Scope of Services and the final configuration of the System as actually installed. Failure of the County to participate in the development of the ATP and to jointly perform the Acceptance Test with Contractor shall constitute County's irrevocable acceptance of the System. "Failure of the County to participate" means the County's action or in-action that makes it impossible to jointly complete an ATP and perform the Accepatance Test. Upon successful completion of the Acceptance

Test, County shall provide Contractor with a Certificate of Completion in a form acceptable to Contractor. If County believes the Acceptance Test was unsuccessful, and if County has complied with all County Obligations, County may within 15 days of the date on which the Acceptance Test is complete, provide Contractor with written notice specifying the standards or criteria not met ("Failure Notice"). If within 30 days of the Failure Notice, Contractor has not caused the System to meet the standards and criteria set forth in the Failure Notice, County may terminate this Contract for cause. Failure of County to provide a timely Failure Notice shall constitute County's irrevocable acceptance of the System.

b) The Contractor agrees that at all times it will employ, maintain and assign to the performance of the Services a sufficient number of competent and qualified professionals and other personnel to deliver the Services.

c) The Contractor warrants and represents that its personnel have the proper skill, training, background, knowledge, experience, rights, authorizations, and licenses as necessary to perform the Services described herein.

d) The parties shall at all times cooperate to coordinate their respective work efforts to effectively and efficiently pursue the project. Without limiting the foregoing, County agrees that Contractor may install all Dispatch Centers and Basic fire station Hardware prior to accepting any PO for Alt/Adds.

e) Contractor shall cooperate with County vendors including, but not limited to, CAD and radio vendors.

f) The Contractor shall comply with all provisions of all federal, state and local laws, statutes, ordinances, and regulations that are applicable to the performance of this Agreement.

ARTICLE 12. EMPLOYEES OF THE CONTRACTOR

All employees of the Contractor shall be subject to a background check and considered to be, at all times, employees of the Contractor under its sole direction and not employees or agents of the County. The Contractor shall supply competent employees. Miami-Dade County may require the Contractor to remove an employee who is careless, incompetent, insubordinate or otherwise objectionable and whose continued employment on County property is not in the best interest of the County. If provided by the County, at the County's expense, each employee shall have and wear proper identification. Contractor shall require its employees to comply with County regulations and protocols in the event that County issued identification is lost or stolen.

ARTICLE 13. INDEPENDENT CONTRACTOR RELATIONSHIP

The Contractor is, and shall be, in the performance of all Services and activities under this Agreement, an independent contractor, and not an employee, agent or servant of the County. All persons engaged in any of the Services performed pursuant to this Agreement shall at all times, and in all places, be subject to the Contractor's sole direction, supervision and control. The Contractor shall exercise control over the means and manner in which it and its employees perform the Services, and in all respects the Contractor's relationship and the relationship of its employees to the County shall be that of an independent contractor and not as employees and agents of the County.

The Contractor does not have the power or authority to bind the County in any promise,

agreement or representation other than specifically provided for in this Agreement.

ARTICLE 14. DISPUTE RESOLUTION

a) The Contractor hereby acknowledges that the County's Project Manager will determine in the first instance all questions of any nature whatsoever arising out of, under, or in connection with, or in any way related to or on account of, this Agreement including without limitations: questions as to the value, acceptability and fitness of the Services; questions as to either party's fulfillment of its obligations under the Contract; negligence, fraud or misrepresentation before or subsequent to acceptance of the Contractor's Proposal; questions as to the interpretation of the Scope of Services; and claims for damages, compensation and losses.

b) The Contractor must seek to resolve every difference concerning the Agreement with the Project Manager. In the event of a disagreement, the Contractor shall provide to the Project Manager the following:

(i) A written claim which shall set forth, in detail, the amount of additional compensation or time claimed and the basis for the claim and the amount claimed;

(ii) All materials utilized by the Contractor in preparation of its claim, including, but not limited to, all worksheets, quotations, calculations, pricing data, estimates and correspondence relating thereto;

(iii) Written evidence of, and support for, any claim, including evidence regarding liability, causation and damages, sufficient to enable the County's Project Manager to render a decision with respect to such claim; and

(iv) Such other information as the County's Project Manager may reasonably request.

c) In the event that the Contractor and the Project Manager are unable to resolve their difference, the Contractor may initiate a dispute in accordance with the procedures set forth in this Article. Exhaustion of these procedures shall be a condition precedent to any lawsuit permitted hereunder. Upon written request of the Contractor, the Project Manager will deliver a written response within 15 days.

d) In the event of an unresolved dispute, the parties to this Agreement authorize the County Mayor or designee, who may not be the Project Manager or anyone associated with this Project, acting personally, to decide all questions arising out of, under, or in connection with, or in any way related to or on account of the Agreement (including but not limited to claims in the nature of breach of contract, fraud or misrepresentation arising either before or subsequent to execution hereof. Any such dispute shall be brought, if at all, before the County Mayor within 15 days of the Project Manager's written decision. The Mayor or designee shall deliver a decision in writing within 30 days.

e) The County Mayor or designee may base this decision on such assistance as may be desirable, including advice of experts, but in any event shall base the decision on an independent and objective determination of whether Contractor's performance or any Deliverable meets the requirements of this Agreement and any specifications with respect thereto set forth herein. All such disputes shall be submitted in writing by the Contractor to the County Mayor or designee for a decision, together with all evidence and other pertinent information in regard to such questions, in order that a fair and impartial decision may be made. Whenever the County Mayor or designee is entitled to exercise discretion or judgment or to make a determination or form an opinion pursuant

to the provisions of this Article, such action shall be fair and impartial when exercised or taken. The County Mayor, or designee as appropriate, shall render a decision in writing and deliver a copy of the same to the Contractor. Contractor reserves the right to pursue any remedies available under law after exhausting the provisions of this Article including but not limited to reviewing the reasonableness of the Mayor's decision and whether or not Contractor is owed any additional compensation.

ARTICLE 15. MUTUAL OBLIGATIONS

a) This Agreement, including attachments and appendices to the Agreement, shall constitute the entire Agreement between the parties with respect hereto and supersedes all previous communications and representations or agreements, whether written or oral, with respect to the subject matter hereto unless acknowledged in writing by the duly authorized representatives of both parties.

b) Nothing in this Agreement shall be construed for the benefit, intended or otherwise, of any third party that is not a parent or subsidiary of a party or otherwise related (by virtue of ownership control or statutory control) to a party.

ARTICLE 16. QUALITY ASSURANCE/QUALITY ASSURANCE RECORD KEEPING

The Contractor shall maintain, and shall require that its Subcontractors and suppliers maintain, complete and accurate records to substantiate compliance with the requirements set forth in the Scope of Services. The Contractor and its Subcontractors and suppliers, shall retain such records, and all other documents relevant to the Services furnished under this Agreement for a period of three (3) years from the expiration date of this Agreement and any extension thereof.

ARTICLE 17. AUDITS

For a period of three years after the expiration of this agreement, Contractor shall grant access by the Commission Auditor (as defined in 2-481 of the Miami Dade County Code) to all financial and performance related records, property, and equipment purchased in whole or in part with government funds. The Contractor agrees to maintain a commercially reasonable accounting system that provides accounting records that are supported with adequate documentation, and adequate procedures for facilitating an audit by the County.

ARTICLE 18. SUBSTITUTION OF PERSONNEL

In the event the Contractor wishes to substitute personnel for the key personnel identified by the Contractor's Proposal, the Contractor must notify the County in writing and request written approval for the substitution at least ten (10) business days prior to effecting such substitution.

ARTICLE 19. CONSENT OF THE COUNTY REQUIRED FOR ASSIGNMENT

The Contractor shall not assign, transfer, convey or otherwise dispose of this Agreement, including its rights, title or interest in or to the same or any part thereof without the prior written consent of the County, which will not be unreasonably withheld.

ARTICLE 20. SUBCONTRACTUAL RELATIONS

a) If the Contractor will cause any part of this Agreement to be performed by a Subcontractor, the provisions of this Agreement will apply to such Subcontractor and its officers, agents and employees in all respects as if it and they were employees of the Contractor; and the Contractor will not be in any manner thereby discharged from its obligations and liabilities hereunder, but will be liable hereunder for all acts and negligence of the Subcontractor, its officers, agents, and employees, as if they were employees of the Contractor. The services performed by the Subcontractor will be subject to the provisions hereof as if performed directly by the Contractor.

b) The Contractor, before making any subcontract for any portion of the services, will state in writing to the County the name of the proposed Subcontractor, the portion of the Services which the Subcontractor is to do, the place of business of such Subcontractor, and such other information as the County may require. The County will have the right to require the Contractor not to award any subcontract to a person, firm or corporation reasonably disapproved by the County.

c) Before entering into any subcontract hereunder, the Contractor will inform the Subcontractor fully and completely of all provisions and requirements of this Agreement relating either directly or indirectly to the Services to be performed. Such Services performed by such Subcontractor will strictly comply with the requirements of this Agreement.

d) In order to qualify as a Subcontractor satisfactory to the County, in addition to the other requirements herein provided, the Subcontractor must be prepared to prove to the satisfaction of the County that it has the necessary facilities, skill and experience, and ample financial resources to perform the Services. To be considered skilled and experienced, the Subcontractor must show to the satisfaction of the County that it has satisfactorily performed services of the same general type which is required to be performed under this Agreement.

e) Upon written notice to Contractor, the County shall have the right to withdraw its consent to a subcontract if the subcontract will delay, prevent, or otherwise impair the performance of the Contractor's obligations under this Agreement. All Subcontractors are required to protect the confidentiality of the County's proprietary and confidential information. Contractor shall furnish to the County copies of all subcontracts between Contractor and its installation Subcontractors.

f) Contractor reserves the right to terminate any Subcontractor pursuant to the terms of the subcontract and, subject only to the terms of this Article, to engage any other competent Subcontractor to perform the Services required under this Agreement.

g) This Article shall not apply to any agreement between Contractor and any third party for procurement or manufacture of any goods, hardware, appliances, or equipment for resale by Contractor.

ARTICLE 21. ASSUMPTION, PARAMETERS, PROJECTIONS, ESTIMATES AND EXPLANATIONS

INTENTIONALLY OMITED

ARTICLE 22. SEVERABILITY

If this Agreement contains any provision found to be unlawful, the same shall be deemed to be of no effect and shall be deemed stricken from this Agreement without affecting the binding force of this Agreement as it shall remain after omitting such provision.

ARTICLE 23. TERMINATION AND SUSPENSION OF PERFORMANCE

a) The County may terminate this Agreement if an individual or corporation or other entity attempts to meet its contractual obligation with the County through fraud, misrepresentation or material misstatement.

b) The County may, as a further sanction, terminate or cancel any other contract(s) that such individual or corporation or other entity has with the County and that such individual, corporation or other entity shall be responsible for all direct and indirect costs associated with such termination or cancellation, including attorney's fees.

c) The foregoing notwithstanding, any individual, corporation or other entity which attempts to meet its contractual obligations with the County through fraud, misrepresentation or material misstatement may be debarred from County contracting for up to five (5) years in accordance with the County debarment procedures. The Contractor may be subject to debarment for failure to perform and all other reasons set forth in Section 10-38 of the County Code.

d) In addition to cancellation or termination as otherwise provided in this Agreement, the County may at any time, in its sole discretion, with or without cause, terminate this Agreement by written notice to the Contractor. For purposes of this Article, "cause" shall mean an "Event of Default," as defined below.

e) In addition to cancellation or termination as otherwise provided in this Agreement, Contractor may terminate this Agreement if the County causes and Event of Default as defined below.

f) In the event that the County or Contractor exercises its right to terminate this Agreement, the Contractor shall, upon receipt of such notice, unless otherwise directed by the County:

   i. stop work on the date specified in the notice ("the Effective Termination Date");

   ii. take such action as may be necessary for the protection and preservation of the County's materials and property;

   iii. cancel orders that are subject to cancelation;

   iv. assign to the County and deliver to any location designated by the County any non-cancelable orders and non-standard system inventory stocked by Contractor in performance of this Agreement;

   v. take no action which will increase the amounts payable by the County under this Agreement.

g) In the event of termination of this Agreement by County or Contractor the Contractor will submit an invoice pursuant to the terms of Article 9, and County shall pay Contractor for:

i. All work performed and that portion of the Services completed in accordance with the Agreement up to the Effective Termination Date;

ii. All non-cancelable orders for Products and Services;

iii. All Inventory stocked by Contractor in performance of this Agreement; and

iv. In the event of termination by the County without cause, or in the event of termination by Contractor for breach by the County, all other costs incurred by Contractor related to this Agreement.

h) All compensation pursuant to this Article is subject to audit.

ARTICLE 24. EVENT OF DEFAULT

a) An Event of Default shall mean a breach of this Agreement by the Contractor or County. Without limiting the generality of the foregoing, and in addition to those instances referred to herein as a breach, an Event of Default shall include the following:

i. the Contractor has not delivered the Services on a timely basis;

ii. the Contractor has refused or failed to supply enough properly skilled staff or personnel;

iii. the Contractor has without cause failed to make prompt payment to Subcontractors or suppliers for any Services;

iv. the Contractor has become insolvent (other than as interdicted by the bankruptcy laws), or has assigned the proceeds received for the benefit of the Contractor's creditors, or the Contractor has taken advantage of any insolvency statute or debtor/creditor law or if the Contractor's affairs have been put in the hands of a receiver;

v. the Contractor has failed to obtain the approval of the County where required by this Agreement;

vi. the Contractor has failed in the representation of any warranties stated herein;

vii. the County refuses or fails to perform any of its obligations in accordance with this Agreement, including, without limitation, to remit all payments in a timely manner.

b) If reasonable grounds for uncertainty exist with respect to the Contractor's ability to perform the Services or any portion thereof, the County may notice the Contractor thereof. The County's notice shall specifically state and describe the circumstances and details that constitute reasonable grounds for uncertainty. Contractor shall, within 15 days, or within such longer period of time as shall be reasonable under the circumstances, provide reasonable assurances to the County, in writing, of the Contractor's ability to address the causes described in the notice. In the event that the Contractor fails to respond to the County's request, within the prescribed timeframe, the County may:

i. treat such failure as a repudiation of this Agreement; and

ii. resort to any remedy for breach provided herein or at law, including but not limited to, taking over the performance of the Services or any part thereof either by itself or through others.

c) In the event the County shall terminate this Agreement for default, the County or its designated representatives may immediately take possession of all applicable equipment, materials, products, documentation, reports and data.

ARTICLE 25. NOTICE OF DEFAULT - OPPORTUNITY TO CURE

If an Event of Default occurs, the aggrieved party may so notify the defaulting party ("Default Notice"). The Default Notice shall specifically describe the nature of the alleged Event of Default and demand that the defaulting party cure such default within a specified reasonable time period, which shall not be less than 30 days ("Cure Period"). The Default Notice shall further specify the date the Contractor shall or intends to discontinue the Services upon the Termination Date. If the defaulting party fails to cure the Event of Default within the Cure Period, the aggrieved party may terminate this Agreement for cause as described in Article 23, above.

ARTICLE 26. REMEDIES IN THE EVENT OF DEFAULT

If an Event of Default occurs, the defaulting party shall be liable for all damages resulting from the default, including but not limited to:

a) lost revenues;

b) if Contractor is the defaulting party, the difference between the cost associated with procuring Services hereunder and the amount actually expended by the County for re-procurement of Services, including procurement and administrative costs; and

c) other direct damages.

Either party may also bring any suit or proceeding for specific performance or for an injunction. Any damages owed to the County under this Article shall be offset by the compensation owed to Contractor at termination under Article 23 (g). Any damages owed to the Contractor under this Article shall be offset by monies owed to County by the Contractor.

ARTICLE 27. PATENT AND COPYRIGHT INDEMNIFICATION

a) The Contractor shall not infringe on any copyrights, trademarks, service marks, trade secrets, patent rights, other intellectual property rights or any other third party proprietary rights in the performance of the Services.

b) The Contractor warrants that all Services furnished hereunder, including but not limited to: equipment, programs, documentation, software, analyses, applications, methods, ways, processes, and the like, do not infringe upon or violate any copyrights, trademarks, service marks, trade secrets, patent rights, other intellectual property rights or any other third party proprietary rights.

c) During the Term of this Agreement, the Contractor shall be liable and responsible for any and all claims made against the County for infringement of patents, copyrights, service marks, trade secrets or any other third party proprietary rights, by the use or supplying of any programs, documentation, software, analyses, applications, methods, ways, processes, and the like, in the course of performance or completion of, or in any way connected with, the Services, or the County's continued use of the Services furnished

hereunder (collectively "IP Claims"). Accordingly, the Contractor at its own expense, including the payment of attorney's fees, shall indemnify, and hold harmless the County and defend any action brought against the County with respect to any IP Claims.

d) In the event any of the Services or anything provided to the County hereunder, or portion thereof is held to constitute an infringement and its use is or may be enjoined, the Contractor shall have the obligation to (i) modify, or require that the applicable Subcontractor or supplier modify, the alleged infringing item(s) at its own expense, without impairing in any respect the functionality or performance of the item(s), or (ii) procure for the County, at the Contractor's expense, the rights provided under this Agreement to use the item(s).

e) The Contractor shall be solely responsible for determining and informing the County whether a prospective supplier or Subcontractor is a party to any litigation involving patent or copyright infringement, service mark, trademark, violation, or proprietary rights claims or is subject to any injunction which may prohibit it from providing any Deliverable hereunder. The Contractor shall enter into agreements with all suppliers and Subcontractors at the Contractor's own risk. The County may reject any Deliverable that it believes to be the subject of any such litigation or injunction, or if, in the County's judgment, use thereof would delay the performance of the Services or be unlawful.

ARTICLE 28. CONFIDENTIALITY

a) All materials, data, transactions of all forms, financial information, documentation, inventions, designs and methods obtained from the County in connection with the Services performed under this Agreement, or to which the County holds the proprietary rights, constitute "Confidential Information" and may not, without the prior written consent of the County, be used by the Contractor or its employees, agents, Subcontractors or suppliers for any purpose other than for the benefit of the County, unless required by law. In addition to the foregoing, all County employee information and County financial information shall be considered "Confidential Information" and shall be subject to all the requirements stated herein. Neither the Contractor nor its employees, agents, Subcontractors or suppliers may sell, transfer, publish, disclose, display, license or otherwise make available to others any part of such Confidential Information without the prior written consent of the County.

b) The Contractor shall advise each of its employees, agents, Subcontractors and suppliers who may be exposed to such Confidential Information of their obligation to keep such information confidential and shall promptly advise the County in writing if it learns of any unauthorized use or disclosure of the Confidential Information by any of its employees or agents, or Subcontractor's or supplier's employees, present or former. In addition, the Contractor agrees to cooperate fully and provide any assistance necessary to ensure the confidentiality of the Confidential Information.

c) It is understood and agreed that in the event of a breach of this Article damages may not be an adequate remedy and the County shall be entitled to injunctive relief to restrain any such breach or threatened breach. Unless otherwise requested by the County, upon the completion of the Services performed hereunder, the Contractor shall immediately turn over to the County all such Confidential Information existing in tangible form, and no copies thereof shall be retained by the Contractor or its employees, agents, Subcontractors or suppliers without the prior written consent of the County. A certificate evidencing compliance with this provision and signed by an officer of the Contractor shall accompany such materials.

d) The term "Confidential Information" shall not include any information that (i) at the time of disclosure or thereafter is generally available to the public other than as a result of disclosure by Contractor in violation of this Agreement; (ii) becomes available to Contractor on a non-confidential basis from an independent source, or (iii) has been acquired or developed independently without violating this Agreement.

ARTICLE 29. PROPRIETARY INFORMATION

As a political subdivision of the State of Florida, Miami-Dade County is subject to the stipulations of Florida's Public Records Law.

The Contractor acknowledges that all computer software in the County's possession may constitute or contain information or materials which the County has agreed to protect as proprietary information from disclosure or unauthorized use and may also constitute or contain information or materials which the County has developed at its own expense, the disclosure of which could harm the County's proprietary interest therein.

During the Term, the Contractor will not use directly or indirectly for itself or for others, or publish or disclose to any third party, or remove from the County's property, any computer programs, data compilations, or other software which the County has developed, has used or is using, is holding for use, or which are otherwise in the possession of the County (hereinafter "Third Party Software"). All third-party license agreements must also be honored by the contractors and their employees, except as authorized by the County and, if the Third Party Software has been leased or purchased by the County, all hired party license agreements must also be honored by the contractors' employees with the approval of the lessor or Contractors thereof. This includes mainframe, minis, telecommunications, personal computers and any and all information technology software.

The Contractor will report to the County any information discovered or which is disclosed to the Contractor which may relate to the improper use, publication, disclosure or removal from the County's property of any information technology software and hardware and will take such steps as are within the Contractor's authority to prevent improper use, disclosure or removal.

If the Contractor as part of this agreement provides the County with documents that contain trade secrets, as defined in Florida Statutes Section 815.081, then in accordance with Florida Statutes section 119.07191(f), those trade secrets may not be disclosed by the County to any third parties and must be maintained confidential. In order for this obligation on the County to apply, Contractor must properly identify and mark those documents which contain trade secrets as "confidential trade secret information.

ARTICLE 30. PROPRIETARY RIGHTS

a) County hereby agrees and acknowledges that Contractor owns all rights, title, and interest in and to the Intellectual Property. County agrees to not remove, obscure, or alter Contractor's or any third party's copyright notice, trademarks, or other proprietary rights notices affixed to or contained within or accessed in conjunction with or through Contractor's Products. Nothing herein shall be deemed to give, transfer, or convey to County any rights in the Intellectual Property other than the license to use the Software, as set forth below.

b) At all times that County is in compliance with the terms of this Agreement and all other agreements between the parties, County shall have a non-exclusive, non-transferable, fully paid license to use the Software delivered under this Agreement in conjunction with

the System.

c) Except as set forth in the foregoing license, County shall not have any rights in the Intellectual Property, including the right to any derivative works, work product, or jointly developed works related to Contractor's Products and business existing from time to time.

ARTICLE 31. VENDOR REGISTRATION/CONFLICT OF INTEREST

a) Vendor Registration. The Contractor shall be a registered vendor with the County – Internal Services Department, Procurement Management Division, for the duration of this Agreement. In becoming a Registered Vendor with Miami-Dade County, the Contractor confirms its knowledge of and commitment to comply with the following:

1. ***Miami-Dade County Ownership Disclosure Affidavit***
(Section 2-8.1 of the County Code)

2. ***Miami-Dade County Employment Disclosure Affidavit***
(Section 2.8-1(d)(2) of the County Code)

3. ***Miami-Dade Employment Drug-free Workplace Certification***
(Section 2-8.1.2(b) of the County Code)

4. ***Miami-Dade Disability and Nondiscrimination Affidavit***
(Section 2-8.1.5 of the County Code*)*

5. ***Debarment Disclosure Affidavit***
(Section 10.38 of the County Code)

6. ***Miami-Dade County Vendor Obligation to County Affidavit***
(Section 2-8.1 of the County Code)

7. ***Miami-Dade County Code of Business Ethics Affidavit***
(Section 2-8.1(i) and 2-11(b)(1) of the County Code through (6) and (9) of the County Code and Section 2-11.1(c) of the County Code)

8. ***Miami-Dade County Family Leave Affidavit***
(Article V of Chapter 11 of the County Code)

9. ***Miami-Dade County Living Wage Affidavit***
(Section 2-8.9 of the County Code)

10. ***Domestic Leave and Reporting Affidavit***
(Article 8, Section 11A-60 11A-67 of the County Code)

11. ***Subcontracting Practices***
(Ordinance 97-35)

12. ***Subcontractor /Supplier Listing***
(Section 2-8.8 of the County Code)

13. ***Environmentally Acceptable Packaging***
(Resolution R-738-92)

14. ***W-9 and 8109 Forms***
(as required by the Internal Revenue Service)

15. ***FEIN Number or Social Security Number***
In order to establish a file, the Contractor's Federal Employer Identification Number (FEIN) must be provided. If no FEIN exists, the Social Security Number of the owner or individual must be provided. This number becomes Contractor's "County Vendor Number". To comply with Section 119.071(5) of the Florida Statutes relating to the collection of an individual's Social Security Number, be aware that the County requests the Social Security Number for the following purposes:
    - Identification of individual account records
    - To make payments to individual/Contractor for goods and services provided to Miami-Dade County

- Tax reporting purposes
- To provide a unique identifier in the vendor database that may be used for searching and sorting departmental records

16. ***Office of the Inspector General***
(Section 2-1076 of the County Code)

17. ***Small Business Enterprises***
The County endeavors to obtain the participation of all small business enterprises pursuant to Sections 2-8.2, 2-8.2.3 and 2-8.2.4 of the County Code and Title 49 of the Code of Federal Regulations.

18. ***Antitrust Laws***
By acceptance of any contract, the Contractor agrees to comply with all antitrust laws of the United States and the State of Florida.

b) Conflict of Interest. Section 2-11.1(d) of Miami-Dade County Code requires that any County employee or any member of the employee's immediate family who has a controlling financial interest, direct or indirect, with Miami-Dade County or any person or agency acting for Miami-Dade County, competing or applying for a contract, must first request a conflict of interest opinion from the County's Ethics Commission prior to their or their immediate family member's entering into any contract or transacting any business through a firm, corporation, partnership or business entity in which the employee or any member of the employee's immediate family has a controlling financial interest, direct or indirect, with Miami-Dade County or any person or agency acting for Miami-Dade County. Any such contract or business engagement entered in violation of this subsection, as amended, shall be rendered voidable. For additional information, please contact the Ethics Commission hotline at (305) 579-2593.

ARTICLE 32. INSPECTOR GENERAL REVIEWS

a) ***Independent Private Sector Inspector General Reviews***
Pursuant to Miami-Dade County Administrative Order 3-20, the County has the right to retain the services of an Independent Private Sector Inspector General (hereinafter "IPSIG"), whenever the County deems it appropriate to do so. Upon written notice from the County, the Contractor shall make available to the IPSIG retained by the County, all requested records and documentation pertaining to this Agreement for inspection and reproduction. The County shall be responsible for the payment of these IPSIG services, and under no circumstance shall the Contractor's prices and any changes thereto approved by the County, be inclusive of any charges relating to these IPSIG services. The terms of this provision apply to the Contractor, its officers, agents, employees, Subcontractors and assignees. Nothing contained in this provision shall impair any independent right of the County to conduct an audit or investigate the operations, activities and performance of the Contractor in connection with this Agreement. The terms of this Article shall not impose any liability on the County by the Contractor or any third party.

b) ***Miami-Dade County Inspector General Review***
The Miami-Dade County Inspector General is authorized and empowered to review past, present and proposed County and Public Health Trust contracts, transactions, accounts, records and programs. In addition, the Inspector General has the power to subpoena witnesses, administer oaths, require the production of records and monitor existing projects and programs. Monitoring of an existing project or program may include a report concerning whether the project is on time, within budget and in conformance with plans, specifications and applicable law. The Inspector General is empowered to analyze the necessity of and reasonableness of proposed change orders to the Contract. The Inspector General is empowered to retain the services of independent private sector inspectors general (IPSIG) to audit, investigate, monitor, oversee, inspect and review operations, activities, performance and procurement process, including but not limited to

project design, specifications, proposal submittals, activities of the Contractor, its officers, agents and employees, lobbyists, County staff and elected officials to ensure compliance with contract specifications and to detect fraud and corruption.

c) Upon written notice to the Contractor from the Inspector General or IPSIG retained by the Inspector General, the Contractor shall make all requested records and documents available to the Inspector General or IPSIG for inspection and copying. The Inspector General and IPSIG shall have the right to inspect and copy all documents and records in the Contractor's possession, custody or control which, in the Inspector General's or IPSIG's sole judgment, pertain to performance of the contract, including, but not limited to original estimate files, change order estimate files, worksheets, proposals and agreements form and which successful and unsuccessful Subcontractors and suppliers, all project-related correspondence, memoranda, instructions, financial documents, construction documents, proposal and contract documents, back-charge documents, all documents and records which involve cash, trade or volume discounts, insurance proceeds, rebates, or dividends received, payroll and personnel records, and supporting documentation for the aforesaid documents and records.

d) This Agreement is exempt from the 0.25% audit fee.

ARTICLE 33. LOCAL, STATE, AND FEDERAL COMPLIANCE REQUIREMENTS

Contractor agrees to comply, subject to applicable professional standards, with the provisions of any and all applicable Federal, State and the County orders, statutes, ordinances, rules and regulations which may pertain to the Services required under this Agreement, including, but not limited to:

a) Equal Employment Opportunity (EEO), in compliance with Executive Order 11246 as amended and applicable to this Contract.

b) Miami-Dade County Florida, Department of Small Business Development Participation Provisions, as applicable to this Contract.

c) Environmental Protection Agency (EPA), as applicable to this Contract.

d) Miami-Dade County Code, Chapter 11A, Article 3. All contractors and subcontractors performing work in connection with this Contract shall provide equal opportunity for employment without regard to race, color, religion, ancestry, national origin, sex, pregnancy, age, disability, marital status, familial status, sexual orientation, or veteran status. The aforesaid provision shall include, but not be limited to, the following: employment, upgrading, demotion or transfer, recruitment advertising; layoff or termination; rates of pay or other forms of compensation; and selection for training, including apprenticeship. The Contractor agrees to post in a conspicuous place available for employees and applicants for employment, such notices as may be required by the Dade County Fair Housing and Employment Commission, or other authority having jurisdiction over the work setting forth the provisions of the nondiscrimination law.

e) "Conflicts of Interest" Section 2-11 of the County Code, and Ordinance 01-199.

f) Miami-Dade County Code Section 10-38 "Debarment".

g) Miami-Dade County Ordinance 99-5, codified at 11A-60 et. seq. of Miami-Dade Code pertaining to complying with the County's Domestic Leave Ordinance.

h) Miami-Dade County Ordinance 99-152, prohibiting the presentation, maintenance, or prosecution of false or fraudulent claims against Miami-Dade County.

The Contractor shall hold all licenses and/or certifications, obtain and pay for all permits and/or inspections, and comply with all laws, ordinances, regulations and building code requirements applicable to the Services required herein. Damages, penalties, and/or fines imposed on the County or Contractor for failure to obtain and maintain required licenses, certifications, permits and/or inspections shall be borne by the Contractor. The Project Manager shall verify the certification(s), license(s), permit(s), etc. for the Contractor prior to authorizing work and as needed.

Notwithstanding any other provision of this Agreement, Contractor shall not be required pursuant to this Agreement to take any action or abstain from taking any action if such action or abstention would, in the good faith determination of the Contractor, constitute a violation of any law or regulation to which Contractor is subject, including but not limited to laws and regulations requiring that Contractor conduct its operations in a safe and sound manner.

ARTICLE 34. NONDISCRIMINATION

During the performance of this Agreement, Contractor agrees to not discriminate against any employee or applicant for employment because of race, color, religion, ancestry, national origin, sex, pregnancy, age, disability, marital status, familial status, sexual orientation, or veteran status, and will take affirmative action to ensure that employees and applicants are afforded equal employment opportunities without discrimination. Such action shall be taken with reference to, but not limited to: recruitment, employment, termination, rates of pay or other forms of compensation, and selection for training or retraining, including apprenticeship and on the job training.

By entering into this Contract, the Contractor attests that it is not in violation of the Americans with Disabilities Act of 1990 (and related Acts) or Miami-Dade County Resolution No. R-385-95. If the Contractor or any owner, subsidiary or other firm affiliated with or related to the Contractor is found by the responsible enforcement agency or the County to be in violation of the Act or the Resolution, such violation shall render this Contract void. This Contract shall be void if the Contractor submits a false affidavit pursuant to this Resolution or the Contractor violates the Act or the Resolution during the term of this Contract, even if the Contractor was not in violation at the time it submitted its affidavit.

ARTICLE 35. CONFLICT OF INTEREST

The Contractor represents that:

a) No officer, director, employee, agent, or other consultant of the County or a member of the immediate family or household of the aforesaid has directly or indirectly received or been promised any form of benefit, payment or compensation, whether tangible or intangible, in connection with the award of this Agreement.

b) There are no undisclosed persons or entities interested with the Contractor in this Agreement. This Agreement is entered into by the Contractor without any connection with any other entity or person making a proposal for the same purpose, and without collusion, fraud or conflict of interest. No elected or appointed officer or official, director, employee, agent or other consultant of the County, or of the State of Florida (including elected and appointed members of the legislative and executive branches of government), or a member of the immediate family or household of any of the aforesaid:

i) is interested on behalf of or through the Contractor directly or indirectly in any

manner whatsoever in the execution or the performance of this Agreement, or in the services, supplies or work, to which this Agreement relates or in any portion of the revenues; or

ii) is an employee, agent, advisor, or consultant to the Contractor or to the best of the Contractor's knowledge any Subcontractor or supplier to the Contractor.

c) Neither the Contractor nor any officer, director, employee, agency, parent, subsidiary, or affiliate of the Contractor shall have an interest which is in conflict with the Contractor's faithful performance of its obligation under this Agreement; provided that the County, in its sole discretion, may consent in writing to such a relationship, provided the Contractor provides the County with a written notice, in advance, which identifies all the individuals and entities involved and sets forth in detail the nature of the relationship and why it is in the County's best interest to consent to such relationship.

d) The provisions of this Article are supplemental to, not in lieu of, all applicable laws with respect to conflict of interest. In the event there is a difference between the standards applicable under this Agreement and those provided by statute, the stricter standard shall apply.

e) In the event Contractor has no prior knowledge of a conflict of interest as set forth above and acquires information which may indicate that there may be an actual or apparent violation of any of the above, Contractor shall promptly bring such information to the attention of the County's Project Manager. Contractor shall thereafter cooperate with the County's review and investigation of such information, and comply with the instructions Contractor receives from the Project Manager in regard to remedying the situation.

ARTICLE 36. PRESS RELEASE OR OTHER PUBLIC COMMUNICATION

a) Except for Confidential Information, as described above, Contractor may use any information generally available to the public regarding this Agreement and the project in general in its marketing and promotional materials and communications.

d) During the Term of this Agreement, Contractor may request to take, make or obtain images, pictures, photographs, commentary, and video and audio recordings of County's System and property and reproductions of the same in whole or in part, either digitally or in any other medium now known or later discovered (collectively "Images") and may request County to provide testimonials, endorsements, feedback or other written or oral comments concerning County's experience with the System (collectively "Testimonials"). Notwithstanding the foregoing, Contractor is authorized to take still photos of installation of System equipment in dispatch center, telecommunications area within fire stations, and installation of System hardware in fire stations. No installation photos may contain County personnel.

ARTICLE 37. BANKRUPTCY

The County reserves the right to terminate this Agreement, if, during the term of any contract the Contractor has with the County, the Contractor becomes involved as a debtor in a bankruptcy proceeding, or becomes involved in a reorganization, dissolution, or liquidation proceeding, or if a trustee or receiver is appointed over all or a substantial portion of the property of the Contractor under federal bankruptcy law or any state insolvency law.

ARTICLE 38. GOVERNING LAW

This Agreement, including appendices, and all matters relating to this Agreement (whether in

contract, statute, tort (such as negligence), or otherwise) shall be governed by, and construed in accordance with, the laws of the State of Florida. Venue shall be Miami-Dade County.

ARTICLE 39. COUNTY USER ACCESS PROGRAM ("UAP")

The County affirmatively states and agrees that this Agreement is not subject to the UAP or any fees associated therewith.

ARTICLE 40. FIRST SOURCE HIRING REFERRAL PROGRAM

Pursuant to Section 2-2113 of the Code of Miami-Dade County, for all contracts for goods and services, the Contractor, prior to hiring to fill each vacancy arising under a County contract shall (1) first notify the South Florida Workforce Investment Board ("SFWIB"), the designated Referral Agency, of the vacancy and list the vacancy with SFWIB according to the Code, and (2) make good faith efforts as determined by the County to fill a minimum of fifty percent (50%) of its employment needs under the County contract through the SFWIB. If no suitable candidates can be employed after a Referral Period of three to five days, the Contractor is free to fill its vacancies from other sources. Contractor will be required to provide quarterly reports to the SFWIB indicating the name and number of employees hired in the previous quarter, or why referred candidates were rejected. Sanctions for non-compliance shall include, but not be limited to: (i) suspension of contract until Contractor performs obligations, if appropriate; (ii) default and/or termination; and (iii) payment of $1,500/employee, or the value of the wages that would have been earned given the noncompliance, whichever is less. Registration procedures and additional information regarding the FSHRP are available at https://iapps.southfloridaworkforce.com/firstsource/.

ARTICLE 41. PUBLIC RECORDS AND CONTRACTS FOR SERVICES PERFORMED ON BEHALF OF A PUBLIC AGENCY

INTENTIALLY OMITTED

ARTICLE 42. SURVIVAL

The parties acknowledge that the respective obligations of the Contractor and the County under this Agreement, which by nature would continue beyond the termination, cancellation or expiration thereof, shall survive termination, cancellation or expiration hereof.

ARTICLE 43. INDIVIDUALLY IDENTIFIABLE HEALTH INFORMATION and/or PROTECTED HEALTH INFORMATION

INTENTIONALLY OMITTED

ARTICLE 44. TERMINATION FOR CONVENIENCE OF MIAMI-DADE COUNTY

SEE ARTICLE 23

ARTICLE 45. FORCE MAJEURE

45.1 Except as otherwise expressly provided herein, neither party hereto shall be considered in default in the performance of its obligations hereunder to the extent that such performance is prevented or delayed by any cause, existing or future, which is not within the reasonable control

of such party including, but not limited to, acts of God or the public enemy, fires, explosions, riots, strikes (not including strikes of the Contractor's staff personnel), terrorism or war. Notwithstanding the foregoing, the failures of any of the Contractor's suppliers, Subcontractors, or the like shall not excuse the Contractor's performance except to the extent those failures are due to any cause without the fault and reasonable control of such suppliers, Subcontractors, or the like.

45.2 In the event that such failure or delay occurs, the affected party shall notify the other party of the occurrence thereof as soon as possible and the parties shall discuss the best way to resolve the event of force majeure.

Article 46. Warranty

A) New System Warranty. A new system warranty as described and limited in this Article ("Warranty") is provided to Miami-Dade County ("County") together with the Services to be delivered hereunder at no additional charge. Subject to the terms, conditions and limitations contained herein, Contractor warrants that the Products purchased under this Agreement and integrated into the System shall not contain any material defects and shall function in conformity with the descriptions and specifications set forth in this Agreement for a period of 18 months from the Contract Date ("Warranty Period").

B) Hardware Defects. If a Hardware defect arises and a valid claim is made within the Warranty Period, Contractor shall either (1) repair the hardware defect at no charge, using new parts or parts equivalent to new in performance and reliability or (2) exchange the product with a product that is new, and functionally equivalent to the original product. Any replacement product or part, including a user-installable part that has been installed in accordance with instructions provided by Contractor, shall remain under warranty during the Warranty Period or for 90 days from the date of repair, whichever is later. When a product or part is exchanged, any replacement item becomes the County's property and the replaced item becomes the property of Contractor. Parts provided by Contractor in fulfillment of its warranty obligation must be used in the System for which warranty service is claimed. Contractor shall be responsible for and bear all risks and costs of shipping any Hardware to Contractor for repair. Contractor shall be responsible for and bear all risks and costs of returning any Hardware to County after repair or replacement. Replacement Hardware will be returned to County configured as it was when the Hardware was originally purchased, subject to applicable updates.

C) System Maintenance and Support. During the Warranty Period, Contractor shall provide Software updates and maintenance for the System (collectively the "Support Services"). The Support Services shall include the following:

i) Technical phone support Monday through Friday from 08:00 to 17:30 MST, excluding Contractor holidays;

ii) Remote access support Monday through Friday from 08:00 to 17:30 MST, excluding Contractor holidays;

iii) Telephonic emergency support 24 hours a day for County's System Administrator or designee (as described below in Appendix B) provided by Contractor's senior staff and engineers ("Emergency Support") in the event of a "Mission Critical Failure" (as defined below); and

iv) Updates for all System Software, as and when released by Contractor.

D) Warranty Claims. Prior to making a Warranty claim or requesting Support Services,

County is encouraged to review Contractor's online help resources and the troubleshooting guide specific to the County's System. Thereafter, to make a valid claim hereunder, County must contact Contractor technical support and describe the problem or defect with specificity. The first such contact must occur during the Warranty Period. Contractor's technical support contact information can be found on Contractor's web site at http://stationalerting.com/home/about-usdd/contact-usdd/. County will assist in diagnosing defects, follow Contractor's technical instructions, and cooperate in the diagnostic process.

E) Mission Critical Failure. "Mission Critical Failure" means a failure in the materials, workmanship or design of the System that causes any fire station served by the System to be incapable of receiving dispatches through all communications paths connected to the System, provided however, that any such failure caused by operator error, internet or telephony service outages, misuse or neglect of the System or any cause outside of Contractor's direct control does not constitute a Mission Critical Failure. County's use of Emergency Support, in the absence of a Mission Critical Failure, shall constitute Additional Work under this Agreement, which will be charged at Contractor's then current rates. In delivering Emergency Support for Mission Critical Failures, Contractor shall cooperate with County's other vendors, including without limit Motorola representatives.

F) Exclusions and Limitations. Contractor's obligations under this Warranty are contingent on the County providing Contractor with VPN access or other means for remote access to the System for remote diagnosis. Contractor does not warrant that the operation of the System, Hardware, Software, or any related peripherals will be uninterrupted or error-free. Contractor is not responsible for damage arising from County's failure to follow instructions relating to the product's use. This Warranty does not apply to any Hardware or Software provided by third parties. This Warranty does not apply to any Hardware or Software provided by Contractor that is not used in conjunction with the System and for its intended purpose. This Warranty does not apply to monitors or televisions manufactured by third parties. Recovery and reinstallation of Hardware and user data (including passwords) are not covered under this Warranty. This Warranty does not apply: (a) to consumable parts, such as batteries, unless damage has occurred due to a defect in materials or workmanship; (b) to cosmetic damage, including but not limited to scratches, dents and broken plastic on ports; (c) to damage caused by use with non-Contractor products; (d) to damage caused by accident, abuse, misuse, flood, lightning, fire, earthquake or other external causes; (e) to damage caused by operating the product outside the permitted or intended uses described by Contractor; (f) to damage or failure caused by installation or service (including upgrades and expansions) performed by anyone who is not a representative of Contractor or a Contractor authorized installer or service provider; (g) to a product or part that has been modified to alter functionality or capability without the written permission of Contractor; or (h) if any serial number has been removed or defaced. TO THE EXTENT PERMITTED BY LAW, THIS WARRANTY AND REMEDIES SET FORTH ABOVE ARE EXCLUSIVE AND IN LIEU OF ALL OTHER WARRANTIES, REMEDIES AND CONDITIONS, WHETHER ORAL OR WRITTEN, STATUTORY, EXPRESS OR IMPLIED. **AS PERMITTED BY APPLICABLE LAW, CONTRACTOR SPECIFICALLY DISCLAIMS ANY AND ALL STATUTORY OR IMPLIED WARRANTIES, INCLUDING, WITHOUT LIMITATION, WARRANTIES OF MERCHANTABILITY, FITNESS FOR A PARTICULAR PURPOSE AND WARRANTIES AGAINST HIDDEN OR LATENT DEFECTS.** If Contractor cannot lawfully disclaim statutory or implied warranties then to the extent permitted by law, all such warranties shall be limited in duration to the duration of this express Warranty and to repair or replacement service as determined by Contractor in its sole discretion. No reseller, agent, or employee is authorized to make any modification, extension, or addition to this Warranty. If any term is held to be illegal or unenforceable, the legality or

enforceability of the remaining terms shall not be affected or impaired. EXCEPT AS PROVIDED IN THIS WARRANTY AND TO THE EXTENT PERMITTED BY LAW, CONTRACTOR IS NOT RESPONSIBLE FOR, SPECIAL, INCIDENTAL OR CONSEQUENTIAL DAMAGES RESULTING FROM ANY BREACH OF WARRANTY OR CONDITION, OR UNDER ANY OTHER LEGAL THEORY, INCLUDING BUT NOT LIMITED TO LOSS OF USE; LOSS OF REVENUE; LOSS OF THE USE OF MONEY; LOSS OF ANTICIPATED SAVINGS; LOSS OF GOODWILL; LOSS OF REPUTATION; and LOSS OF, DAMAGE TO OR CORRUPTION OF DATA. CONTRACTOR IS NOT RESPONSIBLE FOR ANY INDIRECT LOSS OR DAMAGE HOWSOEVER CAUSED INCLUDING THE REPLACEMENT OF ANY EQUIPMENT OR PROPERTY THAT IS NOT PART OF THE SYSTEM, ANY COSTS OF RECOVERING PROGRAMMING OR REPRODUCING ANY PROGRAM OR DATA STORED OR USED WITH CONTRACTOR PRODUCTS AND NOT PROVIDED BY CONTRACTOR, AND ANY FAILURE TO MAINTAIN THE CONFIDENTIALITY OF DATA STORED ON THE PRODUCT. Contractor disclaims any representation that it will be able to repair any Hardware under this Warranty or make a product exchange without risk to or loss of the programs or data stored thereon.

Article 46.1. Post Warranty Support and Maintenance

A) Service Options. Upon expiration of the Warranty Period, County shall have five options (each a "Service Option") to purchase certain post warranty support and maintenance services ("Post Warranty Services") for consecutive one-year terms (each a "Service Option Term"). County may exercise its Service Options by: (a) providing written notice to Contractor of its intent to exercise the Service Option prior to the beginning of each Service Option Term; or (b) making payment of the "Annual Fee" (as defined below). If County elects to exercise its initial Service Option, the initial Service Option Term shall begin on the day after the last day of the Warranty Period ("Commencement Date") and shall continue for one year. Unless this Agreement is previously terminated, County may exercise its remaining Service Options in the manner described above to renew this Agreement at each anniversary of the Commencement Date during the Term of this Agreement. Contractor shall have no obligation to provide the Post Warranty Services unless and until County validly exercises its Service Option and pays the Annual Fee.

B) Scope of Post Warranty Services. Subject to timely payment of the Annual Fee, during each Service Option Term, Contractor agrees to provide Hardware repair or replacement, support services, and Software updates and maintenance for the System (collectively the "Post Warranty Services") pursuant to the terms of the Warranty and this Article. Any other terms of the Agreement that are in conflict with the express terms of this Article shall be superseded by the terms of this Article during any Service Option Term.

C) Limitations. The Post Warranty Services specifically and expressly exclude disassembly or re-installation of any Hardware at County's site and repair of any Hardware that is determined to be obsolete or irreparable in Contractor's sole discretion. In such event, the irreparable Hardware shall be replaced with a functional equivalent. Notwithstanding the requirements of Article 24, Event of Default and Article 25, Notice of Default – Opportunity to Cure of the Agreement, Contractor shall not be liable to provide Post Warranty Services at any time when County is in breach of any obligation to Contractor under this Agreement.

D) Failure to Exercise Service Option. If the County fails to timely exercise any Service Option, Contractor may, treat such event as an Event of Default under Article 24 and deliver a Notice of Default to County pursuant to Article 25. If after receipt of notice the County fails to exercise its option within the Cure Period, the Contractor may terminate

this Agreement. In such event, County shall compensate Contractor for any Services provided after the expiration of the Warranty Period or Service Option Term, as the case may be, and the Effective Termination Date.

E) Annual Fees. On or before the Commencement Date and each anniversary thereof during the Term of this Agreement (each a "Due Date"), County shall pay an annual fee in advance for the Services to be delivered hereunder ("Annual Fee"). The Annual Fee shall be calculated as follows: (i) the product of the total cumulative price of all Hardware, Software, and Services provided to County (excluding items purchased as "non-Contractor" equipment) at any time under any circumstances ("Base Amount"), multiplied by 0.08, plus (ii) the annual cost of "Errors and Omissions Insurance" as set forth in the Quote, if such insurance coverage is required by the County at the time. County acknowledges and agrees that the Base Amount is cumulative and will increase by the purchase price of all Software, Hardware and Services purchased in the future. The Base Amount will be reduced by the original purchase price of any System components removed from service prior to each calculation of the Base Amount. Subject to Article 9, Contractor shall calculate the Base Amount, determine the Annual Fee and invoice County 60 days prior to the subject Due Date. County will pay the Annual Fee on or before the Due Date or 45 days after the date of an approved invoice, whichever is later.

Article 47. CLAIMS AND DISPUTES

All actions, claims and disputes arising out of, under, or related to, this Agreement, or for a breach thereof, shall only be commenced in a court of competent jurisdiction in Miami, Miami-Dade County, Florida and the Contractor hereby consents and submits to the jurisdiction of such court.

47.1 As an express condition precedent to the Contractor's right to commence a court proceeding, as set forth in Article 14.

IN WITNESS WHEREOF, the parties have executed this Agreement effective as of the Contract Date herein above set forth.

Contractor	Miami-Dade County
By:	By:
Name: Dominic Magnan	Name: Carlos A. Gimenez
Title: VP	Title: Mayor
Date: 12 MAR 2014	Date:
Attest: Corporate Secretary/Notary Public	Attest: Clerk of the Board
Corporate Seal/Notary Seal	Approved as to form and legal sufficiency
MARIBETH KASCHT NOTARY PUBLIC - ARIZONA MARICOPA COUNTY My Comm. Exp.: January 13, 2015	Assistant County Attorney
US Digital Designs, Inc. CORPORATE SEAL 2000 ARIZONA	

Appendix A—Scope of Services

Except where listed as optional, all features are included within the Scope of Work.

CAD Interface
The Selected Proposer shall be responsible for fully cooperating with Motorola CAD to implement a bidirectional CAD Interface that includes, but is not limited to unit status, incident information, moveup's, acknowledgements, non-emergency messages, System status messages and sending of test alerts / messages. The County acknowledges that there may be limitations of the CAD that beyond the Proposer's control.

US Digital Designs proposed to Motorola to have Motorola interface the MDFR CAD system to the Phoenix G2 system using the USDD standard XML interface. However, Motorola has responded that because the MDFR CAD system is considered by Motorola to be end of life that they would only provide the Motorola standard FSA Interface. Motorola has also declined to provide details on this interface prior to a contract and because of this, US Digital Designs is unable to provide information on the ability of this interface to meet the stated requirements. The Phoenix G2 Station Alerting System is capable of providing all of the stated functions if they are available through the CAD interface, and directly through the USDD Manual Alerting Client and Station Control interface.

System Features

Feature 1
The System shall have features such as escalating audio and subdued lighting at night. Vendors shall highlight their features that limit a startling effect.

The Phoenix G2 Alerting System uses user-selectable alerting tones that rise from off to full volume over varying amounts of time. Although some users do not want rising-level tones, most built-in alert tones rise from off to full volume in more than 2 seconds to minimize startle response.

The system can also optionally use LED Speaker Lights with ramping lighting levels to provide exit path lighting in dorm rooms, hallways and other station area. The Speaker Lights' LEDs ramp from off to full brightness over 10 seconds, reducing the impact of the lighting change in dark rooms.

Feature 2
The System shall be compliant to the 2013 edition of National Fire Protection Association (NFPA) Standard 1221 regarding installation, operation, maintenance, and use of emergency services communications systems.

Feature 3
The Phoenix G2 Station Alerting System shale be able to handle over 250 individual Fire Stations.

Feature 4
The System shall provide a means of notifying dispatchers that all components are properly operating; self-diagnosis, system health-check (as per NFPA 1221).

The Phoenix G2 Alerting System monitors the individual Station Controller and their components, power supplies and peripheral devices and can dynamically report failures. The Communications Gateway's web-based application provides personnel with audible and visual

alarms of system failures and can communicate alarms through SNMP, or SMTP email.

Feature 5
A manual alerting application shall be provided for dispatcher use to alert stations and units and groups in the event the CAD system is not available.

The Phoenix G2 Station Alerting System provides a Manual Alerting function as part of the web-based application on the Communications Gateway. The Manual Alerting Application has 3 different sections allowing Telecommunicators to send Dispatch, Administrative and Pre-defined alerts from the system. The application is usually configured as part of the system Dashboard which also displays Active Alerts and System Alarms. This means that the Dashboard can be the single display for all dispatch-related information and control.

Feature 6
The System shall include a portable system that can be used in a temporary fire station or shelter.

US Digital Designs has included a transportable ATX Station Controller, UPS, 12 Volt Radio Power Supply and Radio Mounting Panel in this proposal. Additional optional devices such as Speaker Lights, Message Displays and Controllers and other Peripherals can be added to the transportable unit by the County during the system detailed design process.

Feature 7
The System shall be capable of alerting by group, station, unit, etc.

The Phoenix G2 system can be alerted by group, station, unit or unit and can translate identifiers received from the CAD system and can expand one identifier into one or more additional identifiers if necessary.

Feature 8
Station Alerts in the System will not take longer than 1 seconds to initiate after the receipt of the alert notification from the CAD system. Time taken to alert the Station Controller over the Customer's network depends on the Customer's network performance and cannot be guaranteed by US Digital Designs.

Feature 9
The Phoenix G2 system uses the Communications Gateways as the central server core. Each Gateway system is a redundant hot-standby pair of servers with redundant RAID 1 disk drives. The database used in the system is replicated between the 2 servers in the pair.

Two sets of Gateways will be used for this system, one at the primary dispatch center, and the other at the backup dispatch center. Each set is capable of full system operation, and the database used in the system is replicated from the Primary set to the Secondary set to keep system configuration in synchronization. Each Communications gateway will include multiple NIC's, dual power supplies and hot swappable drives.

Feature 10
All two-way alerting circuits shall be monitored for integrity using periodic handshakes and the success or failure of these handshakes is logged on the Communications Gateway. If the number of failed handshakes exceeds the configured threshold an event is triggered on the Gateway to display a warning message and cause an audible alarm on the Station Monitoring and Control web application page. The Gateway can also be configured to notify email addresses of failure and recovery of each station's monitored circuits.

The Fire Station Controller also logs loss of handshakes and can trigger IO Rule actions when

the station has failed to receive handshakes for 3 cycles. These IO Rules can be configured to, for example, turn on dispatch radio monitoring, play an alert tone and display message sign text, or close a relay output.

Feature 11
The Station Controllers will each include two NIC's for multiple WAN connections. WAN connections will operate independent from each other with one handling the traffic automatically should the other fail.

Feature 12
The ATX Station Controller has standard ramping tones incorporated into the system. These tones are triggered by the receipt of an alert and the tone to play is contained in the alert message, allowing the CAD system to control the tone through the Communications Gateway. Tones are commonly selected based on the incident nature, but can also be based on the units alerted or other CAD data.

The ATX Station Controller and Message and Room Remotes can power and control LED Speaker Lights with ramping LEDs. These devices are all fully zonable for assignment to one or more units for zoned alerting.

The ATX also has 4 low-voltage relays which can be activated during an alert to control existing overhead lighting through a lighting contactor or relay.

Feature 13
The ATX Station Controller has 4 internal relays, and additional relays can be added to the system in groups of 8 using IO Remotes. Additional Relays are also provided inside Message and Room Remotes (2 per device).

The ATX firmware includes a sophisticated but simple to configure IO Rule function to control these relay through various triggers including: any station alert, specific unit alert, time of day, closure of an auxiliary input and loss of communications link. Relays can be held closed as long as the trigger is active, until another trigger clears it, or for a specified period of time (pulse). Relays can also be configured for operation from the Dispatch Center through the Station Status and Control page for, as an example, controlling bay doors or parking area gates.

Feature 14
The ATX Station Controller will support printing of incident dispatch information on standard PCL or PostScript printers, including those presently in use by the County. The printer text formatting is set by the Communications Gateway. The ATX supports multiple printers, and printers can be zoned by Station Area allowing printers to be assigned to one or more units in the station. Printouts can be made as one per station or one per alerted unit to give each unit a printout. Printers are monitored for connections and can be reported as up or down.

Feature 15
The Phoenix G2 ATX Station Controller fully supports station zoning through its internal audio amplifiers and LED Speaker Light outputs, LED colored light indicators and Message Signs. Common areas are typically set to alert for all alerts and sleeping areas can be configured with fixed unit-associated zones, or equipped with Room Remotes to allow unit associations to be selected per room. Room Remotes are an option, can have 1 or more units assigned for selection and fire fighters can select which units they wish to have trigger alerts for that room. This selection is reset at the Day time set in the controller to prevent inadvertent loss of alerting after shift change.

Feature 16
The ATX Station Controller has a Speakers ON / Speakers Auto function to allow radio

monitoring during the day (or when desired) and alert-only activation during night time. If necessary this feature can be overridden when desired on a station-by-station basis using the Station Status and Control web application in the dispatch center to force monitoring during critical times. The On/Auto monitoring can also be automatically controlled by time of day or through other triggers using the station's IO Rules configuration.

Feature 17
The Phoenix G2 Station Alerting System can process the alert information received from the CAD system in less than 500 ms after receipt from CAD. The Phoenix G2 Station Alerting System is designed and implemented in large multi-jurisdictional metropolitan fire department systems, including one serving 25 jurisdictions that handles more than 420,000 alerts per year with bursts of over 200 incidents per hour.

Feature 18
The System shall provide an audible alert over the speaker system of the station. This alert shall be escalating to increase the volume from low to high over a specified amount of time.

The ATX Station Controller has numerous fixed and ramping alert tones that customers can select from, or additional tones can be added by USDD to meet individual customer requirements. Alert tones can be fixed or selected based on incident nature or other CAD data to meet operational requirements.

Feature 19
The System shall include its own audio amplifiers with full remote volume control capability on a per speaker and/or zone basis.

The ATX Station Controller has 4 internal audio amplifiers that are remotely configurable for volume adjustment, and each Room Remote installed in the Dorm Rooms has a remotely controllable volume control with optional local volume and monitoring override. Individual speakers are not remotely controllable (unless only a single speaker is connected to an amplifier).

Feature 20
The ATX Station Controller has 5 audio outputs and each individual output is zone controllable. These outputs can be connected to existing 8 ohm or 70 volt speakers or with an additional level-adjusting unit, to line-level speakers. US Digital Designs is providing line-level adjusting units for each built-in zone as necessary.

Additional zones can be added by using relay switching through an IO Remote or by adding Message Remotes or Room Remotes. The ATX Station Controller will be capable of providing the necessary zoning as advertised in the RFP per station.

Feature 21
The ATX Station Controller has 3 customer analog audio connections for connection to dispatch radios, station intercom paging or other audio sources. 1 input is pre-configured for paging, but can be reconfigured if necessary.

The Station Controller also has a ring-detection input that can bridge an analog telephone line and play a ringing tone when this is detected.

Doorbells are accommodated using the IO Rules using Auxiliary Inputs to cause tones to play and message sign text to display allowing distinction between, for example, front door and rear door doorbells.

Feature 22
The 3 ATX Station Controller audio inputs include configurable prioritization and muting options that can have different behavior both during alerts and not during alerts to provide muting of inputs based on priority and function. Also, the inputs can be associated with 1 or 2 audio zones to allow inputs to be split among functional areas in the station to, for example, confine intercom paging to only certain areas of a station.

Feature 23
The System shall include a radio interface for redundant (back-up / two-tone) station alerting. Each dispatched run shall have the capability to be broadcast over both the in-station alerting network and/or over the dispatch radio channel (on a per dispatch channel basis).

The ATX Station Controller has a built-in Two-tone and DTMF tone decoder that can decode alerting tones from a connected voice radio. This can be used as a secondary (or backup) alerting path and can be continuously available, or only enabled only when the primary alerting path is unavailable.

The system includes the optional IP-based GaSI's to accommodate all positions in each communications center.

Feature 24
For purposes of secondary monitoring, the System shall be able to broadcast using the dispatcher console, via either radio system (Motorola and Harris consoles), active dispatches, grouped by one or more channels. This shall be independent and in addition to any dispatches on operational channels or in-station alerting.

The Phoenix G2 Communications Gateway can be configured to use any of the Gateway Audio Interfaces to transmit incident dispatch announcements based on CAD data to selected radio channels, either conventional or trunked. USDD will add functionality for MDFR to the system to allow operators to select the types of incidents to be transmitted on individual channels to allow MDFR to select incident announcements by area or groups of areas (including all areas). Final design of this feature will be developed during the Detailed Design process.

US Digital Designs will create configuration features in the Communications Gateway to allow static assignment of VoiceAlert announcements for one or more Dispatch Areas to one or more single Dispatch Channels. This assignment will map the Channel(s) to the Radio Console and audio hardware for the channel.

Feature 25
The dispatcher console radio interface shall be equipped to detect channel traffic and wait until the channel is free to begin automated voice dispatching.

The Gateway Audio Interface includes inputs that can be fed from a radio or radio system channel or talkgroup busy indication to cause the system to wait until the channel is free before transmitting. Channel busy information can be obtained through a Radio Console Interface for Motorola MCC7500 and Harris C3 Maestro Gateway radio consoles or directly from compatible radios that provide COR or radio receive indications. Timers are also included in the system to accommodate back-and-forth communications timing before transmitting to avoid stepping in the middle of communications.

Feature 26
The System shall provide an audible escalating alert tone that clearly identifies the units and the type of call that is being dispatched. The alert tone shall immediately precede the dispatch announcement (per NFPA 1221). The System must support the use of customized tones so that different tones can be used to indicate the type of call during the alert notification.

The System will be configured to play an escalating alert tone that indicates the type of call that is being dispatched (per Addendum clarification). Alert tones are assigned to the Incident Nature information received from the CAD system. The alert tone immediately precedes the VoiceAlert or manual dispatch announcement and the County can select from an existing set of alert tones or additional tones can be added to meet MDFR requirements.

Feature 27
The System shall have the capability, for any incident, to create voice dispatch alerts that announce simultaneously in multiple stations

The Phoenix G2 Station Alerting System fully supports alerting multiple stations simultaneously and playing VoiceAlert automated announcements in the alerted stations and over the dispatch radio channel or talkgroup. If multiple alerts come in to the Communications Gateway for multiple dispatches, the stations are alerted immediately and VoiceAlert plays in the stations, and radio voice announcements queue for the radio channel as necessary.

VoiceAlert announcements can also be reformatted based on incident type to, for example, place the units on the end of a structure fire dispatch to more quickly alert the dispatched stations to the location and nature of the incident. For example the normal VoiceAlert format might be "UNITS respond to a NATURE at LOCATION" and this might be rearranged to "NATURE at LOCATION for UNITS" to move the long list of units to the end of the dispatch. All of these formats are configurable by USDD for local operational requirements.

Feature 28
The Phoenix G2 Alerting System allows the dispatcher to start, pause, or stop VoiceAlert announcements on a per-channel basis to allow manual dispatch announcements without automated dispatching over the radio channel. Pausing the VoiceAlert stops the radio channel announcements while allowing new announcements to queue for later playback and stopping the announcements stops all announcements, clears the queue of waiting announcements and prevents new announcements from begin added to the queue.

US Digital Designs will make a connection from an analog line-level output from the Station Radio to the ATX Station Controller Audio Input #1 as shown on the Station Equipment Block Diagram. The cabling from the Station Radio to the ATX Station Controller can be installed by MDFR or by US Digital Designs under as described in the updated Pricing section of the RFP Response. While an alert is active, or when the speaker control function is in the Speakers ON mode (either locally or remotely set through the Communications Gateway), Station Radio audio will be connected to the station speakers.

Feature 29
The System shall be configured such that at any time, any combination can be used for dispatcher alerting (a dispatcher is announcing the incident information over the radio) and automated voice (the System is announcing the incident information over the radio.

These consoles may be any combination of Motorola MCC7500's and Harris Maestro IP's.

NOTE: Dispatchers will be able to choose if they will use text to speech independent of the other consoles.

Tablet UI will allow per-position enable / disable of speech for all incidents assigned to that Dispatch Channel. This allows the dispatcher to "take over" the announcements completely to do voice announcement in the station and over the radio. This is used particularly for dive rescues which frequently come in as general incident natures and are only indicated as dive rescues in the notes (a PD call for a car accident turns out to be a car into the canal). Dive

rescues also require significant communications between the dispatcher and the units to confirm diver availability and this preempts all other traffic on the channel.

The Communications Gateway will monitor connectivity to the Audio Control Box and indicate up/down to system. This will be displayed on the Tablet UI and will act as an alarm source on the Communications Gateway. US Digital Designs will investigate options for creating a "Master Alarm" function that will indicate that any major alarm is active and unacknowledged.

Units map to Stations (static) – this establishes the units permanently assigned to a station. If we do get a Move Up message, then we can dynamically update this to reflect moves, but it appears that we will not receive Move Up messages and the database will reflect permanent assignments only. Moves will be handled per-Alert message with the current station for a unit being included in the Alert message from CAD.

Stations map to Dispatch Area (static) – this establishes the units in an area that is controlled a particular Dispatcher. A dispatcher can have more than one Dispatch Area selected. and when one dispatcher is controlling more than one area, the dispatcher may select more than one radio channel. During Detailed Designs USDD will incorporate functionality to handle a console receiving alerts for more than one area / channel combination.

Dispatch Area maps to Dispatch Channel (static with override web UI for Supervisors) – this establishes what channel to use for dispatches for units assigned to or alerted for stations in this area. If a physical radio channel becomes unavailable due to failure, maintenance, etc., then this could be changed to direct all alerts for an Area to the newly assigned Channel. This assignment is permanent until changed (possibly indicated this is not normal with a color on the UI). This is one-to-one with the Area, so this can probably be an element of the Area and not a separate table.

Dispatch Channels map to Console Positions (dynamic with selection on tablet UI) – This maps which physical Console Position is configured to transmit dispatch traffic for the Dispatch Channel. Actual Dispatch Channel assignment in the radio console is done by the dispatcher outside the control of the Alerting System.

Console Positions map to Audio Output / Control Streams and (optional) MCC7500 Console API Interfaces (static) when the console requires MCC7500 control – This links the physical Console position to the Audio Control box and MCC7500 API Interface installed at the position. Audio Control boxes will be able to be associated with "consoles" that do not have MCC7500 consoles, such as for MDFR's current telephone monitoring function.

Interface to the Harris Consoles will not be part of the initial implementation, but is included in the scope.

USDD will provide a protected selector switch box to select between the current Zetron paging encoder and the new USDD Audio Control Box to allow selection of either source.

USDD will put the Audio Control and tablet UI devices on private network. The Communications Gateways will need multiple Ethernet ports and will provide 2 redundant switches located in separate racks approximately 30' apart.

As listed in the updated Pricing section of the RFP Response, USDD will provide a Tablet for each dispatch console position (18 at main, 13 at backup) to display the Communications Gateway Dashboard UI. If possible MDFR prefers wired connection for network and power for the Tablets. Also Tablet UI must have audible alarm capability. This functionality will depend on the capabilities of the Tablets selected.

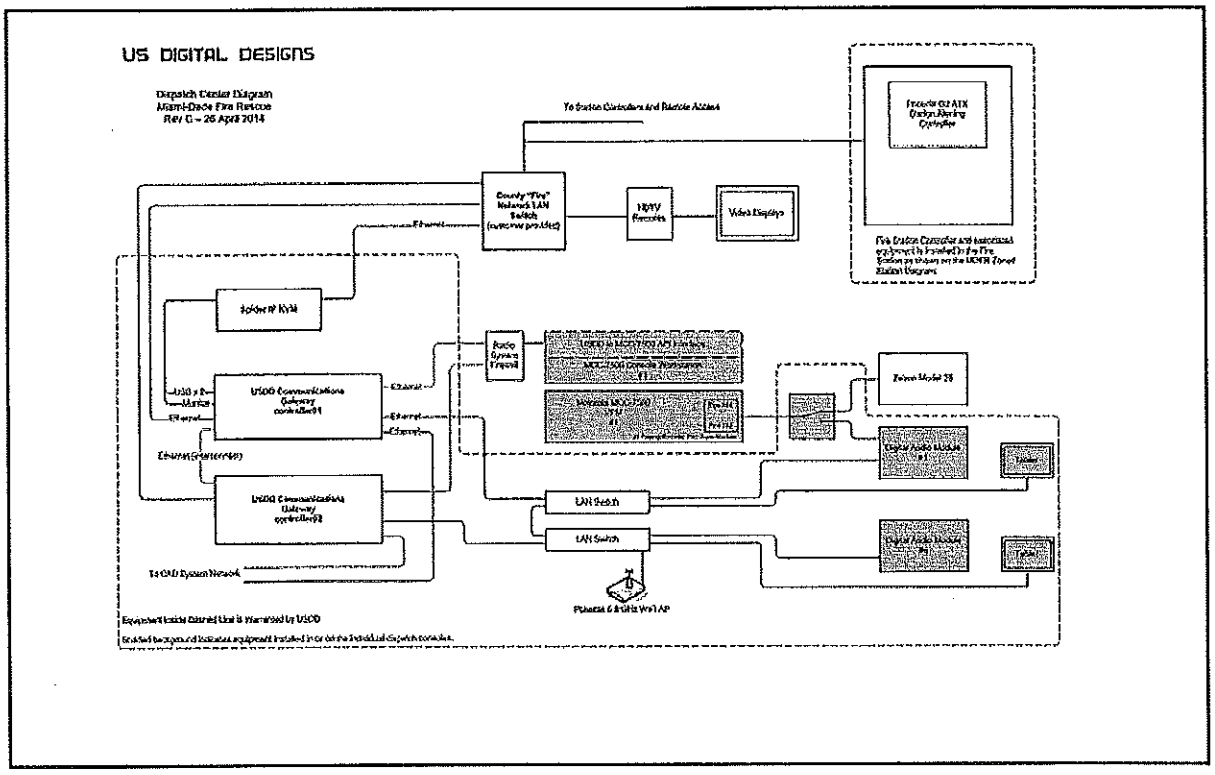

Feature 30

Automated voice announcements supported shall include: dispatch announcements, announcements of move-ups/station fill-ins, and non-emergency messages.

US Digital Designs plans to have Motorola use the USDD-standard XML Alerting API to give complete control of what events on the CAD system can cause alerts, and US Digital Designs will provide assistance in configuring the XML messages for each of these types of alerts so they format VoiceAlert announcements, message sign text, and printer output appropriately for each use case. Provided that Motorola can implement alerting messages for all of these events the system will be able to process all the listed alert types.

US Digital Designs will use a unique pseudo-unit, or will use another method provided by MDFR, to identify the Tactical Channel assigned to an incident and this will be used to determine the text used for VoiceAlert announcement and message sign text. If the assigned Tactical Channel matches the assigned Dispatch Channel, then the channel identifier will not be announced using VoiceAlert and will not be shown on the message display signs.

Feature 31
The USDD VoiceAlert system can announce all of these types of information provided the information is received from the Motorola CAD system. The system also has reformatting and substitution capabilities to, for example, modify nature codes from a displayable format to a speakable format ("CVA" to "Stroke" or "MVA" to "Traffic Collision").

Feature 32
All VoiceAlert announcements immediately follow the selected alert tone as per NFPA 1221.

Feature 33
The ATX Station Controller includes 4 Form C relay outputs built into the Station Controller unit. These outputs on are configurable through the IO Rules section of the ATX Station Controller configuration tool. Triggers include unit or station alerts, time of day, communication path and UPS events, and other station-level event triggers. The outputs can be configured for permanent or timed closure with or without a delay before closure.

In addition to the ATX outputs, IO Remote peripherals can be added to the system to add relay outputs in groups of 8 and each Message Remote and Room Remote have 2 relay outputs. Each IO Remote also adds 8 contact closure inputs to the system and Message Remotes and Room Remotes add 2 contact closure inputs. The contacts on the IO Remote are normally open only, but can be configured to act as normally closed contacts in most applications.

All station relays can optionally be controlled by telecommunicators from the Station Status and Monitoring web application on the Communications Gateway allowing dispatch control of these configured outputs. This can be used for station bay or parking gate controls to facilitate outside agency move ups, or other functions.

Feature 34
The ATX Station Controller has 3 internal DC contact closure inputs for monitoring devices, doorbells and other external functions. These inputs are configured using the IO Rules functions in the Station Controller and can trigger actions such as unit or station alerts, playing of audible tones such as doorbells along with message display, activating relay outputs, or clearing active alerts.

Additional DC inputs can be added to the system by adding peripheral devices to the system. IO Remotes have 8 inputs, and Message Remotes and Room Remotes have 2 inputs.

The state of all Station Controller inputs is also sent to the Communications Gateway and can be displayed as activity or alarm indications to the telecommunicators using the System Status and Monitoring functions of the Gateway.

Feature 35
The printer output format is configurable by USDD using any information provided by the CAD system in the XML alerting message. The printer output does not need be identical to the VoiceAlert announcement or message sign text and can include additional information if provided by the CAD system.

The system supports multiple printers per station and the printers can be configured to print 1 printout per alert, or 1 printout per alerted unit. Printers can be zoned so as to only print incidents for units assigned to the printer's zone to allow a battalion chief to have a printer that only prints their dispatches. The ATX Station Controller can accommodate most PostScript and PCL-compatible printers including the Epson FS 890N.

Feature 36
The Station Controller will simultaneously route and plays audio, displays visual text information and prints to connected printers when an alert is received.

Feature 37
The System shall include lighting capability that is designed to have little impact on the building occupant's night vision when a call is received. This will include red LED lights in the ceiling in the bunkroom area that are bright enough to light the area around the firefighters bunk area and provide a safe amount of light to make their way to the apparatus bay. Detail if additional LED colors are available and if they could be assigned to different units and/or incident types.

The Phoenix G2 Station Alerting System has the capability to power and control low voltage LED Speaker Lights. The USDD Speaker Lights have red LEDs that ramp from off to full brightness over 10 seconds to reduce startle response. The Speaker Lights have over 10,000 hour MTBF and require less than 30 ma per Speaker Light. Speaker Lights can be powered and controlled by the ATX Station Controller (4 Zones), Message Remote (1 Zone) or Room Remote (1 Zone). IO Remotes can also be used to control Speaker Lights in groups of 4 Zones per IO Remote.

US Digital Designs also provides the Color Indicator Remote (CI Remote) that provides multi-color indicators using an RGB LED matrix. The CI Remote can be configured through Station Rules to display colors for various system events including Station and Unit alerts, Doorbell and other input activations, and system status changes. CI Remotes are an option in the pricing section.

Feature 38
The Phoenix G2 Alerting System is centrally managed through the Communications Gateway and the system is secured by a username and password authentication system. User access is controlled through role permissions on a per-user basis to control access to individual functions in the system.

Feature 39
The Communications Gateway will poll each Station Controller every 30 seconds for reachability, and the Station Controller responds to each handshake with an acknowledgement and the status of all active components, its software version, and the state of a USB-connected UPS if present. The Station Controllers poll all connected Peripherals every 20 seconds, and will report failures to the Communications Gateway as they occur, and with each handshake response.

The Communications Gateway will display Station Controller and Peripheral failures, and component overcurrent failure indications to dispatchers using the Station Status and Control page. Components monitored include all POE connected devices and internal LED lighting outputs and audio amplifiers.

Feature 40
Station Controller failures trigger a visual and audible alarm and the audible alarm requires an acknowledgement to silence the alarm. Additional Station Controller failures will cause the audible alarm to reactivate. Peripheral and internal Station Controller failures trigger visual and audible alarms that also display on the Station Status and Control web application.

System administrators can also configure the Communications Gateway to send emails on failure or normalization triggers. Triggers include Station Controller up/down, Peripheral up/down, Communications Gateway restart or takeover and other events. Email addresses can be grouped into functional groups and the groups can be assigned to or removed from events for message delivery.

Feature 41
All communications between all devices in the system are logged. The Communications Gateway logs CAD communications and Station Controller Communications and the Station Controller logs communications with the Communications Gateways and the Peripherals and internal components. Peripherals are not complex enough to support logging.

Feature 42
The Communications Gateway and Station Controller have log viewing applications built into the web-based configuration applications on each platform. The Communications Gateway has two logs, the Alert log displays important events related to alert requests in chronological order

grouped by alert and the Debug Log logs all events on the Gateway in chronological order. The Station Controllers have a log that contains all station events in chronological order.

Feature 43
The Station Status and Control web application is accessible over SSL from a web browser that can access the system network, either remotely or at the station location.

Feature 44
US Digital Designs shall provide (per price schedule) HDTV Remotes configured for displaying the Active Alert and System Alarm displays on displays with available HDTV inputs. These displays will be custom formatted for MDFR to display the available system information in a format that best suits the telecommunicators needs and the displays' size and format.

Feature 45
The Communications Gateway uses Secure Socket Layer (SSL) to encrypt all communication between the Gateway and the user. A self-signed certificate is used for authentication of the Gateway to the user. In addition, SSH is used for all remote access support and uses Triple-DES encryption to secure sessions.

Feature 46
Motorola will send USDD XML API messages that are translated from internal Motorola format as necessary using the CSI (Common Services Interface).
Motorola will use the USDD Destination Status Message (DSM), sent to CAD after all alerting timeouts, and will use this message to generate an entry in the audit log for the associated incident. The DSM message will need the incident number in a field so Motorola can associate the DSM information with the associated incident. CAD is not able to provide a visual indication on CAD of alert success / failure other than the Audit Log entries.

Move-ups – MDFR uses the CAD Vehicle Coverage (VC) command which doesn't send Move Up messages out the CAD interface. If they used KC (Key Coverage) and the associated move up command in CAD, then Motorola could send a move up message. Miami-Dade does move ups by notifying the stations via telephone and don't need move up functionality. Motorola will send the station ID of all units in the Alert message sent to the Communications Gateways, and USDD will use this information to determine the Station to alert for each unit.

The Tone command in CAD would be used to generate administrative messages. The Tone command allows free text after the command that could be used as the message contents, possibly with a leading code to indicate to the Gateway the Alert Tone or other special handling of the message. The Tone command supports group messages. The CAD Tone command limits the length of the Message portion to something like 160-255 chars (Motorola was unsure of the exact limit).

Greater Alarms are tagged using the Modifying Circumstances field on the incident. This field is a two-letter code followed by a text description (seems to be delineated by space-dash-space following the code).

Special Calls – need to track incidents with units assigned and announce responding with other units or similar (actual speech TBD during detailed design). It would be best implemented using an Assigned Units field from CAD with all assigned units send on each dispatch Alert; this will mean that we won't have to track this and keep in sync with CAD. If this is not possible, the USDD will track all unit assignments in the database.

USDD will track unit status as received from the CAD system, and only alert units that are in "in quarters" statuses in the station. All dispatches will be done over the radio channel. If Moto can't send us a sync message with all statuses, then the system will be out of sync for a time until all units have changed status at least once. If Motorola has the ability to send a sync of all unit statuses on connection, the this will be easier. If there is no other reason for tracking unit status than In Quarters / Out of Quarters determination, then a better solution would be for CAD to indicate the status of the unit prior to dispatch; this would eliminate the sync issue.

Radio Channel announcement will be handled by assigning one of a group of special units to the incident. Each unit will indicate a specific Tactical Channel. If the incident is dispatched on the Tactical channel with the channel unit assigned, then don't announce the Tactical Channel. The actual method used to identify the assigned Tactical Channel will be determined jointly by MDFR and USDD based on the information available from the CAD system. Make the assigned channel sticky, and change it if another channel unit is assigned.
Motorola will provide information on method of monitoring the CAD to Communications Gateway link. Need note to Motorola that they will need to automatically restore the link on failure (assuming they make the connection – this needs to be confirmed in the documents to Motorola).

Team and Area fields in CAD indicated a Station / Unit assigned station. USDD will provide the ability for an incident type to be flagged for no speech over the radio channel (still announce in the station). Right now there is only one type that they are creating that will require no announcement over the radio. Probably add a check box for radio announce per type. MDFR and USDD will work jointly to determine a solution to this function based on the information available from the CAD system.

Feature 47
US Digital Designs will implement a printer output-based interface to the MDFR CAD System as part of the project using the existing Motorola CAD printer interface. This is a one-way interface and will only receive alerts for units that are currently assigned an in quarters status as actual status information on assigned units is not present in the printer output provided by the CAD System. There is currently a problem with consistent output from the rip-and-run interface on the CAD system and this must be rectified before this interface will be usable for alerting.

Feature 48
The Phoenix G2 system includes a Manual Alerting Client that allows dispatchers to alert stations, units or groups of stations or units with dispatch or administrative messages. The Dispatch alert tab of the client is formatted with destination, location and incident nature fields to allow speech and message sign text formatting.

The Administrative alert tab allows free-form text messages to be input into the system and the system will announce them in the stations. This is useful for storm notifications, daily morning announcements and other similar announcements.

The system administrator can also configure pre-defined alert messages (i.e., weather) that are pre-formatted administrative alerts. These can be configured for manual activation, or automatic activation by day-of-week and time-of-day. These are useful for daily system test announcements or wake-up announcements.

The Manual Alerting Client also has an Active Alerts display that shows the status of recent alerts and the status of any associated VoiceAlert announcements assigned to radio channels.

Feature 49
The Phoenix G2 Alerting System will alert by Station, Unit or Groups of Stations, Units or other Groups. The Alerting System receives alertable entities from the CAD System and then generates a list of output alerting entities based on the expansion of Groups into either Units or Stations. For example, a CAD alert request could include request that the entity "DIST1" be alerted. The Gateway will look up "DIST1" and if it is a Station or Unit, will alert the station and unit location for this entity. If "DIST1" is a group, the Gateway will expand the entities in the group into the Stations or Units in the group, and then alert those Stations or Units.

The Communications Gateway can also have Shadow Entities associated with alerting entities allowing a single entity generate additional entity alerts. For example, if a unit needs to get all alerts for another unit, the first unit can shadow the second and will be alerted any time an alert is received for the primary unit.

The Communications Gateway supports Aliases that can be mapped to other actual alerting entities to allow the CAD system to send different names than the names used by the alerting system. This can be used in cases where one station or units is to be alerted for more than one CAD system.

Feature 50
The Communications Gateway sends a Destination Status Message (DSM) to the CAD System in response to any alert message sent to the Gateway. The DSM contains a list of the successfully alerted entities sent from CAD (Stations, Units, or Groups) and the alert entities that were not successfully alerted. The CAD System can then prompt the telecommunicators to back up the alerted stations or units as necessary.

The status of all alerts is also available in real time on the Active Alerts display of the Communications Gateway's Dashboard application. This application displays each alert as it is processed by the system, along with the status of all alerted entities and associated VoiceAlert announcements. This display can be shown on the web application display using a web browser, and also on a dedicated display using the Dispatch Center version of the HDTV Remote.

Feature 51
The Communications Gateway processes and transmits alerts to Station Controllers within 500 ms of receiving incident alerting information from the CAD system, and alerts are typically completed within less than 1 second using a reliable, high-bandwidth alerting channel, such as a wired LAN/WAN. Actual alerting times depend on the usable alerting channel bandwidth, the necessity for retries on an unreliable channel and other factors outside USDD's control.

Feature 52
US Digital Designs will implement support for a second IP address on the Station Controller and the Communications Gateway for each station to provide support for a backup alerting path. USDD will also implement support for a second Ethernet port on the Station Controller if this is necessary for support for the selected commercial data modem selected by the County. If a second Ethernet port is necessary, USDD will also supply a USB-connected Ethernet port with each ATX Station Controller. If feasible, USDD will make this interface addition function with both wired and wireless secondary paths to allow the use of alternative wireline providers such as cable providers.

Feature 53
USDD will add an IO Remote Audio Panel (see diagram below) to the Station Controller to switch the line-level speakers between the existing MDFR alerting system output and the ATX

Station Controller output. When the ATX is alerted it will command the IO Remote to pull the audio to the ATX audio outputs, and when the alert is finished, return the outputs to the existing system. If the primary alerting path to the ATX (or the ATX itself) is not functional, the relays will have the audio path connected to the existing alerting system and this system will function as it does today.

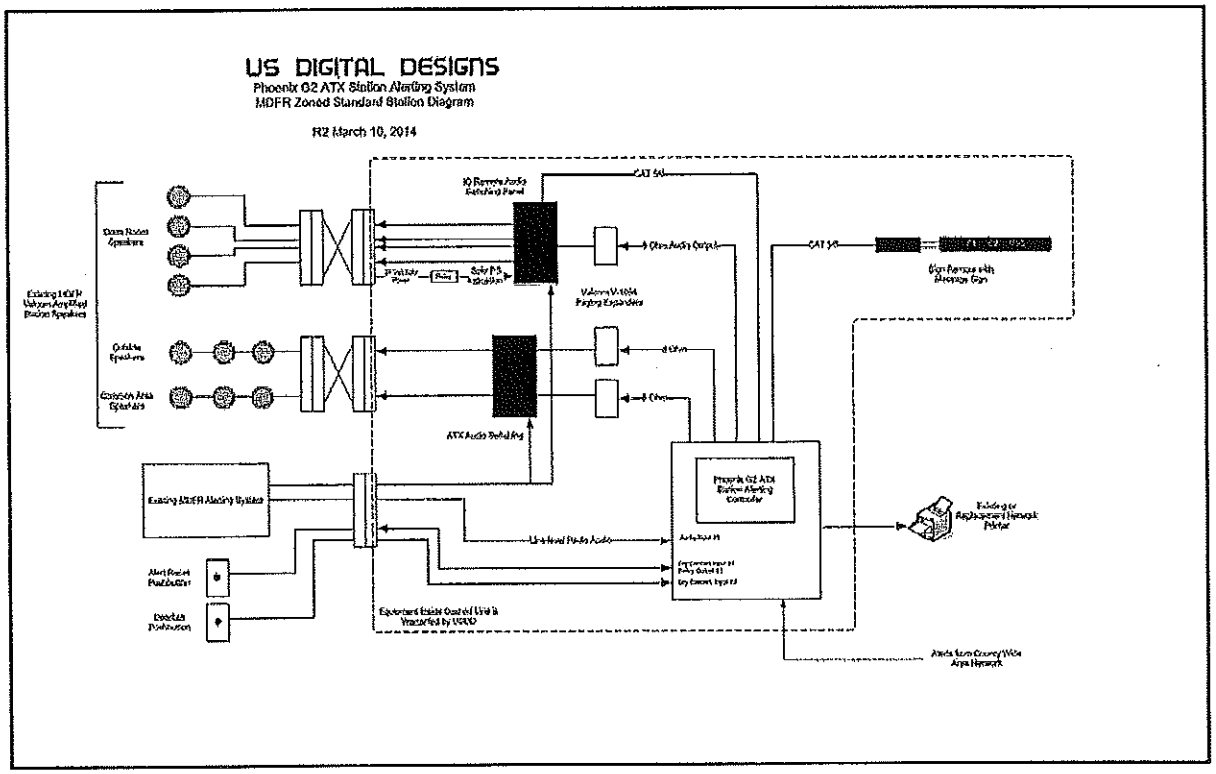

Feature 54

All network data communications paths can carry full alerting information, including VoiceAlert automated speech and message sign text and there will be no functional difference in the station when one of these methods is used to alert the station. If a commercial data network connection is used as the secondary alerting path, all functions of the system, including VoiceAlert announcements, message sign text, I/O control and reporting, activation of turnout timers, LED low-voltage lighting and relays will function as with a wired connection.

The two-tone or DTMF-based alerting is limited to alerting just the station or individual units in the station, but there is no other incident-related information carried by this path. Alerts received by two-tone, DTMF of contact closure are limited to playing an alerting tone, displaying fixed message sign text (such as BACKUP ALERT), activating turnout timers, LED low-voltage lighting and relay contacts and connecting through the dispatch radio audio.

Feature 55

The ATX Station Controller supports more than 200 zones in each station through the use of built-in amplifiers and the addition of Message Remotes, Room Remotes, and IO Remotes. The ATX Station Controller has 4 70 Volt audio outputs and 1 line-level audio output, each of which is independently zonable for a total of 5 built-in zones. Additional audio zones can be added by adding Message Remotes or Room Remotes, or by switching audio outputs using IO Remotes.

Each Message Remote has 2 audio amplifiers and can add 1 or 2 zones, and a Room Remote has 1 audio amplifier and adds 1 zone.

In the Station Controller individual Peripheral devices and audio amplifiers are associated with Station Areas (or zones). All devices in a Station Area are activated for an alert that involves that area (as defined per time of day).

Each Station Area is then associated with one or more units, and is activated whenever an associated unit is alerted. Unit to Station Area association is configured using the web configuration in the Station Controller.

If configured, the front panel touch screen can also be used to select the units associated with a Station Area to allow firefighters to select unit associations for example when necessary to change dorm rooms.

Room Remotes have an integrated message display that can be used to change the unit to Station Area associations in the individual room where the Room Remote is located. This configuration is typically used in dorm rooms where staff from different units share the room on different shifts and the dorm room is assigned as a Station Area.

Feature 56

When the Communications Gateway receives an alert request from the CAD system the Gateway parses the alert information received and creates two parallel alerting paths, one for the Station alerts and one for the Radio alerts. This process takes less than 500 ms after the receipt of the complete alerting message from the CAD system. The Station path immediately sends the alert to the involved Station Controllers and begins collecting acknowledgements. It will then retry any unacknowledged alerts with the necessary Station Controllers. If an alert is still unacknowledged after exhausting all retries, the Gateway will move to the next available communications path and attempt to alert the Station Controller using that path. The Station Controller immediately activates all visual alerting devices on the receipt of the alert, plays the alert tone and then the VoiceAlert announcement. In the event of multiple alerts for a single station, the visual alerts activate immediately as received, and the VoiceAlert announcements queue for playback and are played in receive order after the previous announcement completes.

Simultaneously with the Station Controller alerting sequence, the Communications Gateway sends the Radio alert to the responsible application, which either starts the transmission process immediately or, if the radio channel is not immediately available, queues the alert for transmission over the radio. When the channel becomes available, the alert announcement will be played in the order it is put in the queue. The Gateway has the ability to put Radio alerts into the radio queue based on incident priority if that is provided by the CAD system, allowing more urgent alerts to be transmitted before lower priority ones. An algorithm is used to ensure that higher priority alerts do not completely starve out lower priority dispatches by increasing the priority of lower priority alerts over time.

Feature 57

The Phoenix G2 VoiceEditor allows authorized personnel to edit the pronunciation of any word to be spoken by the system without USDD involvement. USDD will assist customers with adjustments that appear to be challenging. VoiceEditor also includes a feature to load a list of words or names that can be stepped through, played and marked for later adjustment speeding bulk changes if desired.

To make an editing change, the user enters a word to adjust and can have the system speak the word. The user can then modify the pronunciation of individual parts of the pronunciation,

add new phonemes to the pronunciation, split the word by syllables, and add emphasis to syllables. The system will speak the word after each pronunciation. The user can then save the modified word with the adjusted pronunciation and test the word with some sample text before moving to the next word.

Feature 58

Turnout timer is a functionality of message signs connected to Message and Sign remotes, and the message sign connected directly to the ATX Station Controller. In addition, turnout timer functionality is included in the display of the HDTV Remote when used in conjunction with an ATX Station Controller. The HDTV Remote turnout timer counts up in seconds and changes color from green to yellow to red as the time approaches the NFPA 1710 standard turnout time.

USDD has included Message Remotes and message signs in the proposal for FS02 in the Apparatus Bay configured as turnout timers at no additional cost to the County.

Feature 59

The Phoenix G2 Station Alerting System has the ability to use one or more HDTV Remotes connected to the Communications Gateway to display Active Alerts in real time with information indicating the Incident Type, Incident Location, Assigned Units (and the units' alert status) and the assigned Dispatch Channel and the state of the assigned dispatch channel voice announcement. This display can be formatted for vertical or horizontal displays and will be customized for the needs of MDFR using available alert information. The final design will be determined during the Detailed Design process.

HDTV Remote in non-Fire Station applications – System Status Monitor showing Recent Alerts and Radio Channel Status and Alarms for a list of Dispatch Areas (one or more) – like the Dashboard but without the Manual Alerting Client. We'll need a way to configure this in the Gateway web UI, and a way for installing new HDTV Remotes into the system on the County's network. USDD will implement a configuration page similar to the Peripherals page in the Station Controller for adding and configuring the HDTV Remotes as well as the IP GaSi and Tablets.

The following picture shows an example of the Active Alerts Display.

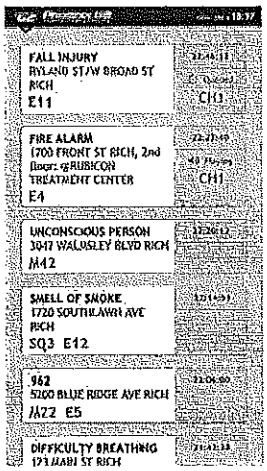

Feature 60
The ATX Station Controller monitors the connected Peripherals once every 20 seconds and continuously monitors power supply voltages and the current delivered to all peripheral devices such as Message and Sign Remotes, lighting power and built-in Audio Amplifiers. The Station Controller can also monitor USB-capable UPS units that use standard monitoring protocols. The state of all connected Auxiliary Inputs are sent to the Communications Gateways as are the status of all of the monitored internal components.

The Communications Gateway receives system status information for all monitored Peripherals, UPSs and Auxiliary Inputs. The Gateway also polls each Station Controller over each configured communications path to determine reachability via each path.

The Communications Gateway can display the status of each station, and can trigger audible and visual alarms on any Web application monitors displaying the System Status page. In addition, alarms can also be displayed on connected HDTV monitors in the dispatch center. System alarms can also cause SMTP email to be sent to one or more destinations reporting these alarms.

Feature 61
This scope assumes that the existing alerting system will be kept it its present form, and that the new alerting equipment will be integrated in, allowing the existing system to function in parallel with the new equipment. The only time the existing equipment will not be able to alert the station is during the actual integration of the new equipment, expected to be in the neighborhood of 2-3 hours. After this integration is complete and tested, the station will again be alertable by the existing system and, if the Communications Gateways are installed and CAD integration is complete, by the new system as well. This type of "soft cut-over" is the best way to ensure that the systems are operating properly during system implementation. US Digital Designs will work with County personnel to put together the exact implementation plan before any installation work is started, and will make adjustments with County personnel as necessary during the installation of the initial stations.

Feature 62
The Communications Gateway uses User-authenticated role-based authorization to allow authorization control and auditing of configuration and alerting use in the system. All Gateway access and use is logged as to the function accessed and the specific action or modification and the user that performed the action. Access to the log is also controlled by system authorization.

Feature 63
The Communications Gateways provide the central control and processing of alerts received from the CAD system and the Manual Alerting Client, and receives acknowledgements and other messages from the Station Controllers. The Communications Gateways at each dispatch center location are a hot-standby pair of servers running a hardened Linux operating system. Each Gateway has a pair of hard drives configured as RAID 1 for redundancy. The servers are 2RU servers with redundant power supplies.

Configuration and operating information is replicated from the Active controller to the Standby controller in real time, and the both controllers have an application that monitors the health of the combined system and can cause a restart of the running system, or a switchover to the redundant system if necessary. The System Administrator can also manually cause a switch from one Gateway server to another for maintenance purposes.

The two dispatch centers will be configured with identical pairs of Communications Gateways, and the main Gateway pair will replicate configuration information to the second pair at the

secondary dispatch center. Both sets of Communications Gateways are otherwise identical in functionality and can be used simultaneously. Each Communications Gateway will include – dual power supplies, removable spinning disks, 6 Ethernet ports, 2 LAN switches with dual power supplies.

Feature 64
Zoned Alerting – During the day, all alerts occur in all areas of the stations; During night, alerts occur in zones assigned by unit and common areas, with outside volume adjusted by time of day. MDFR will be able to override the Day/Night alerting configuration from the Gateway UI only (not locally in station) per station and for all stations to set Zoned alerting or Unzoned alerting. They call this Alpha Bravo for the A shift B shift that stays permanently at the station and rotates on 12 hour schedule, so some will be sleeping during the day and need zoned alerting.

Feature 65
The system includes SIP extension with ability to configure the extension not to answer, so its ringing is an event source for the IO Rules.

Feature 66
USDD will match the volume levels of the existing system during installation so a switch from the ATX to the backup alerting doesn't require a volume adjustment at each speaker.

Feature 67
USDD will distribute via email a weekly status reports with Overall Status, Risk, Schedule, Remedies, Completed Work in this period and accumulated. Come up with a standardized template for this. Conference calls weekly or as necessary for work progress. Sign-off sheet for Station installation (w/ ATP) and for Dispatch Center installation / Configuration (w/ ATP).
System ATP

Feature 68
US Digital Designs will provide a train-the-trainer to train dispatch personnel. This includes, on-site training for MDFR dispatch trainers and supervisors for up to 3 days and will provide written course materials for these classes, and electronic copies of the material for use by MDFR in customizing the training for their personnel. Additional on-site training can be optionally be added to the contract if necessary for additional cost.

Feature 69
US Digital Designs will conduct training on the administration of the Communications Gateway including adding additional stations, units, or groups; adding incident nature and unit type translations; and other configuration tasks.

Also included will be the use of the Statistics and Logs for troubleshooting tasks.
Training will also be conducted on configuring and monitoring the Station Controller including setting volume levels, adding or configuring peripheral devices, adding IO Rules, firmware updating, and the use of logs for troubleshooting.

US Digital Designs will also conduct training on the use of the VoiceEditor application to adjust street name and other VoiceAlert pronunciations.

Project Schedule

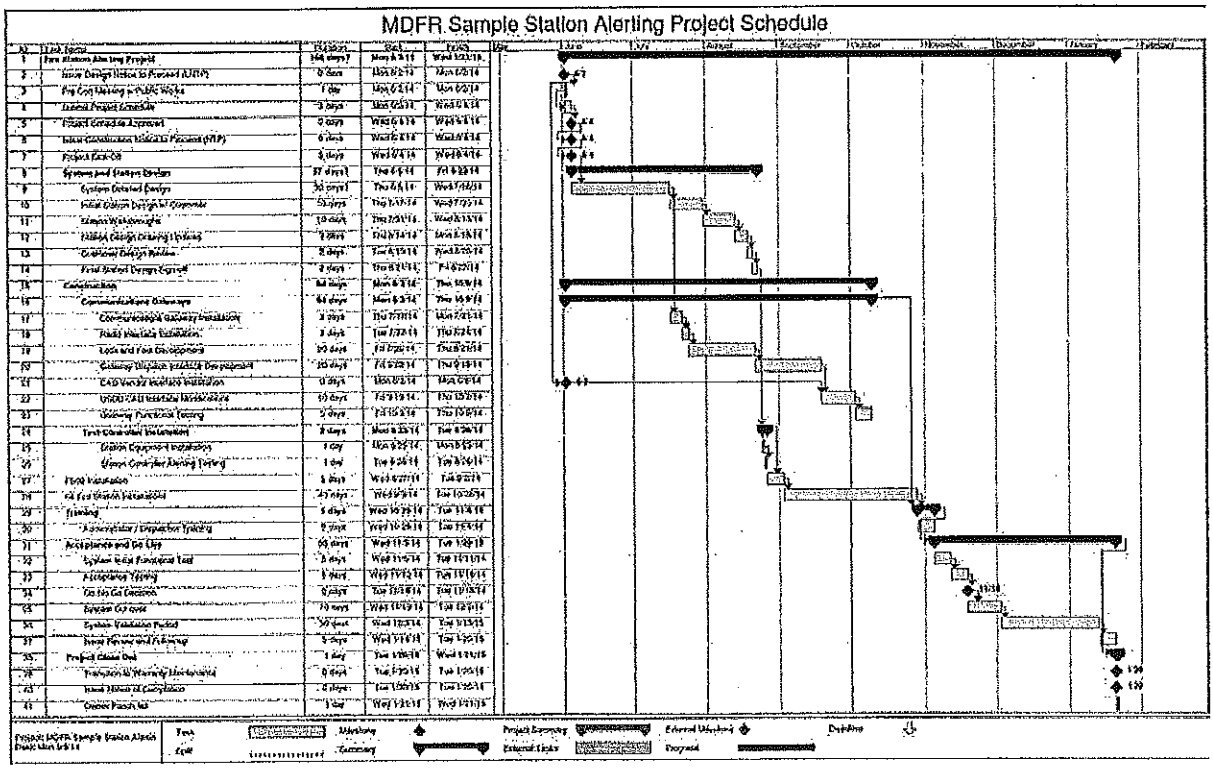

Appendix B—County Obligations

1. The County shall appoint a System Administrator and provide Contractor with written notice of such appointment and assignment promptly after the Contract Date. County may replace the System Administrator only upon written notice to Contractor. The System Administrator shall be the Contractor's primary point of contact for communications related to this Agreement and the System. The System Administrator may designate authorized personnel in writing to act on behalf of the System Administrator. The Contractor shall be authorized to accept direction from these designees. County will ensure that the System Administrator is reasonably available to Contractor, and Contractor may rely on the direction of the System Administrator in performing its duties hereunder, including without limit, direction to provide Additional Work.

2. County shall take and perform all reasonable action necessary to facilitate Contractor's performance of the Scope of Work hereunder. Without limiting the foregoing, County shall be responsible for the following:

a. The provision of VPN or other means for remote access to the System for installation, testing, and remote access support;

b. The procurement and/or provision of all non-System equipment, such as, computers, peripherals, and consumables (collectively "County Equipment"), including printer paper, toner and ink necessary for the installation, testing and functionality of the of the System;

c. For each "Communications Gateway" location, County shall:

i. Provide rack or cabinet space of at least 2 RU for the installation of each Communications Gateway server;

ii. Provide 2 15A/120V AC outlets for each Communications Gateway and switch within 10' of Communications Gateway installation location, preferably on a UPS/generator circuit;

iii. Provide 3 100/1000 BASET LAN ports for Communications Gateways, which must have connectivity to the County's CAD system interface server for the station alerting interfaces, and connectivity to the fire station networks for station alerting;

iv. Provide 3 CAT5 patch cables from LAN ports to Communications Gateway installation location;

v. Prior to shipment of any Product, assign 4 IP addresses on the network where the Communications Gateways will reside, and provide the addresses to Contractor, together with the subnet mask and default gateway address (two IP addresses are for physical Communications Gateways, one IP address is for the active Communications Gateway, and one IP address is for the Spider IF KVM); and

vi. Provide VPN access to the 4 IP addresses assigned to the Communications Gateways (access will be required for SSH (22), HTTP (80), and HTTPS (443));

d. Provide the voice radio system, data network infrastructure, CAD system and CAD interface (on the CAD system itself), dispatch computers with current version web browser, and personnel skilled in County's radio and data systems;

e. If County purchases the VoiceAlert Radio connections option, for the Communications Gateway to radio system connection, County shall:

i. Procure and install radio control station(s) or radio console(s), if necessary, and integrate with existing radio system, which must have PTT input, audio input, and COR output for full System functionality;

ii. Provide any third party console software licenses as necessary;

iii. Provide network access from Communications Gateways to radio consoles, if necessary;

iv. Provide 1 100/1000BASET LAN port for the Contractor GaSi Audio Interface, which must have connectivity to the Communications Gateways;

v. Provide 1 CAT5 patch cable from LAN port to Contractor GaSi Audio Interface installation location; and

vi. Provide 1 IP address, subnet mask and default gateway address for the GaSi Audio Interface;

f. At each ATX or ATU Station Controller installation site, County shall:

i. Provide mounting location for Station Controller;

ii. Provide 1 15A/120V AC outlet within 4' of the Station Controller location preferably on a Generator circuit;

iii. Provide 1 10/100 BASET LAN connection within 6' of the Station Controller from station LAN with 2-way TCP/IP and UDP/IP connectivity to Communications Gateway network (dispatch center or computer equipment location);

iv. Provide 1 IP address, subnet mask, and default gateway for each station location;

v. Provide VPN access to the IP addresses assigned to the Station Controllers, which must provide access for SSH (22), HTTP (80), and HTTPS (443);

vi. Provide connection to 70 volt speaker system if existing speaker system is to be used;

vii. Provide dispatch radio for audio source for dispatch alerting, if necessary; and

viii. Provide connections from telephone intercom, secondary dispatch radio, or other existing audio sources to the Station Controller, if necessary;

g. Any configuration and regular maintenance that is normally undertaken by the user or operator as described in any operating manuals for the County Equipment, including the replacement of UPS batteries as necessary;

h. Providing all reasonable security and bearing all risk of loss or damage to any Products delivered to, stored at, or installed on County property;

i. Providing a stable means of data transmission between the Communications Gateway and each Station Controller serviced by the System necessary for the installation, testing and functionality of the of the System; such means of data transmission may include, but is not limited to, TCP/IP, data modems, leased lines, radios, etc;

j. The correct use of the Products and System in accordance with the manufacturer and Contractor's operating instructions; and

k. The security, accessibility, and integrity of the System, County Equipment, and installation site.

Appendix C—Price Quote

See Attached.

US DIGITAL DESIGNS

Tempe, Arizona USA

Phoenix G2 - Automated Fire Station Alerting

Quotation to:

Miami-Dade County
Miami-Dade Fire Rescue

Project:

Fire Station Alerting System

2 Dispatch Centers / 65 Stations (with FS02 Upgraded)

Proposal number:

MDF010

Revision #

2

Final Quote for Final Contract
RFP No. 899

Quote Date:

05-May-2014

Quote Expires:
1-Nov-2014

FOR FINAL INSTALLATION CONTACT:
Doc Watts Electric, Inc
George Rivera (407) 243-2278

By:
Erik Hanson
Project Manager

US Digital Designs, Inc.
1835 E Sixth St #27
Tempe, AZ 85281
602-687-1739 direct
480-290-7892 fax
ehanson@usdd.com

This quote subject to review for errors and omissions

US DIGITAL DESIGNS

QUOTE

1835 E. Sixth St. Suite #27
Tempe, Arizona 85281
877-551-8733 tel *480-290-7892 fax*

DATE: 5/5/2014
Expires: 11/1/2014

Quote SUBMITTED TO:
Miami-Dade County
Fire Station Alerting System

REF PROPOSAL
MDF010 v2 **Dispatch-Level Equipment/Services**

PRIMARY DISPATCH CENTER

Item	Unit	Mfr	Qty	Description	Part No.	Unit	Ext	
				COMMUNICATIONS GATEWAY EQUIPMENT				
1	PR	USDD	1	**G2 Communications Gateway Pair** (MDFR Request for Dual Power Supply and Multiple Ethernet Ports)	**MD-G2-GW**	$ 7,500.00	$ 7,500.00	
2	Kit	USDD	18	**G2 Gateway Audio Serial Interface (GaSi)** / IP / 2-Channels (changes requested post-RFP)	**GaSi**	$ 1,695.00	$ 30,510.00	
3	Kit	USDD	6	**G2 HDTV Remote module**	**TVR**	$ 786.00	$ 4,716.00	
4	Kit	USDD	0	**G2 Light Tower Interface**	**LTI**	$ -	$ -	
				COMMUNICATIONS GATEWAY INTERFACES				
5	LOT	USDD	2	Radio System Interface	**RSI**	$ 9,250.00	$ 18,500.00	
6	LOT	USDD	1	Radio System Interface Modification	**RSI-CM**	$ 3,125.00	$ 3,125.00	
7	LOT	USDD	0	Additional Radio Channel	**ARC**	$ -	$ -	
8	LOT	CAD	1	CAD Interface - Motorola (USDD-side Only).	**CAD-I**	$ 8,200.00	$ 8,200.00	
				COMMUNICATIONS GATEWAY SERVICES				
9	HR	USDD	50	Gateway Configuration & Modifications	**GW-CM**	$ 250.00	$ 12,500.00	
10	LOT	USDD	1	Gateway Installation and Start-up	**GW-ISU**	$ 5,240.00	$ 5,240.00	
11	LOT	USDD	1	Gateway Project Management	**GW-PM**	$ 1,451.00	$ 1,451.00	
12	LOT	USDD	1	Training - System Administrator	**TRA-SA**	$ 2,150.00	$ 2,150.00	
13	LOT	USDD	1	Training - Dispatch Operator	**TRA-DO**	$ 2,150.00	$ 2,150.00	
14	LOT	USDD	1	G2 FSAS App (no charge when under warranty or support)	**G2-APP**	$ -	$ -	
15	LOT	USDD	0	Misc Option 1		$ -	$ -	

PRIMARY DISPATCH CENTER **$ 96,042.00**

BACKUP DISPATCH CENTER

Item	Unit	Mfr	Qty	Description	Part No.	Unit	Ext	
				COMMUNICATIONS GATEWAY EQUIPMENT				
1	PR	USDD	1	**G2 Communications Gateway Pair** (MDFR Request for Dual Power Supply and Multiple Ethernet Ports)	**MD-G2-GW**	$ 7,500.00	$ 7,500.00	
2	Kit	USDD	13	**G2 Gateway Audio Serial Interface (GaSi)** / IP / 2-Channels (changes requested post-RFP)	**GaSi**	$ 1,695.00	$ 22,035.00	
3	Kit	USDD	2	**G2 HDTV Remote module**	**TVR**	$ 786.00	$ 1,572.00	
4	Kit	USDD	0	**G2 Light Tower Interface**	**LTI**	$ -	$ -	
				COMMUNICATIONS GATEWAY INTERFACES				
5	LOT	USDD	2	Radio System Interface	**RSI**	$ 9,250.00	$ 18,500.00	
6	LOT	USDD	1	Radio System Interface Modification	**RSI-CM**	$ 3,125.00	$ 3,125.00	
7	LOT	USDD	0	Additional Radio Channel	**ARC**	$ -	$ -	
8	LOT	CAD	1	CAD Interface - Motorola (USDD-side Only).	**CAD-I**	$ 8,200.00	$ 8,200.00	
				COMMUNICATIONS GATEWAY SERVICES				
9	HR	USDD	50	Gateway Configuration & Modifications	**GW-CM**	$ 250.00	$ 12,500.00	
10	LOT	USDD	1	Gateway Installation and Start-up	**GW-ISU**	$ 5,240.00	$ 5,240.00	
11	LOT	USDD	1	Gateway Project Management	**GW-PM**	$ 1,219.00	$ 1,219.00	
12	LOT	USDD	1	Training - System Administrator	**TRA-SA**	$ 2,150.00	$ 2,150.00	
13	LOT	USDD	1	Training - Dispatch Operator	**TRA-DO**	$ 2,150.00	$ 2,150.00	
14	LOT	USDD	1	G2 FSAS App (no charge when under warranty or support)	**G2-APP**	$ -	$ -	
15	LOT	USDD	0	Misc Option 1		$ -	$ -	

BACKUP DISPATCH CENTER **$ 84,191.00**

REQUESTED ADDITIONS

Item	Unit	Mfr	Qty	Description	Part No.	Unit	Ext	
1	LOT	CAD	0	CAD Interface - Motorola (No quote submitted by Motorola). **Per Miami-Dade County in 04APR2014 Conference, the requirement for USDD to include this Motorola Cost in USDD pricing has been removed - MDFR to solicit this directly from Motorola now. -**	**CAD-Moto**	$ -	$ -	
	USDD Provision of Switches: Per Customer Request, to add redundancy							
2	Kit	USDD	31	**Selector Switch** for IP GaSi to switch Audio and PTT between IP GaSi & Zetron TBD Pending Customer Approval of Recommended Switch	**MD-SS**	$ 120.00	$ 3,720.00	
3	Kit	USDD	4	**Dual LAN Switches** for private network for IP GaSis, Tablets and HDTV Remotes	**MD-DLS**	$ 6,600.00	$ 26,400.00	
	Console Control App: User Interface for dispatcher status and control (radio channels, alarm display)							
4	Project	USDD	1	**Tablet U.I.:** Development and Delivery of Software/Application Solution	**MD-TUI**	$ 35,000.00	$ 35,000.00	
5	Per Position	USDD	31	**Tablet Hardware:** Tablet, Mounts, Adapters, etc.	**MD-THW**	$ 1,440.00	$ 44,640.00	
	Test System: Allows MDFR to conduct testing with staging CAD System.							
6	Project	USDD	1	**Test Gateway.:** Hardware and Configuration	**MD-TGW**	$ 4,400.00	$ 4,400.00	
7	Kit	USDD	1	**Test G2 ATX STATION CONTROLLER**	**ATX**	$ 18,000.00	$ 18,000.00	
8	Ea	USDD	1	**Test MESSAGE SIGN**, Digital LED **(BetaBrite)**	**MS-B**	$ 324.00	$ 324.00	
33	Ea	USDD	1	**Test G2 LED SPEAKER** - Surface Mount **(MB)**, 8Ω/70v	**SPK-LED-SM**	$ 270.00	$ 270.00	

REQUESTED ADDITIONS **$ 132,754.00**

ALL DISPATCH / Equipment and Services / Running Total:	**$312,987.00**
All DISPATCH / Shipping Total / Running Total:	$563.40
GRAND TOTAL / DISPATCH:	**$313,550.40**

The County has removed USDD's requirement to include Motorola's CAD Interface Costs.

US DIGITAL DESIGNS
1835 E. Sixth St. Suite #27
Tempe, Arizona 85281
877-551-8733 tel *480-290-7892 fax*

QUOTE

DATE: 5/5/2014
Expires: 11/1/2014

Quote SUBMITTED TO:
Miami-Dade County
Fire Station Alerting System

REF PROPOSAL
MDF010 v2

Station-Level Equipment/Services

INSTALLED Fire Station

INSTALLED - Basic/Core Fire Station Alerting System Design for all 65 Stations (with FS02 having no-cost upgrades detailed seperate)

Item	Unit	Mfr	Qty	Description	Part No.	Unit	Ext	
				PHOENIX G2 - STATION CONTROLLER (Required)				
				Control up to (8) peripherals				
1	Kit	USDD	1	**G2 ATX STATION CONTROLLER**	**ATX**	$ 18,000.00	$ 18,000.00	
2	Kit	USDD	0	Rack Mount Ears	ATX-E	N/C	N/C	
3	Kit	USDD	0	Base Plate	ATX-P	N/C	N/C	
				STATION CONTROLLER OPTIONS				
4	Kit	USDD	0	**ATX EXPANSION KIT**	**ATX-EXP**	$ -	$ -	
5	Kit	USDD	0	Rack Mount Ears	ATX-E	N/C	N/C	
6	Kit	USDD	0	Audio Extension Module	AUD-EXT	$ -	$ -	
7	Kit	USDD	0	Fiber LAN Modules (2)	FIB-LAN-KIT	$ -	$ -	
8	Ea	USDD	1	**G2 VOICEALERT** - (One Time) Single Station License	**VA**	$ 834.00	$ 834.00	
				PERIPHERAL OPTIONS				
9	Ea	USDD	0	**G2 ROOM REMOTE** Module	**RR**	$ -	$ -	
10	Ea	USDD	0	RR Trim Plate, for Flush-Mount	RR-TP	$ -	$ -	
11	Ea	USDD	0	RR Back-Box, for solid-wall flush-mounting	RR-BB	$ -	$ -	
12	Ea	USDD	1	**G2 MESSAGE REMOTE** Module (added by MDFR post-RFP, for App Bay)	**MR**	$ 1,050.00	$ 1,050.00	
13	Ea	USDD	1	**G2 SIGN REMOTE** Module	**SR**	$ 525.00	$ 525.00	
14	Ea	USDD	0	**G2 HDTV REMOTE** Module	**TVR**	$ -	$ -	
15	Ea	USDD	0	**G2 MESSAGE SIGN**, Digital LED **(GammaSign)**	**MS-G**	$ -	$ -	
15	Ea	USDD	3	**MESSAGE SIGN**, Digital LED **(BetaBrite)** (x2 added by MDFR post-RFP, for App Bay)	**MS-B**	$ 324.00	$ 972.00	
16	Ea	USDD	2	MS Adapter Plate, VESA 100 (added by MDFR post-RFP, for App Bay)	MS-ADPT-V100	$ 54.00	$ 108.00	
17	Ea	USDD	1	MS Tie-Straps (pair) - join two MSs (added by MDFR post-RFP, for App Bay)	MS-ADPT-STRP	$ 24.00	$ 24.00	
18	Ea	USDD	0	MS Mount - Articulating, Std. reach	MS-MNT-ART-S	$ -	$ -	
19	Ea	USDD	1	MS Mount - Articulating, Long reach (added by MDFR post-RFP, for App Bay)	MS-MNT-ART-L	$ 259.00	$ 259.00	
20	Ea	USDD	0	MS Mount - X2 Arm, Artic., Long	MS-MNT-ART-LX2	$ -	$ -	
21	Ea	USDD	0	**G2 DOUBLE MS KIT** (MR, 90-deg Mount, x2MS)	**MS-X2K**	$ -	$ -	
22	Ea	USDD	0	**G2 I/O REMOTE** w/ 8 In & 8 Out	**IOR**	$ -	$ -	
23	Ea	USDD	0	Turnout Timer, Count Up, 2.25"X	TOT	$ -	$ -	
24	Ea	USDD	0	Strobe Light / Red LED	STR	$ -	$ -	
25	Ea	USDD	0	**G2 Color Indicator Remote** - Up to 8 unique colors	**CIR**	$ -	$ -	
26	Ea	USDD	0	Push Button, Standard (Black)	PB-B	$ -	$ -	
27	Ea	USDD	0	Push Button, Emergency (Red)	PB-R	$ -	$ -	
28	Ea	Atlas	0	Audio Amplifier, External, Standard	AMP	$ -	$ -	
29	Ea	Bogn	0	Speaker-**APP**/Weatherized (**A2T**), Surface, 70v	SPK-W-SM	$ -	$ -	

30	Ea	Bogn	0	Speaker - Standard, Flush Mount, 8Ω/70v (S86)	SPK-STD-FM	$ -	$ -	
31	Ea	Bogn	0	Speaker - Surface Mount (MB), 8Ω/70v	SPK-STD-SM	$ -	$ -	
32	Ea	USDD	0	**G2 LED SPEAKER** - Flush Mount, 8Ω/70v	**SPK-LED-FM**	$ -	$ -	
33	Ea	USDD	0	**G2 LED SPEAKER** - Surface Mount (MB), 8Ω/70v	**SPK-LED-SM**	$ -	$ -	
34	Ea	TIC	0	Transformer, 8ohm to 70V, External	XFMR	$ -	$ -	
35	Ea	TBD	0	ATX UPS, Standard (listed seperately / Form B-1)	UPS-STD	$ -	$ -	
36	Ea	USDD	0	UPS Extended Runtime Battery	UPS-EXT	$ -	$ -	
37	Ea	VAL	1	70-Volt Adapter Solution to tie new FSAS Output into existing amplified speakers	MD-XFMR	$ 200.00	$ 200.00	
38	Ea	USDD	1	2-Channel Line-Level Audio Mixing Solution to tie into existing (OFE) Miami-Dade Audio System	MD-MXR	$ 150.00	$ 150.00	
39	Ea	USDD	1	I/O Remote Audio Switching Panel to integrate with existing (OFE) Valcom Paging	MD-RASP	$ 1,550.00	$ 1,550.00	

STATION-LEVEL SERVICES

40	Ea	USDD	1	**Station Installation**	**ST-INST**	$ 3,177.00	$ 3,177.00	
41	Ea	USDD	0	**Station Remediation**	**ST-INST**	$ -	$ -	
42	Ea	USDD	0	**Station Installation Supervision**	**ST-IS**	$ -	$ -	
43	Ea	USDD	1	**Station Configuration & Start-Up**	**ST-SU**	$ 710.00	$ 710.00	
44	Ea	USDD	1	**Station Project Management**	**ST-PM**	$ 592.00	$ 592.00	
45	Ea	USDD	1	**Station Engineering / Design Services**	**ST-ES**	$ 237.00	$ 237.00	
46	Ea	USDD	1	**Station Documentation**	**ST-DM**	$ 36.00	$ 36.00	
47	Ea	USDD	0	**Station Training - User/Technician** via streamed online video with per-station license and participant registration/verification.	**TRA-UT-VID**	$ -	$ -	
48	Ea	USDD	0	**Station Training - User/Technician. On-Site @ Station.** 1 Hour, 1 Visit. (3 Units/Hours suggested to cover 3 shifts)	**TRA-UT-OS**	$ -	$ -	
49	Ea	USDD	0	**Training - Installation Contractor / USDD G2 Certification** (TBD - only needed if using non-certified contractor)	**TRA-IC**	$ -	$ -	
50	Ea	USDD	1	**Radio Connection/Installation** NTE ALLOWANCE OF $750 - Final to be performed to stated MDFR Acceptable Standards into MDRF-Provided Type 66 blocks, at Hourly Rate Submitted in accordance to approved hourly technician labor rate ($105) Caveats: <100', Suspended Ceiling Only, No coring/drilling, anything beyond subject to pre-approved T&M.	**MD-RI**	$ 750.00	$ 750.00	

INSTALLED Fire Station	**Individual Station Equipment Subtotal**	$	29,174
	Individual Station Shipping	$	440
	INDIVIDUAL STATION GRAND TOTAL	$	**29,614**

Number of Stations of this type: 65

Stations 12, 25, 59 are included with 'Basic' System - newly requested upgrades for these stations are listed seperately in 'Options Section). FSs 64,70 and Demo Station are NOT included in above or below totals, as these were not part of the original RFP (are new-construction), and are now detailed in 'Options' Section. All of this is also detailed in the 'Installed' and 'No Install' Station Summary Lists.

All Connections to existing MDFR equipment (speakers, push buttons, etc.) will be through MDFR-Provided type 66 blocks using solid telecom wire. New message signs for App Bay to be installed on ATX-side of App Bay.

ALL INSTALLED STATIONS / System & Services / Running Total : $1,896,310.00

All Stations / Shipping / Running Total : $28,600.00

Grand Total / INSTALLED Station-Level Equipment : $1,924,910.00

US DIGITAL DESIGNS
1835 E. Sixth St. Suite #27
Tempe, Arizona 85281
877-551-8733 tel *480-290-7892 fax*

QUOTE

DATE: 5/5/2014
Expires: 11/1/2014

Quote SUBMITTED TO:
Miami-Dade County
Fire Station Alerting System

REF PROPOSAL
MDF010 v2 **Station-Level Equipment/Services**

Fire Station 02 Upgrades (from 'Basic' proposed)

Enhanced FSAS Design Upgrades /Provided at 'No Cost' to Miami-Dade if rest is awarded to USDD)

Item	Unit	Mfr	Qty	Description	Part No.	Unit	Ext	
				PHOENIX G2 - STATION CONTROLLER (Required)				
				Control up to (8) peripherals				
1	Kit	USDD	0	**G2 ATX STATION CONTROLLER** (Provided in 'Basic' Cost)	**ATX**	$ -	$ -	
2	Kit	USDD	0	Rack Mount Ears	ATX-E	N/C	N/C	
3	Kit	USDD	0	Base Plate	ATX-P	N/C	N/C	
				STATION CONTROLLER OPTIONS				
4	Kit	USDD	0	**ATX EXPANSION KIT**	**ATX-EXP**	$ -	$ -	
5	Kit	USDD	0	Rack Mount Ears	ATX-E	N/C	N/C	
6	Kit	USDD	0	Audio Extension Module	AUD-EXT	$ -	$ -	
7	Kit	USDD	0	Fiber LAN Modules (2)	FIB-LAN-KIT	$ -	$ -	
8	Ea	USDD	0	**G2 VOICEALERT** - (One Time) Single Station License (Provided in 'Basic' Cost)	**VA**	$ -	$ -	
				PERIPHERAL OPTIONS				
9	Ea	USDD	4	**G2 ROOM REMOTE** Module	**RR**	$ 1,650.00	$ 6,600.00	
10	Ea	USDD	0	RR Trim Plate, for Flush-Mount	RR-TP	$ -	$ -	
11	Ea	USDD	0	RR Back-Box, for solid-wall flush-mounting	RR-BB	$ -	$ -	
12	Ea	USDD	2	**G2 MESSAGE REMOTE** Module	**MR**	$ 1,050.00	$ 2,100.00	
13	Ea	USDD	0	**G2 SIGN REMOTE** Module (x1 Provided in 'Basic' Cost)	**SR**	$ -	$ -	
14	Ea	USDD	0	**G2 HDTV REMOTE** Module	**TVR**	$ -	$ -	
15	Ea	USDD	0	**G2 MESSAGE SIGN**, Digital LED (**GammaSign**)	**MS-G**	$ -	$ -	
15	Ea	USDD	6	**MESSAGE SIGN**, Digital LED (**BetaBrite**) (x1 already provided in 'Basic' cost)	**MS-B**	$ 324.00	$ 1,944.00	
16	Ea	USDD	4	MS Adapter Plate, VESA 100	MS-ADPT-V100	$ 54.00	$ 216.00	
17	Ea	USDD	2	MS Tie-Straps (pair) - join two MSs	MS-ADPT-STRP	$ 24.00	$ 48.00	
18	Ea	USDD	0	MS Mount - Articulating, Std. reach	MS-MNT-ART-S	$ -	$ -	
19	Ea	USDD	2	MS Mount - Articulating, Long reach	MS-MNT-ART-L	$ 259.00	$ 518.00	
20	Ea	USDD	0	MS Mount - X2 Arm, Artic., Long	MS-MNT-ART-LX2	$ -	$ -	
21	Ea	USDD	1	**G2 DOUBLE MS KIT** (MR, 90-deg Mount, x2MS)	**MS-X2K**	$ 1,860.00	$ 1,860.00	
22	Ea	USDD	0	**G2 I/O REMOTE** w/ 8 In & 8 Out	**IOR**	$ -	$ -	
23	Ea	USDD	0	Turnout Timer, Count Up, 2.25"X	TOT	$ -	$ -	
24	Ea	USDD	0	Strobe Light / Red LED	STR	$ -	$ -	
25	Ea	USDD	0	**G2 Color Indicator Remote** - Up to 8 unique colors	**CIR**	$ -	$ -	
26	Ea	USDD	0	Push Button, Standard (Black)	PB-B	$ -	$ -	
27	Ea	USDD	0	Push Button, Emergency (Red)	PB-R	$ -	$ -	
28	Ea	Atlas	0	Audio Amplifier, External, Standard	AMP	$ -	$ -	
29	Ea	Bogn	0	Speaker-APP/Weatherized (A2T), Surface, 70v	SPK-W-SM	$ -	$ -	
30	Ea	Bogn	6	Speaker - Standard, Flush Mount, 8Ω/70v (S86)	SPK-STD-FM	$ 66.00	$ 396.00	

31	Ea	Bogn	0	Speaker - Surface Mount (MB), 8Ω/70v	SPK-STD-SM	$	-	$	-
32	Ea	USDD	29	**G2 LED SPEAKER** - Flush Mount, 8Ω/70v	**SPK-LED-FM**	$	270.00	$	7,830.00
33	Ea	USDD	0	**G2 LED SPEAKER** - Surface Mount (MB), 8Ω/70v	**SPK-LED-SM**	$	-	$	-
34	Ea	TIC	4	Transformer, 8ohm to 70V, External	XFMR	$	48.00	$	192.00
35	Ea	TBD	0	ATX UPS, Standard (x1 Optioned in 'Basic' Cost)	UPS-STD	$	-	$	-
36	Ea	USDD	0	UPS Extended Runtime Battery	UPS-EXT	$	-	$	-
37	Ea	VAL	0	70-Volt Adapter Solution to tie new FSAS Output into existin amplified speakers	MD-XFMR	$	-	$	-
38	Ea	USDD	0	2-Channel Line-Level Audio Mixing Solution to tie into existing (OFE) Miami-Dade Audio System	MD-MXR	$	-	$	-
39	Ea	USDD	0	I/O Remote Audio Switching Panel to integrate with existing (OFE) Valcom Paging	MD-RASP	$	-	$	-

STATION-LEVEL SERVICES

40	Ea	USDD	1	**Station Installation**	**ST-INST**	$	13,800.00	$	13,800.00
41	Ea	USDD	0	**Station Remediation**	**ST-INST**	$	-	$	-
42	Ea	USDD	0	**Station Installation Supervision**	**ST-IS**	$	-	$	-
43	Ea	USDD	1	**Station Configuration & Start-Up**	**ST-SU**	$	1,302.00	$	1,302.00
44	Ea	USDD	1	**Station Project Management**	**ST-PM**	$	326.00	$	326.00
45	Ea	USDD	1	**Station Engineering / Design Services**	**ST-ES**	$	217.00	$	217.00
46	Ea	USDD	1	**Station Documentation**	**ST-DM**	$	33.00	$	33.00
47	Ea	USDD	0	**Station Training - User/Technician** via streamed online video with per-station license and participant registration/verification.	**TRA-UT-VID**	$	-	$	-
48	Ea	USDD	0	**Station Training - User/Technician. On-Site @ Station.** 1 Hour, 1 Visit. (3 Units/Hours suggested to cover 3 shifts)	**TRA-UT-OS**	$	-	$	-
49	Ea	USDD	0	**Training - Installation Contractor / USDD G2 Certification** (TBD - only needed if using non-certified contractor)	**TRA-IC**	$	-	$	-
50	Ea	USDD	0	**Miscellaneous/TBD**	**MISC**	$	-	$	-

FS69 Upgrades	**Individual Station Equipment & Services Subtotal**	$	37,382
	Individual Station Shipping	$	1,164
	INDIVIDUAL STATION GRAND TOTAL	$	**38,546**

Number of Stations of this type: 1

ENHANCED STATION / System & Services / Running Total : $37,382.00
All Stations / Shipping / Running Total : $1,164.00

Grand Total / Enhanced Station: $38,546.00
Good Faith Reduction, FS69 Upgrades -$38,546.00
Adjusted Grand Total / Enhanced Station: $0.00

If USDD's Proposal Response is accepted and a contract is agreed upon and awarded, then USDD will supply these upgraded components and their installation to Miami-Dade at no extra cost. This donation is an act of good faith to help this station serve as a 'showroom' for any future upgrades the county might wish for a later time. See 'Section Totals' Page for more info.

US DIGITAL DESIGNS
1835 E. Sixth St. Suite #27
Tempe, Arizona 85281
877-551-8733 tel *480-290-7892 fax*

QUOTE

DATE: 5/5/2014
Expires: 11/1/2014

Quote SUBMITTED TO:
Miami-Dade County
Fire Station Alerting System

REF PROPOSAL
MDF010 v2 **Station-Level Equipment/Services**

Portable FSAS

Basic/Core Fire Station Alerting System Design

Item	Unit	Mfr	Qty	Description	Part No.	Unit	Ext	
				PHOENIX G2 - STATION CONTROLLER (Required)				
				Control up to (8) peripherals				
1	Kit	USDD	1	**G2 ATX STATION CONTROLLER**	**ATX**	$ 18,000.00	$ 18,000.00	
2	Kit	USDD	0	Rack Mount Ears	ATX-E	N/C	N/C	
3	Kit	USDD	0	Base Plate	ATX-P	N/C	N/C	
				STATION CONTROLLER OPTIONS				
4	Kit	USDD	0	**ATX EXPANSION KIT**	**ATX-EXP**	$ -	$ -	
5	Kit	USDD	0	Rack Mount Ears	ATX-E	N/C	N/C	
6	Kit	USDD	0	Audio Extension Module	AUD-EXT	$ -	$ -	
7	Kit	USDD	0	Fiber LAN Modules (2)	FIB-LAN-KIT	$ -	$ -	
8	Ea	USDD	1	**G2 VOICEALERT** - (One Time) Single Station License	**VA**	$ 834.00	$ 834.00	
				PERIPHERAL OPTIONS				
9	Ea	USDD	0	**G2 ROOM REMOTE** Module	**RR**	$ -	$ -	
10	Ea	USDD	0	RR Trim Plate, for Flush-Mount	RR-TP	$ -	$ -	
11	Ea	USDD	0	RR Back-Box, for solid-wall flush-mounting	RR-BB	$ -	$ -	
12	Ea	USDD	0	**G2 MESSAGE REMOTE** Module	**MR**	$ -	$ -	
13	Ea	USDD	1	**G2 SIGN REMOTE** Module	**SR**	$ 525.00	$ 525.00	
14	Ea	USDD	0	**G2 HDTV REMOTE** Module	**TVR**	$ -	$ -	
15	Ea	USDD	0	**G2 MESSAGE SIGN**, Digital LED (**GammaSign**)	**MS-G**	$ -	$ -	
15	Ea	USDD	1	**MESSAGE SIGN**, Digital LED (**BetaBrite**)	**MS-B**	$ 324.00	$ 324.00	
16	Ea	USDD	0	MS Adapter Plate, VESA 100	MS-ADPT-V100	$ -	$ -	
17	Ea	USDD	0	MS Tie-Straps (pair) - join two MSs	MS-ADPT-STRP	$ -	$ -	
18	Ea	USDD	0	MS Mount - Articulating, Std. reach	MS-MNT-ART-S	$ -	$ -	
19	Ea	USDD	0	MS Mount - Articulating, Long reach	MS-MNT-ART-L	$ -	$ -	
20	Ea	USDD	0	MS Mount - X2 Arm, Artic., Long	MS-MNT-ART-LX2	$ -	$ -	
21	Ea	USDD	0	**G2 DOUBLE MS KIT** (MR, 90-deg Mount, x2MS)	**MS-X2K**	$ -	$ -	
22	Ea	USDD	0	**G2 I/O REMOTE** w/ 8 In & 8 Out	**IOR**	$ -	$ -	
23	Ea	USDD	0	Turnout Timer, Count Up, 2.25"X	TOT	$ -	$ -	
24	Ea	USDD	0	Strobe Light / Red LED	STR	$ -	$ -	
25	Ea	USDD	0	**G2 Color Indicator Remote** - Up to 8 unique colors	**CIR**	$ -	$ -	
26	Ea	USDD	0	Push Button, Standard (Black)	PB-B	$ -	$ -	
27	Ea	USDD	0	Push Button, Emergency (Red)	PB-R	$ -	$ -	
28	Ea	Atlas	0	Audio Amplifier, External, Standard	AMP	$ -	$ -	
29	Ea	Bogn	2	Speaker-**APP**/Weatherized (**A2T**), Surface, 70v (added post-RFP by MDFR)	SPK-W-SM	$ 252.00	$ 504.00	
30	Ea	Bogn	0	Speaker - Standard, Flush Mount, 8Ω/70v (**S86**)	SPK-STD-FM	$ -	$ -	
31	Ea	Bogn	0	Speaker - Surface Mount (**MB**), 8Ω/70v	SPK-STD-SM	$ -	$ -	
32	Ea	USDD	0	**G2 LED SPEAKER** - Flush Mount, 8Ω/70v	**SPK-LED-FM**	$ -	$ -	
33	Ea	USDD	2	**G2 LED SPEAKER** - Surface Mount (**MB**), 8Ω/70v	**SPK-LED-SM**	$ 270.00	$ 540.00	

34	Ea	TIC	0	Transformer, 8ohm to 70V, External	XFMR	$ -	$ -	
35	Ea	TBD	0	ATX UPS, Standard (removed post-RFP by MDFR)	UPS-STD	$ -	$ -	
36	Ea	USDD	0	UPS Extended Runtime Battery	UPS-EXT	$ -	$ -	
39	Ea	USDD	1	Protective Case - Custom Enclosure	MD-RASP	$ 2,400.00	$ 2,400.00	

STATION-LEVEL SERVICES

40	Ea	USDD	0	**Station Installation**	**ST-INST**	$ -	$ -	
41	Ea	USDD	0	**Station Remediation**	**ST-INST**	$ -	$ -	
42	Ea	USDD	0	**Station Installation Supervision**	**ST-IS**	$ -	$ -	
43	Ea	USDD	0	**Station Configuration & Start-Up**	**ST-SU**	$ -	$ -	
44	Ea	USDD	0	**Station Project Management**	**ST-PM**	$ -	$ -	
45	Ea	USDD	0	**Station Engineering / Design Services**	**ST-ES**	$ -	$ -	
46	Ea	USDD	0	**Station Documentation**	**ST-DM**	$ -	$ -	
47	Ea	USDD	0	**Station Training - User/Technician** via streamed online video with per-station license and participant registration/verification.	**TRA-UT-VID**	$ -	$ -	
48	Ea	USDD	0	**Station Training - User/Technician. On-Site @ Station.** 1 Hour, 1 Visit. (3 Units/Hours suggested to cover 3 shifts)	**TRA-UT-OS**	$ -	$ -	
49	Ea	USDD	0	**Training - Installation Contractor / USDD G2 Certification** (TBD - only needed if using non-certified contractor)	**TRA-IC**	$ -	$ -	
50	Ea	USDD	0	**Miscellaneous/TBD**	**MISC**	$ -	$ -	

Portable FSAS	**Portable System Subtotal**	$	23,127
	Portable System Shipping	$	380
	PORTABLE SYSTEM GRAND TOTAL	$	**23,507**

Number of Portable Systems of this type: 1

ALL PORTABLE / System & Services / Running Total :	**$23,127.00**
All Portable / Shipping / Running Total :	$380.00
Grand Total / Portable Systems :	**$23,507.00**

US DIGITAL DESIGNS
1835 E. Sixth St. Suite #27
Tempe, Arizona 85281
877-551-8733 tel 480-290-7892 fax

QUOTE

DATE: 5/5/2014
Expires: 11/1/2014

Quote SUBMITTED TO:
Miami-Dade County
Fire Station Alerting System

REF PROPOSAL
MDF010 v2 **Station-Level Equipment/Services**

SPARES
Basic/Core Fire Station Alerting System Design

Item	Unit	Mfr	Qty	Description	Part No.	Unit	Ext	
				PHOENIX G2 - STATION CONTROLLER (Required)				
				Control up to (8) peripherals				
1	Kit	USDD	1	**G2 ATX STATION CONTROLLER**	**ATX**	$ 18,000.00	$ 18,000.00	
2	Kit	USDD	0	Rack Mount Ears	ATX-E	N/C	N/C	
3	Kit	USDD	0	Base Plate	ATX-P	N/C	N/C	
				STATION CONTROLLER OPTIONS				
4	Kit	USDD	0	**ATX EXPANSION KIT**	**ATX-EXP**	$ -	$ -	
5	Kit	USDD	0	Rack Mount Ears	ATX-E	N/C	N/C	
6	Kit	USDD	0	Audio Extension Module	AUD-EXT	$ -	$ -	
7	Kit	USDD	0	Fiber LAN Modules (2)	FIB-LAN-KIT	$ -	$ -	
8	Ea	USDD	0	**G2 VOICEALERT** - (One Time) Single Station License	**VA**	$ -	$ -	
				PERIPHERAL OPTIONS				
9	Ea	USDD	0	**G2 ROOM REMOTE** Module	**RR**	$ -	$ -	
10	Ea	USDD	0	RR Trim Plate, for Flush-Mount	RR-TP	$ -	$ -	
11	Ea	USDD	0	RR Back-Box, for solid-wall flush-mounting	RR-BB	$ -	$ -	
12	Ea	USDD	1	**G2 MESSAGE REMOTE** Module	**MR**	$ 1,050.00	$ 1,050.00	
13	Ea	USDD	1	**G2 SIGN REMOTE** Module	**SR**	$ 525.00	$ 525.00	
14	Ea	USDD	1	**G2 HDTV REMOTE** Module	**TVR**	$ 786.00	$ 786.00	
15	Ea	USDD	0	**G2 MESSAGE SIGN**, Digital LED (**GammaSign**)	**MS-G**	$ -	$ -	
15	Ea	USDD	1	**MESSAGE SIGN**, Digital LED (**BetaBrite**)	**MS-B**	$ 324.00	$ 324.00	
16	Ea	USDD	2	MS Adapter Plate, VESA 100	MS-ADPT-V100	$ 54.00	$ 108.00	
17	Ea	USDD	1	MS Tie-Straps (pair) - join two MSs	MS-ADPT-STRP	$ 24.00	$ 24.00	
18	Ea	USDD	0	MS Mount - Articulating, Std. reach	MS-MNT-ART-S	$ -	$ -	
19	Ea	USDD	1	MS Mount - Articulating, Long reach	MS-MNT-ART-L	$ 259.00	$ 259.00	
20	Ea	USDD	0	MS Mount - X2 Arm, Artic., Long	MS-MNT-ART-LX2	$ -	$ -	
21	Ea	USDD	0	**G2 DOUBLE MS KIT** (MR, 90-deg Mount, x2MS)	**MS-X2K**	$ -	$ -	
22	Ea	USDD	0	**G2 I/O REMOTE** w/ 8 In & 8 Out	**IOR**	$ -	$ -	
23	Ea	USDD	0	Turnout Timer, Count Up, 2.25"X	TOT	$ -	$ -	
24	Ea	USDD	0	Strobe Light / Red LED	STR	$ -	$ -	
25	Ea	USDD	0	**G2 Color Indicator Remote** - Up to 8 unique colors	**CIR**	$ -	$ -	
26	Ea	USDD	0	Push Button, Standard (Black)	PB-B	$ -	$ -	
27	Ea	USDD	0	Push Button, Emergency (Red)	PB-R	$ -	$ -	
28	Ea	Atlas	0	Audio Amplifier, External, Standard	AMP	$ -	$ -	
29	Ea	Bogn	1	Speaker-**APP**/Weatherized (**A2T**), Surface, 70v (added by MDFR post-RFP)	SPK-W-SM	$ 252.00	$ 252.00	
30	Ea	Bogn	1	Speaker - Standard, Flush Mount, 8Ω/70v (**S86**) (added	SPK-STD-FM	$ 66.00	$ 66.00	
31	Ea	Bogn	0	Speaker - Surface Mount (**MB**), 8Ω/70v	SPK-STD-SM	$ -	$ -	
32	Ea	USDD	1	**G2 LED SPEAKER** - Flush Mount, 8Ω/70v (added by MDFR post-RFP)	**SPK-LED-FM**	$ 270.00	$ 270.00	

33	Ea	USDD	1	**G2 LED SPEAKER** - Surface Mount (MB), 8Ω/70v	**SPK-LED-SM**	$	270.00	$ 270.00	
34	Ea	TIC	0	Transformer, 8ohm to 70V, External	XFMR	$	-	$ -	
35	Ea	TBD	0	ATX UPS, Standard (listed seperately / Form B-1)	UPS-STD	$	-	$ -	
36	Ea	USDD	0	UPS Extended Runtime Battery	UPS-EXT	$	-	$ -	
37	Ea	VAL	1	70-Volt Adapter Solution to tie new FSAS Output into existing amplified speakers	MD-XFMR	$	200.00	$ 200.00	
38	Ea	USDD	1	2-Channel Line-Level Audio Mixing Solution to tie into existing (OFE) Miami-Dade Audio System	MD-MXR	$	150.00	$ 150.00	
39	Ea	USDD	1	I/O Remote Audio Switching Panel to integrate with existing (OFE) Valcom Paging	MD-RASP	$	1,550.00	$ 1,550.00	

SPARES			
	Spare Set Subtotal	$	23,834
	Spare Set Shipping	$	500
	SPARE SET GRAND TOTAL	$	24,334

Number of SPARE SETS of this type: 2
(MDFR Reduced Requirement from 4 to 2)

ALL SPARES / System & Services / Running Total :	**$47,668.00**
All Spares / Shipping / Running Total :	$1,000.00
Grand Total / Spares :	**$48,668.00**

US DIGITAL DESIGNS
1835 E. Sixth St. Suite #27
Tempe, Arizona 85281
877-551-87335 tel 480-290-7892 fax

QUOTE

DATE: 5/5/2014
Expires: 11/1/2014

Quote SUBMITTED TO:
Miami-Dade County
Fire Station Alerting System

REF PROPOSAL
MDF010 v2

Recurring Annual Support Options

Customer must elect to choose any coverage beyond 1st Year of Standard Warranty

Item	Unit	Mfr	Qty	Description	Part No.	Unit	Ext	
STANDARD Annual Support Options								
1	LOT	USDD	1	**[STANDARD] 1st YEAR SUPPORT** Telephone / Remote Access Support (8:00 AM - 5:00 PM MST)	**RS-1YR-STD**	$ 187,934.51	**No Charge - Included in Purchase**	
2	LOT	USDD	0	**[STANDARD] ADDITIONAL / RECURRING ANNUAL SUPPORT OPTION (PER YEAR)** Telephone / Remote Access Support (8:00 AM - 5:00 PM MST)	**RS-AYR-STD**	$ 187,934.51	$ -	

Full Miami-Dade Support/Maintenance Details in 'Section Totals' and Form B-1 Sections

SUPPORT OPTIONS TOTAL: $ -

Support Agreements subject to change if system design is modified. For additional details, please review current USDD Warranty Statement and Service Agreement

US DIGITAL DESIGNS
1835 E. Sixth St. Suite #27
Tempe, Arizona 85281
877-551-8733 tel 480-290-7892 fax

QUOTE

DATE: 5/5/2014
Expires: 11/1/2014

Quote SUBMITTED TO:
Miami-Dade County
Fire Station Alerting System

REF PROPOSAL
MDF010 v2

Section Totals

Dispatch-Level FSAS Subtotal	$	313,550.40	(Total for x2 Locations)
(Does NOT include any kind of Motorla Costs - that requirement was removed)			
INSTALLED Basic Station-Level FSAS Subtota	$	1,924,910.00	(Installed Total-65 Locations)
No-Install Costs detailed in Form B-1			
Upgrades/Enhancements to FS02	$	38,546.00	(Total for FS02)
Portable System	$	23,507.00	(Total for x1 System)
Spares	$	48,668.00	(x2 Spare Sets)
5-Years 'Post-Warranty' Support	$	939,672.56	(Six Years Total) (Also see Form B-1)
US Digital Designs System Total	**$**	**3,288,853.96**	
Good Faith Reduction, FS02 Upgrades	$	(38,546.00)	(Showroom Equipment)

If USDD's Proposal Response is accepted and a contract is agreed upon and awarded, then USDD will supply these upgraded components and their installation to Miami-Dade at no extra cost. This donation is an act of good faith to help this station serve as a 'showroom' for any future upgrades the county might wish for a later time.

INSTALLED FINAL COST TO MIAMI-DADE	**$**	**3,250,307.96**

If purchased complete and installed as listed above / also see MDFR Price Format Enclosed

Miami-Dade County RFP No.899

Format for Revised Form B-1: Price Proposal Schedule

SECTION 1: Station Installations

Station Pricing (1-65) - Includes all costs associated with providing IP Alerting Capabilities for the stations. Does not include Dispatch, Spares or Portable - those costs detailed below and in separate supplement per AddendumS #5 & #7.		**$1,924,910.00**	**A. Total Price for all 65 Stations with installation** - This price includes discounts (such as donated FS02 Upgrades, etc.)
$3,177.00	Cost, per-station, for installation	**$1,669,655.00**	**B. Total Price for all 65 Stations without installation** - This price includes discounts (such as donated FS02 Upgrades, etc.)

Post Warranty:
HARDWARE Support per year for 5 one-year periods:

Year One	$187,934.51	**$939,672.56**	**Total For the 5 Years AFTER WARRANTY EXPIRES - SIX YEARS TOTAL AS DEFINED BY 'POST WARRANTY' SECTION HEADING.** See notes below in RED.
Year Two	$187,934.51		
Year Three	$187,934.51		
Year Four	$187,934.51		
Year Five	$187,934.51		

PLEASE NOTE HARDWARE AND SOFTWARE SUPPORT ARE ALWAYS SUPPORTED TOGETHER - OUR SUPPORT CANNOT BE BROKEN OUT SEPERATELY. SUPPORT IS ALL-INCLUSIVE. THE COST STATED ABOVE COST COVERS BOTH HARDWARE AND SOFTWARE.

Post Warranty:
SOFTWARE Support per year for 5 one-year periods:

Year One	N/A - Included in Warranty	**See Above in RED**	**Total For the 5 Years.** See notes below in RED.
Year Two	See Above in RED		
Year Three	See Above in RED		
Year Four	See Above in RED		
Year Five	See Above in RED		

SECTION 2: Additional Pricing: Dispatch & Additional Hardware			
Dispatch Center(s) Equipment and Services		$313,550.40	**Total Price for two dispatch center locations**
Two Sites	Primary & Backup		
Cost of Motorola's Side of CAD-FSAS Interface		$0.00	**No longer Applicable - Requirement for USDD to include Motorola CAD Interface Costs has been removed.**
N/A	County removed the requirement for USDD to provide CAD Interface Costs from Motorola		
Total Cost / Dispatch Locations		**$313,550.40**	
Spares		**$48,668.00**	**Total Price for x2 spare sets requested.**
Per Set (x2 requested)	$24,334.00		
Portable FSA System		**$23,507.00**	**Total Price for one portable kit**
Per Kit (x1)	$23,507.00		
Total Cost for Stations with Installation		**$3,250,307.96**	**Costs to the left include x65 Stations, 6 Years of Support (Warranty +5yrs), No-Charge Upgrades to FS02, Dispatch Center Equipment, Spares and Portable System. Does not include recently-requested New-Build Stations # 54&70 or requestd 'Demo' Station (listed in 'Options' Section, nor does it include Requested Upgrades (from 'Basic' System previously proposed) for ARFF Stations 12, 25 or 59.**
Total Cost for Stations without Installation		**$2,995,052.96**	

SECTION 3: Additional Pricing: Miscellaneous			
1) UAP (User Access Program) Charges			Requirement removed by MD
2) 'Audit' (Inspector General Review) Charges			Requirement removed by MD
3) Errors and Omissions Insurance		**$16,000.00**	Per-Year Cost to M-D, for every year it requires USDD to carry this insurance for this project.
4)			
Uninterruptible Power Supply		**$60,882.00**	**Total Price for all 65 'Basic' Stations, +1 FS12, +1 FS25, +1 FS59, +2 for FS64, +2 FS70, +1 FS70, +1 Demo Station = 73 TOTAL**
Per UPS	$834.00		

SECTION 4: Additional Pricing: Hourly Rates		
Project Manager	**$105.00**	Per Hour (standard M-F, 7-5)
Engineer	**$130.00**	Per Hour (standard M-F, 7-5)
Technician	**$105.00**	Per Hour (standard M-F, 7-5)
Other(s)	**$54.00**	Per Hour

OPTIONS: Requested Listing of Post-RFP Add/Alts		
Station Options / Additional Equipment and Services (Subtotal of that requested from larger/following 'Menu-Style' for this category)	**$0.00**	**TBD** - need final MDFR determination. Includes **Component and Radio Modem Options.**
Dispatch Options / Additional Equipment and Services (Subtotal of that requested from larger/following 'Menu-Style' for this category)	**$0.00**	**TBD** - need final MDFR determination. **Component and PTT ID Application Options.**
FS12 UPGRADES (from 'Basic' System) **Option - INSTALLED** (In addition to 'Basic System' already proposed and included previously)	**$42,851.00**	Includes installation
FS12 UPGRADES (from 'Basic' System) **Option - NO-INSTALL** (In addition to 'Basic System' already proposed and included previously)	**$26,254.00**	Does not included installation
FS25 UPGRADES (from 'Basic' System) **Option - INSTALLED** (In addition to 'Basic System' already proposed and included previously)	**$21,194.00**	Includes installation
FS25 UPGRADES (from 'Basic' System) **Option - NO-INSTALL** (In addition to 'Basic System' already proposed and included previously)	**$9,650.00**	Does not included installation
FS59 UPGRADES (from 'Basic' System) **Option - INSTALLED** (In addition to 'Basic System' already proposed and included previously)	**$40,391.00**	Includes installation
F59 UPGRADES (from 'Basic' System) **Option - NO-INSTALL** (In addition to 'Basic System' already proposed and included previously)	**$20,955.00**	Does not included installation
FS64 Option - Installed (This station was not previously included - now Subtotal of that as-requested and as-proposed Post-RFP)	**$76,071.00**	Includes installation
FS64 Option - No-Install (This station was not previously included - now Subtotal of that as-requested and as-proposed Post-RFP)	**$55,071.00**	Does not included installation
FS70 Option - Installed (This station was not previously included - now Subtotal of that as-requested and as-proposed Post-RFP)	**$73,416.00**	Includes installation
FS70 Option - No-Install (This station was not previously included - now Subtotal of that as-requested and as-proposed Post-RFP)	**$53,126.00**	Does not included installation
DEMO STATION Option - Installed (This station was not previously included - now Subtotal of that as-requested and as-proposed Post-RFP)	**$27,377.00**	Includes installation
DEMO STATION Option - No-Install (This station was not previously included - now Subtotal of that as-requested and as-proposed Post-RFP)	**$24,977.00**	Does not included installation

Subtotal of Final Requested Options / Add/Alts: **TBD**

US DIGITAL DESIGNS
1835 E. Sixth St. Suite #27
Tempe, Arizona 85281
877-551-8733 tel *480-290-7892 fax*

QUOTE

DATE: 5/5/2014
Expires: 11/1/2014

Quote SUBMITTED TO:
Miami-Dade County
Fire Station Alerting System

REF PROPOSAL
MDF010 v2

Station-Level Equipment/Service Options

Station Options

Not included in RFP Response. Installation not assumed nor included - Material/Service Costs only per RFP Request

Item	Unit	Mfr	Qty	Description	Part No.	Unit	Ext	
				PHOENIX G2 - STATION CONTROLLER (Required)				
				Control up to (8) peripherals				
1	Kit	USDD	0	**G2 ATX STATION CONTROLLER**	**ATX**	$ 18,000.00	$ -	
				STATION CONTROLLER OPTIONS				
4	Kit	USDD	0	**ATX EXPANSION KIT**	**ATX-EXP**	$ 5,994.00	$ -	
6	Kit	USDD	0	Audio Extension Module	AUD-EXT	$ 420.00	$ -	
7	Kit	USDD	0	Fiber LAN Modules (2)	FIB-LAN-KIT	$ 420.00	$ -	
8	Ea	USDD	0	**G2 VOICEALERT** - (One Time) Single Station License	**VA**	$ 834.00	$ -	
				PERIPHERAL OPTIONS				
9	Ea	USDD	0	**G2 ROOM REMOTE** Module	**RR**	$ 1,650.00	$ -	
10	Ea	USDD	0	RR Trim Plate, for Flush-Mount	RR-TP	$ 42.00	$ -	
11	Ea	USDD	0	RR Back-Box, for solid-wall flush-mounting	RR-BB	$ 78.00	$ -	
12	Ea	USDD	0	**G2 MESSAGE REMOTE** Module	**MR**	$ 1,050.00	$ -	
13	Ea	USDD	0	**G2 SIGN REMOTE** Module	**SR**	$ 525.00	$ -	
14	Ea	USDD	0	**G2 HDTV REMOTE** Module	**TVR**	$ 786.00	$ -	
15	Ea	USDD	0	**G2 MESSAGE SIGN**, Digital LED (**GammaSign**)	**MS-G**	$ 795.00	$ -	
15	Ea	USDD	0	**MESSAGE SIGN**, Digital LED (**BetaBrite**)	**MS-B**	$ 324.00	$ -	
16	Ea	USDD	0	MS Adapter Plate, VESA 100	MS-ADPT-V100	$ 54.00	$ -	
17	Ea	USDD	0	MS Tie-Straps (pair) - join two MSs	MS-ADPT-STRP	$ 24.00	$ -	
18	Ea	USDD	0	MS Mount - Articulating, Std. reach	MS-MNT-ART-S	$ 112.00	$ -	
19	Ea	USDD	0	MS Mount - Articulating, Long reach	MS-MNT-ART-L	$ 259.00	$ -	
20	Ea	USDD	0	MS Mount - X2 Arm, Artic., Long	MS-MNT-ART-LX2	$ 371.00	$ -	
21	Ea	USDD	0	**G2 DOUBLE MS KIT** (MR, 90-deg Mount, x2MS)	**MS-X2K**	$ 1,860.00	$ -	
22	Ea	USDD	0	**G2 I/O REMOTE** w/ 8 In & 8 Out	**IOR**	$ 1,050.00	$ -	
23	Ea	USDD	0	Turnout Timer, Count Up, 2.25"X	TOT	$ 450.00	$ -	
24	Ea	USDD	0	Strobe Light / Red LED	STR	$ 450.00	$ -	
25	Ea	USDD	0	**G2 Color Indicator Remote** - Up to 8 unique colors	**CIR**	$ 570.00	$ -	
26	Ea	USDD	0	Push Button, Standard (Black) (Can be used for requested recall/reset function - install not included)	PB-B	$ 90.00	$ -	
27	Ea	USDD	0	Push Button, Emergency (Red)	PB-R	$ 90.00	$ -	
28	Ea	Atlas	0	Audio Amplifier, External, Standard	AMP	$ 888.00	$ -	
29	Ea	Bogn	0	Speaker-**APP**/Weatherized (**A2T**), Surface, 70v	SPK-W-SM	$ 252.00	$ -	
30	Ea	Bogn	0	Speaker - Standard, Flush Mount, 8Ω/70v (**S86**)	SPK-STD-FM	$ 66.00	$ -	
31	Ea	Bogn	0	Speaker - Surface Mount (**MB**), 8Ω/70v	SPK-STD-SM	$ 66.00	$ -	
32	Ea	USDD	0	**G2 LED SPEAKER** - Flush Mount, 8Ω/70v	**SPK-LED-FM**	$ 270.00	$ -	
33	Ea	USDD	0	**G2 LED SPEAKER** - Surface Mount (**MB**), 8Ω/70v	**SPK-LED-SM**	$ 270.00	$ -	
34	Ea	TIC	0	Transformer, 8ohm to 70V, External	XFMR	$ 48.00	$ -	
35	Ea	TBD	0	ATX UPS, Standard	UPS-STD	$ 834.00	$ -	
36	Ea	USDD	0	UPS Extended Runtime Battery	UPS-EXT	$ 2,485.00	$ -	

STATION-LEVEL SERVICES

37	Ea	USDD	0	**Station Training - User/Technician** via streamed online video with per-station license and participant registration/verification (PER USER).	**TRA-UT-VID**	$ 350.00	$ -	

MDFR Requested Station Options

38	Ea	USDD	0	**Radio Modem** for alternate communications pathway TBD from MDFR spec. will be documented cost + 10% cost to MDFR	**MD-RM**	$ -	$ -	

Station Options	**Station Options Subtotal:**	$ -	TBD
	Station Options Shipping:	$ -	TBD
	STATION OPTIONS GRAND TOTAL:	$ -	TBD

REF PROPOSAL

MDF010 v2

Dispatch-Level Equipment/Service Options

Dispatch Center Options

Item	Unit	Mfr	Qty	Description	Part No.	Unit	Ext	
				COMMUNICATIONS GATEWAY EQUIPMENT OPTIONS				
1	PR	USDD	0	**G2 Communications Gateway Pair** (MDFR Request for Dual Power Supply and Multiple Ethernet Ports)	MD-G2-GW	$ 7,500.00	$ -	
2	Kit	USDD	0	**G2 Gateway Audio Serial Interface (GaSi) / IP / 2-Channels**	GaSi	$ 1,695.00	$ -	
3	Kit	USDD	0	**G2 HDTV Remote module** (How many desired for offices? Installation NOT Included)	TVR	$ 786.00	$ -	
4	Kit	USDD	0	**G2 Light Tower Interface**	LTI	$ 465.00	$ -	
				COMMUNICATIONS GATEWAY SERVICE OPTIONS				
12	LOT	USDD	0	Training - System Administrator	TRA-SA	$ 2,150.00	$ -	
13	LOT	USDD	0	Training - Dispatch Operator	TRA-DO	$ 2,150.00	$ -	
14	LOT	USDD	0	G2 FSAS App (no charge when under warranty or support)	G2-APP	$ -	$ -	
15	LOT	USDD	0	Misc Option 1		$ -	$ -	
				MDFR REQUESTED OPTIONS				
	PTT ID Application: To track radios, PTTs and stolen radios							
16	Project	USDD	0	**PTT ID.:** Development and Delivery of Software/Application Solution	MD-PTT-ID	$ 28,000.00	0	

Dispatch Options Subtotal:	**$0.00**	TBD
Dispatch Options Shipping:	$0.00	TBD
DISPATCH OPTION GRAND TOTAL:	**$0.00**	TBD

INSTALLED FS12 UPGRADE OPTION

INSTALLED - ARFF (Retrofit) - Post RFP Requested Upgrades (to previously-proposed/included 'Basic' System)

Item	Unit	Mfr	Qty	Description	Part No.	Unit	Ext	

PHOENIX G2 - STATION CONTROLLER (Required)

Control up to (8) peripherals

1	Kit	USDD	1	**G2 ATX STATION CONTROLLER** (provided in 'Basic' System previously proposed).	**ATX**	$ 18,000.00	Included Previously	
2	Kit	USDD	0	Rack Mount Ears	ATX-E	N/C	N/C	
3	Kit	USDD	0	Base Plate	ATX-P	N/C	N/C	

STATION CONTROLLER OPTIONS

4	Kit	USDD	0	**ATX EXPANSION KIT**	**ATX-EXP**	$ -	$ -	
5	Kit	USDD	0	Rack Mount Ears	ATX-E	N/C	N/C	
6	Kit	USDD	0	Audio Extension Module	AUD-EXT	$ -	$ -	
7	Kit	USDD	0	Fiber LAN Modules (2)	FIB-LAN-KIT	$ -	$ -	
8	Ea	USDD	1	**G2 VOICEALERT** - (provided in 'Basic' System previously proposed).	**VA**	$ 834.00	Included Previously	

PERIPHERAL OPTIONS

9	Ea	USDD	1	**G2 ROOM REMOTE** Module	**RR**	$ 1,650.00	$ 1,650.00	
10	Ea	USDD	0	RR Trim Plate, for Flush-Mount	RR-TP	$ -	$ -	
11	Ea	USDD	0	RR Back-Box, for solid-wall flush-mounting	RR-BB	$ -	$ -	
12	Ea	USDD	3	**G2 MESSAGE REMOTE** Module	**MR**	$ 1,050.00	$ 3,150.00	
13	Ea	USDD	1	**G2 SIGN REMOTE** Module (x1 already provided in 'Basic'System previously proposed).	**SR**	$ 525.00	Included Previously	
13	Ea	USDD	0	**G2 SIGN REMOTE** Module (Needed for this upgraded system in addition to x1 already provided in 'Basic' design proposed).	**SR**	$ -	$ -	
14	Ea	USDD	0	**G2 HDTV REMOTE** Module	**TVR**	$ -	$ -	
15	Ea	USDD	0	**G2 MESSAGE SIGN**, Digital LED (**GammaSign**)	**MS-G**	$ -	$ -	
15	Ea	USDD	1	**MESSAGE SIGN**, Digital LED (**BetaBrite**) (x1 already provided in 'Basic'System previously	**MS-B**	$ 324.00	Included Previously	
15	Ea	USDD	6	**MESSAGE SIGN**, Digital LED (**BetaBrite**) (Needed for this upgraded system in addition to x1 already provided in 'Basic' design proposed).	**MS-B**	$ 324.00	$ 1,944.00	
16	Ea	USDD	6	MS Adapter Plate, VESA 100	MS-ADPT-V100	$ 54.00	$ 324.00	
17	Ea	USDD	3	MS Tie-Straps (pair) - join two MSs	MS-ADPT-STRP	$ 24.00	$ 72.00	
18	Ea	USDD	0	MS Mount - Articulating, Std. reach	MS-MNT-ART-S	$ -	$ -	
19	Ea	USDD	3	MS Mount - Articulating, Long reach	MS-MNT-ART-L	$ 259.00	$ 777.00	
20	Ea	USDD	0	MS Mount - X2 Arm, Artic., Long	MS-MNT-ART-LX2	$ -	$ -	
21	Ea	USDD	0	**G2 DOUBLE MS KIT** (MR, 90-deg Mount, x2MS)	**MS-X2K**	$ -	$ -	
22	Ea	USDD	0	**G2 I/O REMOTE** w/ 8 In & 8 Out	**IOR**	$ -	$ -	
23	Ea	USDD	0	Turnout Timer, Count Up, 2.25"X	TOT	$ -	$ -	
24	Ea	USDD	0	Strobe Light / Red LED	STR	$ -	$ -	
25	Ea	USDD	0	**G2 Color Indicator Remote** - Up to 8 unique colors	**CIR**	$ -	$ -	
26	Ea	USDD	0	Push Button, Standard (Black)	PB-B	$ -	$ -	
27	Ea	USDD	0	Push Button, Emergency (Red)	PB-R	$ -	$ -	
28	Ea	Atlas	0	Audio Amplifier, External, Standard	AMP	$ -	$ -	
29	Ea	Bogn	11	Speaker-**APP**/Weatherized (**A2T**), Surface, 70v	SPK-W-SM	$ 252.00	$ 2,772.00	
30	Ea	Bogn	24	Speaker - Standard, Flush Mount, 8Ω/70v (**S86**)	SPK-STD-FM	$ 66.00	$ 1,584.00	
31	Ea	Bogn	0	Speaker - Surface Mount (**MB**), 8Ω/70v	SPK-STD-SM	$ -	$ -	
32	Ea	USDD	38	**G2 LED SPEAKER** - Flush Mount, 8Ω/70v	**SPK-LED-FM**	$ 270.00	$ 10,260.00	
33	Ea	USDD	0	**G2 LED SPEAKER** - Surface Mount (**MB**), 8Ω/70v	**SPK-LED-SM**	$ -	$ -	
34	Ea	TIC	1	Transformer, 8ohm to 70V, External	XFMR	$ 48.00	$ 48.00	
35	Ea	TBD	0	ATX UPS, Standard (listed seperately / Form B-1 / x2 Needed for this station)	UPS-STD	$ -	$ -	
36	Ea	USDD	0	UPS Extended Runtime Battery	UPS-EXT	$ -	$ -	

37	Ea	VAL	1	70-Volt Adapter Solution to tie new FSAS Output into existing amplified speakers (x1 already provided in 'Basic'System previously proposed).	MD-XFMR	$ 200.00	Included Previously	
38	Ea	USDD	1	2-Channel Line-Level Audio Mixing Solution to tie into existing (OFE) Miami-Dade Audio System (x1 already provided in 'Basic'System previously proposed).	MD-MXR	$ 150.00	Included Previously	
39	Ea	USDD	1	I/O Remote Audio Switching Panel to integrate with existing (OFE) Valcom Paging (x1 already provided in 'Basic'System previously proposed).	MD-RASP	$ 1,550.00	Included Previously	

STATION-LEVEL SERVICES

40	Ea	USDD	1	**Station Installation** (Installation of Upgrades Only - 'Basic' System Installation already included previously)	**ST-INST**	$ 16,597.00	$ 16,597.00	
41	Ea	USDD	0	**Station Remediation**	**ST-INST**	$ -	$ -	
42	Ea	USDD	0	**Station Installation Supervision**	**ST-IS**	$ -	$ -	
43	Ea	USDD	1	**Station Configuration & Start-Up**	**ST-SU**	$ 677.00	$ 677.00	
44	Ea	USDD	1	**Station Project Management**	**ST-PM**	$ 565.00	$ 565.00	
45	Ea	USDD	1	**Station Engineering / Design Services**	**ST-ES**	$ 226.00	$ 226.00	
46	Ea	USDD	1	**Station Documentation**	**ST-DM**	$ 34.00	$ 34.00	
47	Ea	USDD	0	**Station Training - User/Technician** via streamed online video with per-station license and participant registration/verification.	**TRA-UT-VID**	$ -	$ -	
48	Ea	USDD	0	**Station Training - User/Technician. On-Site @ Station.** 1 Hour, 1 Visit. (3 Units/Hours suggested to cover 3 shifts)	**TRA-UT-OS**	$ -	$ -	
49	Ea	USDD	0	**Training - Installation Contractor / USDD G2 Certification** (TBD - only needed if using non-certified contractor)	**TRA-IC**	$ -	$ -	
50	Ea	USDD	0	**Miscellaneous/TBD**	**MISC**	$ -	$ -	

INSTALLED FS12 UPGRADE OPTION	**Individual Station Equipment Subtotal**	$	40,680
	Individual Station Shipping	$	2,171
	INDIVIDUAL STATION GRAND TOTAL	$	**42,851**

NO-INSTALL FS12 UPGRADE OPTION

NO INSTALL - ARFF (Retrofit) - Post-RFP Requested Upgrades (to previously-proposed/included 'Basic' System)

Item	Unit	Mfr	Qty	Description	Part No.	Unit	Ext	

PHOENIX G2 - STATION CONTROLLER (Required)

Control up to (8) peripherals

1	Kit	USDD	1	**G2 ATX STATION CONTROLLER** (provided in 'Basic' System previously proposed).	**ATX**	$ 18,000.00	Included Previously	
2	Kit	USDD	0	Rack Mount Ears	ATX-E	N/C	N/C	
3	Kit	USDD	0	Base Plate	ATX-P	N/C	N/C	

STATION CONTROLLER OPTIONS

4	Kit	USDD	0	**ATX EXPANSION KIT**	**ATX-EXP**	$ -	$ -	
5	Kit	USDD	0	Rack Mount Ears	ATX-E	N/C	N/C	
6	Kit	USDD	0	Audio Extension Module	AUD-EXT	$ -	$ -	
7	Kit	USDD	0	Fiber LAN Modules (2)	FIB-LAN-KIT	$ -	$ -	
8	Ea	USDD	1	**G2 VOICEALERT** - (provided in 'Basic' System previously proposed).	**VA**	$ 834.00	Included Previously	

PERIPHERAL OPTIONS

9	Ea	USDD	1	**G2 ROOM REMOTE** Module	**RR**	$ 1,650.00	$ 1,650.00	
10	Ea	USDD	0	RR Trim Plate, for Flush-Mount	RR-TP	$ -	$ -	
11	Ea	USDD	0	RR Back-Box, for solid-wall flush-mounting	RR-BB	$ -	$ -	
12	Ea	USDD	3	**G2 MESSAGE REMOTE** Module	**MR**	$ 1,050.00	$ 3,150.00	
13	Ea	USDD	1	**G2 SIGN REMOTE** Module (x1 already provided in 'Basic'System previously proposed).	**SR**	$ 525.00	Included Previously	
13	Ea	USDD	0	**G2 SIGN REMOTE** Module (Needed for this upgraded system in addition to x1 already provided in 'Basic' design proposed).	**SR**	$ -	$ -	
14	Ea	USDD	0	**G2 HDTV REMOTE** Module	**TVR**	$ -	$ -	
15	Ea	USDD	0	**G2 MESSAGE SIGN**, Digital LED (**GammaSign**)	**MS-G**	$ -	$ -	
15	Ea	USDD	1	**MESSAGE SIGN**, Digital LED (**BetaBrite**) (x1 already provided in 'Basic'System previously	**MS-B**	$ 324.00	Included Previously	
15	Ea	USDD	6	**MESSAGE SIGN**, Digital LED (**BetaBrite**) (Needed for this upgraded system in addition to x1 already provided in 'Basic' design proposed).	**MS-B**	$ 324.00	$ 1,944.00	
16	Ea	USDD	6	MS Adapter Plate, VESA 100	MS-ADPT-V100	$ 54.00	$ 324.00	
17	Ea	USDD	3	MS Tie-Straps (pair) - join two MSs	MS-ADPT-STRP	$ 24.00	$ 72.00	
18	Ea	USDD	0	MS Mount - Articulating, Std. reach	MS-MNT-ART-S	$ -	$ -	
19	Ea	USDD	3	MS Mount - Articulating, Long reach	MS-MNT-ART-L	$ 259.00	$ 777.00	
20	Ea	USDD	0	MS Mount - X2 Arm, Artic., Long	MS-MNT-ART-LX2	$ -	$ -	
21	Ea	USDD	0	**G2 DOUBLE MS KIT** (MR, 90-deg Mount, x2MS)	**MS-X2K**	$ -	$ -	
22	Ea	USDD	0	**G2 I/O REMOTE** w/ 8 In & 8 Out	**IOR**	$ -	$ -	
23	Ea	USDD	0	Turnout Timer, Count Up, 2.25"X	TOT	$ -	$ -	
24	Ea	USDD	0	Strobe Light / Red LED	STR	$ -	$ -	
25	Ea	USDD	0	**G2 Color Indicator Remote** - Up to 8 unique colors	**CIR**	$ -	$ -	
26	Ea	USDD	0	Push Button, Standard (Black)	PB-B	$ -	$ -	
27	Ea	USDD	0	Push Button, Emergency (Red)	PB-R	$ -	$ -	
28	Ea	Atlas	0	Audio Amplifier, External, Standard	AMP	$ -	$ -	
29	Ea	Bogn	11	Speaker-**APP**/Weatherized (**A2T**), Surface, 70v	SPK-W-SM	$ 252.00	$ 2,772.00	
30	Ea	Bogn	24	Speaker - Standard, Flush Mount, 8Ω/70v (S86)	SPK-STD-FM	$ 66.00	$ 1,584.00	
31	Ea	Bogn	0	Speaker - Surface Mount (MB), 8Ω/70v	SPK-STD-SM	$ -	$ -	
32	Ea	USDD	38	**G2 LED SPEAKER** - Flush Mount, 8Ω/70v	**SPK-LED-FM**	$ 270.00	$ 10,260.00	
33	Ea	USDD	0	**G2 LED SPEAKER** - Surface Mount (MB), 8Ω/70v	**SPK-LED-SM**	$ -	$ -	
34	Ea	TIC	1	Transformer, 8ohm to 70V, External	XFMR	$ 48.00	$ 48.00	
35	Ea	TBD	0	ATX UPS, Standard (listed seperately / Form B-1 / x2 Needed for this station)	UPS-STD	$ -	$ -	
36	Ea	USDD	0	UPS Extended Runtime Battery	UPS-EXT	$ -	$ -	

37	Ea	VAL	1	70-Volt Adapter Solution to tie new FSAS Output into existing amplified speakers (x1 already provided in 'Basic'System previously proposed).	MD-XFMR	$ 200.00	Included Previously	
38	Ea	USDD	1	2-Channel Line-Level Audio Mixing Solution to tie into existing (OFE) Miami-Dade Audio System (x1 already provided in 'Basic'System previously proposed).	MD-MXR	$ 150.00	Included Previously	
39	Ea	USDD	1	I/O Remote Audio Switching Panel to integrate with existing (OFE) Valcom Paging (x1 already provided in 'Basic'System previously proposed).	MD-RASP	$ 1,550.00	Included Previously	

STATION-LEVEL SERVICES

40	Ea	USDD	0	**Station Installation**	**ST-INST**	$ -	$ -	
41	Ea	USDD	0	**Station Remediation**	**ST-INST**	$ -	$ -	
42	Ea	USDD	0	**Station Installation Supervision**	**ST-IS**	$ -	$ -	
43	Ea	USDD	1	**Station Configuration & Start-Up**	**ST-SU**	$ 677.00	$ 677.00	
44	Ea	USDD	1	**Station Project Management**	**ST-PM**	$ 565.00	$ 565.00	
45	Ea	USDD	1	**Station Engineering / Design Services**	**ST-ES**	$ 226.00	$ 226.00	
46	Ea	USDD	1	**Station Documentation**	**ST-DM**	$ 34.00	$ 34.00	
47	Ea	USDD	0	**Station Training - User/Technician** via streamed online video with per-station license and participant registration/verification.	**TRA-UT-VID**	$ -	$ -	
48	Ea	USDD	0	**Station Training - User/Technician. On-Site @ Station.** 1 Hour, 1 Visit. (3 Units/Hours suggested to cover 3 shifts)	**TRA-UT-OS**	$ -	$ -	
49	Ea	USDD	0	**Training - Installation Contractor / USDD G2 Certification** (TBD - only needed if using non-certified contractor)	**TRA-IC**	$ -	$ -	
50	Ea	USDD	0	**Miscellaneous/TBD**	**MISC**	$ -	$ -	

NO-INSTALL FS12 UPGRADE OPTION	**Individual Station Equipment Subtotal**	$	24,083
	Individual Station Shipping	$	2,171
	INDIVIDUAL STATION GRAND TOTAL	$	**26,254**

INSTALLED FS25 UPGRADE OPTION

INSTALLED - ARFE (Retrofit) - Post RFP Requested Upgrades (to previously-proposed/included 'Basic' System).

Item	Unit	Mfr	Qty	Description	Part No.	Unit	Ext	
				PHOENIX G2 - STATION CONTROLLER (Required)				
				Control up to (8) peripherals				
1	Kit	USDD	1	**G2 ATX STATION CONTROLLER** (provided in 'Basic' System previously proposed).	**ATX**	$ 18,000.00	Included Previously	
2	Kit	USDD	0	Rack Mount Ears	ATX-E	N/C	N/C	
3	Kit	USDD	0	Base Plate	ATX-P	N/C	N/C	
				STATION CONTROLLER OPTIONS				
4	Kit	USDD	0	**ATX EXPANSION KIT**	**ATX-EXP**	$ -	$ -	
5	Kit	USDD	0	Rack Mount Ears	ATX-E	N/C	N/C	
6	Kit	USDD	0	Audio Extension Module	AUD-EXT	$ -	$ -	
7	Kit	USDD	0	Fiber LAN Modules (2)	FIB-LAN-KIT	$ -	$ -	
8	Ea	USDD	1	**G2 VOICEALERT** - (provided in 'Basic' System previously proposed).	**VA**	$ 834.00	Included Previously	
				PERIPHERAL OPTIONS				
9	Ea	USDD	0	**G2 ROOM REMOTE** Module	**RR**	$ -	$ -	
10	Ea	USDD	0	RR Trim Plate, for Flush-Mount	RR-TP	$ -	$ -	
11	Ea	USDD	0	RR Back-Box, for solid-wall flush-mounting	RR-BB	$ -	$ -	
12	Ea	USDD	1	**G2 MESSAGE REMOTE** Module	**MR**	$ 1,050.00	$ 1,050.00	
13	Ea	USDD	1	**G2 SIGN REMOTE** Module (x1 already provided in 'Basic'System previously proposed).	**SR**	$ 525.00	Included Previously	
13	Ea	USDD	0	**G2 SIGN REMOTE** Module (Needed for this upgraded system in addition to x1 already provided in 'Basic' design proposed).	**SR**	$ -	$ -	
14	Ea	USDD	0	**G2 HDTV REMOTE** Module	**TVR**	$ -	$ -	
15	Ea	USDD	0	**G2 MESSAGE SIGN**, Digital LED (**GammaSign**)	**MS-G**	$ -	$ -	
15	Ea	USDD	1	**MESSAGE SIGN**, Digital LED (**BetaBrite**) (x1 already provided in 'Basic'System previously	**MS-B**	$ 324.00	Included Previously	
15	Ea	USDD	2	**MESSAGE SIGN**, Digital LED (**BetaBrite**) (Needed for this upgraded system in addition to x1 already provided in 'Basic' design proposed).	**MS-B**	$ 324.00	$ 648.00	
16	Ea	USDD	2	MS Adapter Plate, VESA 100	MS-ADPT-V100	$ 54.00	$ 108.00	
17	Ea	USDD	1	MS Tie-Straps (pair) - join two MSs	MS-ADPT-STRP	$ 24.00	$ 24.00	
18	Ea	USDD	0	MS Mount - Articulating, Std. reach	MS-MNT-ART-S	$ -	$ -	
19	Ea	USDD	1	MS Mount - Articulating, Long reach	MS-MNT-ART-L	$ 259.00	$ 259.00	
20	Ea	USDD	0	MS Mount - X2 Arm, Artic., Long	MS-MNT-ART-LX2	$ -	$ -	
21	Ea	USDD	0	**G2 DOUBLE MS KIT** (MR, 90-deg Mount, x2MS)	**MS-X2K**	$ -	$ -	
22	Ea	USDD	0	**G2 I/O REMOTE** w/ 8 In & 8 Out	**IOR**	$ -	$ -	
23	Ea	USDD	0	Turnout Timer, Count Up, 2.25"X	TOT	$ -	$ -	
24	Ea	USDD	0	Strobe Light / Red LED	STR	$ -	$ -	
25	Ea	USDD	0	**G2 Color Indicator Remote** - Up to 8 unique colors	**CIR**	$ -	$ -	
26	Ea	USDD	0	Push Button, Standard (Black)	PB-B	$ -	$ -	
27	Ea	USDD	0	Push Button, Emergency (Red)	PB-R	$ -	$ -	
28	Ea	Atlas	0	Audio Amplifier, External, Standard	AMP	$ -	$ -	
29	Ea	Bogn	7	Speaker-**APP**/Weatherized (**A2T**), Surface, 70v	SPK-W-SM	$ 252.00	$ 1,764.00	
30	Ea	Bogn	14	Speaker - Standard, Flush Mount, 8Ω/70v (586)	SPK-STD-FM	$ 66.00	$ 924.00	
31	Ea	Bogn	0	Speaker - Surface Mount (**MB**), 8Ω/70v	SPK-STD-SM	$ -	$ -	
32	Ea	USDD	12	**G2 LED SPEAKER** - Flush Mount, 8Ω/70v	**SPK-LED-FM**	$ 270.00	$ 3,240.00	
33	Ea	USDD	0	**G2 LED SPEAKER** - Surface Mount (**MB**), 8Ω/70v	**SPK-LED-SM**	$ -	$ -	
34	Ea	TIC	0	Transformer, 8ohm to 70V, External	XFMR	$ -	$ -	
35	Ea	TBD	0	ATX UPS, Standard (listed seperately / Form B-1 / x2 Needed for this station)	UPS-STD	$ -	$ -	
36	Ea	USDD	0	UPS Extended Runtime Battery	UPS-EXT	$ -	$ -	

37	Ea	VAL	1	70-Volt Adapter Solution to tie new FSAS Output into existing amplified speakers (x1 already provided in 'Basic'System previously proposed).	MD-XFMR	$ 200.00	Included Previously	
38	Ea	USDD	1	2-Channel Line-Level Audio Mixing Solution to tie into existing (OFE) Miami-Dade Audio System (x1 already provided in 'Basic'System previously proposed).	MD-MXR	$ 150.00	Included Previously	
39	Ea	USDD	1	I/O Remote Audio Switching Panel to integrate with existing (OFE) Valcom Paging (x1 already provided in 'Basic'System previously proposed).	MD-RASP	$ 1,550.00	Included Previously	

STATION-LEVEL SERVICES

40	Ea	USDD	1	**Station Installation** (Installation of Upgrades Only - 'Basic' System Installation already included previously)	**ST-INST**	$ 11,544.00	$ 11,544.00	
41	Ea	USDD	0	**Station Remediation**	**ST-INST**	$ -	$ -	
42	Ea	USDD	0	**Station Installation Supervision**	**ST-IS**	$ -	$ -	
43	Ea	USDD	1	**Station Configuration & Start-Up**	**ST-SU**	$ 241.00	$ 241.00	
44	Ea	USDD	1	**Station Project Management**	**ST-PM**	$ 200.00	$ 200.00	
45	Ea	USDD	1	**Station Engineering / Design Services**	**ST-ES**	$ 80.00	$ 80.00	
46	Ea	USDD	1	**Station Documentation**	**ST-DM**	$ 12.00	$ 12.00	
47	Ea	USDD	0	**Station Training - User/Technician** via streamed online video with per-station license and participant registration/verification.	**TRA-UT-VID**	$ -	$ -	
48	Ea	USDD	0	**Station Training - User/Technician. On-Site @ Station.** 1 Hour, 1 Visit. (3 Units/Hours suggested to cover 3 shifts)	**TRA-UT-OS**	$ -	$ -	
49	Ea	USDD	0	**Training - Installation Contractor / USDD G2 Certification** (TBD - only needed if using non-certified contractor)	**TRA-IC**	$ -	$ -	
50	Ea	USDD	0	**Miscellaneous/TBD**	**MISC**	$ -	$ -	

INSTALLED FS26 UPGRADE OPTION	**Individual Station Equipment Subtotal**	$	20,094
	Individual Station Shipping	$	1,100
	INDIVIDUAL STATION GRAND TOTAL	$	**21,194**

NO-INSTALL FS25 UPGRADE OPTION

NO INSTALL - ARFF (Retrofit) - Post-RFP Requested Upgrades (to previously-proposed/included 'Basic' System)

Item	Unit	Mfr	Qty	Description	Part No.	Unit	Ext	
				PHOENIX G2 - STATION CONTROLLER (Required)				
				Control up to (8) peripherals				
1	Kit	USDD	1	**G2 ATX STATION CONTROLLER** (provided in 'Basic' System previously proposed).	**ATX**	$ 18,000.00	Included Previously	
2	Kit	USDD	0	Rack Mount Ears	ATX-E	N/C	N/C	
3	Kit	USDD	0	Base Plate	ATX-P	N/C	N/C	
				STATION CONTROLLER OPTIONS				
4	Kit	USDD	0	**ATX EXPANSION KIT**	**ATX-EXP**	$ -	$ -	
5	Kit	USDD	0	Rack Mount Ears	ATX-E	N/C	N/C	
6	Kit	USDD	0	Audio Extension Module	AUD-EXT	$ -	$ -	
7	Kit	USDD	0	Fiber LAN Modules (2)	FIB-LAN-KIT	$ -	$ -	
8	Ea	USDD	1	**G2 VOICEALERT** - (provided in 'Basic' System previously proposed).	**VA**	$ 834.00	Included Previously	
				PERIPHERAL OPTIONS				
9	Ea	USDD	0	**G2 ROOM REMOTE** Module	**RR**	$ -	$ -	
10	Ea	USDD	0	RR Trim Plate, for Flush-Mount	RR-TP	$ -	$ -	
11	Ea	USDD	0	RR Back-Box, for solid-wall flush-mounting	RR-BB	$ -	$ -	
12	Ea	USDD	1	**G2 MESSAGE REMOTE** Module	**MR**	$ 1,050.00	$ 1,050.00	
13	Ea	USDD	1	**G2 SIGN REMOTE** Module (x1 already provided in 'Basic'System previously proposed).	**SR**	$ 525.00	Included Previously	
13	Ea	USDD	0	**G2 SIGN REMOTE** Module (Needed for this upgraded system in addition to x1 already provided in 'Basic' design proposed).	**SR**	$ -	$ -	
14	Ea	USDD	0	**G2 HDTV REMOTE** Module	**TVR**	$ -	$ -	
15	Ea	USDD	0	**G2 MESSAGE SIGN**, Digital LED (**GammaSign**)	**MS-G**	$ -	$ -	
15	Ea	USDD	1	**MESSAGE SIGN**, Digital LED (**BetaBrite**) (x1 already provided in 'Basic'System previously	**MS-B**	$ 324.00	Included Previously	
15	Ea	USDD	2	**MESSAGE SIGN**, Digital LED (**BetaBrite**) (Needed for this upgraded system in addition to x1 already provided in 'Basic' design proposed).	**MS-B**	$ 324.00	$ 648.00	
16	Ea	USDD	2	MS Adapter Plate, VESA 100	MS-ADPT-V100	$ 54.00	$ 108.00	
17	Ea	USDD	1	MS Tie-Straps (pair) - join two MSs	MS-ADPT-STRP	$ 24.00	$ 24.00	
18	Ea	USDD	0	MS Mount - Articulating, Std. reach	MS-MNT-ART-S	$ -	$ -	
19	Ea	USDD	1	MS Mount - Articulating, Long reach	MS-MNT-ART-L	$ 259.00	$ 259.00	
20	Ea	USDD	0	MS Mount - X2 Arm, Artic., Long	MS-MNT-ART-LX2	$ -	$ -	
21	Ea	USDD	0	**G2 DOUBLE MS KIT** (MR, 90-deg Mount, x2MS)	**MS-X2K**	$ -	$ -	
22	Ea	USDD	0	**G2 I/O REMOTE** w/ 8 In & 8 Out	**IOR**	$ -	$ -	
23	Ea	USDD	0	Turnout Timer, Count Up, 2.25"X	TOT	$ -	$ -	
24	Ea	USDD	0	Strobe Light / Red LED	STR	$ -	$ -	
25	Ea	USDD	0	**G2 Color Indicator Remote** - Up to 8 unique colors	**CIR**	$ -	$ -	
26	Ea	USDD	0	Push Button, Standard (Black)	PB-B	$ -	$ -	
27	Ea	USDD	0	Push Button, Emergency (Red)	PB-R	$ -	$ -	
28	Ea	Atlas	0	Audio Amplifier, External, Standard	AMP	$ -	$ -	
29	Ea	Bogn	7	Speaker-**APP**/Weatherized (**A2T**), Surface, 70v	SPK-W-SM	$ 252.00	$ 1,764.00	
30	Ea	Bogn	14	Speaker - Standard, Flush Mount, 8Ω/70v (S86)	SPK-STD-FM	$ 66.00	$ 924.00	
31	Ea	Bogn	0	Speaker - Surface Mount (MB), 8Ω/70v	SPK-STD-SM	$ -	$ -	
32	Ea	USDD	12	**G2 LED SPEAKER** - Flush Mount, 8Ω/70v	**SPK-LED-FM**	$ 270.00	$ 3,240.00	
33	Ea	USDD	0	**G2 LED SPEAKER** - Surface Mount (**MB**), 8Ω/70v	**SPK-LED-SM**	$ -	$ -	
34	Ea	TIC	0	Transformer, 8ohm to 70V, External	XFMR	$ -	$ -	
35	Ea	TBD	0	ATX UPS, Standard (listed seperately / Form B-1 / x2 Needed for this station)	UPS-STD	$ -	$ -	
36	Ea	USDD	0	UPS Extended Runtime Battery	UPS-EXT	$ -	$ -	

37	Ea	VAL	1	70-Volt Adapter Solution to tie new FSAS Output into existing amplified speakers (x1 already provided in 'Basic'System previously proposed).	MD-XFMR	$ 200.00	Included Previously	
38	Ea	USDD	1	2-Channel Line-Level Audio Mixing Solution to tie into existing (OFE) Miami-Dade Audio System (x1 already provided in 'Basic'System previously proposed).	MD-MXR	$ 150.00	Included Previously	
39	Ea	USDD	1	I/O Remote Audio Switching Panel to integrate with existing (OFE) Valcom Paging (x1 already provided in 'Basic'System previously proposed).	MD-RASP	$ 1,550.00	Included Previously	

STATION-LEVEL SERVICES

40	Ea	USDD	0	**Station Installation** (Installation of Upgrades Only - 'Basic' System Installation already included previously)	**ST-INST**	$ -	$ -	
41	Ea	USDD	0	**Station Remediation**	**ST-INST**	$ -	$ -	
42	Ea	USDD	0	**Station Installation Supervision**	**ST-IS**	$ -	$ -	
43	Ea	USDD	1	**Station Configuration & Start-Up**	**ST-SU**	$ 241.00	$ 241.00	
44	Ea	USDD	1	**Station Project Management**	**ST-PM**	$ 200.00	$ 200.00	
45	Ea	USDD	1	**Station Engineering / Design Services**	**ST-ES**	$ 80.00	$ 80.00	
46	Ea	USDD	1	**Station Documentation**	**ST-DM**	$ 12.00	$ 12.00	
47	Ea	USDD	0	**Station Training - User/Technician** via streamed online video with per-station license and participant registration/verification.	**TRA-UT-VID**	$ -	$ -	
48	Ea	USDD	0	**Station Training - User/Technician. On-Site @ Station.** 1 Hour, 1 Visit. (3 Units/Hours suggested to cover 3 shifts)	**TRA-UT-OS**	$ -	$ -	
49	Ea	USDD	0	**Training - Installation Contractor / USDD G2 Certification** (TBD - only needed if using non-certified contractor)	**TRA-IC**	$ -	$ -	
50	Ea	USDD	0	**Miscellaneous/TBD**	**MISC**	$ -	$ -	

NO-INSTALL FS25 UPGRADE OPTION	**Individual Station Equipment Subtotal**	$	8,550
	Individual Station Shipping	$	1,100
	INDIVIDUAL STATION GRAND TOTAL	$	**9,650**

INSTALLED FS59 UPGRADE OPTION

INSTALLED - ARFF (Retrofit) - Post-RFP Requested Upgrades (to previously proposed/included 'Basic' System)

Item	Unit	Mfr	Qty	Description	Part No.	Unit	Ext	
				PHOENIX G2 - STATION CONTROLLER (Required)				
				Control up to (8) peripherals				
1	Kit	USDD	1	**G2 ATX STATION CONTROLLER** (provided in 'Basic' System previously proposed).	**ATX**	$ 18,000.00	Included Previously	
2	Kit	USDD	0	Rack Mount Ears	ATX-E	N/C	N/C	
3	Kit	USDD	0	Base Plate	ATX-P	N/C	N/C	
				STATION CONTROLLER OPTIONS				
4	Kit	USDD	0	**ATX EXPANSION KIT**	**ATX-EXP**	$ -	$ -	
5	Kit	USDD	0	Rack Mount Ears	ATX-E	N/C	N/C	
6	Kit	USDD	0	Audio Extension Module	AUD-EXT	$ -	$ -	
7	Kit	USDD	0	Fiber LAN Modules (2)	FIB-LAN-KIT	$ -	$ -	
8	Ea	USDD	1	**G2 VOICEALERT** - (provided in 'Basic' System previously proposed).	**VA**	$ 834.00	Included Previously	
				PERIPHERAL OPTIONS				
9	Ea	USDD	2	**G2 ROOM REMOTE** Module	**RR**	$ 1,650.00	$ 3,300.00	
10	Ea	USDD	0	RR Trim Plate, for Flush-Mount	RR-TP	$ -	$ -	
11	Ea	USDD	0	RR Back-Box, for solid-wall flush-mounting	RR-BB	$ -	$ -	
12	Ea	USDD	2	**G2 MESSAGE REMOTE** Module	**MR**	$ 1,050.00	$ 2,100.00	
13	Ea	USDD	1	**G2 SIGN REMOTE** Module (x1 already provided in 'Basic'System previously proposed).	**SR**	$ 525.00	Included Previously	
13	Ea	USDD	0	**G2 SIGN REMOTE** Module (Needed for this upgraded system in addition to x1 already provided in 'Basic' design proposed).	**SR**	$ -	$ -	
14	Ea	USDD	0	**G2 HDTV REMOTE** Module	**TVR**	$ -	$ -	
15	Ea	USDD	0	**G2 MESSAGE SIGN**, Digital LED (**GammaSign**)	**MS-G**	$ -	$ -	
15	Ea	USDD	1	**MESSAGE SIGN**, Digital LED (**BetaBrite**) (x1 already provided in 'Basic'System previously	**MS-B**	$ 324.00	Included Previously	
15	Ea	USDD	4	**MESSAGE SIGN**, Digital LED (**BetaBrite**) (Needed for this upgraded system in addition to x1 already provided in 'Basic' design proposed).	**MS-B**	$ 324.00	$ 1,296.00	
16	Ea	USDD	4	MS Adapter Plate, VESA 100	MS-ADPT-V100	$ 54.00	$ 216.00	
17	Ea	USDD	2	MS Tie-Straps (pair) - join two MSs	MS-ADPT-STRP	$ 24.00	$ 48.00	
18	Ea	USDD	0	MS Mount - Articulating, Std. reach	MS-MNT-ART-S	$ -	$ -	
19	Ea	USDD	2	MS Mount - Articulating, Long reach	MS-MNT-ART-L	$ 259.00	$ 518.00	
20	Ea	USDD	0	MS Mount - X2 Arm, Artic., Long	MS-MNT-ART-LX2	$ -	$ -	
21	Ea	USDD	0	**G2 DOUBLE MS KIT** (MR, 90-deg Mount, x2MS)	**MS-X2K**	$ -	$ -	
22	Ea	USDD	0	**G2 I/O REMOTE** w/ 8 In & 8 Out	**IOR**	$ -	$ -	
23	Ea	USDD	0	Turnout Timer, Count Up, 2.25"X	TOT	$ -	$ -	
24	Ea	USDD	0	Strobe Light / Red LED	STR	$ -	$ -	
25	Ea	USDD	0	**G2 Color Indicator Remote** - Up to 8 unique colors	**CIR**	$ -	$ -	
26	Ea	USDD	0	Push Button, Standard (Black)	PB-B	$ -	$ -	
27	Ea	USDD	0	Push Button, Emergency (Red)	PB-R	$ -	$ -	
28	Ea	Atlas	0	Audio Amplifier, External, Standard	AMP	$ -	$ -	
29	Ea	Bogn	4	Speaker-**APP**/Weatherized (**A2T**), Surface, 70v	SPK-W-SM	$ 252.00	$ 1,008.00	
30	Ea	Bogn	24	Speaker - Standard, Flush Mount, 8Ω/70v (**S86**)	SPK-STD-FM	$ 66.00	$ 1,584.00	
31	Ea	Bogn	0	Speaker - Surface Mount (**MB**), 8Ω/70v	SPK-STD-SM	$ -	$ -	
32	Ea	USDD	29	**G2 LED SPEAKER** - Flush Mount, 8Ω/70v	**SPK-LED-FM**	$ 270.00	$ 7,830.00	
33	Ea	USDD	0	**G2 LED SPEAKER** - Surface Mount (**MB**), 8Ω/70v	**SPK-LED-SM**	$ -	$ -	
34	Ea	TIC	2	Transformer, 8ohm to 70V, External	XFMR	$ 48.00	$ 96.00	
35	Ea	TBD	0	ATX UPS, Standard (listed seperately / Form B-1 / x2 Needed for this station)	UPS-STD	$ -	$ -	
36	Ea	USDD	0	UPS Extended Runtime Battery	UPS-EXT	$ -	$ -	

37	Ea	VAL	1	70-Volt Adapter Solution to tie new FSAS Output into existing amplified speakers (x1 already provided in 'Basic'System previously proposed).	MD-XFMR	$ 200.00	Included Previously	
38	Ea	USDD	1	2-Channel Line-Level Audio Mixing Solution to tie into existing (OFE) Miami-Dade Audio System (x1 already provided in 'Basic'System previously proposed).	MD-MXR	$ 150.00	Included Previously	
39	Ea	USDD	1	I/O Remote Audio Switching Panel to integrate with existing (OFE) Valcom Paging (x1 already provided in 'Basic'System previously proposed).	MD-RASP	$ 1,550.00	Included Previously	

STATION-LEVEL SERVICES

40	Ea	USDD	1	**Station Installation** (Installation of Upgrades Only - 'Basic' System Installation already included previously)	**ST-INST**	$ 19,436.00	$ 19,436.00	
41	Ea	USDD	0	**Station Remediation**	**ST-INST**	$ -	$ -	
42	Ea	USDD	0	**Station Installation Supervision**	**ST-IS**	$ -	$ -	
43	Ea	USDD	1	**Station Configuration & Start-Up**	**ST-SU**	$ 540.00	$ 540.00	
44	Ea	USDD	1	**Station Project Management**	**ST-PM**	$ 450.00	$ 450.00	
45	Ea	USDD	1	**Station Engineering / Design Services**	**ST-ES**	$ 180.00	$ 180.00	
46	Ea	USDD	1	**Station Documentation**	**ST-DM**	$ 27.00	$ 27.00	
47	Ea	USDD	0	**Station Training - User/Technician** via streamed online video with per-station license and participant registration/verification.	**TRA-UT-VID**	$ -	$ -	
48	Ea	USDD	0	**Station Training - User/Technician. On-Site @ Station.** 1 Hour, 1 Visit. (3 Units/Hours suggested to cover 3 shifts)	**TRA-UT-OS**	$ -	$ -	
49	Ea	USDD	0	**Training - Installation Contractor / USDD G2 Certification** (TBD - only needed if using non-certified contractor)	**TRA-IC**	$ -	$ -	
50	Ea	USDD	0	**Miscellaneous/TBD**	**MISC**	$ -	$ -	

INSTALLED FS59 UPGRADE OPTION	**Individual Station Equipment Subtotal**	$	38,629
	Individual Station Shipping	$	1,762
	INDIVIDUAL STATION GRAND TOTAL	$	**40,391**

NO-INSTALL FS59 UPGRADE OPTION

NO INSTALL - ARFE (Retrofit) - Post-RFP Requested Upgrades (to previously-proposed/included 'Basic' System)

Item	Unit	Mfr	Qty	Description	Part No.	Unit	Ext	

PHOENIX G2 - STATION CONTROLLER (Required)

Control up to (8) peripherals

1	Kit	USDD	1	**G2 ATX STATION CONTROLLER** (provided in 'Basic' System previously proposed).	**ATX**	$ 18,000.00	Included Previously	
2	Kit	USDD	0	Rack Mount Ears	ATX-E	N/C	N/C	
3	Kit	USDD	0	Base Plate	ATX-P	N/C	N/C	

STATION CONTROLLER OPTIONS

4	Kit	USDD	0	**ATX EXPANSION KIT**	**ATX-EXP**	$ -	$ -	
5	Kit	USDD	0	Rack Mount Ears	ATX-E	N/C	N/C	
6	Kit	USDD	0	Audio Extension Module	AUD-EXT	$ -	$ -	
7	Kit	USDD	0	Fiber LAN Modules (2)	FIB-LAN-KIT	$ -	$ -	
8	Ea	USDD	1	**G2 VOICEALERT** - (provided in 'Basic' System previously proposed).	**VA**	$ 834.00	Included Previously	

PERIPHERAL OPTIONS

9	Ea	USDD	2	**G2 ROOM REMOTE** Module	**RR**	$ 1,650.00	$ 3,300.00	
10	Ea	USDD	0	RR Trim Plate, for Flush-Mount	RR-TP	$ -	$ -	
11	Ea	USDD	0	RR Back-Box, for solid-wall flush-mounting	RR-BB	$ -	$ -	
12	Ea	USDD	2	**G2 MESSAGE REMOTE** Module	**MR**	$ 1,050.00	$ 2,100.00	
13	Ea	USDD	1	**G2 SIGN REMOTE** Module (x1 already provided in 'Basic'System previously proposed).	**SR**	$ 525.00	Included Previously	
13	Ea	USDD	0	**G2 SIGN REMOTE** Module (Needed for this upgraded system in addition to x1 already provided in 'Basic' design proposed).	**SR**	$ -	$ -	
14	Ea	USDD	0	**G2 HDTV REMOTE** Module	**TVR**	$ -	$ -	
15	Ea	USDD	0	**G2 MESSAGE SIGN**, Digital LED (**GammaSign**)	**MS-G**	$ -	$ -	
15	Ea	USDD	1	**MESSAGE SIGN**, Digital LED (**BetaBrite**) (x1 already provided in 'Basic'System previously	**MS-B**	$ 324.00	Included Previously	
15	Ea	USDD	4	**MESSAGE SIGN**, Digital LED (**BetaBrite**) (Needed for this upgraded system in addition to x1 already provided in 'Basic' design proposed).	**MS-B**	$ 324.00	$ 1,296.00	
16	Ea	USDD	4	MS Adapter Plate, VESA 100	MS-ADPT-V100	$ 54.00	$ 216.00	
17	Ea	USDD	2	MS Tie-Straps (pair) - join two MSs	MS-ADPT-STRP	$ 24.00	$ 48.00	
18	Ea	USDD	0	MS Mount - Articulating, Std. reach	MS-MNT-ART-S	$ -	$ -	
19	Ea	USDD	2	MS Mount - Articulating, Long reach	MS-MNT-ART-L	$ 259.00	$ 518.00	
20	Ea	USDD	0	MS Mount - X2 Arm, Artic., Long	MS-MNT-ART-LX2	$ -	$ -	
21	Ea	USDD	0	**G2 DOUBLE MS KIT** (MR, 90-deg Mount, x2MS)	**MS-X2K**	$ -	$ -	
22	Ea	USDD	0	**G2 I/O REMOTE** w/ 8 In & 8 Out	**IOR**	$ -	$ -	
23	Ea	USDD	0	Turnout Timer, Count Up, 2.25"X	TOT	$ -	$ -	
24	Ea	USDD	0	Strobe Light / Red LED	STR	$ -	$ -	
25	Ea	USDD	0	**G2 Color Indicator Remote** - Up to 8 unique colors	**CIR**	$ -	$ -	
26	Ea	USDD	0	Push Button, Standard (Black)	PB-B	$ -	$ -	
27	Ea	USDD	0	Push Button, Emergency (Red)	PB-R	$ -	$ -	
28	Ea	Atlas	0	Audio Amplifier, External, Standard	AMP	$ -	$ -	
29	Ea	Bogn	4	Speaker-**APP**/Weatherized (**A2T**), Surface, 70v	SPK-W-SM	$ 252.00	$ 1,008.00	
30	Ea	Bogn	24	Speaker - Standard, Flush Mount, 8Ω/70v (**S86**)	SPK-STD-FM	$ 66.00	$ 1,584.00	
31	Ea	Bogn	0	Speaker - Surface Mount (**MB**), 8Ω/70v	SPK-STD-SM	$ -	$ -	
32	Ea	USDD	29	**G2 LED SPEAKER** - Flush Mount, 8Ω/70v	**SPK-LED-FM**	$ 270.00	$ 7,830.00	
33	Ea	USDD	0	**G2 LED SPEAKER** - Surface Mount (**MB**), 8Ω/70v	**SPK-LED-SM**	$ -	$ -	
34	Ea	TIC	2	Transformer, 8ohm to 70V, External	XFMR	$ 48.00	$ 96.00	
35	Ea	TBD	0	ATX UPS, Standard (listed seperately / Form B-1 / x2 Needed for this station)	UPS-STD	$ -	$ -	
36	Ea	USDD	0	UPS Extended Runtime Battery	UPS-EXT	$ -	$ -	

37	Ea	VAL	1	70-Volt Adapter Solution to tie new FSAS Output into existing amplified speakers (x1 already provided in 'Basic'System previously proposed).	MD-XFMR	$ 200.00	Included Previously	
38	Ea	USDD	1	2-Channel Line-Level Audio Mixing Solution to tie into existing (OFE) Miami-Dade Audio System (x1 already provided in 'Basic'System previously proposed).	MD-MXR	$ 150.00	Included Previously	
39	Ea	USDD	1	I/O Remote Audio Switching Panel to integrate with existing (OFE) Valcom Paging (x1 already provided in 'Basic'System previously proposed).	MD-RASP	$ 1,550.00	Included Previously	

STATION-LEVEL SERVICES

40	Ea	USDD	0	**Station Installation** (Installation of Upgrades Only - 'Basic' System Installation already included previously)	**ST-INST**	$ -	$ -	
41	Ea	USDD	0	**Station Remediation**	**ST-INST**	$ -	$ -	
42	Ea	USDD	0	**Station Installation Supervision**	**ST-IS**	$ -	$ -	
43	Ea	USDD	1	**Station Configuration & Start-Up**	**ST-SU**	$ 540.00	$ 540.00	
44	Ea	USDD	1	**Station Project Management**	**ST-PM**	$ 450.00	$ 450.00	
45	Ea	USDD	1	**Station Engineering / Design Services**	**ST-ES**	$ 180.00	$ 180.00	
46	Ea	USDD	1	**Station Documentation**	**ST-DM**	$ 27.00	$ 27.00	
47	Ea	USDD	0	**Station Training - User/Technician** via streamed online video with per-station license and participant registration/verification.	**TRA-UT-VID**	$ -	$ -	
48	Ea	USDD	0	**Station Training - User/Technician. On-Site @ Station.** 1 Hour, 1 Visit. (3 Units/Hours suggested to cover 3 shifts)	**TRA-UT-OS**	$ -	$ -	
49	Ea	USDD	0	**Training - Installation Contractor / USDD G2 Certification** (TBD - only needed if using non-certified contractor)	**TRA-IC**	$ -	$ -	
50	Ea	USDD	0	**Miscellaneous/TBD**	**MISC**	$ -	$ -	

NO-INSTALL FS59 UPGRADE OPTION	**Individual Station Equipment Subtotal**	$	19,193
	Individual Station Shipping	$	1,762
	INDIVIDUAL STATION GRAND TOTAL	$	20,955

INSTALLED FS64 OPTION

INSTALLED - This NEW station was requested (Post-RFP) to be an ADD/ALT Option, and has not been included (with Basic System design) in any previous quotation or solicitation response.

Item	Unit	Mfr	Qty	Description	Part No.	Unit	Ext	
				PHOENIX G2 - STATION CONTROLLER (Required)				
				Control up to (8) peripherals				
1	Kit	USDD	1	**G2 ATX STATION CONTROLLER**	**ATX**	$ 18,000.00	$ 18,000.00	
2	Kit	USDD	0	Rack Mount Ears	ATX-E	N/C	N/C	
3	Kit	USDD	0	Base Plate	ATX-P	N/C	N/C	
				STATION CONTROLLER OPTIONS				
4	Kit	USDD	1	**ATX EXPANSION KIT**	**ATX-EXP**	$ 5,994.00	$ 5,994.00	
5	Kit	USDD	0	Rack Mount Ears	ATX-E	N/C	N/C	
6	Kit	USDD	0	Audio Extension Module	AUD-EXT	$ -	$ -	
7	Kit	USDD	0	Fiber LAN Modules (2)	FIB-LAN-KIT	$ -	$ -	
8	Ea	USDD	1	**G2 VOICEALERT** - (One Time) Single Station License	**VA**	$ 834.00	$ 834.00	
				PERIPHERAL OPTIONS				
9	Ea	USDD	4	**G2 ROOM REMOTE** Module	**RR**	$ 1,650.00	$ 6,600.00	
10	Ea	USDD	0	RR Trim Plate, for Flush-Mount	RR-TP	$ -	$ -	
11	Ea	USDD	0	RR Back-Box, for solid-wall flush-mounting	RR-BB	$ -	$ -	
12	Ea	USDD	3	**G2 MESSAGE REMOTE** Module	**MR**	$ 1,050.00	$ 3,150.00	
13	Ea	USDD	3	**G2 SIGN REMOTE** Module	**SR**	$ 525.00	$ 1,575.00	
14	Ea	USDD	0	**G2 HDTV REMOTE** Module	**TVR**	$ -	$ -	
15	Ea	USDD	0	**G2 MESSAGE SIGN**, Digital LED (**GammaSign**)	**MS-G**	$ -	$ -	
15	Ea	USDD	8	**MESSAGE SIGN**, Digital LED (**BetaBrite**)	**MS-B**	$ 324.00	$ 2,592.00	
16	Ea	USDD	0	MS Adapter Plate, VESA 100	MS-ADPT-V100	$ -	$ -	
17	Ea	USDD	0	MS Tie-Straps (pair) - join two MSs	MS-ADPT-STRP	$ -	$ -	
18	Ea	USDD	0	MS Mount - Articulating, Std. reach	MS-MNT-ART-S	$ -	$ -	
19	Ea	USDD	0	MS Mount - Articulating, Long reach	MS-MNT-ART-L	$ -	$ -	
20	Ea	USDD	0	MS Mount - X2 Arm, Artic., Long	MS-MNT-ART-LX2	$ -	$ -	
21	Ea	USDD	0	**G2 DOUBLE MS KIT** (MR, 90-deg Mount, x2MS)	**MS-X2K**	$ -	$ -	
22	Ea	USDD	0	**G2 I/O REMOTE** w/ 8 In & 8 Out	**IOR**	$ -	$ -	
23	Ea	USDD	0	Turnout Timer, Count Up, 2.25"X	TOT	$ -	$ -	
24	Ea	USDD	1	Strobe Light / Red LED	STR	$ 450.00	$ 450.00	
25	Ea	USDD	0	**G2 Color Indicator Remote** - Up to 8 unique colors	**CIR**	$ -	$ -	
26	Ea	USDD	0	Push Button, Standard (Black)	PB-B	$ -	$ -	
27	Ea	USDD	0	Push Button, Emergency (Red)	PB-R	$ -	$ -	
28	Ea	Atlas	1	Audio Amplifier, External, Standard	AMP	$ 888.00	$ 888.00	
29	Ea	Bogn	9	Speaker-**APP**/Weatherized (**A2T**), Surface, 70v	SPK-W-SM	$ 252.00	$ 2,268.00	
30	Ea	Bogn	10	Speaker - Standard, Flush Mount, 8Ω/70v (**S86**)	SPK-STD-FM	$ 66.00	$ 660.00	
31	Ea	Bogn	0	Speaker - Surface Mount (**MB**), 8Ω/70v	SPK-STD-SM	$ -	$ -	
32	Ea	USDD	25	**G2 LED SPEAKER** - Flush Mount, 8Ω/70v	**SPK-LED-FM**	$ 270.00	$ 6,750.00	
33	Ea	USDD	0	**G2 LED SPEAKER** - Surface Mount (**MB**), 8Ω/70v	**SPK-LED-SM**	$ -	$ -	
34	Ea	TIC	5	Transformer, 8ohm to 70V, External	XFMR	$ 48.00	$ 240.00	
35	Ea	TBD	0	ATX UPS, Standard (listed seperately / Form B-1 / x2 Needed for this station)	UPS-STD	$ -	$ -	
36	Ea	USDD	0	UPS Extended Runtime Battery	UPS-EXT	$ -	$ -	
37	Ea	VAL	0	70-Volt Adapter Solution to tie new FSAS Output into existing amplified speakers	MD-XFMR	$ -	$ -	
38	Ea	USDD	0	2-Channel Line-Level Audio Mixing Solution to tie into existing (OFE) Miami-Dade Audio System	MD-MXR	$ -	$ -	
39	Ea	USDD	0	I/O Remote Audio Switching Panel to integrate with existing (OFE) Valcom Paging	MD-RASP	$ -	$ -	
				STATION-LEVEL SERVICES				
40	Ea	USDD	1	**Station Installation**	**ST-INST**	$ 21,000.00	$ 21,000.00	
41	Ea	USDD	0	**Station Remediation**	**ST-INST**	$ -	$ -	

42	Ea	USDD	0	**Station Installation Supervision**	**ST-IS**	$	-	$ -	
43	Ea	USDD	1	**Station Configuration & Start-Up**	**ST-SU**	$	1,500.00	$ 1,500.00	
44	Ea	USDD	1	**Station Project Management**	**ST-PM**	$	1,250.00	$ 1,250.00	
45	Ea	USDD	1	**Station Engineering / Design Services**	**ST-ES**	$	500.00	$ 500.00	
46	Ea	USDD	1	**Station Documentation**	**ST-DM**	$	75.00	$ 75.00	
47	Ea	USDD	0	**Station Training - User/Technician** via streamed online video with per-station license and participant registration/verification.	**TRA-UT-VID**	$	-	$ -	
48	Ea	USDD	0	**Station Training - User/Technician. On-Site @ Station.** 1 Hour, 1 Visit. (3 Units/Hours suggested to cover 3 shifts)	**TRA-UT-OS**	$	-	$ -	
49	Ea	USDD	0	**Training - Installation Contractor / USDD G2 Certification** (TBD - only needed if using non-certified contractor)	**TRA-IC**	$	-	$ -	
50	Ea	USDD	0	**Miscellaneous/TBD**	**MISC**	$	-	$ -	

INSTALLED FS64 OPTION	**Individual Station Equipment Subtotal**	$	74,326
	Individual Station Shipping	$	1,745
	INDIVIDUAL STATION GRAND TOTAL	$	**76,071**

NO-INSTALL FS64 OPTION

NO-INSTALL - This NEW station was requested (Post-RFP) to be an ADD/ALT Option, and has not been included (with "Basic" System design) in any previous quotation or solicitation response.

Item	Unit	Mfr	Qty	Description	Part No.	Unit	Ext	
				PHOENIX G2 - STATION CONTROLLER (Required)				
				Control up to (8) peripherals				
1	Kit	USDD	1	**G2 ATX STATION CONTROLLER**	**ATX**	$ 18,000.00	$ 18,000.00	
2	Kit	USDD	0	Rack Mount Ears	ATX-E	N/C	N/C	
3	Kit	USDD	0	Base Plate	ATX-P	N/C	N/C	
				STATION CONTROLLER OPTIONS				
4	Kit	USDD	1	**ATX EXPANSION KIT**	**ATX-EXP**	$ 5,994.00	$ 5,994.00	
5	Kit	USDD	0	Rack Mount Ears	ATX-E	N/C	N/C	
6	Kit	USDD	0	Audio Extension Module	AUD-EXT	$ -	$ -	
7	Kit	USDD	0	Fiber LAN Modules (2)	FIB-LAN-KIT	$ -	$ -	
8	Ea	USDD	1	**G2 VOICEALERT** - (One Time) Single Station License	**VA**	$ 834.00	$ 834.00	
				PERIPHERAL OPTIONS				
9	Ea	USDD	4	**G2 ROOM REMOTE** Module	**RR**	$ 1,650.00	$ 6,600.00	
10	Ea	USDD	0	RR Trim Plate, for Flush-Mount	RR-TP	$ -	$ -	
11	Ea	USDD	0	RR Back-Box, for solid-wall flush-mounting	RR-BB	$ -	$ -	
12	Ea	USDD	5	**G2 MESSAGE REMOTE** Module	**MR**	$ 1,050.00	$ 3,150.00	
13	Ea	USDD	3	**G2 SIGN REMOTE** Module	**SR**	$ 525.00	$ 1,575.00	
14	Ea	USDD	0	**G2 HDTV REMOTE** Module	**TVR**	$ -	$ -	
15	Ea	USDD	0	**G2 MESSAGE SIGN**, Digital LED (**GammaSign**)	**MS-G**	$ -	$ -	
15	Ea	USDD	8	**MESSAGE SIGN**, Digital LED (**BetaBrite**)	**MS-B**	$ 324.00	$ 2,592.00	
16	Ea	USDD	0	MS Adapter Plate, VESA 100	MS-ADPT-V100	$ -	$ -	
17	Ea	USDD	0	MS Tie-Straps (pair) - join two MSs	MS-ADPT-STRP	$ -	$ -	
18	Ea	USDD	0	MS Mount - Articulating, Std. reach	MS-MNT-ART-S	$ -	$ -	
19	Ea	USDD	0	MS Mount - Articulating, Long reach	MS-MNT-ART-L	$ -	$ -	
20	Ea	USDD	0	MS Mount - X2 Arm, Artic., Long	MS-MNT-ART-LX2	$ -	$ -	
21	Ea	USDD	0	**G2 DOUBLE MS KIT** (MR, 90-deg Mount, x2MS)	**MS-X2K**	$ -	$ -	
22	Ea	USDD	0	**G2 I/O REMOTE** w/ 8 In & 8 Out	**IOR**	$ -	$ -	
23	Ea	USDD	0	Turnout Timer, Count Up, 2.25"X	TOT	$ -	$ -	
24	Ea	USDD	1	Strobe Light / Red LED	STR	$ 450.00	$ 450.00	
25	Ea	USDD	0	**G2 Color Indicator Remote** - Up to 8 unique colors	**CIR**	$ -	$ -	
26	Ea	USDD	0	Push Button, Standard (Black)	PB-B	$ -	$ -	
27	Ea	USDD	0	Push Button, Emergency (Red)	PB-R	$ -	$ -	
28	Ea	Atlas	1	Audio Amplifier, External, Standard	AMP	$ 888.00	$ 888.00	
29	Ea	Bogn	9	Speaker-**APP**/Weatherized (**A2T**), Surface, 70v	SPK-W-SM	$ 252.00	$ 2,268.00	
30	Ea	Bogn	10	Speaker - Standard, Flush Mount, 8Ω/70v (**S86**)	SPK-STD-FM	$ 66.00	$ 660.00	
31	Ea	Bogn	0	Speaker - Surface Mount (**MB**), 8Ω/70v	SPK-STD-SM	$ -	$ -	
32	Ea	USDD	25	**G2 LED SPEAKER** - Flush Mount, 8Ω/70v	**SPK-LED-FM**	$ 270.00	$ 6,750.00	
33	Ea	USDD	0	**G2 LED SPEAKER** - Surface Mount (**MB**), 8Ω/70v	**SPK-LED-SM**	$ -	$ -	
34	Ea	TJC	5	Transformer, 8ohm to 70V, External	XFMR	$ 48.00	$ 240.00	
35	Ea	TBD	0	ATX UPS, Standard (listed seperately / Form B-1 / x2 Needed for this station)	UPS-STD	$ -	$ -	
36	Ea	USDD	0	UPS Extended Runtime Battery	UPS-EXT	$ -	$ -	
37	Ea	VAL	0	70-Volt Adapter Solution to tie new FSAS Output into existing amplified speakers	MD-XFMR	$ -	$ -	
38	Ea	USDD	0	2-Channel Line-Level Audio Mixing Solution to tie into existing (OFE) Miami-Dade Audio System	MD-MXR	$ -	$ -	
39	Ea	USDD	0	I/O Remote Audio Switching Panel to integrate with existing (OFE) Valcom Paging	MD-RASP	$ -	$ -	
				STATION-LEVEL SERVICES				
40	Ea	USDD	0	**Station Installation**	**ST-INST**	$ -	$ -	
41	Ea	USDD	0	**Station Remediation**	**ST-INST**	$ -	$ -	

42	Ea	USDD	0	**Station Installation Supervision**	**ST-IS**	$ -	$ -	
43	Ea	USDD	1	**Station Configuration & Start-Up**	**ST-SU**	$ 1,500.00	$ 1,500.00	
44	Ea	USDD	1	**Station Project Management**	**ST-PM**	$ 1,250.00	$ 1,250.00	
45	Ea	USDD	1	**Station Engineering / Design Services**	**ST-ES**	$ 500.00	$ 500.00	
46	Ea	USDD	1	**Station Documentation**	**ST-DM**	$ 75.00	$ 75.00	
47	Ea	USDD	0	**Station Training - User/Technician** via streamed online video with per-station license and participant registration/verification.	**TRA-UT-VID**	$ -	$ -	
48	Ea	USDD	0	**Station Training - User/Technician. On-Site @ Station.** 1 Hour, 1 Visit. (3 Units/Hours suggested to cover 3 shifts)	**TRA-UT-OS**	$ -	$ -	
49	Ea	USDD	0	**Training - Installation Contractor / USDD G2 Certification** (TBD - only needed if using non-certified contractor)	**TRA-IC**	$ -	$ -	
50	Ea	USDD	0	**Miscellaneous/TBD**	**MISC**	$ -	$ -	

NO-INSTALL FS64 OPTION	**Individual Station Equipment Subtotal**	$	53,326
	Individual Station Shipping	$	1,745
	INDIVIDUAL STATION GRAND TOTAL	$	**55,071**

INSTALLED FS70 OPTION

INSTALLED - This NEW station was requested (Post-RFP) to be an ADD/ALT Option, and has not been included (with 'Basic' System design) in any previous quotation or solicitation response.

Item	Unit	Mfr	Qty	Description	Part No.	Unit	Ext	
				PHOENIX G2 - STATION CONTROLLER (Required)				
				Control up to (8) peripherals				
1	Kit	USDD	1	**G2 ATX STATION CONTROLLER**	**ATX**	$ 18,000.00	$ 18,000.00	
2	Kit	USDD	0	Rack Mount Ears	ATX-E	N/C	N/C	
3	Kit	USDD	0	Base Plate	ATX-P	N/C	N/C	
				STATION CONTROLLER OPTIONS				
4	Kit	USDD	1	**ATX EXPANSION KIT**	**ATX-EXP**	$ 5,994.00	$ 5,994.00	
5	Kit	USDD	0	Rack Mount Ears	ATX-E	N/C	N/C	
6	Kit	USDD	0	Audio Extension Module	AUD-EXT	$ -	$ -	
7	Kit	USDD	0	Fiber LAN Modules (2)	FIB-LAN-KIT	$ -	$ -	
8	Ea	USDD	1	**G2 VOICEALERT** - (One Time) Single Station License	**VA**	$ 834.00	$ 834.00	
				PERIPHERAL OPTIONS				
9	Ea	USDD	4	**G2 ROOM REMOTE** Module	**RR**	$ 1,650.00	$ 6,600.00	
10	Ea	USDD	0	RR Trim Plate, for Flush-Mount	RR-TP	$ -	$ -	
11	Ea	USDD	0	RR Back-Box, for solid-wall flush-mounting	RR-BB	$ -	$ -	
12	Ea	USDD	3	**G2 MESSAGE REMOTE** Module	**MR**	$ 1,050.00	$ 3,150.00	
13	Ea	USDD	3	**G2 SIGN REMOTE** Module	**SR**	$ 525.00	$ 1,575.00	
14	Ea	USDD	0	**G2 HDTV REMOTE** Module	**TVR**	$ -	$ -	
15	Ea	USDD	0	**G2 MESSAGE SIGN**, Digital LED (**GammaSign**)	**MS-G**	$ -	$ -	
15	Ea	USDD	8	**MESSAGE SIGN**, Digital LED (**BetaBrite**)	**MS-B**	$ 324.00	$ 2,592.00	
16	Ea	USDD	0	MS Adapter Plate, VESA 100	MS-ADPT-V100	$ -	$ -	
17	Ea	USDD	0	MS Tie-Straps (pair) - join two MSs	MS-ADPT-STRP	$ -	$ -	
18	Ea	USDD	0	MS Mount - Articulating, Std. reach	MS-MNT-ART-S	$ -	$ -	
19	Ea	USDD	0	MS Mount - Articulating, Long reach	MS-MNT-ART-L	$ -	$ -	
20	Ea	USDD	0	MS Mount - X2 Arm, Artic., Long	MS-MNT-ART-LX2	$ -	$ -	
21	Ea	USDD	0	**G2 DOUBLE MS KIT** (MR, 90-deg Mount, x2MS)	**MS-X2K**	$ -	$ -	
22	Ea	USDD	0	**G2 I/O REMOTE** w/ 8 In & 8 Out	**IOR**	$ -	$ -	
23	Ea	USDD	0	Turnout Timer, Count Up, 2.25"X	TOT	$ -	$ -	
24	Ea	USDD	2	Strobe Light / Red LED	STR	$ 450.00	$ 900.00	
25	Ea	USDD	0	**G2 Color Indicator Remote** - Up to 8 unique colors	**CIR**	$ -	$ -	
26	Ea	USDD	0	Push Button, Standard (Black)	PB-B	$ -	$ -	
27	Ea	USDD	0	Push Button, Emergency (Red)	PB-R	$ -	$ -	
28	Ea	Atlas	1	Audio Amplifier, External, Standard	AMP	$ 888.00	$ 888.00	
29	Ea	Bogn	8	Speaker-**APP**/Weatherized (**A2T**), Surface, 70v	SPK-W-SM	$ 252.00	$ 2,016.00	
30	Ea	Bogn	10	Speaker - Standard, Flush Mount, 8Ω/70v (S86)	SPK-STD-FM	$ 66.00	$ 660.00	
31	Ea	Bogn	0	Speaker - Surface Mount (MB), 8Ω/70v	SPK-STD-SM	$ -	$ -	
32	Ea	USDD	18	**G2 LED SPEAKER** - Flush Mount, 8Ω/70v	**SPK-LED-FM**	$ 270.00	$ 4,860.00	
33	Ea	USDD	0	**G2 LED SPEAKER** - Surface Mount (MB), 8Ω/70v	**SPK-LED-SM**	$ -	$ -	
34	Ea	TIC	5	Transformer, 8ohm to 70V, External	XFMR	$ 48.00	$ 240.00	
35	Ea	TBD	0	ATX UPS, Standard (listed seperately / Form B-1 / x2 Needed for this station)	UPS-STD	$ -	$ -	
36	Ea	USDD	0	UPS Extended Runtime Battery	UPS-EXT	$ -	$ -	
37	Ea	VAL	0	70-Volt Adapter Solution to tie new FSAS Output into existing amplified speakers	MD-XFMR	$ -	$ -	
38	Ea	USDD	0	2-Channel Line-Level Audio Mixing Solution to tie into existing (OFE) Miami-Dade Audio System	MD-MXR	$ -	$ -	
39	Ea	USDD	0	I/O Remote Audio Switching Panel to integrate with existing (OFE) Valcom Paging	MD-RASP	$ -	$ -	
				STATION-LEVEL SERVICES				
40	Ea	USDD	1	**Station Installation**	**ST-INST**	$ 20,290.00	$ 20,290.00	
41	Ea	USDD	0	**Station Remediation**	**ST-INST**	$ -	$ -	

42	Ea	USDD	0	**Station Installation Supervision**	**ST-IS**	$ -	$ -	
43	Ea	USDD	1	**Station Configuration & Start-Up**	**ST-SU**	$ 1,449.00	$ 1,449.00	
44	Ea	USDD	1	**Station Project Management**	**ST-PM**	$ 1,208.00	$ 1,208.00	
45	Ea	USDD	1	**Station Engineering / Design Services**	**ST-ES**	$ 483.00	$ 483.00	
46	Ea	USDD	1	**Station Documentation**	**ST-DM**	$ 72.00	$ 72.00	
47	Ea	USDD	0	**Station Training - User/Technician** via streamed online video with per-station license and participant registration/verification.	**TRA-UT-VID**	$ -	$ -	
48	Ea	USDD	0	**Station Training - User/Technician. On-Site @ Station.** 1 Hour, 1 Visit. (3 Units/Hours suggested to cover 3 shifts)	**TRA-UT-OS**	$ -	$ -	
49	Ea	USDD	0	**Training - Installation Contractor / USDD G2 Certification** (TBD - only needed if using non-certified contractor)	**TRA-IC**	$ -	$ -	
50	Ea	USDD	0	**Miscellaneous/TBD**	**MISC**	$ -	$ -	

INSTALLED FS70 OPTION	**Individual Station Equipment Subtotal**	$	71,811
	Individual Station Shipping	$	1,605
	INDIVIDUAL STATION GRAND TOTAL	$	**73,416**

NO-INSTALL FS70 OPTION

NO-INSTALL - This NEW station was requested (Post-RFP) to be an ADD/ALT Option, and has not been included (with 'Basic' System design) in any previous quotation or solicitation response.

Item	Unit	Mfr	Qty	Description	Part No.	Unit	Ext	
				PHOENIX G2 - STATION CONTROLLER (Required)				
				Control up to (8) peripherals				
1	Kit	USDD	1	**G2 ATX STATION CONTROLLER**	**ATX**	$ 18,000.00	$ 18,000.00	
2	Kit	USDD	0	Rack Mount Ears	ATX-E	N/C	N/C	
3	Kit	USDD	0	Base Plate	ATX-P	N/C	N/C	
				STATION CONTROLLER OPTIONS				
4	Kit	USDD	1	**ATX EXPANSION KIT**	**ATX-EXP**	$ 5,994.00	$ 5,994.00	
5	Kit	USDD	0	Rack Mount Ears	ATX-E	N/C	N/C	
6	Kit	USDD	0	Audio Extension Module	AUD-EXT	$ -	$ -	
7	Kit	USDD	0	Fiber LAN Modules (2)	FIB-LAN-KIT	$ -	$ -	
8	Ea	USDD	1	**G2 VOICEALERT** - (One Time) Single Station License	**VA**	$ 834.00	$ 834.00	
				PERIPHERAL OPTIONS				
9	Ea	USDD	4	**G2 ROOM REMOTE** Module	**RR**	$ 1,650.00	$ 6,600.00	
10	Ea	USDD	0	RR Trim Plate, for Flush-Mount	RR-TP	$ -	$ -	
11	Ea	USDD	0	RR Back-Box, for solid-wall flush-mounting	RR-BB	$ -	$ -	
12	Ea	USDD	3	**G2 MESSAGE REMOTE** Module	**MR**	$ 1,050.00	$ 3,150.00	
13	Ea	USDD	3	**G2 SIGN REMOTE** Module	**SR**	$ 525.00	$ 1,575.00	
14	Ea	USDD	0	**G2 HDTV REMOTE** Module	**TVR**	$ -	$ -	
15	Ea	USDD	0	**G2 MESSAGE SIGN**, Digital LED (**GammaSign**)	**MS-G**	$ -	$ -	
15	Ea	USDD	8	**MESSAGE SIGN**, Digital LED (**BetaBrite**)	**MS-B**	$ 324.00	$ 2,592.00	
16	Ea	USDD	0	MS Adapter Plate, VESA 100	MS-ADPT-V100	$ -	$ -	
17	Ea	USDD	0	MS Tie-Straps (pair) - join two MSs	MS-ADPT-STRP	$ -	$ -	
18	Ea	USDD	0	MS Mount - Articulating, Std. reach	MS-MNT-ART-S	$ -	$ -	
19	Ea	USDD	0	MS Mount - Articulating, Long reach	MS-MNT-ART-L	$ -	$ -	
20	Ea	USDD	0	MS Mount - X2 Arm, Artic., Long	MS-MNT-ART-LX2	$ -	$ -	
21	Ea	USDD	0	**G2 DOUBLE MS KIT** (MR, 90-deg Mount, x2MS)	**MS-X2K**	$ -	$ -	
22	Ea	USDD	0	**G2 I/O REMOTE** w/ 8 In & 8 Out	**IOR**	$ -	$ -	
23	Ea	USDD	0	Turnout Timer, Count Up, 2.25"X	TOT	$ -	$ -	
24	Ea	USDD	2	Strobe Light / Red LED	STR	$ 450.00	$ 900.00	
25	Ea	USDD	0	**G2 Color Indicator Remote** - Up to 8 unique colors	**CIR**	$ -	$ -	
26	Ea	USDD	0	Push Button, Standard (Black)	PB-B	$ -	$ -	
27	Ea	USDD	0	Push Button, Emergency (Red)	PB-R	$ -	$ -	
28	Ea	Atlas	1	Audio Amplifier, External, Standard	AMP	$ 888.00	$ 888.00	
29	Ea	Bogn	8	Speaker-**APP**/Weatherized (**A2T**), Surface, 70v	SPK-W-SM	$ 252.00	$ 2,016.00	
30	Ea	Bogn	10	Speaker - Standard, Flush Mount, 8Ω/70v (**S86**)	SPK-STD-FM	$ 66.00	$ 660.00	
31	Ea	Bogn	0	Speaker - Surface Mount (**MB**), 8Ω/70v	SPK-STD-SM	$ -	$ -	
32	Ea	USDD	18	**G2 LED SPEAKER** - Flush Mount, 8Ω/70v	**SPK-LED-FM**	$ 270.00	$ 4,860.00	
33	Ea	USDD	0	**G2 LED SPEAKER** - Surface Mount (**MB**), 8Ω/70v	**SPK-LED-SM**	$ -	$ -	
34	Ea	TIC	5	Transformer, 8ohm to 70V, External	XFMR	$ 48.00	$ 240.00	
35	Ea	TBD	0	ATX UPS, Standard (listed seperately / Form B-1 / x2 Needed for this station)	UPS-STD	$ -	$ -	
36	Ea	USDD	0	UPS Extended Runtime Battery	UPS-EXT	$ -	$ -	
37	Ea	VAL	0	70-Volt Adapter Solution to tie new FSAS Output into existing amplified speakers	MD-XFMR	$ -	$ -	
38	Ea	USDD	0	2-Channel Line-Level Audio Mixing Solution to tie into existing (OFE) Miami-Dade Audio System	MD-MXR	$ -	$ -	
39	Ea	USDD	0	I/O Remote Audio Switching Panel to integrate with existing (OFE) Valcom Paging	MD-RASP	$ -	$ -	
				STATION-LEVEL SERVICES				
40	Ea	USDD	0	**Station Installation**	**ST-INST**	$ -	$ -	
41	Ea	USDD	0	**Station Remediation**	**ST-INST**	$ -	$ -	

42	Ea	USDD	0	**Station Installation Supervision**	**ST-IS**	$	-	$	-
43	Ea	USDD	1	**Station Configuration & Start-Up**	**ST-SU**	$	1,449.00	$	1,449.00
44	Ea	USDD	1	**Station Project Management**	**ST-PM**	$	1,208.00	$	1,208.00
45	Ea	USDD	1	**Station Engineering / Design Services**	**ST-ES**	$	483.00	$	483.00
46	Ea	USDD	1	**Station Documentation**	**ST-DM**	$	72.00	$	72.00
47	Ea	USDD	0	**Station Training - User/Technician** via streamed online video with per-station license and participant registration/verification.	**TRA-UT-VID**	$	-	$	-
48	Ea	USDD	0	**Station Training - User/Technician. On-Site @ Station.** 1 Hour, 1 Visit. (3 Units/Hours suggested to cover 3 shifts)	**TRA-UT-OS**	$	-	$	-
49	Ea	USDD	0	**Training - Installation Contractor / USDD G2 Certification** (TBD - only needed if using non-certified contractor)	**TRA-IC**	$	-	$	-
50	Ea	USDD	0	**Miscellaneous/TBD**	**MISC**	$	-	$	-

NO-INSTALL FS70 OPTION	**Individual Station Equipment Subtotal**	$	51,521
	Individual Station Shipping	$	1,605
	INDIVIDUAL STATION GRAND TOTAL	$	**53,126**

INSTALLED 'DEMO STATION' OPTION

INSTALLED - This NEW 'Demo' station was requested (Post-RFP) to be an ADD/ALT Option, and has not been included (with 'Basic' System design) in any previous quotation or solicitation response.

Item	Unit	Mfr	Qty	Description	Part No.	Unit	Ext	
				PHOENIX G2 - STATION CONTROLLER (Required)				
				Control up to (8) peripherals				
1	Kit	USDD	1	**G2 ATX STATION CONTROLLER**	**ATX**	$ 18,000.00	$ 18,000.00	
2	Kit	USDD	0	Rack Mount Ears	ATX-E	N/C	N/C	
3	Kit	USDD	0	Base Plate	ATX-P	N/C	N/C	
				STATION CONTROLLER OPTIONS				
4	Kit	USDD	0	**ATX EXPANSION KIT**	**ATX-EXP**	$ -	$ -	
5	Kit	USDD	0	Rack Mount Ears	ATX-E	N/C	N/C	
6	Kit	USDD	0	Audio Extension Module	AUD-EXT	$ -	$ -	
7	Kit	USDD	0	Fiber LAN Modules (2)	FIB-LAN-KIT	$ -	$ -	
8	Ea	USDD	1	**G2 VOICEALERT** - (One Time) Single Station License	**VA**	$ 834.00	$ 834.00	
				PERIPHERAL OPTIONS				
9	Ea	USDD	1	**G2 ROOM REMOTE** Module	**RR**	$ 1,650.00	$ 1,650.00	
10	Ea	USDD	0	RR Trim Plate, for Flush-Mount	RR-TP	$ -	$ -	
11	Ea	USDD	0	RR Back-Box, for solid-wall flush-mounting	RR-BB	$ -	$ -	
12	Ea	USDD	0	**G2 MESSAGE REMOTE** Module	**MR**	$ -	$ -	
13	Ea	USDD	0	**G2 SIGN REMOTE** Module	**SR**	$ -	$ -	
14	Ea	USDD	0	**G2 HDTV REMOTE** Module	**TVR**	$ -	$ -	
15	Ea	USDD	0	**G2 MESSAGE SIGN**, Digital LED (**GammaSign**)	**MS-G**	$ -	$ -	
15	Ea	USDD	3	**MESSAGE SIGN**, Digital LED (**BetaBrite**)	**MS-B**	$ 324.00	$ 972.00	
16	Ea	USDD	2	MS Adapter Plate, VESA 100	MS-ADPT-V100	$ 54.00	$ 108.00	
17	Ea	USDD	1	MS Tie-Straps (pair) - join two MSs	MS-ADPT-STRP	$ 24.00	$ 24.00	
18	Ea	USDD	0	MS Mount - Articulating, Std. reach	MS-MNT-ART-S	$ -	$ -	
19	Ea	USDD	1	MS Mount - Articulating, Long reach	MS-MNT-ART-L	$ 259.00	$ 259.00	
20	Ea	USDD	0	MS Mount - X2 Arm, Artic., Long	MS-MNT-ART-LX2	$ -	$ -	
21	Ea	USDD	0	**G2 DOUBLE MS KIT** (MR, 90-deg Mount, x2MS)	**MS-X2K**	$ -	$ -	
22	Ea	USDD	0	**G2 I/O REMOTE** w/ 8 In & 8 Out	**IOR**	$ -	$ -	
23	Ea	USDD	0	Turnout Timer, Count Up, 2.25"X	TOT	$ -	$ -	
24	Ea	USDD	1	Strobe Light / Red LED	STR	$ 450.00	$ 450.00	
25	Ea	USDD	0	**G2 Color Indicator Remote** - Up to 8 unique colors	**CIR**	$ -	$ -	
26	Ea	USDD	1	Push Button, Standard (Black)	PB-B	$ 90.00	$ 90.00	
27	Ea	USDD	0	Push Button, Emergency (Red)	PB-R	$ -	$ -	
28	Ea	Atlas	0	Audio Amplifier, External, Standard	AMP	$ -	$ -	
29	Ea	Bogn	1	Speaker-**APP**/Weatherized (**A2T**), Surface, 70v	SPK-W-SM	$ 252.00	$ 252.00	
30	Ea	Bogn	1	Speaker - Standard, Flush Mount, 8Ω/70v (**S86**)	SPK-STD-FM	$ 66.00	$ 66.00	
31	Ea	Bogn	1	Speaker - Surface Mount (**MB**), 8Ω/70v	SPK-STD-SM	$ 66.00	$ 66.00	
32	Ea	USDD	1	**G2 LED SPEAKER** - Flush Mount, 8Ω/70v	**SPK-LED-FM**	$ 270.00	$ 270.00	
33	Ea	USDD	1	**G2 LED SPEAKER** - Surface Mount (**MB**), 8Ω/70v	**SPK-LED-SM**	$ 270.00	$ 270.00	
34	Ea	TIC	1	Transformer, 8ohm to 70V, External	XFMR	$ 48.00	$ 48.00	
35	Ea	TBD	0	ATX UPS, Standard (listed seperately / Form B-1 / x2 Needed for this station)	UPS-STD	$ -	$ -	
36	Ea	USDD	0	UPS Extended Runtime Battery	UPS-EXT	$ -	$ -	
37	Ea	VAL	0	70-Volt Adapter Solution to tie new FSAS Output into existing amplified speakers	MD-XFMR	$ -	$ -	
38	Ea	USDD	0	2-Channel Line-Level Audio Mixing Solution to tie into existing (OFE) Miami-Dade Audio System	MD-MXR	$ -	$ -	
39	Ea	USDD	0	I/O Remote Audio Switching Panel to integrate with existing (OFE) Valcom Paging	MD-RASP	$ -	$ -	
				STATION-LEVEL SERVICES				
40	Ea	USDD	1	**Station Installation**	**ST-INST**	$ 2,400.00	$ 2,400.00	
41	Ea	USDD	0	**Station Remediation**	**ST-INST**	$ -	$ -	

42	Ea	USDD	0	**Station Installation Supervision**	**ST-IS**	$	-	$ -	
43	Ea	USDD	1	**Station Configuration & Start-Up**	**ST-SU**	$	467.00	$ 467.00	
44	Ea	USDD	1	**Station Project Management**	**ST-PM**	$	350.00	$ 350.00	
45	Ea	USDD	1	**Station Engineering / Design Services**	**ST-ES**	$	234.00	$ 234.00	
46	Ea	USDD	1	**Station Documentation**	**ST-DM**	$	35.00	$ 35.00	
47	Ea	USDD	0	**Station Training - User/Technician** via streamed online video with per-station license and participant registration/verification.	**TRA-UT-VID**	$	-	$ -	
48	Ea	USDD	0	**Station Training - User/Technician. On-Site @ Station.** 1 Hour, 1 Visit. (3 Units/Hours suggested to cover 3 shifts)	**TRA-UT-OS**	$	-	$ -	
49	Ea	USDD	0	**Training - Installation Contractor / USDD G2 Certification** (TBD - only needed if using non-certified contractor)	**TRA-IC**	$	-	$ -	
50	Ea	USDD	0	**Miscellaneous/TBD**	**MISC**	$	-	$ -	

INSTALLED 'DEMO STATION' OPTION			
	Individual Station Equipment Subtotal	$	26,845
	Individual Station Shipping	$	532
	INDIVIDUAL STATION GRAND TOTAL	$	27,377

NO-INSTALL 'DEMO STATION' OPTION

NO INSTALL - This NEW 'Demo' station was requested (Post-RFP) to be an ADD/ALT Option, and has not been included (with 'Basic' System design) in any previous quotation or solicitation response.

Item	Unit	Mfr	Qty	Description	Part No.	Unit	Ext	
				PHOENIX G2 - STATION CONTROLLER (Required)				
				Control up to (8) peripherals				
1	Kit	USDD	1	**G2 ATX STATION CONTROLLER**	**ATX**	$ 18,000.00	$ 18,000.00	
2	Kit	USDD	0	Rack Mount Ears	ATX-E	N/C	N/C	
3	Kit	USDD	0	Base Plate	ATX-P	N/C	N/C	
				STATION CONTROLLER OPTIONS				
4	Kit	USDD	0	**ATX EXPANSION KIT**	**ATX-EXP**	$ -	$ -	
5	Kit	USDD	0	Rack Mount Ears	ATX-E	N/C	N/C	
6	Kit	USDD	0	Audio Extension Module	AUD-EXT	$ -	$ -	
7	Kit	USDD	0	Fiber LAN Modules (2)	FIB-LAN-KIT	$ -	$ -	
8	Ea	USDD	1	**G2 VOICEALERT** - (One Time) Single Station License	**VA**	$ 834.00	$ 834.00	
				PERIPHERAL OPTIONS				
9	Ea	USDD	1	**G2 ROOM REMOTE** Module	**RR**	$ 1,650.00	$ 1,650.00	
10	Ea	USDD	0	RR Trim Plate, for Flush-Mount	RR-TP	$ -	$ -	
11	Ea	USDD	0	RR Back-Box, for solid-wall flush-mounting	RR-BB	$ -	$ -	
12	Ea	USDD	0	**G2 MESSAGE REMOTE** Module	**MR**	$ -	$ -	
13	Ea	USDD	0	**G2 SIGN REMOTE** Module	**SR**	$ -	$ -	
14	Ea	USDD	0	**G2 HDTV REMOTE** Module	**TVR**	$ -	$ -	
15	Ea	USDD	0	**G2 MESSAGE SIGN**, Digital LED (**GammaSign**)	**MS-G**	$ -	$ -	
15	Ea	USDD	3	**MESSAGE SIGN**, Digital LED (**BetaBrite**)	**MS-B**	$ 324.00	$ 972.00	
16	Ea	USDD	2	MS Adapter Plate, VESA 100	MS-ADPT-V100	$ 54.00	$ 108.00	
17	Ea	USDD	1	MS Tie-Straps (pair) - join two MSs	MS-ADPT-STRP	$ 24.00	$ 24.00	
18	Ea	USDD	0	MS Mount - Articulating, Std. reach	MS-MNT-ART-S	$ -	$ -	
19	Ea	USDD	1	MS Mount - Articulating, Long reach	MS-MNT-ART-L	$ 259.00	$ 259.00	
20	Ea	USDD	0	MS Mount - X2 Arm, Artic., Long	MS-MNT-ART-LX2	$ -	$ -	
21	Ea	USDD	0	**G2 DOUBLE MS KIT** (MR, 90-deg Mount, x2MS)	**MS-X2K**	$ -	$ -	
22	Ea	USDD	0	**G2 I/O REMOTE** w/ 8 In & 8 Out	**IOR**	$ -	$ -	
23	Ea	USDD	0	Turnout Timer, Count Up, 2.25"X	TOT	$ -	$ -	
24	Ea	USDD	1	Strobe Light / Red LED	STR	$ 450.00	$ 450.00	
25	Ea	USDD	0	**G2 Color Indicator Remote** - Up to 8 unique colors	**CIR**	$ -	$ -	
26	Ea	USDD	1	Push Button, Standard (Black)	PB-B	$ 90.00	$ 90.00	
27	Ea	USDD	0	Push Button, Emergency (Red)	PB-R	$ -	$ -	
28	Ea	Atlas	0	Audio Amplifier, External, Standard	AMP	$ -	$ -	
29	Ea	Bogn	1	Speaker-**APP**/Weatherized (**A2T**), Surface, 70v	SPK-W-SM	$ 252.00	$ 252.00	
30	Ea	Bogn	1	Speaker - Standard, Flush Mount, 8Ω/70v (**S86**)	SPK-STD-FM	$ 66.00	$ 66.00	
31	Ea	Bogn	1	Speaker - Surface Mount (**MB**), 8Ω/70v	SPK-STD-SM	$ 66.00	$ 66.00	
32	Ea	USDD	1	**G2 LED SPEAKER** - Flush Mount, 8Ω/70v	**SPK-LED-FM**	$ 270.00	$ 270.00	
33	Ea	USDD	1	**G2 LED SPEAKER** - Surface Mount (**MB**), 8Ω/70v	**SPK-LED-SM**	$ 270.00	$ 270.00	
34	Ea	TIC	1	Transformer, 8ohm to 70V, External	XFMR	$ 48.00	$ 48.00	
35	Ea	TBD	0	ATX UPS, Standard (listed seperately / Form B-1 / x2 Needed for this station)	UPS-STD	$ -	$ -	
36	Ea	USDD	0	UPS Extended Runtime Battery	UPS-EXT	$ -	$ -	
37	Ea	VAL	0	70-Volt Adapter Solution to tie new FSAS Output into existing amplified speakers	MD-XFMR	$ -	$ -	
38	Ea	USDD	0	2-Channel Line-Level Audio Mixing Solution to tie into existing (OFE) Miami-Dade Audio System	MD-MXR	$ -	$ -	
39	Ea	USDD	0	I/O Remote Audio Switching Panel to integrate with existing (OFE) Valcom Paging	MD-RASP	$ -	$ -	
				STATION-LEVEL SERVICES				
40	Ea	USDD	0	**Station Installation**	**ST-INST**	$ -	$ -	
41	Ea	USDD	0	**Station Remediation**	**ST-INST**	$ -	$ -	

42	Ea	USDD	0	**Station Installation Supervision**	**ST-IS**	$ -	$ -	
43	Ea	USDD	1	**Station Configuration & Start-Up**	**ST-SU**	$ 467.00	$ 467.00	
44	Ea	USDD	1	**Station Project Management**	**ST-PM**	$ 350.00	$ 350.00	
45	Ea	USDD	1	**Station Engineering / Design Services**	**ST-ES**	$ 234.00	$ 234.00	
46	Ea	USDD	1	**Station Documentation**	**ST-DM**	$ 35.00	$ 35.00	
47	Ea	USDD	0	**Station Training - User/Technician** via streamed online video with per-station license and participant registration/verification.	**TRA-UT-VID**	$ -	$ -	
48	Ea	USDD	0	**Station Training - User/Technician. On-Site @ Station.** 1 Hour, 1 Visit. (3 Units/Hours suggested to cover 3 shifts)	**TRA-UT-OS**	$ -	$ -	
49	Ea	USDD	0	**Training - Installation Contractor / USDD G2 Certification** (TBD - only needed if using non-certified contractor)	**TRA-IC**	$ -	$ -	
50	Ea	USDD	0	**Miscellaneous/TBD**	**MISC**	$ -	$ -	

NO-INSTALL 'DEMO STATION' OPTION	**Individual Station Equipment Subtotal**	$	24,445
	Individual Station Shipping	$	532
	INDIVIDUAL STATION GRAND TOTAL	$	**24,977**

Miami-Dade County
Fire Station Alerting System

REF PROPOSAL
MDF010 v2

Station-Level Equipment/Services

INSTALLED Individual Station Listing

INSTALLED Basic/Core Fire Station Alerting System Design for all 65 Stations + 2 Post-RFP New-Build Additions + 1 Demo Station (and with FS02 having no-cost upgrades detailed seperately)

STATION NUMBER	G2 ATX STATION CONTROLLER	G2 VOICEALERT	UPGRADES from Basic Design? (Y/N)	G2 SIGN REMOTE	MESSAGE SIGN	70-Volt Adapter	Audio Mixing Solution	Remote Audio Switching Panel	Station Installation	Station Config & Start-Up	Station Project Management	Station Engineering & Design	Station Documentation	Shipping	STATION TOTAL
	$18,000.00	$834.00		$525.00	$972.00	$200.00	$150.00	$1,550.00	$3,177.00	$710.00	$592.00	$237.00	$36.00	$440.00	
1	1	1	N	1	1	1	1	1	1	1	1	1	1	1	$29,614
2B	1	1	See Below	1	1	1	1	1	1	1	1	1	1	1	$29,614
2U (Offered N/C by USDD in RFP)	0	0	Y	N/A - see 'Options' Quote	N/A - see 'Options' Quote	N/A - see 'Options' Quote	N/A - see 'Options' Quote	N/A - see 'Options' Quote	N/A - see 'Options' Quote	N/A - see 'Options' Quote	N/A - see 'Options' Quote	N/A - see 'Options' Quote	N/A - see 'Options' Quote	N/A - see 'Options' Quote	$0
3	1	1	N	1	1	1	1	1	1	1	1	1	1	1	$29,614
4	1	1	N	1	1	1	1	1	1	1	1	1	1	1	$29,614
5	1	1	N	1	1	1	1	1	1	1	1	1	1	1	$29,614
6	1	1	N	1	1	1	1	1	1	1	1	1	1	1	$29,614
7	1	1	N	1	1	1	1	1	1	1	1	1	1	1	$29,614
8	1	1	N	1	1	1	1	1	1	1	1	1	1	1	$29,614
9	1	1	N	1	1	1	1	1	1	1	1	1	1	1	$29,614
10	1	1	N	1	1	1	1	1	1	1	1	1	1	1	$29,614
11	1	1	N	1	1	1	1	1	1	1	1	1	1	1	$29,614
12B	1	1	See Below	1	1	1	1	1	1	1	1	1	1	1	$29,614
12U (Upgrades Req.d Post-RFP)	0	0	Y	N/A - see 'Options' Quote	N/A - see 'Options' Quote	N/A - see 'Options' Quote	N/A - see 'Options' Quote	N/A - see 'Options' Quote	N/A - see 'Options' Quote	N/A - see 'Options' Quote	N/A - see 'Options' Quote	N/A - see 'Options' Quote	N/A - see 'Options' Quote	N/A - see 'Options' Quote	$42,851
13	1	1	N	1	1	1	1	1	1	1	1	1	1	1	$29,614
14	1	1	N	1	1	1	1	1	1	1	1	1	1	1	$29,614
15	1	1	N	1	1	1	1	1	1	1	1	1	1	1	$29,614
16	1	1	N	1	1	1	1	1	1	1	1	1	1	1	$29,614
17	1	1	N	1	1	1	1	1	1	1	1	1	1	1	$29,614
19	1	1	N	1	1	1	1	1	1	1	1	1	1	1	$29,614
20	1	1	N	1	1	1	1	1	1	1	1	1	1	1	$29,614
21	1	1	N	1	1	1	1	1	1	1	1	1	1	1	$29,614
22	1	1	N	1	1	1	1	1	1	1	1	1	1	1	$29,614
23	1	1	N	1	1	1	1	1	1	1	1	1	1	1	$29,614
24	1	1	N	1	1	1	1	1	1	1	1	1	1	1	$29,614
25B	1	1	N	1	1	1	1	1	1	1	1	1	1	1	$29,614
25U (Upgrades Req.d Post-RFP)	0	0	Y	N/A - see 'Options' Quote	N/A - see 'Options' Quote	N/A - see 'Options' Quote	N/A - see 'Options' Quote	N/A - see 'Options' Quote	N/A - see 'Options' Quote	N/A - see 'Options' Quote	N/A - see 'Options' Quote	N/A - see 'Options' Quote	N/A - see 'Options' Quote	N/A - see 'Options' Quote	$21,194
26	1	1	N	1	1	1	1	1	1	1	1	1	1	1	$29,614
27	1	1	N	1	1	1	1	1	1	1	1	1	1	1	$29,614
28	1	1	N	1	1	1	1	1	1	1	1	1	1	1	$29,614
29	1	1	N	1	1	1	1	1	1	1	1	1	1	1	$29,614
30	1	1	N	1	1	1	1	1	1	1	1	1	1	1	$29,614
31	1	1	N	1	1	1	1	1	1	1	1	1	1	1	$29,614
32	1	1	N	1	1	1	1	1	1	1	1	1	1	1	$29,614
33	1	1	N	1	1	1	1	1	1	1	1	1	1	1	$29,614
34	1	1	N	1	1	1	1	1	1	1	1	1	1	1	$29,614
35	1	1	N	1	1	1	1	1	1	1	1	1	1	1	$29,614
36	1	1	N	1	1	1	1	1	1	1	1	1	1	1	$29,614
37	1	1	N	1	1	1	1	1	1	1	1	1	1	1	$29,614
38	1	1	N	1	1	1	1	1	1	1	1	1	1	1	$29,614
39	1	1	N	1	1	1	1	1	1	1	1	1	1	1	$29,614
40	1	1	N	1	1	1	1	1	1	1	1	1	1	1	$29,614
42	1	1	N	1	1	1	1	1	1	1	1	1	1	1	$29,614

109

43	1	1	N	1	1	1	1	1	1	1	1	1	1	1	1		$29,614
44	1	1	N	1	1	1	1	1	1	1	1	1	1	1	1		$29,614
45	1	1	N	1	1	1	1	1	1	1	1	1	1	1	1		$29,614
46	1	1	N	1	1	1	1	1	1	1	1	1	1	1	1		$29,614
47	1	1	N	1	1	1	1	1	1	1	1	1	1	1	1		$29,614
48	1	1	N	1	1	1	1	1	1	1	1	1	1	1	1		$29,614
49	1	1	N	1	1	1	1	1	1	1	1	1	1	1	1		$29,614
50	1	1	N	1	1	1	1	1	1	1	1	1	1	1	1		$29,614
51	1	1	N	1	1	1	1	1	1	1	1	1	1	1	1		$29,614
52	1	1	N	1	1	1	1	1	1	1	1	1	1	1	1		$29,614
53	1	1	N	1	1	1	1	1	1	1	1	1	1	1	1		$29,614
54	1	1	N	1	1	1	1	1	1	1	1	1	1	1	1		$29,614
55	1	1	N	1	1	1	1	1	1	1	1	1	1	1	1		$29,614
56	1	1	N	1	1	1	1	1	1	1	1	1	1	1	1		$29,614
57	1	1	N	1	1	1	1	1	1	1	1	1	1	1	1		$29,614
58	1	1	N	1	1	1	1	1	1	1	1	1	1	1	1		$29,614
59B	1	1	N	1	1	1	1	1	1	1	1	1	1	1	1		$29,614
59U (Upgrades Req'd Post-RFP)	0	0	Y	N/A - see 'Options' Quote	N/A - see 'Options' Quote	N/A - see 'Options' Quote	N/A - see 'Options' Quote	N/A - see 'Options' Quote	N/A - see 'Options' Quote	N/A - see 'Options' Quote	N/A - see 'Options' Quote	N/A - see 'Options' Quote	N/A - see 'Options' Quote	N/A - see 'Options' Quote	N/A - see 'Options' Quote		$40,391
60	1	1	N	1	1	1	1	1	1	1	1	1	1	1	1		$29,614
61	1	1	N	1	1	1	1	1	1	1	1	1	1	1	1		$29,614
63	1	1	N	1	1	1	1	1	1	1	1	1	1	1	1		$29,614
64 (Requested Post-RFP - Not Previously Included)	1	1	Y	N/A - see 'Options' Quote	N/A - see 'Options' Quote	N/A - see 'Options' Quote	N/A - see 'Options' Quote	N/A - see 'Options' Quote	N/A - see 'Options' Quote	N/A - see 'Options' Quote	N/A - see 'Options' Quote	N/A - see 'Options' Quote	N/A - see 'Options' Quote	N/A - see 'Options' Quote	N/A - see 'Options' Quote		$76,071
65	1	1	N	1	1	1	1	1	1	1	1	1	1	1	1		$29,614
66	1	1	N	1	1	1	1	1	1	1	1	1	1	1	1		$29,614
69	1	1	N	1	1	1	1	1	1	1	1	1	1	1	1		$29,614
70 (Requested Post-RFP - Not Previously Included)	1	1	Y	N/A - see 'Options' Quote	N/A - see 'Options' Quote	N/A - see 'Options' Quote	N/A - see 'Options' Quote	N/A - see 'Options' Quote	N/A - see 'Options' Quote	N/A - see 'Options' Quote	N/A - see 'Options' Quote	N/A - see 'Options' Quote	N/A - see 'Options' Quote	N/A - see 'Options' Quote	N/A - see 'Options' Quote		$73,416
76	1	1	N	1	1	1	1	1	1	1	1	1	1	1	1		$29,614
78	1	1	N	1	1	1	1	1	1	1	1	1	1	1	1		$29,614
DEMO (Requested Post-RFP - Not Previously Included)	1	1	Y	N/A - see 'Options' Quote	N/A - see 'Options' Quote	N/A - see 'Options' Quote	N/A - see 'Options' Quote	N/A - see 'Options' Quote	N/A - see 'Options' Quote	N/A - see 'Options' Quote	N/A - see 'Options' Quote	N/A - see 'Options' Quote	N/A - see 'Options' Quote	N/A - see 'Options' Quote	N/A - see 'Options' Quote		$27,377

110

Memorandum

MIAMI-DADE COUNTY

Date: February 11, 2014

To: Lester Sola
Director
Internal Services Department

Thru: Miriam Singer, CPPO
Assistant Director
Internal Services Department

From: Fred Simmons, Jr., CPPO
Senior Procurement Contracting Officer
Chairperson, Evaluation/Selection Committee

Subject: Report of Evaluation/Selection Committee for RFP No. 899
Fire Station IP Alerting System

The County issued a solicitation to obtain proposals from qualified firms to provide a Fire Station Internet Protocol Alerting System for the Miami-Dade Fire Rescue department.

The Evaluation/Selection Committee has completed the evaluation of proposals submitted in response to the solicitation following the guidelines published in the solicitation.

Committee meeting dates:

- January 22, 2014
- February 4, 2014

Verification of compliance with contract measures:
Not applicable since no contract measures were assigned to this solicitation.

Verification of compliance with minimum qualification requirements:
The solicitation had minimum qualification requirements which were reviewed by the Chairperson and Chief Gregory Rubin of the client department, Miami-Dade Fire Rescue. All of the proposers met the requirements.

The solicitation contained a minimum qualification requirement that personnel completing high voltage wiring of the system/components be licensed.

Local Certified Service-Disabled Veteran's Business Enterprise Preference:
Veteran's Preference was considered in accordance with the applicable ordinance. None of the proposers qualified for the preference.

Summary of scores:

The preliminary scores are as follows:

Pre-Oral Presentations

Proposer	*Technical Score (Max 450)*	*Price Score (Max 50)*	*Total Combined*	*Price Submitted *With Installation **W/O Installation*
US Digital Designs, Inc.	*420*	*47*	*467*	*$2,732,193(*W/I)* *$2,271,188 (**W/O/I)*
Purvis Systems, Inc.	241	29	270	*$3,714,490 (*W/I)* *$3,399,168 (**W/O/I)*

The Evaluation/Selection Committee decided to hold oral presentations.

Post-Oral Presentations

Proposer	*Technical Score (Max. 500)*	*Price Score (Max. 50)*	*Total Combined*	*Price Submitted *With Installation **W/O Installation*
US Digital Designs, Inc.	*444*	*48*	*492*	$2,732,193 (*W/I) $2,271,188 (**WO/I)
Purvis Systems, Inc.	*168*	*26*	*194*	*$3,714,490 (*W/I)* *$3,399,168 (**WO/I)*

Local Preference:
Local Preference was not applicable to this solicitation as the System is being partially funded with a federal grant, which does not allow for geographical preferences.

Other information: N/A

Negotiations:
The Evaluation/Selection Committee recommends that the County enter into negotiations with the highest ranked proposer, US Digital Designs, Inc. The following individuals will participate in the negotiations:

Fred Simmons, Procurement Contracting Officer, ISD
Gregory Rubin, Chief, Communications Division, MDFR
Lisa Jacobs, Fire Communications Officer, MDFR
Marianela Betancourt, Procurement Manager, MDFR
Ray Vaughan, Senior Telecommunications Technician, MDFR
Debbie Neal, Senior Operating Systems Programmer, ITD

Consensus Statement:
The US Digital Designs (USDD) proposal was the highest ranked and best meets the requirements of the solicitation. The Evaluation/Selection Committee unanimously scored USDD highest, based on their past performance, proposed system design (functionality, ease of use and scalability), personnel qualifications, approach to implementation and price.

USDD has successfully deployed 19 fire station alerting systems, all of which are currently in use today. They will incorporate Miami-Dade Fire Rescue's current alerting system method while deploying new technology for monitoring alerting circuits as stipulated by NFPA (National Fire Protection Association) 1221 standards. The proposed system will decrease dispatch times by allowing the dispatcher to notify multiple fire stations simultaneously. The proposed system will also provide rapid, text-to-speech announcements, providing a consistent alerting cadence without any delay. USDD's approach, which includes utilizing the dispatcher's radio console for "over the air" announcements, was determined by the Evaluation/Selection Committee to be consistent with the department's operational needs. This approach is being used successfully in other USDD dispatch system deployments.

USDDs' System allows modifications; such as volume controls, zone configurations, and settings for peripherals, like the LED boards, to be made remotely, saving personnel time, and minimizing system downtime. The system integrates a status interface into an easy to use, web-based platform. This interface, which does not require user licenses or additional work stations, allows MDFR the ability to access all system settings, circuit monitoring, and manual

station alerts from any network connected computer. The station equipment proposed provides easy access for technicians, including a touch screen for on-site interaction, and redundant system settings that are stored locally for rapid recovery and minimal downtime. The proposed system offers escalating audible alerting in the fire station that decreases the startling effect when fire personnel are being alerted to calls. Additionally, the proposed system will provide a zone-based solution so only those personnel who are required to respond are alerted. The USDD system is easily installed, requiring only low voltage, and uses a single data wire to peripherals such as message boards, speakers, lights and timers.

The system proposed by USDD offers the County a service proven solution that is flexible, and scalable to meet MDFR's current and future needs.

Copies of the score sheets are attached for each Evaluation/Selection Committee, as well as a composite score sheet.

Approved

Lester Sola
Director

2/12/14
Date

REVIEW OF PROPOSALS
RFP No. 899 - Post Orals
Fire Station IP Alerting Systems for Miami-Dade Fire Rescue
Composite

SELECTION PROPOSERS CRITERIA	Maximum Points Per Member	Maximum Total Points (5 members)	US Digital Design Inc	PURVIS Systems Inc
Proposer's relevant experience, qualifications, and past performance.	10	50	50	14
The Proposed System - System components, equipment and materials: 1) functionality; meets requirements of RFP 2) ease of use 3) scalability	50	250	250	70
Relevant experience and qualifications of key personnel, including key personnel of subcontractors, that will be assigned to this project, and experience and qualifications of subcontractors	10	50	48	35
Proposer's approach to providing the product and services requested in this Solicitation a) Project and Installation Schedule b) Testing c) Training	20	100	96	49
Technical Points (Total of Technical rows above)	90	450	444	168
Price Criteria: Proposer's proposed price a) Equipment and materials b) Installation c) Professional services a. project management b. training	10	50	48	26
TOTAL POINTS (Technical & Price)	100	500	492	194

SIGNATURE: Fred Simmons Jr

Chairperson

Reviewed By

PRINT NAME: FRED Simmons Jr

Allan M. Garcia

DATE: 2-5-14

2-5-14

REVIEW OF PROPOSALS
RFP No. 899 - Post Orals
Fire Station IP Alerting Systems for Miami-Dade Fire Rescue
Gregory Rubin (MDFR)

ELECTION → PROPOSERS CRITERIA	Maximum Points	US Digital Design Inc	PURVIS Systems Inc
roposer's relevant experience, qualifications, and past performance.	10	10	1
ne Proposed System - System components, equipment and materials: l) functionality; meets requirements of RFP 2) ease of use 3) scalability	50	50	10
elevant experience and qualifications of key personnel, including key ersonnel of subcontractors, that will be assigned to this roject, and experience and qualifications of subcontractors	10	10	7
roposer's approach to providing the product and services requested in is Solicitation) Project and Installation Schedule) Testing) Training	20	18	10
chnical Points (Total of Technical rows above)	90	88	28
Price Criteria: Proposer's proposed price a) Equipment and materials b) Installation c) Professional services a. project management b. training	10	9	7
TOTAL POINTS (Technical & Price)	100	97	35

115

GNATURE

DATE

REVIEW OF PROPOSALS
RFP No. 899 - Post Orals
Fire Station IP Alerting Systems for Miami-Dade Fire Rescue
Lisa Jacobs (MDFR)

LECTION — PROPOSERS CRITERIA	Maximum Points	US Digital Design Inc	PURVIS Systems Inc
oposer's relevant experience, qualifications, and past performance.	10	10	2
e Proposed System - System components, equipment and materials:) functionality; meets requirements of RFP) ease of use) scalability	50	50	15
elevant experience and qualifications of key personnel, including key rsonnel of subcontractors, that will be assigned to this oject, and experience and qualifications of subcontractors	10	9	6
oposer's approach to providing the product and services requested in s Solicitation Project and Installation Schedule Testing Training	20	20	8
chnical Points (Total of Technical rows above)	90	89	31
Price Criteria:Proposer's proposed price a) Equipment and materials b) Installation c) Professional services a. project management b. training	10	9	4
TOTAL POINTS (Technical & Price)	100	98	35

SNATURE

DATE

116

REVIEW OF PROPOSALS
RFP No. 899 - Post Orals
Fire Station IP Alerting Systems for Miami-Dade Fire Rescue
Debbie Neal (ITD)

ELECTION PROPOSERS CRITERIA	Maximum Points	US Digital Design Inc	PURVIS Systems Inc
'roposer's relevant experience, qualifications, and past performance.	10	10	6
he Proposed System - System components, equipment and materials: 1) functionality; meets requirements of RFP 2) ease of use 3) scalability	50	50	15
lelevant experience and qualifications of key personnel, including key ersonnel of subcontractors, that will be assigned to this roject, and experience and qualifications of subcontractors	10	10	8
'roposer's approach to providing the product and services requested in ıis Solicitation ı) Project and Installation Schedule ɔ) Testing :) Training	20	20	15
echnical Points (Total of Technical rows above)	90	90	44
Price Criteria: Proposer's proposed price a) Equipment and materials b) Installation c) Professional services a. project management b. training	10	10	6
TOTAL POINTS (Technical & Price)	100	100	50

IGNATURE

DATE

REVIEW OF PROPOSALS
RFP No. 899 - Post Orals
Fire Station IP Alerting Systems for Miami-Dade Fire Rescue
Karla Morgalo (ITD)

LECTION — PROPOSERS CRITERIA	Maximum Points	US Digital Design Inc	PURVIS Systems Inc
oposer's relevant experience, qualifications, and past performance.	10	10	3
e Proposed System - System components, equipment and materials:) functionality; meets requirements of RFP) ease of use) scalability	50	50	15
levant experience and qualifications of key personnel, including key rsonnel of subcontractors, that will be assigned to this oject, and experience and qualifications of subcontractors	10	10	5
oposer's approach to providing the product and services requested in is Solicitation Project and Installation Schedule Testing Training	20	18	6
chnical Points (Total of Technical rows above)	90	88	29
Price Criteria: Proposer's proposed price a) Equipment and materials b) Installation c) Professional services a. project management b. training	10	10	4
TOTAL POINTS (Technical & Price)	100	98	33

118

GNATURE

DATE

REVIEW OF PROPOSALS
RFP No. 899 - Post Orals
Fire Station IP Alerting Systems for Miami-Dade Fire Rescue
Ronald Sliman (MDPD)

LECTION PROPOSERS CRITERIA	Maximum Points	US Digital Design Inc	PURVIS Systems Inc
oposer's relevant experience, qualifications, and past performance.	10	10	2
ıe Proposed System - System components, equipment and materials:) functionality; meets requirements of RFP) ease of use) scalability	50	50	15
ɜlevant experience and qualifications of key personnel, including key ɜrsonnel of subcontractors, that will be assigned to this oject, and experience and qualifications of subcontractors	10	9	9
oposer's approach to providing the product and services requested in is Solicitation Project and Installation Schedule Testing Training	20	20	10
chnical Points (Total of Technical rows above)	90	89	36
Price Criteria: Proposer's proposed price a) Equipment and materials b) Installation c) Professional services a. project management b. training	10	10	5
TOTAL POINTS (Technical & Price)	100	99	41

119

ɜNATURE

DATE

REVIEW OF PROPOSALS
RFP No. 899 - Post Orals
Fire Station IP Alerting Systems for Miami-Dade Fire Rescue
Gregory Rubin (MDFR)

ECTION — PROPOSERS CRITERIA	Maximum Points	US Digital Design Inc	PURVIS Systems Inc
poser's relevant experience, qualifications, and past performance.	10	10	1
Proposed System - System components, equipment and materials: functionality; meets requirements of RFP ease of use scalability	50	50	10
evant experience and qualifications of key personnel, including key sonnel of subcontractors, that will be assigned to this ect, and experience and qualifications of subcontractors	10	10	7
poser's approach to providing the product and services requested in Solicitation Project and Installation Schedule Testing Training	20	18	10
nical Points (Total of Technical rows above)	90	0 88	0
Price Criteria:Proposer's proposed price a) Equipment and materials b) Installation c) Professional services a. project management b. training	10	9	7
TOTAL POINTS (Technical & Price)	100	0 97	0 35

ATURE

4 Feb 14
DATE

120

REVIEW OF PROPOSALS
RFP No. 899 - Post Orals
Fire Station IP Alerting Systems for Miami-Dade Fire Rescue
Lisa Jacobs (MDFR)

ECTION — PROPOSERS CRITERIA	Maximum Points	US Digital Design Inc	PURVIS Systems Inc
poser's relevant experience, qualifications, and past performance.	10	10	2
Proposed System - System components, equipment and materials: functionality; meets requirements of RFP ease of use scalability	50	50	15
vant experience and qualifications of key personnel, including key onnel of subcontractors, that will be assigned to this ect, and experience and qualifications of subcontractors	10	9	6
poser's approach to providing the product and services requested in Solicitation Project and Installation Schedule Testing Training	20	20	8
nical Points (Total of Technical rows above)	90	0	0
Price Criteria: Proposer's proposed price a) Equipment and materials b) Installation c) Professional services a. project management b. training	10	9	4
TOTAL POINTS (Technical & Price)	100	0	0

TURE

2/4/14
DATE

REVIEW OF PROPOSALS
RFP No. 899 - Post Orals
Fire Station IP Alerting Systems for Miami-Dade Fire Rescue
Debbie Neal (ITD)

ECTION — PROPOSERS CRITERIA	Maximum Points	US Digital Design Inc	PURVIS Systems Inc
poser's relevant experience, qualifications, and past performance.	10	10	6
Proposed System - System components, equipment and materials: functionality; meets requirements of RFP ease of use scalability	50	50	15
evant experience and qualifications of key personnel, including key sonnel of subcontractors, that will be assigned to this ect, and experience and qualifications of subcontractors	10	10	8
poser's approach to providing the product and services requested in Solicitation Project and Installation Schedule Testing Training	20	20	15
nical Points (Total of Technical rows above)	90	0	0
Price Criteria: Proposer's proposed price a) Equipment and materials b) Installation c) Professional services a. project management b. training	10	10	6
TOTAL POINTS (Technical & Price)	100	0	0

ATURE

2-4-2014
DATE

REVIEW OF PROPOSALS
RFP No. 899 - Post Orals
Fire Station IP Alerting Systems for Miami-Dade Fire Rescue
Karla Morgalo (ITD)

CTION → PROPOSERS CRITERIA	Maximum Points	US Digital Design Inc	PURVIS Systems Inc
oser's relevant experience, qualifications, and past performance.	10	10	3
Proposed System - System components, equipment and materials: unctionality; meets requirements of RFP ase of use calability	50	50	15
vant experience and qualifications of key personnel, including key onnel of subcontractors, that will be assigned to this ct, and experience and qualifications of subcontractors	10	10	5
oser's approach to providing the product and services requested in Solicitation Project and Installation Schedule Testing Training	20	18	6
ical Points (Total of Technical rows above)	90	0 88	0
Price Criteria: Proposer's proposed price a) Equipment and materials b) Installation c) Professional services a. project management b. training	10	10	4
TOTAL POINTS (Technical & Price)	100	0 98	0

ATURE

KARLA MORGALO

2-4-14
DATE

REVIEW OF PROPOSALS
RFP No. 899 - Post Orals
Fire Station IP Alerting Systems for Miami-Dade Fire Rescue
Ronald Sliman (MDPD)

ECTION → PROPOSERS CRITERIA	Maximum Points	US Digital Design Inc	PURVIS Systems Inc
oser's relevant experience, qualifications, and past performance.	10	10	~~4~~ 2 PS
Proposed System - System components, equipment and materials: unctionality; meets requirements of RFP ase of use calability	50	50	15
vant experience and qualifications of key personnel, including key onnel of subcontractors, that will be assigned to this ect, and experience and qualifications of subcontractors	10	9	9
oser's approach to providing the product and services requested in Solicitation roject and Installation Schedule esting raining	20	20	10
ical Points (Total of Technical rows above)	90	89 0	36 0
Price Criteria: Proposer's proposed price a) Equipment and materials b) Installation c) Professional services a. project management b. training	10	10	5
TOTAL POINTS (Technical & Price)	100	99 0	41 0

RJ

TURE

2-4-14
DATE

REVIEW OF PROPOSALS
RFP No. 899
Fire Station IP Alerting Systems for Miami-Dade Fire Rescue
Composite

SELECTION — PROPOSERS CRITERIA	Maximum Points per Member	Maximum Total Points (5 members)	US Digital Design Inc	PURVIS Systems Inc
Proposer's relevant experience, qualifications, and past performance.	10	50	50	20
The Proposed System - System components, equipment and materials: 1) functionality; meets requirements of RFP 2) ease of use 3) scalability	50	250	233	135
Relevant experience and qualifications of key personnel, including key personnel of subcontractors, that will be assigned to this project, and experience and qualifications of subcontractors	10	50	44	33
Proposer's approach to providing the product and services requested in this Solicitation a) Project and Installation Schedule b) Testing c) Training	20	100	93	53
Technical Points (Total of Technical rows above)	90	450	420	241
Price Criteria: Proposer's proposed price a) Equipment and materials b) Installation c) Professional services a. project management b. training	10	50	47	29
TOTAL POINTS (Technical & Price)	100	500	467	270

SIGNATURE: Fred Simmons Jr
Chairperson

Reviewed By: Agarcia

PRINT NAME: FRED Simmons Jr
Allan M. Garcia

DATE: 1/22/14
1/22/14

REVIEW OF PROPOSALS
RFP No. 899
Fire Station IP Alerting Systems for Miami-Dade Fire Rescue
Gregory Rubin (MDFR)

SELECTION → PROPOSERS CRITERIA	Maximum Points	US Digital Design Inc	PURVIS Systems Inc
Proposer's relevant experience, qualifications, and past performance.	10	10	1
The Proposed System - System components, equipment and materials: 1) functionality; meets requirements of RFP 2) ease of use 3) scalability	50	50	20
Relevant experience and qualifications of key personnel, including key personnel of subcontractors, that will be assigned to this project, and experience and qualifications of subcontractors	10	8	4
Proposer's approach to providing the product and services requested in this Solicitation a) Project and Installation Schedule b) Testing c) Training	20	18	10
Technical Points (Total of Technical rows above)	90	86	35
Price Criteria: Proposer's proposed price a) Equipment and materials b) Installation c) Professional services a. project management b. training	10	9	5
TOTAL POINTS (Technical & Price)	100	95	40

SIGNATURE

DATE

REVIEW OF PROPOSALS
RFP No. 899
Fire Station IP Alerting Systems for Miami-Dade Fire Rescue
Lisa Jacobs (MDFR)

SELECTION — PROPOSERS CRITERIA	Maximum Points	US Digital Design Inc	PURVIS Systems Inc
Proposer's relevant experience, qualifications, and past performance.	10	10	5
The Proposed System - System components, equipment and materials: 1) functionality; meets requirements of RFP 2) ease of use 3) scalability	50	48	25
Relevant experience and qualifications of key personnel, including key personnel of subcontractors, that will be assigned to this project, and experience and qualifications of subcontractors	10	9	6
Proposer's approach to providing the product and services requested in this Solicitation a) Project and Installation Schedule b) Testing c) Training	20	18	8
Technical Points (Total of Technical rows above)	90	85	44
Price Criteria: Proposer's proposed price a) Equipment and materials b) Installation c) Professional services a. project management b. training	10	9	5
TOTAL POINTS *(Technical & Price)*	100	94	49

SIGNATURE

DATE

REVIEW OF PROPOSALS
RFP No. 899
Fire Station IP Alerting Systems for Miami-Dade Fire Rescue
Debbie Neal (ITD)

SELECTION ↓ — PROPOSERS CRITERIA	Maximum Points	US Digital Design Inc	PURVIS Systems Inc
Proposer's relevant experience, qualifications, and past performance.	10	10	6
The Proposed System - System components, equipment and materials: 1) functionality; meets requirements of RFP 2) ease of use 3) scalability	50	40	30
Relevant experience and qualifications of key personnel, including key personnel of subcontractors, that will be assigned to this project, and experience and qualifications of subcontractors	10	10	9
Proposer's approach to providing the product and services requested in this Solicitation a) Project and Installation Schedule b) Testing c) Training	20	20	15
Technical Points *(Total of Technical rows above)*	90	80	60
Price Criteria:Proposer's proposed price a) Equipment and materials b) Installation c) Professional services a. project management b. training	10	10	8
TOTAL POINTS *(Technical & Price)*	100	90	68

SIGNATURE _____ DATE _____

REVIEW OF PROPOSALS
RFP No. 899
Fire Station IP Alerting Systems for Miami-Dade Fire Rescue
Karla Morgalo (ITD)

SELECTION → PROPOSERS CRITERIA ↓	Maximum Score	US Digital Design Inc	PURVIS Systems Inc
Proposer's relevant experience, qualifications, and past performance.	10	10	6
The Proposed System - System components, equipment and materials: 1) functionality; meets requirements of RFP 2) ease of use 3) scalability	50	50	40
Relevant experience and qualifications of key personnel, including key personnel of subcontractors, that will be assigned to this project, and experience and qualifications of subcontractors	10	8	5
Proposer's approach to providing the product and services requested in this Solicitation a) Project and Installation Schedule b) Testing c) Training	20	17	10
Technical Points (Total of Technical rows above)	90	85	61
Price Criteria:Proposer's proposed price a) Equipment and materials b) Installation c) Professional services a. project management b. training	10	9	6
TOTAL POINTS (Technical & Price)	100	94	67

SIGNATURE

DATE

REVIEW OF PROPOSALS
RFP No. 899
Fire Station IP Alerting Systems for Miami-Dade Fire Rescue
Ronald Silman (MDPD)

SELECTION ↓ → PROPOSERS CRITERIA	Maximum Points	US Digital Design Inc	PURVIS Systems Inc
Proposer's relevant experience, qualifications, and past performance.	10	10	2
The Proposed System - System components, equipment and materials: 1) functionality; meets requirements of RFP 2) ease of use 3) scalability	50	45	20
Relevant experience and qualifications of key personnel, including key personnel of subcontractors, that will be assigned to this project, and experience and qualifications of subcontractors	10	9	9
Proposer's approach to providing the product and services requested in this Solicitation a) Project and Installation Schedule b) Testing c) Training	20	20	10
Technical Points (Total of Technical rows above)	90	84	41
Price Criteria: Proposer's proposed price a) Equipment and materials b) Installation c) Professional services a. project management b. training	10	10	5
TOTAL POINTS (Technical & Price)	100	94	46

SIGNATURE _____ DATE _____

REVIEW OF PROPOSALS
RFP No. 899
Fire Station IP Alerting Systems for Miami-Dade Fire Rescue
Composite

SELECTION PROPOSERS CRITERIA	Maximum Points Per Member	Maximum Total Points (5 Members)	US Digital Design Inc	PURVIS Systems Inc
Proposer's relevant experience, qualifications, and past performance.	10	50	50	20
The Proposed System - System components, equipment and materials: 1) functionality; meets requirements of RFP 2) ease of use 3) scalability	50	250	233	135
Relevant experience and qualifications of key personnel, including key personnel of subcontractors, that will be assigned to this project, and experience and qualifications of subcontractors	10	50	44	33
Proposer's approach to providing the product and services requested in this Solicitation a) Project and Installation Schedule b) Testing c) Training	20	100	93	53
Technical Points (Total of Technical rows above)	90	450	420	241
Price Criteria: Proposer's proposed price a) Equipment and materials b) Installation c) Professional services a. project management b. training	10	50	47	29
TOTAL POINTS (Technical & Price)	100	500	467	270

SIGNATURE: Fred Simmons Jr
Chairperson

Reviewed By Agarc

PRINT NAME: FRED Simmons Jr DATE: 1/22/14

Allan M. Garcia 1/22/14

REVIEW OF PROPOSALS
RFP No. 899
Fire Station IP Alerting Systems for Miami-Dade Fire Rescue
Gregory Rubin (MDFR)

SELECTION → PROPOSERS CRITERIA	Maximum Points	US Digital Design Inc	PURVIS Systems Inc
Proposer's relevant experience, qualifications, and past performance.	10	10	1
The Proposed System - System components, equipment and materials: 1) functionality; meets requirements of RFP 2) ease of use 3) scalability	50	50	20
Relevant experience and qualifications of key personnel, including key personnel of subcontractors, that will be assigned to this project, and experience and qualifications of subcontractors	10	8	4
Proposer's approach to providing the product and services requested in this Solicitation a) Project and Installation Schedule b) Testing c) Training	20	18	10
Technical Points (Total of Technical rows above)	90	0	0
Price Criteria: Proposer's proposed price a) Equipment and materials b) Installation c) Professional services a. project management b. training	10	9	5
TOTAL POINTS (Technical & Price)	100	0	0

SIGNATURE

21 Jan 14
DATE

REVIEW OF PROPOSALS
RFP No. 899
Fire Station IP Alerting Systems for Miami-Dade Fire Rescue
Lisa Jacobs (MDFR)

SELECTION PROPOSERS CRITERIA	Maximum Points	US Digital Design Inc	PURVIS Systems Inc
Proposer's relevant experience, qualifications, and past performance.	10	10	5
The Proposed System - System components, equipment and materials: 1) functionality; meets requirements of RFP 2) ease of use 3) scalability	50	48	25
Relevant experience and qualifications of key personnel, including key personnel of subcontractors, that will be assigned to this project, and experience and qualifications of subcontractors	10	9	6
Proposer's approach to providing the product and services requested in this Solicitation a) Project and installation Schedule b) Testing c) Training	20	18	8
Technical Points (Total of Technical rows above)	90	0	0
Price Criteria: Proposer's proposed price a) Equipment and materials b) Installation c) Professional services a. project management b. training	10	9	5
TOTAL POINTS (Technical & Price)	100	94 0	49 0

Lisa Jacobs
SIGNATURE
Lisa Jacobs

11/21/14
DATE

REVIEW OF PROPOSALS
RFP No. 899
Fire Station IP Alerting Systems for Miami-Dade Fire Rescue
Debbie Neal (ITD)

SELECTION PROPOSERS CRITERIA	Maximum Points	US Digital Design Inc	PURVIS Systems Inc
Proposer's relevant experience, qualifications, and past performance.	10	10	6
The Proposed System - System components, equipment and materials: 1) functionality; meets requirements of RFP 2) ease of use 3) scalability	50	40	30
Relevant experience and qualifications of key personnel, including key personnel of subcontractors, that will be assigned to this project, and experience and qualifications of subcontractors	10	10	9
Proposer's approach to providing the product and services requested in this Solicitation a) Project and Installation Schedule b) Testing c) Training	20	20	15
Technical Points (Total of Technical rows above)	90	0	0
Price Criteria: Proposer's proposed price a) Equipment and materials b) Installation c) Professional services a. project management b. training	10	10	8
TOTAL POINTS (Technical & Price)	100	90	68 0

SIGNATURE

1-21-13
DATE

REVIEW OF PROPOSALS
RFP No. 899
Fire Station IP Alerting Systems for Miami-Dade Fire Rescue
Karla Morgalo (ITD)

SELECTION PROPOSERS CRITERIA	Maximum Points	US Digital Design Inc	PURVIS Systems Inc
Proposer's relevant experience, qualifications, and past performance.	10	10	6
The Proposed System - System components, equipment and materials: 1) functionality; meets requirements of RFP 2) ease of use 3) scalability	50	50	40
Relevant experience and qualifications of key personnel, including key personnel of subcontractors, that will be assigned to this project, and experience and qualifications of subcontractors	10	8	5
Proposer's approach to providing the product and services requested in this Solicitation a) Project and Installation Schedule b) Testing c) Training	20	17	10
Technical Points (Total of Technical rows above)	90	0	0
Price Criteria: Proposer's proposed price a) Equipment and materials b) Installation c) Professional services a. project management b. training	10	9	6
TOTAL POINTS (Technical & Price)	100	0	0

SIGNATURE

KARLA MORGALO

1-21-14
DATE

REVIEW OF PROPOSALS
RFP No. 899
Fire Station IP Alerting Systems for Miami-Dade Fire Rescue
Ronald Sliman (MDPD)

SELECTION ↓ — PROPOSERS CRITERIA	Maximum Points	US Digital Design Inc	PURVIS Systems Inc
Proposer's relevant experience, qualifications, and past performance.	10	10	2
The Proposed System - System components, equipment and materials: 1) functionality; meets requirements of RFP 2) ease of use 3) scalability	50	45	20
Relevant experience and qualifications of key personnel, including key personnel of subcontractors, that will be assigned to this project, and experience and qualifications of subcontractors	10	9	9
Proposer's approach to providing the product and services requested in this Solicitation a) Project and Installation Schedule b) Testing c) Training	20	20	10
Technical Points (Total of Technical rows above)	90	0	0
Price Criteria: Proposer's proposed price a) Equipment and materials b) Installation c) Professional services a. project management b. training	10	10	5
TOTAL POINTS (Technical & Price)	100	0	0

SIGNATURE

1-21-2014
DATE

136

Memorandum

MIAMI-DADE COUNTY

Date: January 13, 2014

To: Those Listed Below

From: Carlos A. Gimenez
Mayor

Subject: Appointment of Selection Committee for Miami-Dade Fire Rescue Department Request for Proposal (RFP) for Fire Station IP Alerting System – RFP No. 899

In accordance with Administrative Order 3-34, I am hereby appointing those listed below as the Selection Committee for Miami-Dade Fire Rescue Department Request for Proposal (RFP) for Fire Station IP Alerting System – RFP No. 899

Selection Committee
Fred Simmons, ISD (Non-Voting Chairperson)
Gregory Rubin, MDFR
Lisa Jacobs, MDFR
Debbie Neal, ITD
Karla Morgalo, ITD
Ronald Sliman, MDPD
Louie Fernandez, MDFR (Alternate)

Technical Advisors
Ray Vaughan, ITD
Marianela Betancourt, MDFR

You are directed to assist me in the selection process considering the factors delineated in the solicitation. If you are unable to participate in the selection process, contact this office through Small Business Development (SBD) by memorandum from your department director documenting the reason why you cannot participate. Only in cases of **dire** urgency may you be excused from participation.

Each Selection Committee member shall be responsible for evaluating, rating and ranking the proposals based on the criteria and procedure contained in the solicitation. The Selection Committee will meet to review the written proposals. If required, the Selection Committee will select firms to make oral presentations to the Selection Committee at a properly noticed public hearing. If proposers are invited to make oral presentations, the Selection Committee may re-rate and re-rank the proposals based upon the written documents combined with the oral presentation. You may utilize staff of the issuing department and the using agency to conduct a preliminary review of the proposals for responsiveness. All requests for responsiveness determinations shall be made in writing by the issuing department to the County Attorney's Office.

The alternate committee member will serve only in the event of an approved substitution. No substitution of committee members shall be allowed after the first official meeting of the committee. The Internal Services Department (ISD) may substitute the chairperson to ensure the appropriate level of staffing expertise as deemed necessary to accommodate the needs of this solicitation.

Upon completion of the evaluation process, the Selection Committee Chairperson shall prepare and submit a memorandum to include a narrative of the evaluation and justification of the recommended firm(s) and attach supporting documentation which MUST include the following information:

Name of firm(s)
Quality Rating Score
Price
Adjusted Score (if applicable)
Committee's Overall Ranking

This report should be submitted to me through ISD for review and consideration.

As a matter of administrative policy and to maintain a fair and impartial process, all individuals appointed to the Selection Committee (including the Chairperson) and staff are instructed to refrain from discussing the solicitation with prospective lobbyists and/or consultants. Selection Committee members are reminded that in accordance with the Cone of Silence Ordinance 98-106, there are restrictions on communications regarding the solicitation with potential proposers, service providers, lobbyists, consultants, or any member of the County's professional staff. Violation of this policy could lead to termination of County service.

All questions must be directed to the staff contact person designated by the issuing department.

c: Lester Sola, Director, ISD
David C. Downey, Fire Chief, MDFR
Angel Petisco, Director, ITD
J. D. Patterson, Jr., Director, MDPD
Gary T. Hartfield, SBD Division Director, ISD

Selection Committee
Fred Simmons, ISD (Non-Voting Chairperson)
Gregory Rubin, MDFR
Lisa Jacobs, MDFR
Debbie Neal, ITD
Karla Morgalo, ITD
Ronald Sliman, MDPD
Louie Fernandez, MDFR (Alternate)

Technical Advisors
Ray Vaughan, ITD
Marianela Betancourt, MDFR

SELECTION COMMITTEE
MIAMI-DADE FIRE RESCUE DEPARTMENT
REQUEST FOR PROPOSALS
FIRE STATION IP ALERTING SYSTEM

RFP NO. 899

Committee Member/ Title	Department	Start Year With County	Ethnicity/ Gender	Education	Professional License(s)/ Certification(s)	Telephone
Fred Simmons (Non-Voting Chairperson)	ISD	---	---	---	---	305-375-425
Gregory Rubin Chief, Communications Divisions	MDFR	1998	White Male	Master's in Public Administration; Bachelor of Science in Nursing and Psychology	State of Florida Registered Nurse; State of Florida Paramedic; FCC Amateur Radio License	786-336-670
Lisa Jacobs Fire Communications Officer	MDFR	1989	White Female	Associate in Arts	State of Florida Public Safety Telecommunicator; FCC Amateur Radio	786-336-670
Debbie Neal Senior Operating Systems Programmer	ITD	1985	Black Female	Bachelor of Science in Business Data Processing	--	305-596-843
Karla Morgalo Systems Administrator II	ITD	1992	Hispanic Female	Associate in Arts	---	305-596-826
Ronald Sliman Police Lieutenant	MDPD	1988	White Male	High School	---	305-669-773
Louie Fernandez Chief of Staff (Alternate)	MDFR	1987	Hispanic Male	Bachelor's in Public Administration	---	305-375-122
TECHNICAL ADVISORS						
Ray Vaughan Senior Telecommunications Technician	ITD	1993	White Male	Master's in Telecommunication Management	FCC General Radio Telephone License	786-336-673
Marianela Betancourt Procurement Manager	MDFR	1999	Hispanic Female	Bachelor's in Public Administration	Human Resource Management; Universal Public Procurement Certification Council; Certified Professional Public Buyer (CPPB)	786-331-424