OFFICIAL FILE COPY
CLERK OF THE BOARD
OF COUNTY COMMISSIONERS
MIAMI-DADE COUNTY, FLORIDA

Memorandum

MIAMI-DADE COUNTY

Agenda Item No. 5(F)

Date: March 3, 2015

To: Honorable Chairman Jean Monestime
and Members, Board of County Commissioners

From: Carlos A. Gimenez
Mayor

Subject: Class I Permit Application by the University of Miami to Construct a Pedestrian Bridge, a Vehicular Bridge, and to Dredge and Fill Tidal Waters to Construct a Driveway, all of which will Span an Artificial Canal on the Main Campus of the University of Miami in the City of Coral Gables, Florida

Resolution No. R-199-15

Attached, please find for your consideration an application by the University of Miami for a Class I permit. Also attached is the recommendation of the Department of Regulatory and Economic Resources, Division of Environmental Resources Management (RER-DERM) and a proposed resolution approving the issuance of the Class I permit.

Jack Osterholt, Deputy Mayor

Memorandum

MIAMI-DADE COUNTY

Date: February 17, 2015

To: Carlos A. Gimenez
Mayor

From: Jack Osterholt, Deputy Mayor/Director
Department of Regulatory and Economic Resources

Subject: Class I Permit Application by the University of Miami to Construct a Pedestrian Bridge, a Vehicular Bridge, and to Dredge and Fill Tidal Waters to Construct a Driveway, all of which will Span an Artificial Canal in the City of Coral Gables, Florida

---

Recommendation

I have reviewed the attached application for a Class I permit by the University of Miami. Based upon the applicable evaluation factors set forth in Section 24-48.3 of the Code of Miami-Dade County (Code), I recommend that the Board of County Commissioners (Board) approve the issuance of a Class I permit for the reasons set forth below.

Scope

The sites are located at 5665 Ponce de Leon Boulevard and 1239 Dickenson Drive on the University of Miami main campus, Coral Gables, in Commission District 7, which is represented by Commissioner Xavier L. Suarez.

Fiscal Impact/Funding Source

This resolution is a regulatory approval and does not have a fiscal impact, as contemplated by R-530-10.

Track Record/Monitor

The Natural Resources Division Chief, Lisa Spadafina, in the Department of Regulatory and Economic Resources, Division of Environmental Resources Management (RER-DERM), will be responsible for monitoring the proposed permit.

Background

This Class I permit application requests authorization to construct a pedestrian bridge and a vehicular bridge, and to dredge and fill tidal waters to construct a driveway, each of which will span a tidally connected artificial canal on the University of Miami main campus in the City of Coral Gables. The proposed project is required to be reviewed and approved by the Board at a public hearing because the scope of work is specifically referenced in Section 24-48.2 of the Code as work that shall be processed as a standard form application. Therefore, a standard form application including a public hearing is required.

The proposed project site is located at the southwest end of the University of Miami main campus, north of Ponce de Leon Boulevard, in the vicinity of the UHealth Gables Medical Center Project (Medical Center). The new bridges and driveway will provide connectivity between the buildings on opposite sides of the canal and facilitate pedestrian and vehicular access to the parking garages, patient drop off area, and valet parking stations for the Medical Center. The installation of the driveway will also provide a separate route for Medical Center traffic to access the facility that will minimize the use of Ponce de Leon Boulevard.

The installation of the proposed driveway will include backfilling and paving of an 871 square foot portion of the canal located immediately north of Ponce de Leon Boulevard. A culvert system that extends underneath Ponce de Leon Boulevard to maintain connectivity along the canal currently exists in the area of the proposed filling. As part of the proposed work, the culvert system will be extended further north into the canal in order to accommodate the driveway while maintaining water flow. The proposed project does not comply with the dredge and fill criteria specified in Section 24-48.3 of the Code. Therefore, the applicant requested a variance from the Environmental Quality Control Board (Attachment E) to the Code, which was granted on September 10, 2014.

The university also proposes to construct a new 12 foot wide by 122 foot long pedestrian bridge and a new 35 foot wide by 95 foot long vehicular bridge to provide direct access between the buildings on the west side of the canal with those on the east side of the canal. Both bridges will be supported on the uplands and will not involve any filling of tidal waters.

Pursuant to Section 24-48.4 of the Code, potential adverse environmental impacts and cumulative adverse environmental impacts for a proposed project must be avoided and minimized. The shoreline does not support wetland vegetation, and no submerged aquatic vegetation was documented in the footprint of the proposed structures. In addition, the Class I permit will include conditions requiring erosion and turbidity control devices during all phases of construction to ensure compliance with State and County water quality standards. Therefore, the proposed project is not reasonably expected to result in adverse environmental impacts.

The proposed project is not located within an area designated as essential manatee habitat by the Miami-Dade County Manatee Protection Plan. Furthermore, the project site is tidally connected through a series of culverts with incorporated grate systems that restrict manatee access to the canal. Therefore, the proposed project is not reasonably expected to adversely impact manatees.

The proposed project has been designed in accordance with all relevant Miami-Dade County coastal construction criteria and is consistent with all Miami-Dade County coastal protection provisions. Please find attached a RER-DERM Project Report which sets forth the reasons the proposed project is recommended for approval pursuant to the applicable evaluation factors set forth in Section 24-48.3 and of the Code. The conditions, limitations, and restrictions set forth in the Project Report attached hereto are incorporated herein by references hereto.

Attachments

Attachment A:	Class I Permit Application
Attachment B:	Owner/Agent Letter, Engineer Certification Letter, and Project Sketches
Attachment C:	Zoning Memorandum
Attachment D:	Names and Addresses of Owners of all Riparian Property within Three Hundred (300) Feet of the Proposed Work
Attachment E:	Environmental Quality Control Board Order No. 14-51
Attachment F:	RER-DERM Project Report

MEMORANDUM
(Revised)

TO: Honorable Chairman Jean Monestime
and Members, Board of County Commissioners

DATE: March 3, 2015

FROM: R. A. Cuevas, Jr.
County Attorney

SUBJECT: Agenda Item No. 5(F)

Please note any items checked.

_____ **"3-Day Rule" for committees applicable if raised**

_____ **6 weeks required between first reading and public hearing**

_____ **4 weeks notification to municipal officials required prior to public hearing**

_____ **Decreases revenues or increases expenditures without balancing budget**

_____ **Budget required**

_____ **Statement of fiscal impact required**

_____ **Ordinance creating a new board requires detailed County Mayor's report for public hearing**

✓ **No committee review**

_____ **Applicable legislation requires more than a majority vote (i.e., 2/3's ____, 3/5's ____, unanimous _____) to approve**

_____ **Current information regarding funding source, index code and available balance, and available capacity (if debt is contemplated) required**

Approved _____ Mayor
Veto _____
Override _____

Agenda Item No. 5(F)
3-3-15

RESOLUTION NO. R-199-15

RESOLUTION APPROVING A CLASS I PERMIT APPLICATION BY THE UNIVERSITY OF MIAMI TO CONSTRUCT A PEDESTRIAN BRIDGE AND A VEHICULAR BRIDGE, AND TO DREDGE AND FILL TIDAL WATERS TO CONSTRUCT A DRIVEWAY, ALL OF WHICH WILL SPAN AN ARTIFICIAL CANAL ON THE MAIN CAMPUS OF THE UNIVERSITY OF MIAMI IN THE CITY OF CORAL GABLES, MIAMI-DADE COUNTY, FLORIDA

WHEREAS, the Board desires to accomplish the purposes outlined in the accompanying memorandum, a copy of which is incorporated herein by reference,

NOW, THEREFORE, BE IT RESOLVED BY THE BOARD OF COUNTY COMMISSIONERS OF MIAMI-DADE COUNTY, FLORIDA, that this Board having considered all the applicable factors contained within Section 24-48.3 of the Code of Miami-Dade County, hereby approves the application by the University of Miami for a Class I permit to construct a pedestrian bridge and a vehicular bridge, and to dredge and fill tidal waters to construct a driveway, all of which will span an artificial canal on the main campus of the University of Miami, Coral Gables, Miami-Dade County, subject to the conditions set forth in the memorandum from the Miami-Dade County Department of Regulatory and Economic Resources, a copy of which is attached hereto and made a part hereof. The issuance of this approval does not relieve the applicant from obtaining all applicable Federal, State, and local permits.

The foregoing resolution was offered by Commissioner **Xavier L. Suarez**, who moved its adoption. The motion was seconded by Commissioner **Rebeca Sosa** and upon being put to a vote, the vote was as follows:

Jean Monestime, Chairman			**aye**
Esteban L. Bovo, Jr., Vice Chairman			**absent**
Bruno A. Barreiro	**aye**	Daniella Levine Cava	**aye**
Jose "Pepe" Diaz	**aye**	Audrey M. Edmonson	**aye**
Sally A. Heyman	**aye**	Barbara J. Jordan	**absent**
Dennis C. Moss	**absent**	Rebeca Sosa	**aye**
Sen. Javier D. Souto	**aye**	Xavier L. Suarez	**aye**
Juan C. Zapata	**aye**		

The Chairperson thereupon declared the resolution duly passed and adopted this 3rd day of March, 2015. This resolution shall become effective upon the earlier of (1) 10 days after the date of its adoption unless vetoed by the County Mayor, and if vetoed, shall become effective only upon an override by this Board, or (2) approval by the County Mayor of this Resolution and the filing of this approval with the Clerk of the Board.

MIAMI-DADE COUNTY, FLORIDA
BY ITS BOARD OF
COUNTY COMMISSIONERS

HARVEY RUVIN, CLERK

By: ***Christopher Agrippa***
Deputy Clerk

Approved by County Attorney as
to form and legal sufficiency.

Abbie Schwaderer-Raurell

Attachment A

Class I Permit Application

MIAMI-DADE COUNTY

Class I Permit Application

FOR DEPARTMENTAL USE ONLY

Date Received: RECEIVED FEB 13 2015 DERM Coastal Resources Section Natural Resources Regulation & Restoration Division (NRRRD)	**Application Number: CLI-2011-0262** **Application Fee: $28,750.00**

Application must be filled out in entirety. Please indicate N/A for non-applicable fields.

1. Applicant Information:

Name: University of Miami

Address: 1535 Levante Avenue

Coral Gables, Florida Zip Code: 33146

Phone #: (305) 284-5660 Fax#:

Email: lmarbert@miami.edu

* This should be the applicant's information for contact purposes.

2. Applicant's Authorized Permit Agent:
Agent is allowed to process the application, furnish supplemental information relating to the application and bind the applicant to all requirements of the application.

Name: Larry Marbert, Vice President, University of Miami

Address: 1535 Levante Avenue, Coral Gables, Florida

Coral Gables, Florida Zip Code: 33146

Phone #: (305) 284-5660 Fax #:

Email: lmarbert@miami.edu

3. Location where proposed activity exists or will occur (latitude and longitude are only necessary for properties without address or folio #):

Folio #(s): 03-4130-015-0010 and 03-4130-015-0020 Latitude: 25.712778N Longitude: 80.28W

Street Address: 5665 Ponce de Leon Boulevard Section: 30 Township: 54S Range: 41E

In City or Town: Coral Gables Near City or Town:

Name of waterway at location of the activity: Coral Gables Waterway

4. Describe the proposed activity (check all that apply):

- ☐ Seawall
  - ☐ New/Replacement Seawall
  - ☐ Seawall Cap
  - ☐ Batter Piles
  - ☐ King Piles
  - ☐ Footer/Toe Wall
  - ☐ Riprap
- ☐ Dock(s)
- ☐ Pier(s)
- ☐ Viewing Platform
- ☐ Boatlift
- ☐ Mooring Piles
- ☐ Fender Piles
- ☐ Davits
- X Dredging
  - ☐ Maintenance
  - X New
- X Filling
- ☐ Mangrove Trimming
- ☐ Mangrove Removal

X Other: Installation of 3 bridges and extend culverts.

Estimated project cost = $ 1,000,000.00 +

Are you seeking an after-the-fact approval (ATF)? ☐Yes X No If "Yes", describe the ATF work:

5. Proposed Use (check all that apply):

- ☐ Single Family
- ☐ Multi-Family
- ☐ Private
- X Public
- ☐ Commercial
- ☐ Industrial
- ☐ Utility

6. If the proposed work relates to the mooring of vessels provide the following information (please also indicate if the applicant does not have a vessel):

Proposed Vessel Type (s): Not applicable

Vessel Make/Model (If known):

Draft (s)(range in inches.): Length (s)(range in feet.):

Total Number of Slips:

7. List all permits or certifications that have been applied for or obtained for the above referenced work:

Issuing Agency	Type of Approval	Identification Number	Application Date	Approval Date

8. Contractor Information (If known):

Name: _____ License # (County/State): _____

Address: _____ Zip Code: _____

Phone #: _____ Fax #: _____ E-mail: _____

9. IMPORTANT NOTICE TO APPLICANTS; The written consent of the property owner is required for all applications to be considered complete. Your application WILL NOT BE PROCESSED unless the Applicant **and** Owner Consent portion of the application is completed below. You have the obligation to apprise the Department of any changes to information provided in this application.

Application is hereby made for a Miami-Dade County Class I permit to authorize the activities described herein. I agree to or affirm the following:

- I possess the authority to authorize the proposed activities at the subject property, and
- I am familiar with the information, data and plans contained in this application, and
- To the best of my knowledge and belief, the information, data and plans submitted are true, complete and accurate, and
- I will provide any additional information, evidence or data necessary to provide reasonable assurance that the proposed project will comply with the applicable State and County water quality standards both during construction and after the project is completed, and
- I am authorizing the permit agent listed in Section 2 of this application to process the application, furnish supplemental information relating to this application and bind the applicant to all requirements of this application, and
- I agree to provide access and allow entry to the project site to inspectors and authorized representatives of Miami-Dade County for the purpose of making the preliminary analyses of the site and to monitor permitted activities and adherence to all permit conditions.

A. IF APPLICANT IS AN INDIVIDUAL

Signature of Applicant _____ Print Applicant's Name _____ Date _____

B. IF APPLICANT IS OTHER THAN AN INDIVIDUAL OR NATURAL PERSON
(Examples: Corporation, Partnership, Trust, LLC, LLP, etc.)

University of Miami — Print Name of Applicant (Enter the complete name as registered)
Corporation — Type (Corp, LLC, LLP, etc.)
Florida — State of Registration/Incorporation

Under the penalty of perjury, I certify that I have the authority to sign this application on behalf of the Applicant, to bind the Applicant, and if so required to authorize the issuance of a bond on behalf of the Applicant. (If asked, you must provide proof of such authority to the Department). ***Please Note: If additional signatures are required, pursuant to your governing documents, operating agreements, or other applicable agreements or laws, you must attach additional signature pages. ***

Signature of Authorized Representative _____ Print Authorized Representative's Name: Larry Marbert Title: Vice President Date: 2/13/15

C. IF APPLICANT IS A JOINT VENTURE Each party must sign below(If more than two members, list on attached page)

Print Name of Applicant (Enter the complete name as registered) _____ Type (Corp, LLC, LLP, etc.) _____ State of Registration/Incorporation _____

Print Name of Applicant (Enter the complete name as registered) _____ Type (Corp, LLC, LLP, etc.) _____ State of Registration/Incorporation _____

Under the penalty of perjury, I certify that I have the authority to sign this application on behalf of the Applicant, to bind the Applicant, and if so required to authorize the issuance of a bond on behalf of the Applicant. (If asked, you must provide proof of such authority to the Department). ***Please Note: If additional signatures are required, pursuant to your governing documents, operating agreements, or other applicable agreements or laws, you must attach additional signature pages. ***

Signature of Authorized Representative _____ Print Authorized Representative's Name _____ Title _____ Date _____

Signature of Authorized Representative _____ Print Authorized Representative's Name _____ Title _____ Date _____

RECEIVED
FEB 13 2015
DERM Coastal Resources Section
Land Resources Regulation & Restoration

10. WRITTEN CONSENT OF THE PROPERTY OWNER OF THE AREA OF THE PROPOSED WORK

I/We are the fee simple owner(s) of the real property located at 5665 Ponce de Leon Boulevard and 1239 Dickinson Drive, Coral Gables, Miami-Dade County, Florida, otherwise identified in the public records of Miami-Dade County as Folio No. 03-4130-015-0010 and 03-4130-015-0020. I am aware and familiar with the contents of this application for a Miami-Dade County Class I Permit to perform the work on or adjacent to the subject property, as described in Section 4 of this application. I possess the riparian rights to the area of the proposed work (if applicable) and hereby consent to the work identified in this Class I Permit application.

A. IF THE OWNER(S) IS AN INDIVIDUAL

Signature of Owner	Print Owner's Name	Date
Signature of Owner	Print Owner's Name	Date

B. IF THE OWNER IS OTHER THAN AN INDIVIDUAL OR NATURAL PERSON
(Examples: Corporation, Partnership, Joint Venture, Trust, LLC, LLP, etc.)

University of Miami	Corporation	Florida
Print Name of Owner (Enter the complete name as registered)	Type (Corp, LLC, LLP, etc.)	State of Registration/Incorporation

1535 Levante Avenue, Coral Gables, Florida 33146
Address of Owner

Under the penalty of perjury, I certify that I have the authority to sign this application on behalf of the Owner, to bind the Owner, and if so required to authorize the issuance of a bond on behalf of the Owner. (If asked, you must provide proof of such authority to the Department). ***Please Note: If additional signatures are required, pursuant to your governing documents, operating agreements, or other applicable agreements or laws, you must attach additional signature pages. ***

Signature of Authorized Representative	Print Authorized Representative's Name	Title	Date
	Larry Marbert	Vice President	2/13/15
Signature of Authorized Representative	Print Authorized Representative's Name	Title	Date

Please Review Above

Appropriate signature(s) must be included in:

Box 9: either A, B or C

AND

Box 10: either A or B

RECEIVED

FEB 13 2015

DERM Coastal Resources Section
Natural Resources Regulation & Restoration
Division (NRRD)

Attachment B

Owner/Agent Letter, Engineer Certification Letter, and Project Sketches

PERMIT APPLICANT / AUTHORIZED AGENT STATEMENT

FEB 13 2015

Miami Dade County Department of Regulatory and Economic Resources
Class I Permitting Program
701 NW 1st Court
Miami, FL 33136

Re: Class I Standard Form Permit Application Number CLI-2011-0262

By the attached Class I Standard Form permit application with supporting documents, I, Larry Marbert, Vice-President, University of Miami, am the permit applicant, and hereby request permission to perform the work associated with Class I Permit Application CLI-2011-262. I understand that a Miami-Dade County Class I Standard Form Permit is required to perform this work.

If approval is granted for the proposed work by the Board of County Commissioners, complete and detailed plans and calculations of the proposed work shall be prepared by an engineer licensed in the State of Florida in accordance with the minimum requirements of Chapter 24 of the Code of Miami-Dade County, Florida. Said plans and calculations shall be subject to the review and approval of the Department. The permit applicant will secure the services of an engineer licensed in the State of Florida to conduct inspections throughout the construction period, and said engineer shall prepare all required drawings of record. In the event that the proposed work which is the subject of this Class I Permit application involves the cutting or trimming of a mangrove tree(s), a detailed plan of the proposed cutting or trimming shall be prepared by a licensed landscape architect and submitted to the Department for review and approval, and the permit applicant will secure the services of a licensed landscape architect to supervise the trimming or cutting.

Respectfully submitted,

Larry Marbert,
Vice President, University of Miami
Permit Applicant

RECEIVED

FEB 13 2015

DERM Coastal Resources
Natural Resources Regulation
Division (NRRD)

ENGINEER LETTER OF CERTIFICATION

February 13, 2015

Miami-Dade County Department of Regulatory and Economic Resources
Class I Permitting Program
701 NW 1st Court
Miami, Florida 33136

RE: Class I Permit Application Number CLI-2011-0262

Ladies and Gentlemen:

This letter will certify that I am an engineer licensed in the State of Florida, qualified by education and experience in the area of engineering design and inspection, and that to the best of my knowledge an d belief, the proposed work does not violate any laws, rules, or regulations of the State of Florida or any provisions of the Code of Miami-Dade County which may be applicable, that diligence and recognized standard practices of the engineering profession have been exercised in the engineer's design of the proposed work and in my opinion based upon my knowledge and belief, the following will not occur:

a. Harmful obstruction or undesirable alternation of the natural flow of the water within the area of the proposed work.

b. Harmful of increased erosion, shoaling of channels or stagnant areas of water. (Not applicable to class IV permits)

c. Material injury to adjacent property.

d. Adverse environmental impacts from changes in water quality or quantity. (Applicable to class IV permits only)

Further, I have been retained by the applicant to provide inspections throughout the construction period and to prepare a set of reproducible record prints of drawings showing changes made during the construction process based upon the marked-up prints, certified surveys, drawings, and other data furnished by the contractor to me.

Sincerely,

S. Mark Kline
KEITH AND SCHNARS PA
6500 North Andrews Avenue
Fort Lauderdale, Florida 33309
P.E. # 44016

RECEIVED
FEB 13 2015
DERM Coastal Resources Section
Natural Resources Regulation & Restoration
Division (NRRRD)

UNIVERSITY OF Miami

KEITH and SCHNARS, P.A.
ENGINEERS, PLANNERS, SURVEYORS
CERTIFICATE OF AUTHORIZATION #1337
5500 NORTH ANDREWS AVENUE, FORT LAUDERDALE, FLORIDA 33309 (954) 776-1616

UHEALTH MEDICAL CENTER
UNIVERSITY CANAL IMPROVEMENTS
CORAL GABLES

UNIVERSITY OF MIAMI
1300 DICKINSON DRIVE

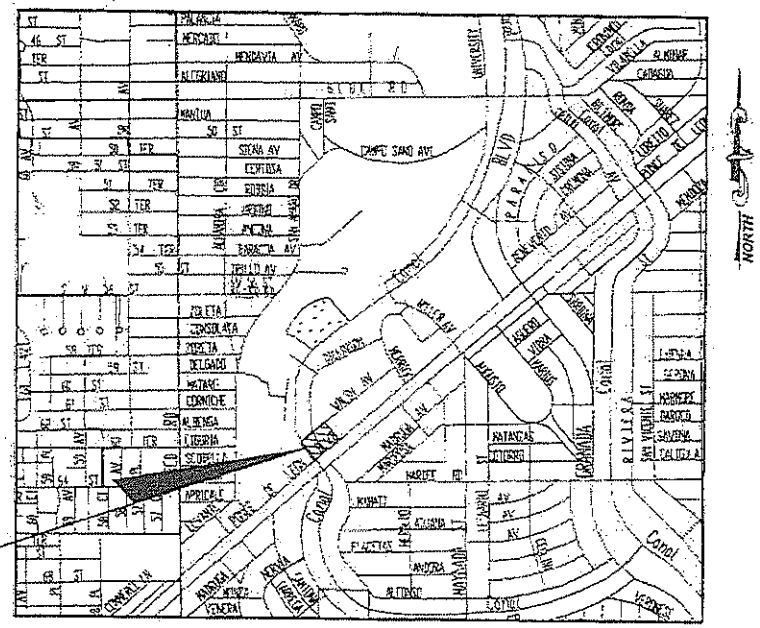

PROJECT LOCATION MAP
N.T.S.

ROADWAY PLANS
ENGINEER OF RECORD: S. MARK KUHE, P.E.

P.E. NO.: 44016

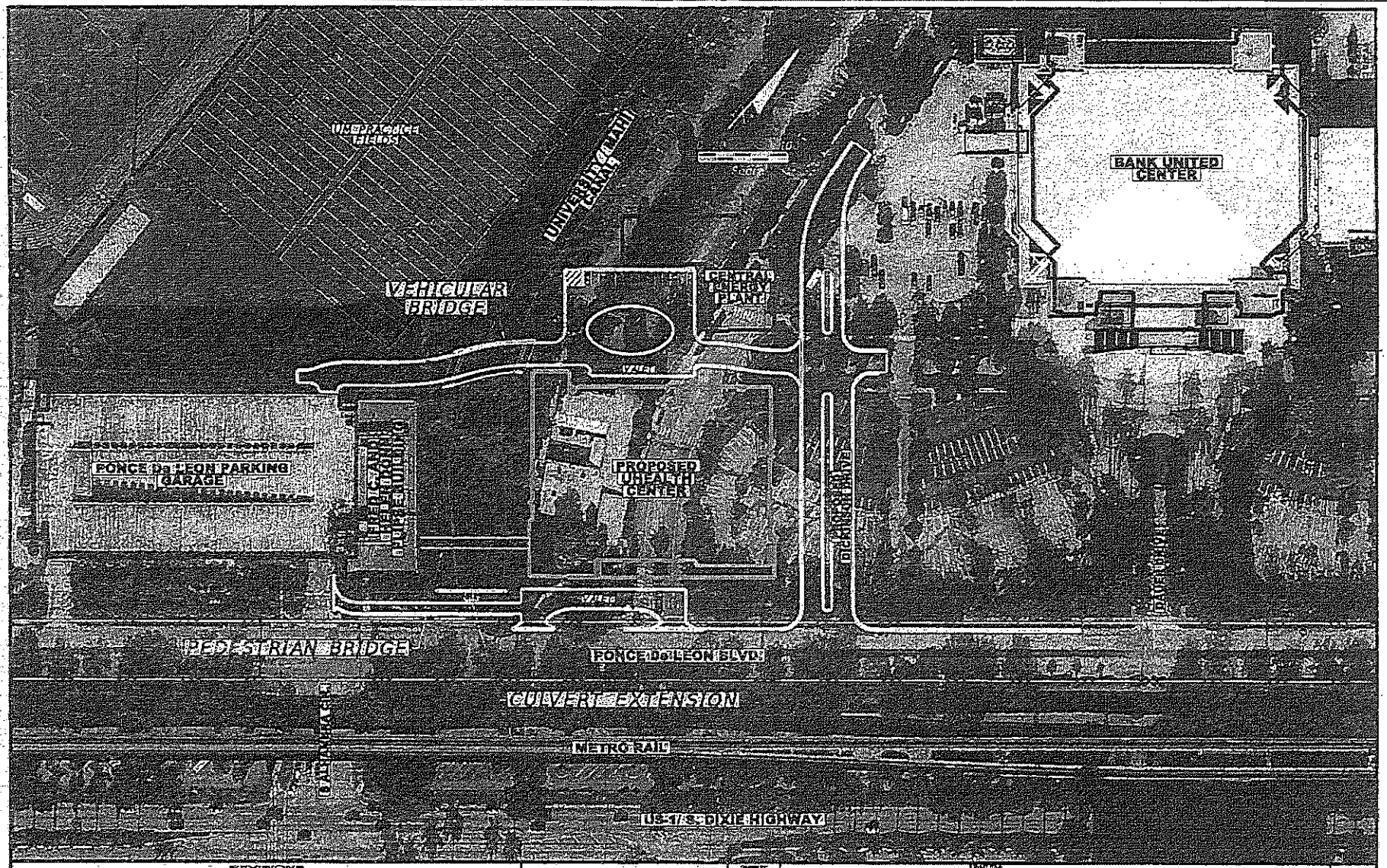

REVISIONS					
DATE	BY	DESCRIPTION	DATE	BY	DESCRIPTION

Keith and Schnars, P.A.
Engineers · Planners · Surveyors
Certificate of Authorization No. 1337

DRAWN BY:
CHECKED BY:
DESIGNED BY:
CHECKED BY:

SHEET TITLE: UHEALTH SITE PLAN

REF. DWG. NO.

SHEET NO

DSGNRD01_SitePlan_COL.DGN 10/17/2014 3:14:57 PM

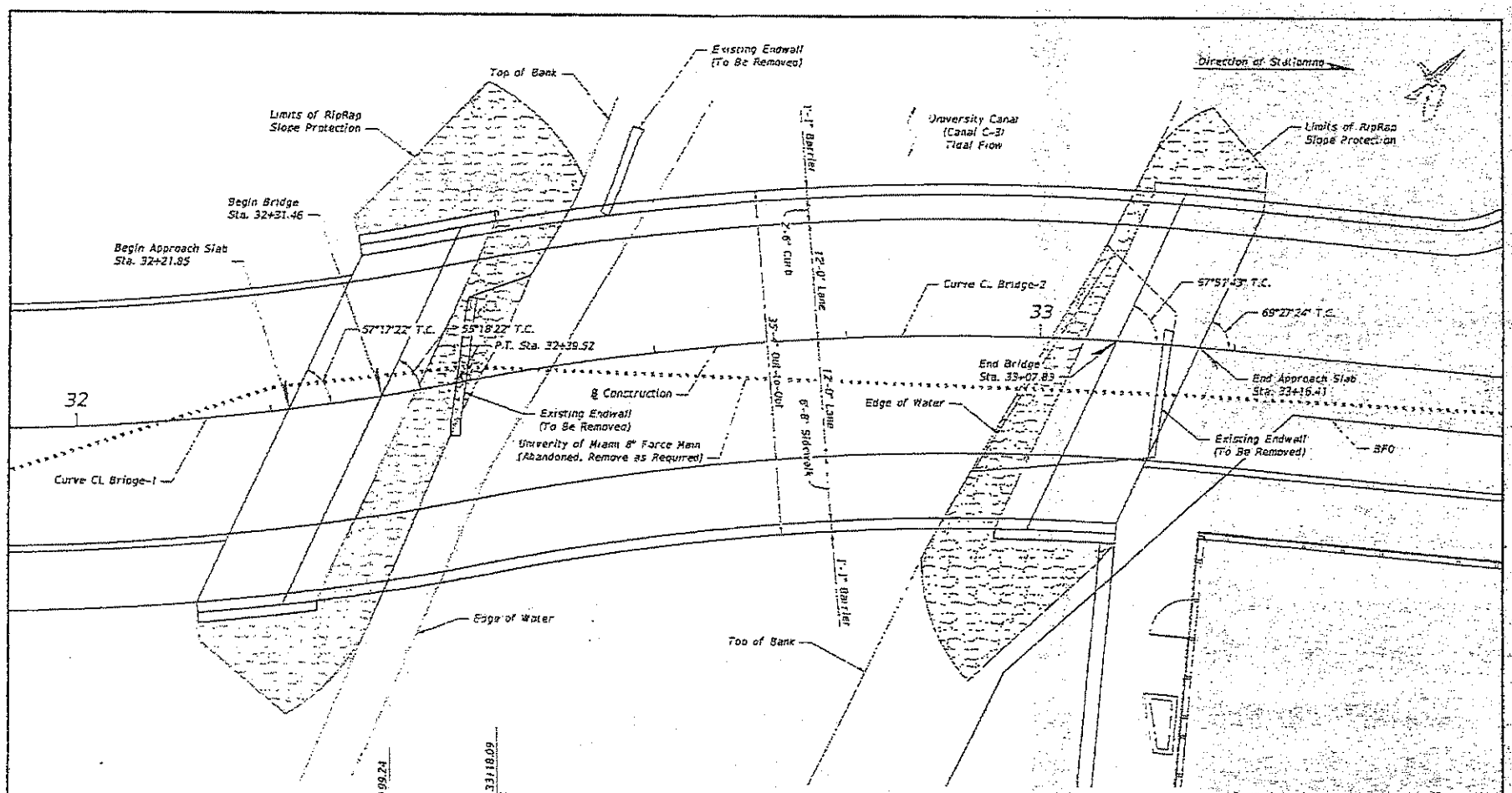

PLAN VIEW

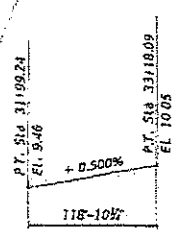

VERTICAL CURVE DATA

HORIZONTAL CURVE DATA CL_BRIDGE-1

P.I. Sta.	= 32+00.51
Δ	= 16° 22' 05" (LT)
D	= 20° 50' 05"
T	= 39.55
L	= 78.56
R	= 275.00
PC STA.	= 31+60.96
PT STA.	= 32+39.52

HORIZONTAL CURVE DATA CL_BRIDGE-2

P.I. Sta.	= 32+79.08
Δ	= 16° 22' 05" (RT)
D	= 20° 50' 05"
T	= 39.56
L	= 78.57
R	= 275.00
PC STA.	= 32+39.52
PT STA.	= 33+18.09

REVISIONS

Keith and Schnars, P.A.
Engineers · Planners · Surveyors
Certificate of Authorization No. 1337

PERMIT DRAWINGS

UHEALTH VEHICULAR BRIDGE

VEHICULAR BRIDGE PLAN VIEW

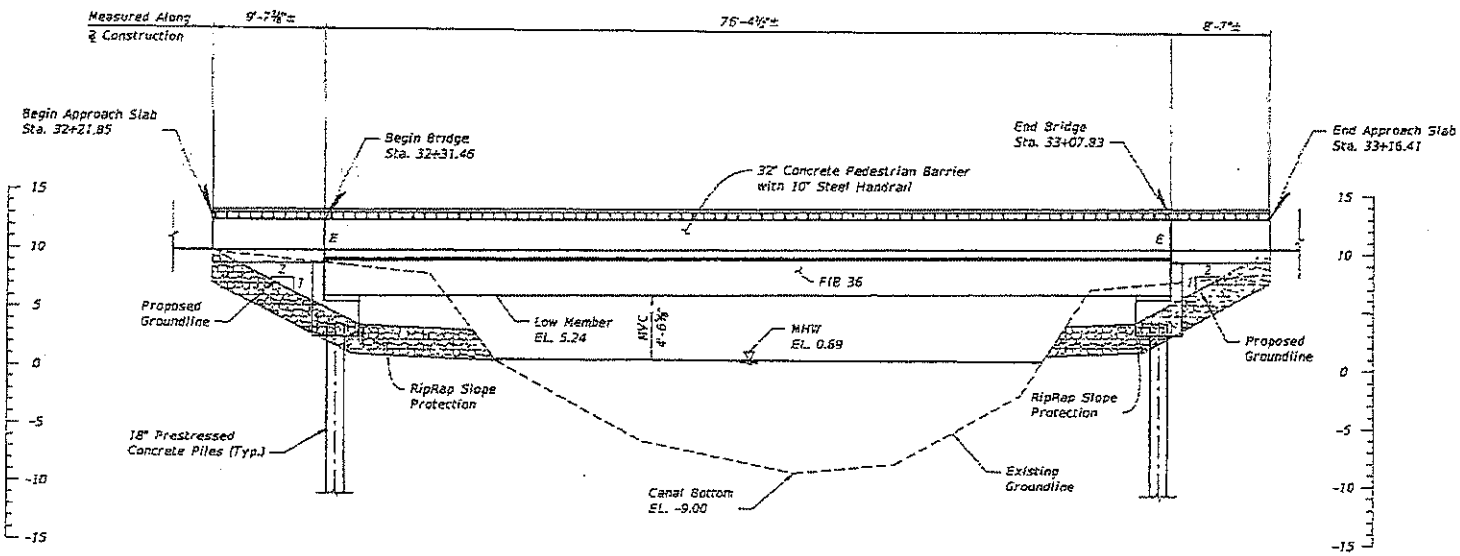

ELEVATION VIEW

REVISIONS							
DATE	BY	DESCRIPTION	DATE	BY	DESCRIPTION		

Keith and Schnars, P.A.
Engineers - Planners - Surveyors
Certificate of Authorization No. 1337

DRAWN BY:
CHECKED BY:
REVIEWED BY:
DESIGNED BY:

PERMIT DRAWINGS

SHEET TITLE: UHEALTH VEHICULAR BRIDGE

PROJECT NAME: VEHICULAR BRIDGE ELEVATION VIEW

REF. DWG. NO.

SHEET NO.

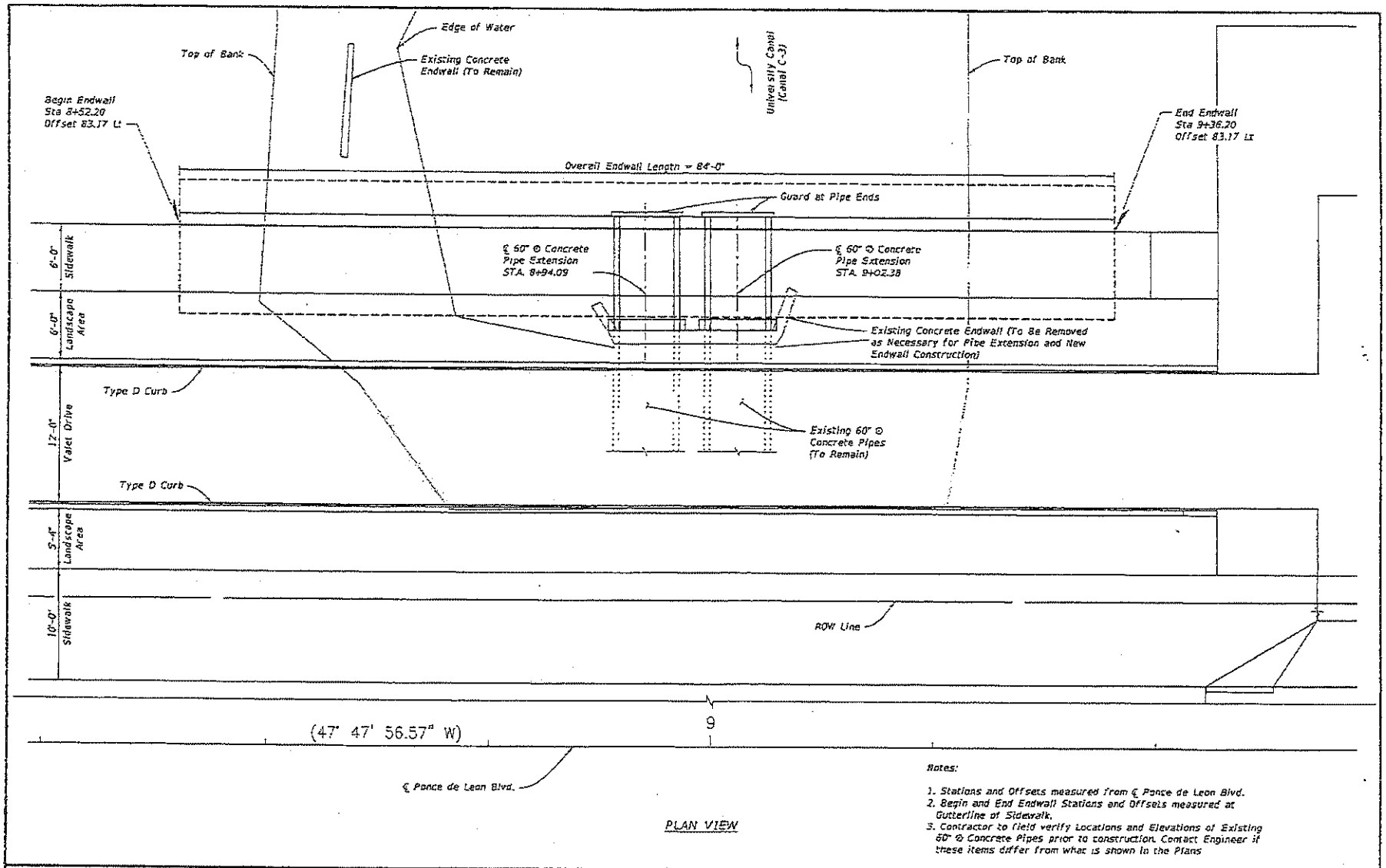

PLAN VIEW

Notes:

1. Stations and Offsets measured from ℄ Ponce de Leon Blvd.
2. Begin and End Endwall Stations and Offsets measured at Gutterline of Sidewalk.
3. Contractor to field verify Locations and Elevations of Existing 60" ⊙ Concrete Pipes prior to construction. Contact Engineer if these items differ from what is shown in the Plans

REVISIONS

DATE	BY	DESCRIPTION	DATE	BY	DESCRIPTION

Keith and Schnars, P.A.
Engineers • Planners • Surveyors
Certificate of Authorization No. 1237

DRAWN BY:
CHECKED BY:
DESIGNED BY:
CHECKED BY:

PERMIT DRAWINGS

SHEET TITLE: UHEALTH CULVERT EXTENSION

PROJECT TITLE: CULVERT EXTENSION PLAN VIEW

FDOT DWG NO.

SHEET NO.

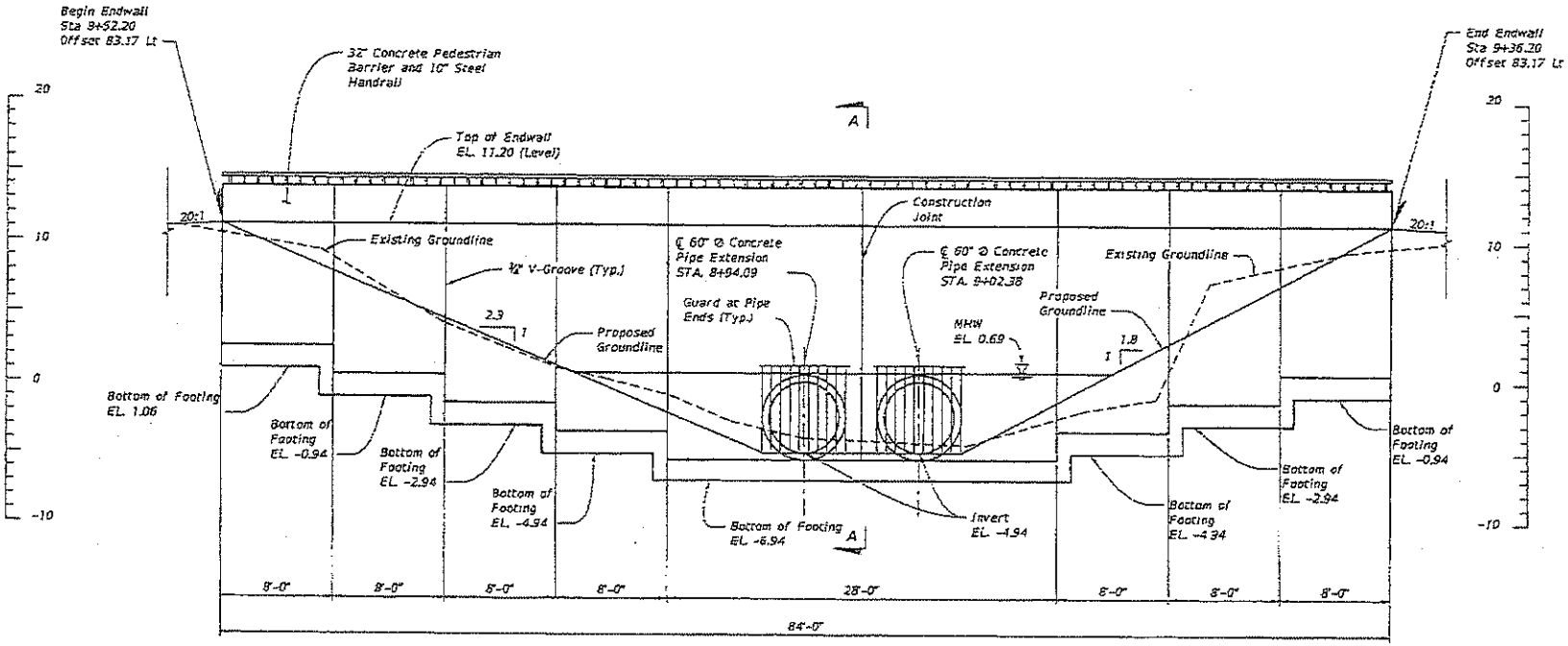

Elevation View

Notes:

1. Stations and Offsets measured from ℄ Ponce de Leon Blvd.
2. Begin and End Endwall Stations and Offsets measured at Gutterline of Sidewalk.
3. Contractor to field verify Locations and Elevations of Existing 60" ⌀ Concrete Pipes prior to construction. Contact Engineer if these items differ from what is shown in the Plans.
4. For Section A-A, see Culvert Extension Typical Section Sheet.

REVISIONS					
DATE	BY	DESCRIPTION	DATE	BY	DESCRIPTION

Keith and Schnars, P.A.
Engineers · Planners · Surveyors
Certificate of Authorization No. 1337

PERMIT DRAWINGS

SHEET TITLE: UHEALTH CULVERT EXTENSION

PROJECT TITLE: CULVERT E. TENSION ELEVATION VIEW

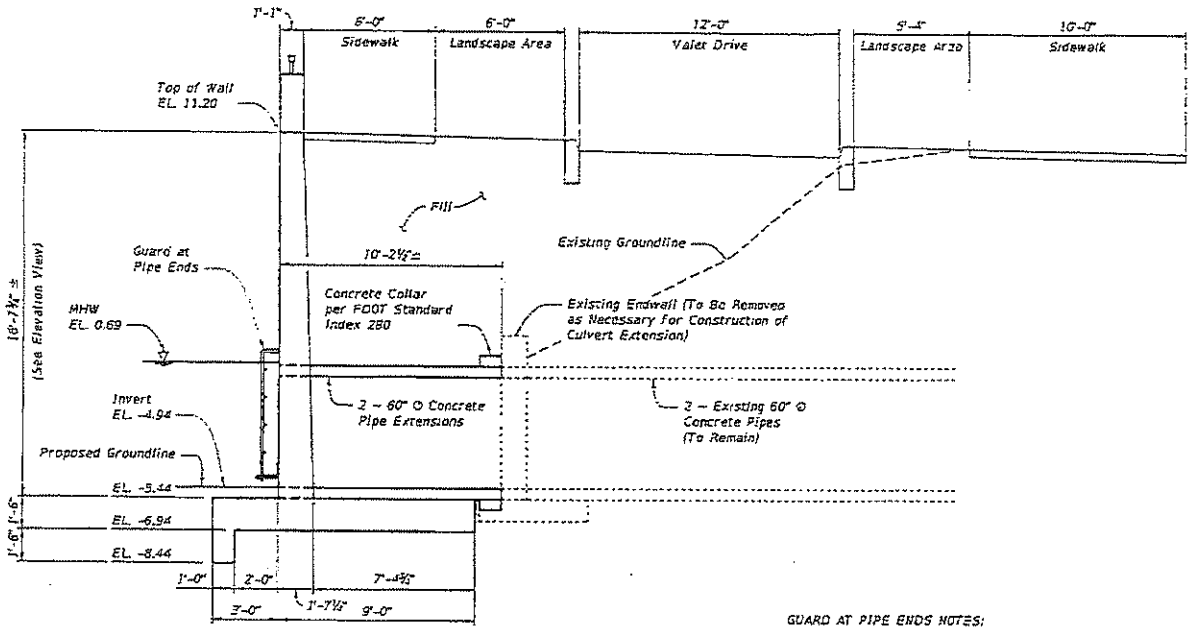

Section A-A

(Typical Section at Pipe Culverts)

STEEL-PLATE SECTION

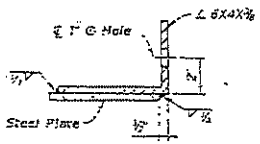

CLIP DETAIL

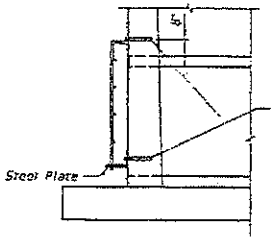

SIDE VIEW

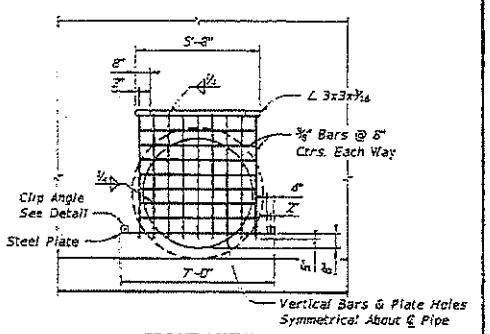

FRONT VIEW

GUARD AT PIPE ENDS

GUARD AT PIPE ENDS NOTES:

1. Guards to be constructed only at locations specifically called for in plans. Guard, plate & clips, bolts, nuts and sleeves to be included in the contract unit price for culvert.
2. Grates shall be ASTM A242, A572 or A588, Grade 50 steel, and galvanized in accordance with Section 975 and 425-3.2 of the FDOT Standard Specifications.
3. Bar spacings shown are center to center.
4. Holes that are drilled for Adhesive-Bonded Dowels shall be thoroughly cleaned prior to installation.
5. Contractor shall submit design calculations and shop drawings, signed and sealed by a Professional Engineer in the state of Florida, for Culvert Grates to the Engineer of Record for review and approval before fabrication.

REVISIONS					
NO.	BY	DESCRIPTION	DATE	BY	DESCRIPTION

Keith and Schnars, P.A.
Engineers · Planners · Surveyors
Certificate of Authorization No. 1257

PERMIT DRAWINGS

UHEALTH CULVERT EXTENSION

CULVERT EXTENSION TYPICAL SECTION

Attachment C

Zoning Memorandum

Memorandum

MIAMI-DADE COUNTY

Date: February 12, 2015

To: Lisa Spadafina, Chief
Natural Resources Division
Department of Regulatory and Economic Resources

From: Alain Alonso, Biologist II A.A.
Coastal and Wetlands Resources Section
Department of Regulatory and Economic Resources

Subject: Class I Permit Application by the University Of Miami to Construct a Pedestrian Bridge, a Vehicular Bridge, and to Dredge and Fill Tidal Waters to Construct a Driveway, all of which will Span an Artificial Canal in the City of Coral Gables, Florida

---

Pursuant to Section 24-48.2(II)(B)(7), of the Code of Miami-Dade County, Florida, a substantiating letter shall be submitted by the applicant stating that the proposed project does not violate any zoning laws. Said letter will be submitted after approval by the Miami-Dade County Board of County Commissioners and prior to issuance of the Class I permit.

Attachment D

Names and Addresses of Owners of all Riparian Property within Three Hundred (300) Feet of the Proposed Work

TO: Maribel Lena
Public Information Officer
Florida Department of Transportation
District 6
1000 NW 111th Avenue
Miami, Florida 33172

TO: Glen Kephart
City of Coral Gables
Public Works Department
2800 SW 72nd Avenue
Miami, Florida 33155

TO: Gregory Robinson
Miami-Dade Transit
Overtown Transit Village
701 NW 1st Court, #1700
Miami, Florida 33136

TO: Jerry Blackman
Miami-Dade Transit
Overtown Transit Village
701 NW 1st Court, #1700
Miami, Florida 33136

TO: Eric Muntan
Miami-Dade Transit
Overtown Transit Village
701 NW 1st Court, #1700
Miami, Florida 33136

TO: Eric Walker
Miami-Dade Transit
Overtown Transit Village
701 NW 1st Court, #1700
Miami, Florida 33136

TrueBlock™ Technology Patent Pending
Use Avery® TEMPLATE 5164™

www.avery.com
1-800-GO-AVERY

AVERY® 8164™

TO: Lee Vega
Miami-Dade Transit
Overtown Transit Village
701 NW 1st Court, #1700
Miami, Florida 33136

TO: Mrs. Taj Duncan-Thompson
Miami-Dade Transit
Overtown Transit Village
701 NW 1st Court, #1700
Miami, Florida 33136

TrueBlock™ Brevet de Technologie en attente
Utilisez le gabarit 5164™

www.avery.com
1-800-GO-AVERY

AVERY® 8164™

Attachment E

Environmental Quality Control Board Order No. 14-51

CFN: 20140630813 BOOK 29304 PAGE 2558
DATE:09/11/2014 08:15:11 AM
HARVEY RUVIN, CLERK OF COURT, MIA-DADE CTY

BEFORE THE MIAMI-DADE COUNTY
ENVIRONMENTAL QUALITY CONTROL BOARD

IN RE:	:	**Board Order No. 14-51**
	:	
University of Miami	:	
	:	

THIS MATTER came before the Board on July 10, 2014 as a request by Petitioner, University of Miami, for a variance from the requirements of Section 24-48.3(2) of the Code of Miami-Dade County, Florida. The request is to allow the construction of a road within a tidally connected artificial canal within the City of Coral Gables. The road will facilitate pedestrian and vehicular access to the patient drop off area and valet parking station for a new medical building associated with the UHealth Gables Medical Center project. The installation of the road and the associated extension of the culvert system within the driveway footprint will involve the dredging and filling of 0.02 acres of tidal waters. The scope of work also includes 2 bridges proposed to be installed further upstream; however, the bridges will be pile-supported, and do not involve dredging or filling of tidal waters. The subject property is located at 5665 Ponce de Leon, Coral Gables, Florida and is more particularly described in Exhibit "A" attached hereto and incorporated herein by reference.

Section 24-48.3 of the Code requires that the Miami-Dade County Department of Regulatory and Economic Resources, Division of Environmental Resources Management (DERM), evaluate environmental and related impacts, including but not limited to, aesthetics, navigation, marine resources and any other environmental value affecting the public interest when deciding whether to approve or deny a proposed project. Furthermore, Section 24-48.3 of the Code requires that filling work proposed in a Class I permit application comply with at least one of the following six criteria:

1. Minimum dredging and spoiling for public navigation or public necessity.

2. An alteration of physical conditions as may be necessary to enhance the quality or utility of adjacent waters.

3. Minimum dredging and filling for the creation and maintenance of marinas, piers, docks and attendant navigational channels.

4. Minimum dredging and filling as is necessary for the elimination of conditions hazardous to the public health or for the elimination of stagnant waters.

5. Minimum dredging and filling as is necessary to enhance the biological, chemical or physical characteristics of adjacent waters.

6. A physical modification necessary to protect public or private property.

The project site is located along the north side of the Ponce de Leon Boulevard and will span an artificial canal that is connected to the Coral Gables Waterway through a culvert system that extends under US Highway 1 and the existing adjacent roads. The proposed road will be constructed through the installation of a retaining wall located approximately 11 feet waterward of the Mean High Water Line and by backfilling of approximately 750 square feet of tidal waters (121 cubic yards) to be consistent with the elevation of the top of the canal banks. As proposed, the work does not comply with the above-referenced Section of the Code. DERM staff requested that the Petitioner evaluate the option of installing a pile-supported bridge in order to avoid filling of tidal waters; however, the Petitioner has stated that the current proposal is the most practical and cost effective solution to support the necessary construction and is requesting a variance to the Code. Staff notes that the area of the proposed work does not currently support significant benthic resources and no halophytic wetland vegetation was documented on-site.

The Board finds that based upon the evidence and testimony presented and the foregoing facts, granting the requested variance to allow the Petitioner to seek approval from the Board of County Commissioners for the construction of a road within a tidally connected artificial canal within the City of Coral Gables, will not be detrimental to the public health, welfare and safety, will not create a nuisance, and will not materially increase the level of pollution in this County.

ACCORDINGLY, IT IS

ORDERED AND ADJUDGED that, based upon the evidence and testimony presented, the request for a variance from the requirements of Section 24-48.3(2) of the Code, be and the same is hereby granted subject to the following conditions:

1. The proposed work shall be conducted in accordance with plans signed and sealed by an engineer licensed in the State of Florida and approved by DERM.

2. In order to minimize danger of entrapment to manatees, culverts which are greater than 7 and less than 60 inches in diameter, shall be covered with grates or screens with spaces less than 7 inches wide; these shall be maintained to prevent upland flooding.

*The Petitioner is advised that this approval does not guarantee or ensure approvals from the Department of Health or any other federal, state, county or municipal agency and that the extension of time granted herein does not affect or modify any requirement of any other provision of law.

**Failure at any time to comply with any of the Conditions of this Board Order shall render this Order null and the variance granted herein no longer in effect. Upon compliance with the conditions, the variance shall be reinstated.

Done and Ordered this 10th day of Sept., 2014 in Miami-Dade County, Florida.

Claire Bradshaw Sidran

Claire Bradshaw-Sidran, Ph.D.

Chairperson

FILING AND ACKNOWLEDGEMENT

Filed on this 10th day of Sept., 2014 with the Secretary of the Board as Clerk of the Environmental Quality Control Board, receipt of which is hereby acknowledged and the seal of the Board affixed below.

Secretary and Clerk

SEAL

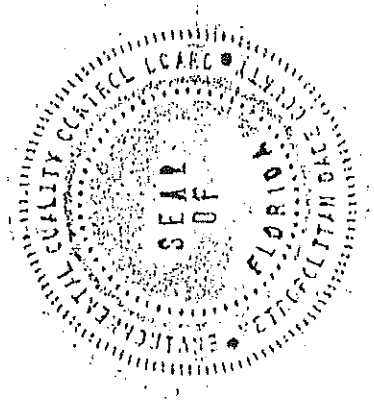

Approved as to form and legal sufficiency:

R. A. CUEVAS, JR.
Miami-Dade County Attorney
Attorney for the Board

By: Thomas Robertson
Assistant County Attorney

2013-EQCB-00014
July 10, 2014 (10)

Exhibit A

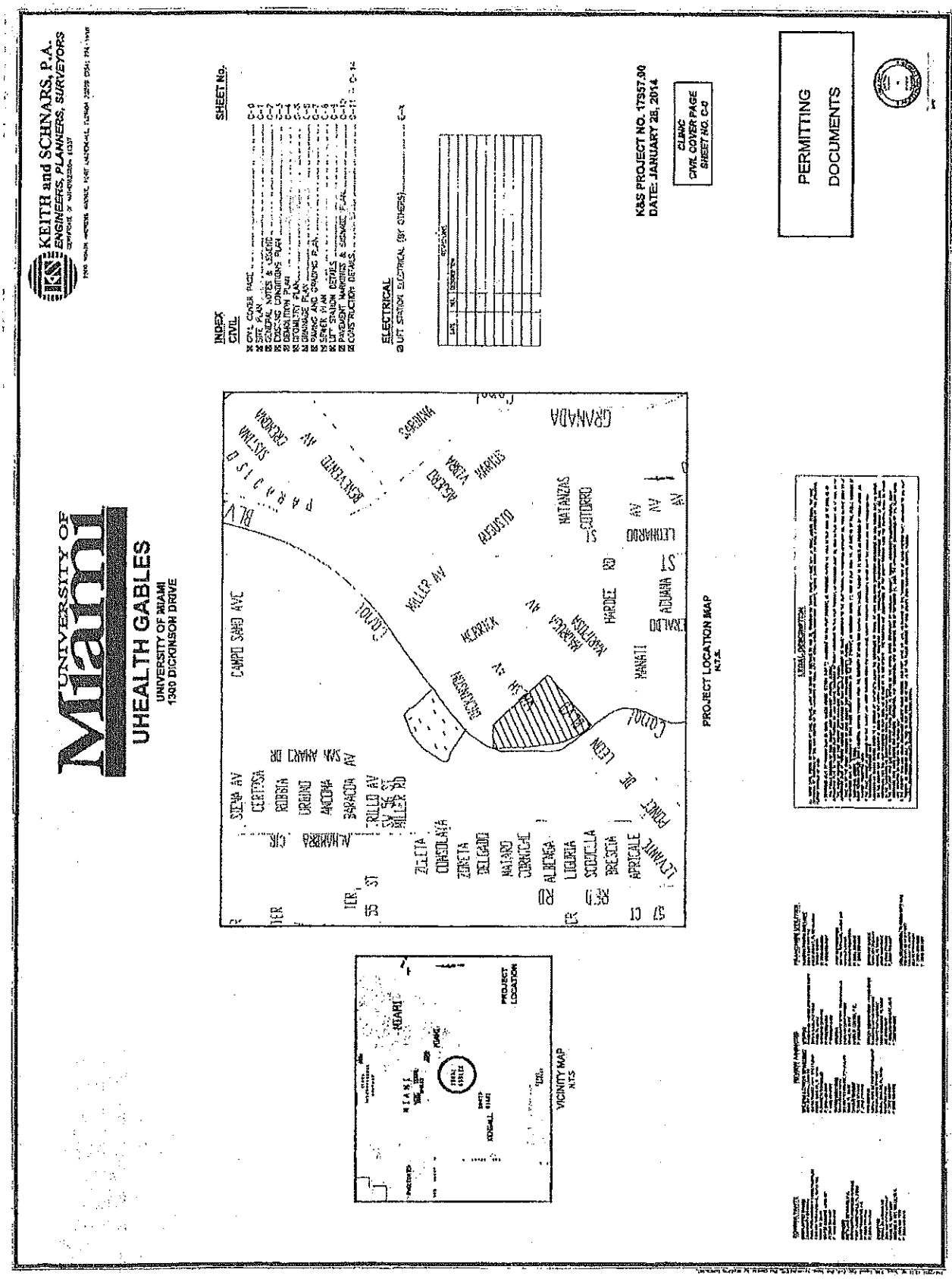
KEITH and SCHNARS, P.A.
ENGINEERS, PLANNERS, SURVEYORS
UNIVERSITY OF Miami
UHEALTH GABLES
UNIVERSITY OF MIAMI
1300 DICKINSON DRIVE
INDEX
CIVIL
SHEET No.
ELECTRICAL
K&S PROJECT NO. 17957.00
DATE: JANUARY 28, 2014
CLINIC
CIVIL COVER PAGE
SHEET NO. C-0
PERMITTING
DOCUMENTS
PROJECT LOCATION MAP
N.T.S.
VICINITY MAP
N.T.S.
PROJECT
LOCATION

Attachment F

RER-DERM Project Report

PROJECT REPORT
CLASS I PERMIT APPLICATION NO. CLI-2011-0262

Class I Permit Application by the University of Miami to Construct a Pedestrian Bridge, a Vehicular Bridge, and to Dredge and Fill Tidal Waters to Construct a Driveway, all of which will Span an Artificial Canal in the City of Coral Gables, Florida

Date: February 12, 2015

Staff's recommendation of approval for the above-referenced permit application is based on the applicable evaluation factors under Section 24-48.3 of the Code of Miami-Dade County, Florida. The following is a summary of the proposed project with respect to each applicable evaluation factor:

1. **Potential Adverse Environmental Impact** – The potential adverse environmental impacts associated with the proposed work is minimal. The shoreline does not support wetland vegetation and no submerged aquatic vegetation was documented in the footprint of the proposed project. In addition, the Class I permit will include conditions requiring erosion and turbidity control devices during all phases of construction to ensure compliance with State and County water quality standards. Therefore, the proposed project is not reasonably expected to result in adverse environmental impacts.

   The proposed project is not located within an area designated as essential manatee habitat by the Miami-Dade County Manatee Protection Plan; furthermore, the project site is tidally connected through a series of culverts with incorporated grate systems that restrict manatee access to the canal. Therefore, the proposed project is not reasonably expected to adversely impact the West Indian Manatee.

2. **Potential Cumulative Adverse Environmental Impact** – The proposed project is not reasonably expected to result in cumulative adverse environmental impacts.

3. **Hydrology** - The existing culverts located within the proposed fill area will be modified to maintain connectivity along the canal under Ponce de Leon Boulevard; therefore, the proposed project is not reasonably expected to adversely affect surface water drainage or retention of stormwater.

4. **Water Quality** – The proposed project is not reasonably expected to adversely affect surface water quality. The Class I permit will require that erosion and turbidity control devices such as, but not limited to, silt fencing and turbidity curtains, be utilized during all phases of construction to ensure compliance with State and County water quality standards.

5. **Wellfields** – The proposed project is not reasonably expected to adversely affect wellfields.

6. **Water Supply** – The proposed project is not reasonably expected to adversely affect water supply.

7. **Aquifer Recharge** – The proposed project is not reasonably expected to adversely affect aquifer recharge.

8. **Aesthetics** – The proposed project is not reasonably expected to result in negative aesthetic impacts. The proposed bridges and driveway are designed to be aesthetically compatible with the surrounding area. However, during the construction process there may be temporary aesthetic impacts related to the presence of machinery and equipment associated with the construction activities.

9. **Navigation** – The project site is tidally connected through a series of culverts; therefore, the proposed project is not reasonably expected to adversely affect navigation.

10. **Public Health** - The proposed project is not reasonably expected to adversely affect public health.

11. **Historic Values** - The proposed project is not reasonably expected to adversely affect historic values.

12. **Archaeological Values** - The proposed project is not reasonably expected to adversely affect archaeological values.

13. **Air Quality** – The proposed project is not reasonably expected to adversely affect air quality.

14. **Marine and Wildlife Habitats** – The proposed project is not reasonably expected to adversely affect marine and wildlife habitats, as set forth in Number 1 above.

15. **Wetland Soils Suitable for Habitat** – The proposed project does not involve any work in wetland soils.

16. **Floral Values** – The proposed project is not reasonably expected to adversely affect marine flora, as set forth in Number 1 above.

17. **Fauna Values** - The proposed project is not reasonably expected to adversely affect marine fauna as set forth in Number 1 above.

18. **Rare, Threatened and Endangered Species** – *Crocodylus acutus* (American Crocodile) has been previously observed upstream in Lake Osceola within the University's main campus. However, the existing culvert system currently restricts access in and out of the waterway as a result of the manatee grates. Therefore, the proposed project is not reasonably expected to adversely impact the American Crocodile or the West Indian Manatee as set forth in Number 1 above.

19. **Natural Flood Damage Protection** - The proposed project is not reasonably expected to adversely affect surface water drainage or retention of stormwater as set forth in Number 3 above.

20. **Wetland Values** –The proposed project does not involve work in wetlands.

21. **Land Use Classification** – Pursuant to Section 24-48.2(II)(B)(7), of the Code of Miami-Dade County, Florida, a substantiating letter shall be submitted stating that the proposed project does not violate any zoning laws. Said letter will be submitted after the approval by the Board of County Commissioners and prior to the issuance of a Class I permit.

22. **Recreation** - The proposed project does not conflict with the recreation element of the Miami-Dade County Comprehensive Development Master Plan.

23. **Other Environmental Values Affecting the Public Interest** – The proposed project is not reasonably expected to adversely affect other environmental values affecting the public interest. The proposed project will occur on lands owned by the University of Miami.

24. **Conformance with Standard Construction Procedures and Practices and Design and Performance Standards** – The proposed project complies with the standard construction procedures and practices and design and performance standards of the applicable portions of the following:
    a) Chapter 33B of the Code of Miami-Dade County
    b) Miami-Dade County Public Works Manual

25. **Comprehensive Environmental Impact Statement (CEIS)** - In the opinion of the Director, the proposed project is not reasonably expected to result in significant adverse environmental impacts or cumulative adverse environmental impacts. Therefore, a CEIS was not required by RER-DERM to evaluate the project.

26. **Conformance with All Applicable Federal, State and Local Laws and Regulations** - The proposed project is in conformance with applicable State, Federal and local laws and regulations:
    a) Chapter 24 of the Code of Miami-Dade County (variance was required)
    b) United States Clean Water Act (US Army Corps of Engineers permit is required)
    c) South Florida Water Management District (permit is required)

27. **Conformance with the Miami-Dade County Comprehensive Development Master Plan (CDMP)** - In the opinion of the Director, the proposed project is in conformance with the CDMP. The following is a summary of the proposed project as it relates to the CDMP:

LAND USE ELEMENT I:

Objective 3/Policies 3A, 3B, 3C - Protection of natural resources and systems. - The proposed project is consistent with the Conservation and Coastal Management Elements of the CDMP. The proposed project is compatible with surrounding land uses in Biscayne Bay and does not involve development in the Big Cypress area of Critical State Concern or the East Everglades.

TRANSPORTATION ELEMENT II

Aviation Subelement/Objective 5 - Aviation System Expansion - There is no aviation element to the proposed project.

Port of Miami River Subelement/Objective 3 - Minimization of impacts to estuarine water quality and marine resources. The proposed project is not located within the Miami River.

CONSERVATION, AQUIFER RECHARGES AND DRAINAGE ELEMENT IV:

Objective 3/Policies 3A, 3B, 3D - Wellfield protection area protection. - The proposed project is not located within a wellfield protection area.

Objective 3/Policy 3E - Limestone mining within the area bounded by the Florida Turnpike, the Miami-Dade/ Broward Levee, N.W. 12 Street and Okeechobee Road. - The proposed project is not located within this area.

Objective 4/Policies 4A, 4B, 4C - Water storage, aquifer recharge potential and maintenance of natural surface water drainage. - The proposed project is not reasonably expected to adversely affect water storage, aquifer recharge potential or natural surface water drainage.

Objective 5/Policies 5A, 5B, 5F - Flood protection and cut and fill criteria – The proposed project is not reasonably expected to compromise flood protection.

Objective 6/Policy 6A - Areas of highest suitability for mineral extraction. - The proposed project is not located in an area proposed or suitable for mineral extraction.

Objective 6/Policy 6B - Guidelines for rock quarries for the re-establishment of native flora and fauna. - The proposed project is not located in a rock quarry.

Objective 7/Policy 7A - No net loss of high quality, relatively unstressed wetlands. – The proposed project does not involve work in wetlands.

Objective 9/Policies 9A, 9B, 9C - Protection of habitat critical to Federal or State-designated threatened or endangered species. – The proposed project is not reasonably expected to adversely affect habitat critical to Federal or State-designated threatened or endangered species as set forth in Number 18 above.

COASTAL MANAGEMENT ELEMENT VII:

Objective 1/Policy 1A - Tidally connected mangroves in mangrove protection areas. – The proposed project is not located within a designated "Mangrove Protection Area."

Objective 1/ Policy 1B - Natural surface flow into and through coastal wetlands. – The proposed project is not located within coastal wetlands.

Objective 1/ Policy 1C - Elevated boardwalk access through mangroves. – The proposed project does not involve access through mangroves.

Objective 1/Policy 1D - Protection and maintenance of mangrove forests and related natural vegetational communities. - The proposed project does not involve work in mangrove forests or related natural vegetational communities.

Objective 1/Policy 1E - Mitigation for the degradation and destruction of coastal wetlands. Monitoring and maintenance of mitigation areas. – The proposed project will not result in the degradation or destruction of coastal wetlands and therefore does not involve monitoring of mitigation for impacts to coastal wetlands.

Objective 1/Policy 1G - Prohibition on dredging or filling of grass/algal flats, hard bottom or other viable benthic communities, except as provided for in Chapter 24 of the Code of Miami-Dade County, Florida. – The proposed project does not involve dredging or filling of grass/algal flats, hard bottom, or other viable benthic communities.

Objective 2/Policies 2A, 2B - Beach restoration and renourishment objectives. - The proposed project does not involve beach restoration or renourishment.

Objective 3/Policies 3E, 3F - Location of new cut and spoil areas for proper stabilization and minimization of damages. - The proposed project does not involve the development or identification of new cut or spoil areas.

Objective 4/Policy 4A, 4C, 4E, 4F – Protection of endangered or threatened animal species. - The proposed project is not reasonably expected to affect endangered or threatened animal species, as set forth in Number 18 above.

Objective 5/Policy 5B - Existing and new areas for water-dependent uses. - The proposed project is not reasonably expected to adversely affect existing water-dependent use.

Objective 5/Policy 5D - Consistency with Chapter 33D, Miami-Dade County Code (shoreline access, environmental compatibility of shoreline development) – The proposed project is not within the review boundaries of the Shoreline Development Review Committee.

Objective 5/Policy 5F - The siting of water dependent facilities. - The proposed project does not involve the creation of any new water dependent facilities.

28. **Conformance with Chapter 33B, Code of Miami-Dade County** (East Everglades Zoning Overlay Ordinance) – The proposed project is not located within the East Everglades Area.

29. **Conformance with Miami-Dade County Ordinance 81-19** (Biscayne Bay Management Plan Sections 33D-1 through 33D-4 of the Code of Miami-Dade County) – The proposed project is not located within Biscayne Bay.

30. **Conformance with the Miami-Dade County Manatee Protection Plan** - The proposed project is not located within an area designated as essential manatee habitat by the MPP and the proposed project is not reasonably expected to adversely impact manatees.

31. **Consistency with Miami-Dade County Criteria for Lake Excavation** – The proposed project does not involve lake excavation.

32. **Municipality Recommendation** – Pursuant to Section 24-48.2(II)(B)(7), Code of Miami-Dade County, Florida, a substantiating letter shall be submitted stating that the proposed project does not violate any zoning laws. Said letter will be submitted after the approval by the Board of County Commissioners and prior to the issuance of the Class I permit.

33. **Coastal Resources Management Line** - A coastal resources management line was not required for the proposed project, pursuant to Section 24-48.2(II)(B)(10)(b) of the Code of Miami-Dade County.

34. **Maximum Protection of a Wetland's Hydrological and Biological Functions** – The proposed project is not located within wetlands.

35. **Class I Permit Applications Proposing to Exceed the Boundaries Described in Section D-5.03(2)(a) of the Miami-Dade County Public Works Manual** – Not Applicable.

The proposed project was also evaluated for compliance with the standards contained in Sections 24-48.3(2),(3), and (4) of the Code of Miami-Dade County, Florida. The following is a summary of how the standards relate to the proposed project:

24-48.3 (2) Dredging and Filling for Class I Permit – The proposed project is not in compliance with the dredge and fill criteria as specified in Section 24-48.3 of the Code. However, the applicant requested a variance to the Code from the Environmental Quality Control Board which was granted on September 10, 2014.

24-48.3 (3) Minimum Water Depth Required for Boat Slips Created by the Construction or Placement of Fixed or Floating Docks and Piers, Piles and Other Structures Requiring a Permit Under Article IV, Division 1 of Chapter 24 of the Code of Miami-Dade County – The proposed project does not involve the creation of boat slips.

24-48.3 (4) Clean Fill in Wetlands – Not Applicable.

BASED ON THE FOREGOING, IT IS RECOMMENDED THAT A CLASS I PERMIT BE APPROVED.

Lisa Spadafina, Chief
Natural Resources Division

Alain Alonso, Biologist II
Coastal and Wetlands Resources Section