OFFICIAL FILE COPY
CLERK OF THE BOARD
OF COUNTY COMMISSIONERS
MIAMI-DADE COUNTY, FLORIDA

Memorandum

MIAMI-DADE COUNTY

Agenda Item No. 5(E)

Date: November 17, 2015

To: Honorable Chairman Jean Monestime
and Members, Board of County Commissioners

From: Carlos A. Gimenez
Mayor

Subject: Class I Permit Application and Request for a Variance from Section 24-48.23 of the Code of Miami-Dade County by Whole New World Foundation, Inc. for the Placement of a Barge for Non-Water-Dependent Use over Tidal Waters at 1095 Biscayne Boulevard, Miami, Florida

Resolution No. R-1032-15

Attached please find for your consideration an application by Whole New World Foundation, Inc. for a Class I permit and a variance from Section 24-48.23 of the Code of Miami-Dade County. Also attached is the recommendation of the Department of Regulatory and Economic Resources, Division of Environmental Resources Management, and a proposed resolution approving the variance and the issuance of the Class I permit.

Jack Osterholt
Deputy Mayor

Memorandum

MIAMI-DADE COUNTY

Date: November 4, 2015

To: Carlos A. Gimenez
Mayor

From: Jack Osterholt, Deputy Mayor/Director
Department of Regulatory and Economic Resources

Subject: Class I Permit Application and Request for a Variance from Section 24-48.23 of the Code of Miami-Dade County by Whole New World Foundation, Inc. for the Placement of a Barge for Non-Water-Dependent Use over Tidal Waters at 1095 Biscayne Boulevard, Miami, Florida

---

Recommendation

I have reviewed the attached application for a Class I permit and a variance by Whole New World Foundation, Inc. Based upon the applicable evaluation factors set forth in Sections 24-48.3 and 24-48.25 of the Code of Miami-Dade County (Code), I recommend that the Board of County Commissioners (Board) approve the issuance of a Class I permit and variance request for the reasons set forth below.

Scope

The project site is located at 1095 Biscayne Boulevard, Miami, Florida in Commission District 3, which is represented by Commissioner Audrey M. Edmonson.

Fiscal Impact/Funding Source

This resolution is a regulatory approval and does not have a fiscal impact on the County, as contemplated by Resolution No. R-530-10.

Track Record/Monitor

The Natural Resources Division Chief in the Division of Environmental Resources Management of the Department of Regulatory and Economic Resources, Lisa Spadafina, will be responsible for monitoring the proposed permit.

Background

This Class I permit application and request for a variance seeks authorization for the placement of a barge over tidal waters for non-water dependent use at 1095 Biscayne Boulevard in the City of Miami. The proposed project is required to be reviewed and approved by the Board at a public hearing because Section 24-48.23 of the Code prohibits non-water-dependent floating structures. Therefore, a variance from the Code, including a standard form application and a public hearing, is required.

The applicant is proposing to place the "Miami Science Barge" (the Barge) within a "notched" area along the seawall on the east side of Museum Park, adjacent to Biscayne Bay, with a gangway to provide access from land. The Barge will support a self-sustaining floating laboratory and environmental education center intended to provide an urban connection to marine conservation and sustainability on Biscayne Bay for students and other patrons. The learning tools and activities on the Barge will promote understanding and stewardship of local ecosystems, with proposed exhibits including hatching tanks, a coral nursery and aquaponics. The Barge will be powered by renewable energy such as solar, wind and biofuel.

The Barge is initially proposed to be in place for approximately two (2) years. However, a standard form Class I permit is valid for a period of three (3) years, and the applicant may also request permit extensions in accordance with Section 24-48.9 of the Code.

Section 24-48.25 of the Code lists consideration factors for such variance requests for non-water-dependent floating structures, including but not limited to: visual or physical access by the general public to Biscayne Bay and its adjacent tidal waters, historical significance, environmental impact, navigation, public safety and aesthetics. The Barge will not limit visual or physical access to Biscayne Bay for the general public, and will improve visual and physical access for students and other patrons. The Barge is not reasonably expected to impact navigation, as it will be located within a "notched" area along the seawall outside of navigational channels. Additionally, staff have evaluated the remaining factors for consideration and determined that the proposed project is not reasonably expected to result in adverse environmental impacts. The area where the Barge will be located does not provide significant habitat value, as no submerged aquatic vegetation or other significant benthic resources were documented in the footprint of the proposed Barge location. Because the proposed project is not reasonably expected to result in adverse environmental impacts, offsetting mitigation is not required. The programs to be implemented on the Barge are designed to be self-sustaining and fully contained. The applicant has provided an operating plan that adequately addresses how the facility and activities will be managed such that the use of the Barge and associated activities will not result in the discharge of pollutants or solid wastes to tidal waters, and to safeguard against any such discharges to tidal waters, the applicant has included an impermeable border around aquatic displays. In addition, the conditions of the Class I permit will require that best management practices be implemented throughout the duration of the authorized activities. For these reasons, the variance for the use of the barge as a non-water-dependent floating structure is recommended for approval.

The proposed project site is not located within an area designated as essential habitat for the West Indian Manatee by the Miami-Dade County Manatee Protection Plan. However, the Class I permit will require that all standard manatee construction conditions be followed during all in-water operations. Furthermore, the Barge will be secured in a location that provides greater than four (4) feet of standoff from the bulkhead at all times. The proposed barge location is within an area designated as Critical Habitat for Johnson's Seagrass, a federally listed threatened species, but seagrasses were not documented below the proposed barge location. The project is not reasonably expected to result in adverse impacts to Johnson's Seagrass or Critical Habitat for Johnson's Seagrass.

The proposed project has been designed in accordance with all other relevant Miami-Dade County coastal construction criteria and is consistent with all other Miami-Dade County coastal protection provisions. The attached Project Report sets forth the reasons the proposed project is recommended for approval pursuant to the applicable evaluation factors set forth in Sections 24-48.3 and 24-48.25 of the Code. The conditions, limitations, and restrictions set forth in the attached Project Report are incorporated herein by reference.

Attachments
Attachment A: Class I Permit Application
Attachment B: Owner/Agent Letter, Engineer Certification Letter, and Project Sketches
Attachment C: Zoning Memorandum
Attachment D: RER-DERM Project Report

MEMORANDUM

(Revised)

TO: Honorable Chairman Jean Monestime
and Members, Board of County Commissioners

DATE: November 17, 2015

FROM: Abigail Price-Williams
County Attorney

SUBJECT: Agenda Item No. 5(E)

Please note any items checked.

_____ **"3-Day Rule" for committees applicable if raised**

_____ **6 weeks required between first reading and public hearing**

_____ **4 weeks notification to municipal officials required prior to public hearing**

_____ **Decreases revenues or increases expenditures without balancing budget**

_____ **Budget required**

_____ **Statement of fiscal impact required**

_____ **Statement of social equity required**

_____ **Ordinance creating a new board requires detailed County Mayor's report for public hearing**

✓ **No committee review**

_____ **Applicable legislation requires more than a majority vote (i.e., 2/3's ____, 3/5's ____, unanimous _____) to approve**

_____ **Current information regarding funding source, index code and available balance, and available capacity (if debt is contemplated) required**

Approved _____ Mayor
Veto _____
Override _____

Agenda Item No. 5(E)
11-17-15

RESOLUTION NO. R-1032-15

RESOLUTION APPROVING A CLASS I PERMIT APPLICATION AND REQUEST FOR A VARIANCE FROM SECTION 24-48.23 OF THE CODE OF MIAMI-DADE COUNTY BY WHOLE NEW WORLD FOUNDATION, INC. FOR THE PLACEMENT OF A BARGE FOR NON-WATER-DEPENDENT USE OVER TIDAL WATERS AT 1095 BISCAYNE BOULEVARD, MIAMI, FLORIDA

WHEREAS, this Board desires to accomplish the purposes outlined in the accompanying memorandum, a copy of which is incorporated herein by reference,

NOW, THEREFORE, BE IT RESOLVED BY THE BOARD OF COUNTY COMMISSIONERS OF MIAMI-DADE COUNTY, FLORIDA, that this Board having considered all the applicable factors contained within Sections 24-48.3 and 24-48.25 of the Code of Miami-Dade County, hereby approves the application by Whole New World Foundation, Inc. for a Class I permit and a variance from Section 24-48.23 of the Code of Miami-Dade County for the placement of a Barge for non-water-dependent use over tidal waters at 1095 Biscayne Boulevard, Miami, Florida, subject to the conditions set forth in the memorandum from the Miami-Dade County Department of Regulatory and Economic Resources, a copy of which is attached hereto and made a part hereof. The issuance of this approval does not relieve the applicant from obtaining all applicable Federal, State, and local permits.

The foregoing resolution was offered by Commissioner **Audrey M. Edmonson**, who moved its adoption. The motion was seconded by Commissioner **Rebeca Sosa** and upon being put to a vote, the vote was as follows:

Jean Monestime, Chairman	**aye**		
Esteban L. Bovo, Jr., Vice Chairman	**absent**		
Bruno A. Barreiro	**aye**	Daniella Levine Cava	**aye**
Jose "Pepe" Diaz	**aye**	Audrey M. Edmonson	**aye**
Sally A. Heyman	**absent**	Barbara J. Jordan	**aye**
Dennis C. Moss	**aye**	Rebeca Sosa	**aye**
Sen. Javier D. Souto	**aye**	Xavier L. Suarez	**absent**
Juan C. Zapata	**aye**		

The Chairperson thereupon declared the resolution duly passed and adopted this 17th day of November, 2015. This resolution shall become effective upon the earlier of (1) 10 days after the date of its adoption unless vetoed by the County Mayor, and if vetoed, shall become effective only upon an override by this Board, or (2) approval by the County Mayor of this Resolution and the filing of this approval with the Clerk of the Board.

MIAMI-DADE COUNTY, FLORIDA
BY ITS BOARD OF
COUNTY COMMISSIONERS

HARVEY RUVIN, CLERK

By: Christopher Agrippa
Deputy Clerk

Approved by County Attorney as
to form and legal sufficiency.

Abbie Schwaderer-Raurell

Attachment A

Class I Permit Application

MIAMI-DADE COUNTY

Class I Permit Application

FOR DEPARTMENTAL USE ONLY

Date Received: RECEIVED OCT 15 2015	Application Number: CLI-2015-0280 Application Fee: $470.00

Application must be filled out in its entirety. Please indicate N/A for non-applicable fields.

1. Applicant Information: Name: Whole New World Foundation, Inc. Address: 3439 Main Highway, Suite 2 Miami, Florida Zip Code: 33133 Phone #: Fax#: Email: tedcaplow@cappsol.org * This should be the applicant's information for contact purposes.	**2. Applicant's Authorized Permit Agent:** Agent is allowed to process the application, furnish supplemental information relating to the application and bind the applicant to all requirements of the application. Name: Address: Zip Code: Phone #: Fax #: Email:

3. Location where proposed activity exists or will occur (latitude and longitude are only necessary for properties without address or folio #):

Folio #(s): 01-4137-073-0010 Latitude: 25°47'20"N Longitude: 80°11'07" W
Street Address: 1095 Biscayne Boulevard Section: 31 Township: 53S Range: 42E
In City or Town: Miami Near City or Town:
Name of waterway at location of the activity: Biscayne Bay

4. Describe the proposed activity (check all that apply):

- ☐ Seawall
  - ☐ New/Replacement Seawall
  - ☐ Seawall Cap
  - ☐ Batter Piles
  - ☐ King Piles
  - ☐ Footer/Toe Wall
  - ☐ Riprap
- ☐ Dock(s)
- ☐ Pier(s)
- ☐ Viewing Platform
- ☐ Boatlift
- ☐ Mooring Piles
- ☐ Fender Piles
- ☐ Davits
- ☐ Dredging
  - ☐ Maintenance
  - ☐ New
- ☐ Filling
- ☐ Mangrove Trimming
- ☐ Mangrove Removal

X Other: Variance request for the installation of a barge and upland connection that will provide for non-water dependent uses.

Estimated project cost = $5,000.00

Are you seeking an after-the-fact approval (ATF)? ☐Yes X No If "Yes", describe the ATF work:

5. Proposed Use (check all that apply):

- ☐ Single Family
- ☐ Multi-Family
- X Private
- ☐ Public
- ☐ Commercial
- ☐ Industrial
- ☐ Utility

6. If the proposed work relates to the mooring of vessels provide the following information (please also indicate if the applicant does not have a vessel):

Proposed Vessel Type (s): Barge
Vessel Make/Model (If known): Graymar113
Draft (s)(range in inches.): Maximum of 60" Length (s)(range in feet.): 115'
Total Number of Slips: 0

7. List all permits or certifications that have been applied for or obtained for the above referenced work:

Issuing Agency	Type of Approval	Identification Number	Application Date	Approval Date

Revised 11/16/09

8. Contractor Information (If known):

Name: To be determined License # (County/State): _____

Address: _____ Zip Code: _____

Phone #: _____ Fax # _____ E-mail: _____

9. **IMPORTANT NOTICE TO APPLICANTS**: The written consent of the property owner is required for all applications to be considered complete. Your application WILL NOT BE PROCESSED unless the Applicant **and** Owner Consent portion of the application is completed below. You have the obligation to apprise the Department of any changes to information provided in this application.

Application is hereby made for a Miami-Dade County Class I permit to authorize the activities described herein. I agree to or affirm the following:

- I possess the authority to authorize the proposed activities at the subject property, and
- I am familiar with the information, data and plans contained in this application, and
- To the best of my knowledge and belief, the information, data and plans submitted are true, complete and accurate, and
- I will provide any additional information, evidence or data necessary to provide reasonable assurance that the proposed project will comply with the applicable State and County water quality standards both during construction and after the project is completed, and
- I am authorizing the permit agent listed in Section 2 of this application to process the application, furnish supplemental information relating to this application and bind the applicant to all requirements of this application, and
- I agree to provide access and allow entry to the project site to inspectors and authorized representatives of Miami-Dade County for the purpose of making the preliminary analyses of the site and to monitor permitted activities and adherence to all permit conditions.

A. IF APPLICANT IS AN INDIVIDUAL

Signature of Applicant | Print Applicant's Name | Date

B. IF APPLICANT IS OTHER THAN AN INDIVIDUAL OR NATURAL PERSON
(Examples: Corporation, Partnership, Trust, LLC, LLP, etc.)

Whole New World Foundation, Inc.	Corporation	Delaware
Print Name of Applicant (Enter the complete name as registered)	Type (Corp, LLC, LLP, etc.)	State of Registration/Incorporation

Under the penalty of perjury, I certify that I have the authority to sign this application on behalf of the Applicant, to bind the Applicant, and if so required to authorize the issuance of a bond on behalf of the Applicant. (If asked, you must provide proof of such authority to the Department). ***Please Note: If additional signatures are required, pursuant to your governing documents, operating agreements, or other applicable agreements or laws, you must attach additional signature pages. ***

Signature of Authorized Representative	Ted Caplow	Vice President	10/9/2015
	Print Authorized Representative's Name	Title	Date

C. IF APPLICANT IS A JOINT VENTURE Each party must sign below(If more than two members, list on attached page)

Print Name of Applicant (Enter the complete name as registered) | Type (Corp, LLC, LLP, etc.) | State of Registration/Incorporation

Print Name of Applicant (Enter the complete name as registered) | Type (Corp, LLC, LLP, etc.) | State of Registration/Incorporation

Under the penalty of perjury, I certify that I have the authority to sign this application on behalf of the Applicant, to bind the Applicant, and if so required to authorize the issuance of a bond on behalf of the Applicant. (If asked, you must provide proof of such authority to the Department). ***Please Note: If additional signatures are required, pursuant to your governing documents, operating agreements, or other applicable agreements or laws, you must attach additional signature pages. ***

Signature of Authorized Representative | Print Authorized Representative's Name | Title | Date

Signature of Authorized Representative | Print Authorized Representative's Name | Title | Date

RECEIVED
OCT 15 2015
DERM
Environmental Resources Regulation Division

10. WRITTEN CONSENT OF THE PROPERTY OWNER OF THE AREA OF THE PROPOSED WORK

I/We are the fee simple owner(s) of the real property located at 1095 Biscayne Boulevard and the submerged lands located within Deed No. 19447, Miami, Miami-Dade County, Florida, otherwise identified in the public records of Miami-Dade County as Folio No. 01-4137-073-0010. I am aware and familiar with the contents of this application for a Miami-Dade County Class I Permit to perform the work on or adjacent to the subject property, as described in Section 4 of this application. I possess the riparian rights to the area of the proposed work (if applicable) and hereby consent to the work identified in this Class I Permit application.

A. IF THE OWNER(S) IS AN INDIVIDUAL

Signature of Owner	Print Owner's Name	Date
Signature of Owner	Print Owner's Name	Date

B. IF THE OWNER IS OTHER THAN AN INDIVIDUAL OR NATURAL PERSON
(Examples: Corporation, Partnership, Joint Venture, Trust, LLC, LLP, etc.)

Print Name of Owner (Enter the complete name as registered)	Type (Corp, LLC, LLP, etc.)	State of Registration/Incorporation
City of Miami	Government	Florida

Address of Owner: 3500 Pan American Drive, Miami, Florida

Under the penalty of perjury, I certify that I have the authority to sign this application on behalf of the Owner, to bind the Owner, and if so required to authorize the issuance of a bond on behalf of the Owner. (If asked, you must provide proof of such authority to the Department). ***Please Note: If additional signatures are required, pursuant to your governing documents, operating agreements, or other applicable agreements or laws, you must attach additional signature pages. ***

Signature of Authorized Representative	Print Authorized Representative's Name	Title	Date
	Daniel J. Alfonso	City Manager	10-13-15
Signature of Authorized Representative	Print Authorized Representative's Name	Title	Date

Please Review Above

Appropriate signature(s) must be included in:

Box 9: either A, B or C

AND

Box 10: either A or B

RECEIVED
OCT 15 2015
DERM
Environmental Resources Regulation Division

Revised 11/16/09

10

Attachment B

Owner/Agent Letter, Engineer Certification Letter, and Project Sketches

PERMIT APPLICANT / AUTHORIZED AGENT STATEMENT

Date: 9/15/2015

Miami Dade County Department of Regulatory and Economic Resources
Class I Permitting Program
701 NW 1st Court
Miami, FL 33136

Re: Class I Standard Form Permit Application Number CLI-2015-0280

By the attached Class I Standard Form permit application with supporting documents, I, Ted Caplow, Vice President, Whole New World Foundation, Inc., am the permit applicant and hereby request permission to perform the work associated with Class I Permit Application CLI-2015-0280. I understand that a Miami-Dade County Class I Standard Form Permit is required to perform this work.

If approval is granted for the proposed work by the Board of County Commissioners, complete and detailed plans and calculations of the proposed work shall be prepared by an engineer licensed in the State of Florida in accordance with the minimum requirements of Chapter 24 of the Code of Miami-Dade County, Florida. Said plans and calculations shall be subject to the review and approval of the Department. The permit applicant will secure the services of an engineer licensed in the State of Florida to conduct inspections throughout the construction period, and said engineer shall prepare all required drawings of record. In the event that the proposed work which is the subject of this Class I Permit application involves the cutting or trimming of a mangrove tree(s), a detailed plan of the proposed cutting or trimming shall be prepared by a licensed landscape architect and submitted to the Department for review and approval, and the permit applicant will secure the services of a licensed landscape architect to supervise the trimming or cutting.

Respectfully submitted,

Ted Caplow, Vice President,
Whole New World Foundation, Inc.
Permit Applicant

ENGINEER LETTER OF CERTIFICATION

Date: 09/20/15

Miami-Dade County Department of Regulatory and Economic Resources
Class I Permitting Program
701 NW 1st Court
Miami, Florida 33136

RE: Class I Permit Application Number CLI-2015-0280

Ladies and Gentlemen:

This letter will certify that I am an engineer licensed in the State of Florida, qualified by education and experience in the area of engineering design and inspection, and that to the best of my knowledge and belief, the proposed work does not violate any laws, rules, or regulations of the State of Florida or any provisions of the Code of Miami-Dade County which may be applicable; that diligence and recognized standard practices of the engineering profession have been exercised in the engineer's design of the proposed work; and in my opinion based upon my knowledge and belief, the following will not occur:

a. Harmful obstruction or undesirable alteration of the natural flow of the water within the area of the proposed work.

b. Harmful or increased erosion, shoaling of channels or stagnant areas of water. (Not applicable to Class IV permits)

c. Material injury to adjacent property.

d. Adverse environmental impacts from changes in water quality or quantity. (Applicable to Class IV permits only)

Further, I have been retained by the applicant to provide inspections throughout the construction period and to prepare a set of reproducible record prints of drawings showing changes made during the construction process based upon the marked-up prints, certified surveys, drawings, and other data furnished by the contractor to me.

Sincerely,

Robert J. Norton PE FL. Reg. 54750

Digitally signed by Robert J. Norton PE FL. Reg. 54750
Date: 2015.09.20 23:04:28 -04'00'

P.E. #____

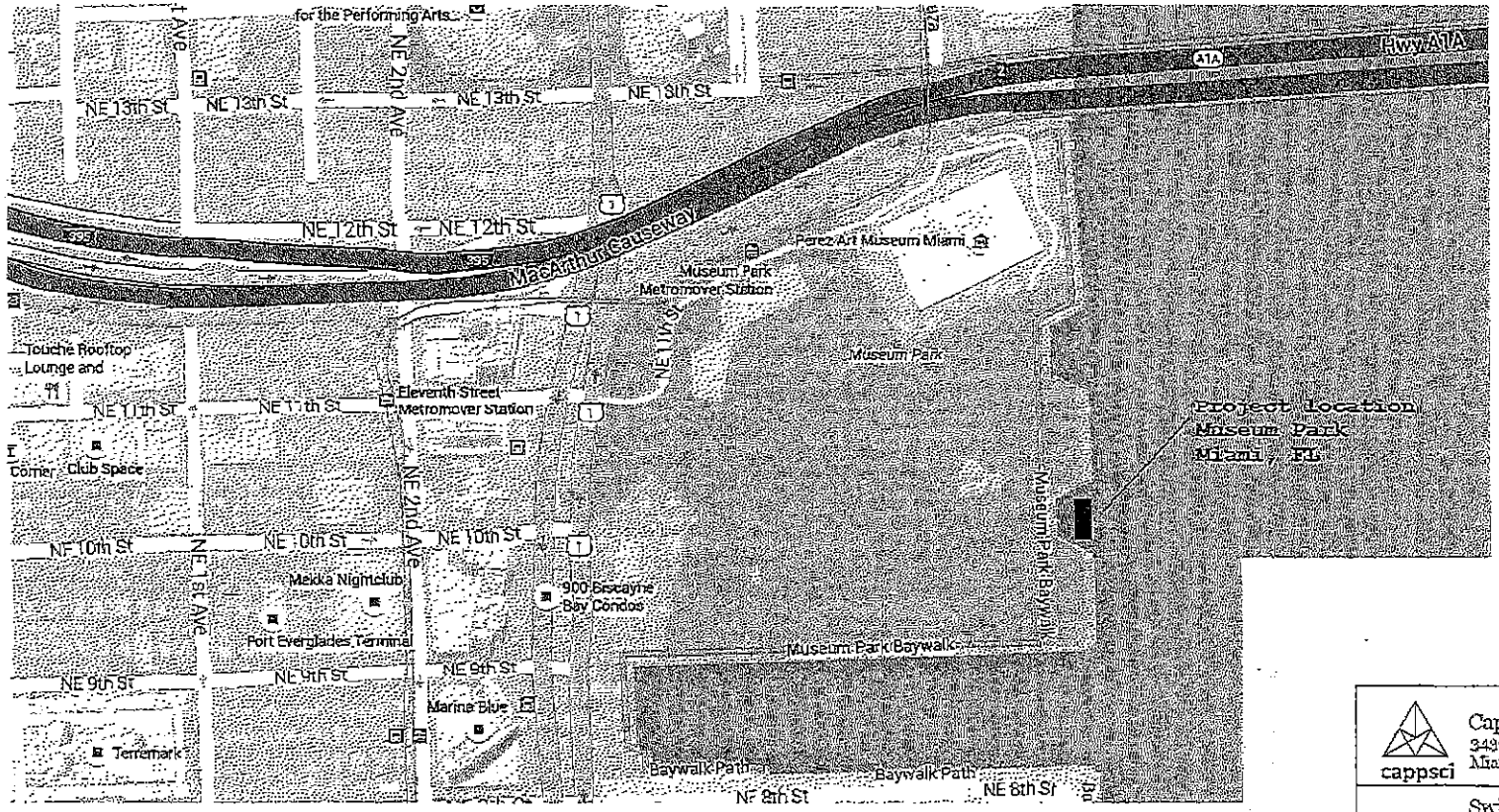

CappSci
3439 Main Highway
Miami, FL 33133
cappsci

Swiftwater Consultants
2515 West Palm Avenue
Tampa, FL 33629

MIAMI SCIENCE BARGE

Vicinity Plan

Sep 11 2015
N.T.S.

S1

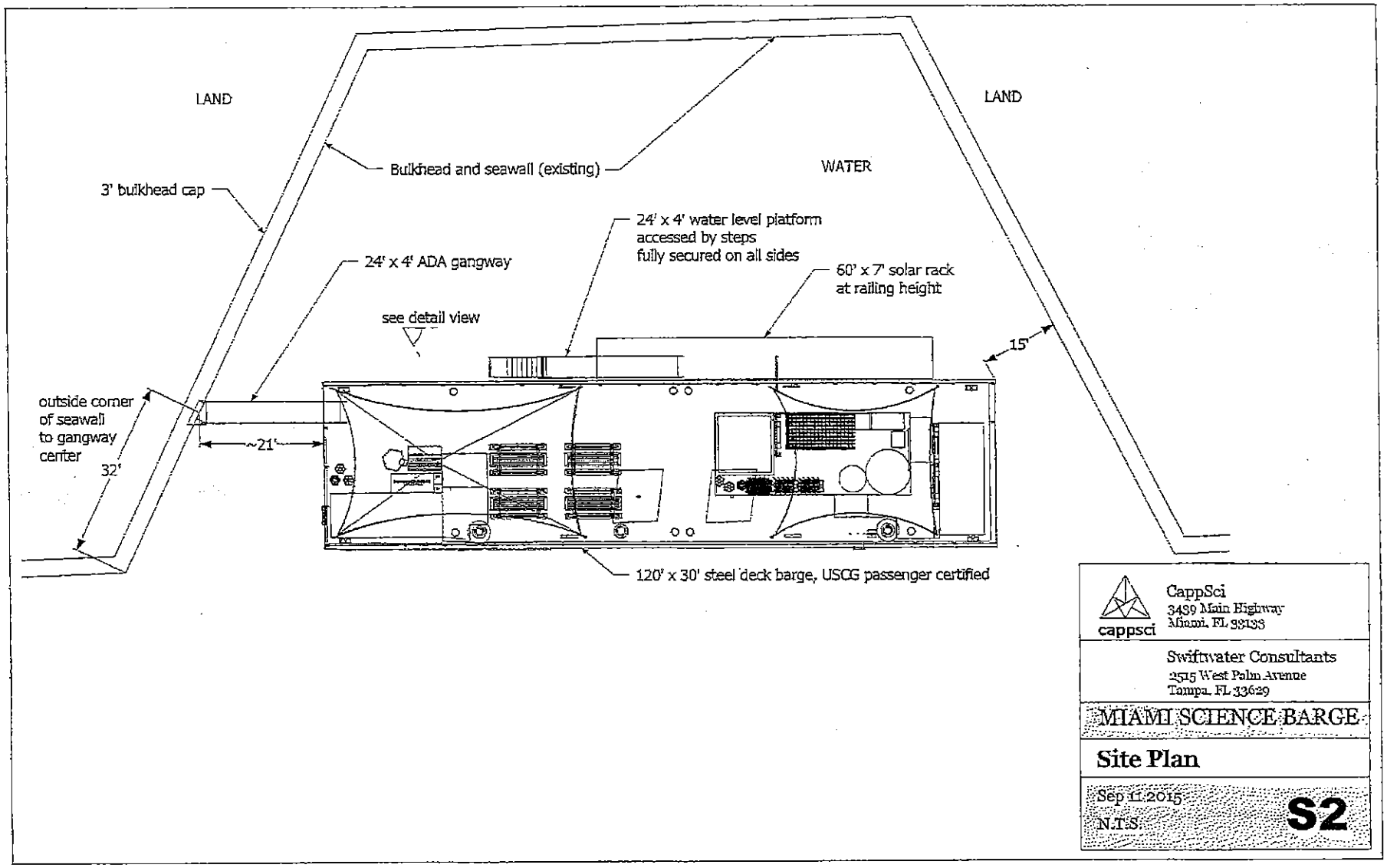

CappSci
3489 Main Highway
Miami, FL 33133

Swiftwater Consultants
2515 West Palm Avenue
Tampa, FL 33629

MIAMI SCIENCE BARGE

Site Plan

Sep 11 2015
N.T.S.

S2

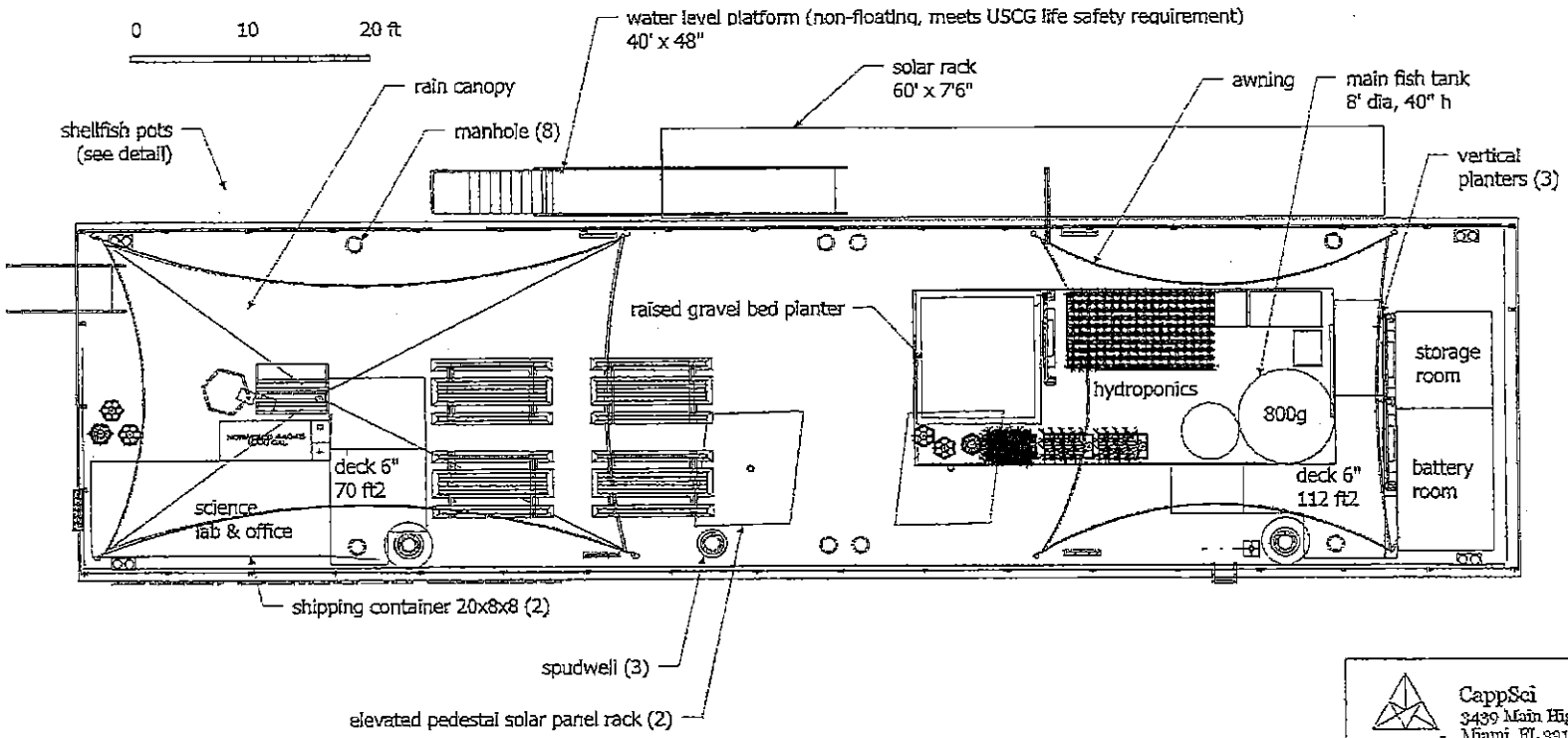

cappsci

CappSci
3439 Main Highway
Miami, FL 33133

Swiftwater Consultants
2515 West Palm Avenue
Tampa, FL 33629

MIAMI SCIENCE BARGE

Deck Plan

Sep 11 2015

N.T.S.

A1

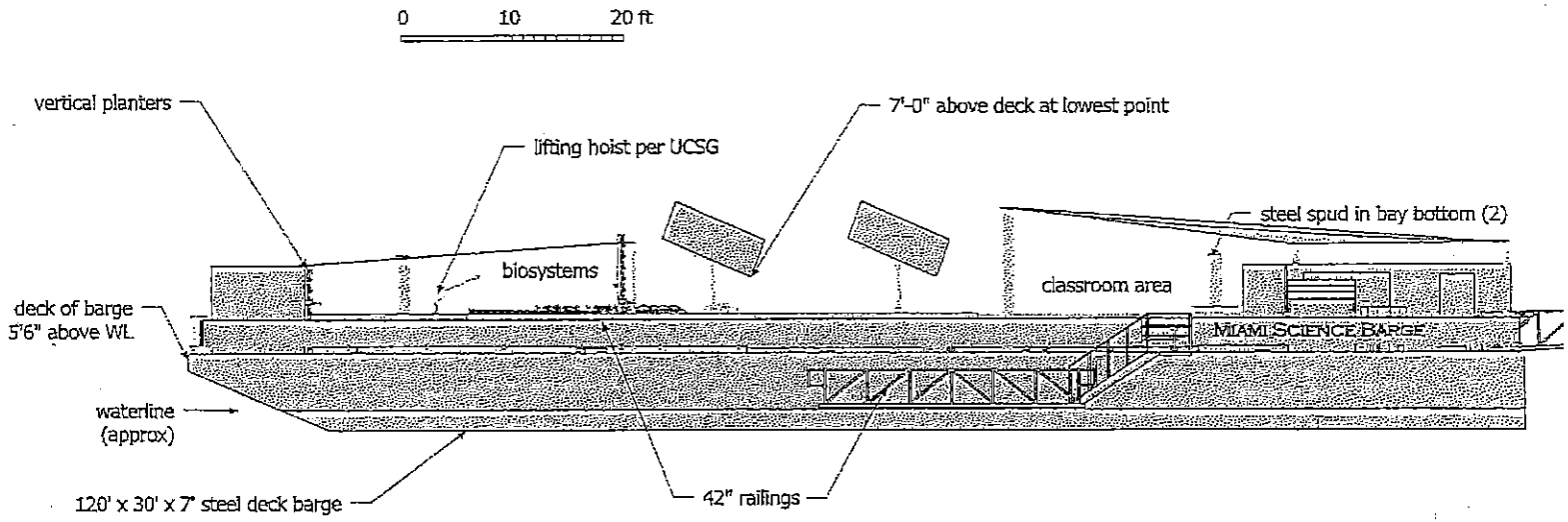

CappSci
3439 Main Highway
Miami, FL 33133

Swiftwater Consultants
2515 West Palm Avenue
Tampa, FL 33629

MIAMI SCIENCE BARGE

Outboard Profile

Sep 11 2015

N.T.S.

A2

4

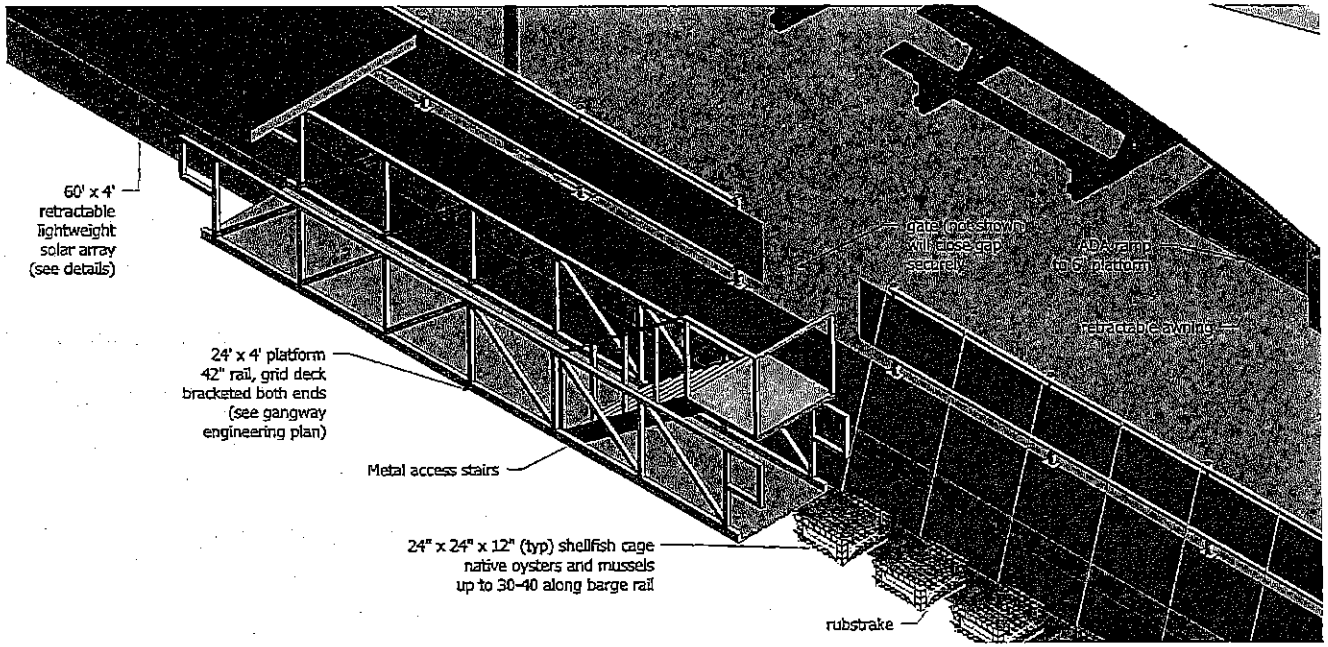

cappsci

CappSci
3439 Main Highway
Miami, FL 33133

Swiftwater Consultants
2515 West Palm Avenue
Tampa, FL 33629

MIAMI SCIENCE BARGE

Port outboard details

Sep 11 2015

N.T.S.

A3

18

Attachment C

Zoning Memorandum

Memorandum

MIAMI-DADE COUNTY

Date: October 20, 2015

To: Lisa Spadafina, Chief
Natural Resources Division
Department of Regulatory and Economic Resources

From: Christine Hopps, ERPS
Coastal and Wetlands Resources Section
Department of Regulatory and Economic Resources

Subject: Class I Permit Application and Request for a Variance from Section 24-48.23 of the Code of Miami-Dade County by Whole New World Foundation, Inc. for the Placement of a Barge for Non-Water-Dependent Use over Tidal Waters at 1095 Biscayne Boulevard, Miami, Florida

---

Pursuant to Section 24-48.2(II)(B)(7), of the Code of Miami-Dade County, Florida, a substantiating letter shall be submitted by the applicant stating that the proposed project does not violate any zoning laws. Said letter will be submitted after approval by the Miami-Dade County Board of County Commissioners and prior to issuance of the Class I permit.

Attachment D

RER-DERM Project Report

PROJECT REPORT
CLASS I PERMIT APPLICATION NO. CLI-2015-0280

Class I Permit Application and Request for a Variance from Section 24-48.23 of the Code of Miami-Dade County by Whole New World Foundation, Inc. for the Placement of a Barge for Non-Water-Dependent Use over Tidal Waters at 1095 Biscayne Boulevard, Miami, Florida

Date: October 9, 2015

Staff's recommendation of approval for the above-referenced permit application is based on the applicable evaluation factors under Section 24-48.3 of the Code of Miami-Dade County, Florida. The following is a summary of the proposed project with respect to each applicable evaluation factor:

1. **Potential Adverse Environmental Impact** – The proposed project is not reasonably expected to result in adverse environmental impacts. The area where the Miami Science Barge (Barge) will be located does not provide significant habitat value, as no submerged aquatic vegetation or other significant benthic resources were documented in the footprint of the proposed Barge location. The programs that will be implemented on the Barge are designed to be self-sustaining and fully contained. The applicant has provided an operating plan that adequately addresses how the facility and activities will be managed such that the use of the Barge and associated activities will not result in the discharge of pollutants or solid wastes to tidal waters, and to safeguard against any such discharges to tidal waters, the applicant has included an impermeable border around aquatic displays. In addition, the conditions of the Class I permit will require that best management practices be implemented throughout the duration of the authorized activities.

   The proposed project site is not located within an area designated as essential habitat for the West Indian Manatee by the Miami-Dade County Manatee Protection Plan (MPP). However, the Class I permit will require that all standard manatee construction conditions be followed during all in-water operations. Furthermore, the Barge will be secured in a location that provides greater than four (4) feet of standoff from the bulkhead at all times. The location where the Barge will be secured is within an area designated as Critical Habitat for Johnson's Seagrass (*Halophila johnsonii*), a Federally listed threatened species; however, seagrasses were not documented within the footprint of the proposed project and the project is not reasonably expected to result in adverse impacts to Johnson's Seagrass or Critical Habitat for Johnson's Seagrass.

2. **Potential Cumulative Adverse Environmental Impact** – The proposed project is not reasonably expected to result in cumulative adverse environmental impacts.

3. **Hydrology** - The proposed project is not reasonably expected to adversely affect surface water drainage or retention of stormwater.

4. **Water Quality** – The proposed project is not reasonably expected to adversely affect water quality.

5. **Wellfields** – The proposed project is not reasonably expected to adversely affect wellfields.

6. **Water Supply** – The proposed project is not reasonably expected to adversely affect water supply.

7. **Aquifer Recharge** – The proposed project is not reasonably expected to adversely affect aquifer recharge.

8. **Aesthetics** – The proposed project is not reasonably expected to have negative aesthetic impacts.

9. **Navigation** – The proposed project is not reasonably expected to adversely affect navigation.

10. **Public Health** - The proposed project is not reasonably expected to adversely affect public health.

11. **Historic Values** - The proposed project is not reasonably expected to adversely affect historic values.

12. **Archaeological Values** - The proposed project is not reasonably expected to adversely affect archaeological values.

13. **Air Quality** – The proposed project is not reasonably expected to adversely affect air quality.

14. **Marine and Wildlife Habitats** – The proposed project is not reasonably expected to adversely affect marine and wildlife habitats, as set forth in Number 1 above.

15. **Wetland Soils Suitable for Habitat** – The proposed project does not involve any work in wetland soils.

16. **Floral Values** – The proposed project is not reasonably expected to adversely affect marine flora as set forth in Number 1 above.

17. **Fauna Values** - The proposed project is not reasonably expected to adversely affect marine fauna as set forth in Number 1 above.

18. **Rare, Threatened and Endangered Species** – The proposed project is not reasonably expected to adversely affect rare, threatened, and endangered species as set forth in Number 1 above.

19. **Natural Flood Damage Protection** - The proposed project is not reasonably expected to adversely affect surface water drainage or retention of stormwater.

20. **Wetland Values** –The proposed project does not involve work in wetlands.

21. **Land Use Classification** – Pursuant to Section 24-48.2(II)(B)(7), of the Code of Miami-Dade County, Florida, a substantiating letter shall be submitted stating that the proposed project does not violate any zoning laws. Said letter will be submitted after the approval by the Board of County Commissioners and prior to the issuance of a Class I permit.

22. **Recreation** - The proposed project does not conflict with the recreation element of the Miami-Dade County Comprehensive Development Master Plan.

23. **Other Environmental Values Affecting the Public Interest** – The proposed project is not reasonably expected to adversely affect other environmental values affecting the public interest. The proposed project will occur on lands owned by the City of Miami.

24. **Conformance with Standard Construction Procedures and Practices and Design and Performance Standards** – The proposed project includes the installation of a non-water-dependent floating structure. However, the applicant is requesting a variance to the water dependency requirement of the Code, and the operations on the Barge are not reasonably expected to result in adverse environmental impacts.

25. **Comprehensive Environmental Impact Statement (CEIS)** - In the opinion of the Director, the proposed project is not reasonably expected to result in significant adverse environmental impacts or cumulative adverse environmental impacts. Therefore, a CEIS was not required by RER-DERM to evaluate the project.

26. **Conformance with All Applicable Federal, State and Local Laws and Regulations** - The proposed project is in conformance with applicable State, Federal and local laws and regulations:
    a) Chapter 24 of the Code of Miami-Dade County (variance is required)
    b) United States Clean Water Act (US Army Corps of Engineers permit or exemption is required)
    c) Florida Department of Environmental Protection (FDEP regulatory authorization or exemption is required)

27. **Conformance with the Miami-Dade County Comprehensive Development Master Plan (CDMP)** - In the opinion of the Director, the proposed project is not in full conformance with the CDMP. However, the applicant is requesting a variance from the Section of Code relating to the non-water-dependent structure as it pertains to the proposed project. The following is a summary of the proposed project as it relates to the CDMP:

LAND USE ELEMENT I:

Objective 3/Policies 3A, 3B, 3C - Protection of natural resources and systems. – The proposed project is consistent with the Conservation and Coastal Management Elements of the CDMP. The proposed project is compatible with surrounding land uses in Biscayne Bay and does not involve development in the Big Cypress area of Critical State Concern or the East Everglades.

TRANSPORTATION ELEMENT II

Aviation Subelement/Objective 5 - Aviation System Expansion - There is no aviation element to the proposed project.

Port of Miami River Subelement/Objective 3 - Minimization of impacts to estuarine water quality and marine resources. The proposed project is not located within the Miami River.

CONSERVATION, AQUIFER RECHARGES AND DRAINAGE ELEMENT IV:

Objective 3/Policies 3A, 3B, 3D - Wellfield protection area protection. - The proposed project is not located within a wellfield protection area.

Objective 3/Policy 3E - Limestone mining within the area bounded by the Florida Turnpike, the Miami-Dade/ Broward Levee, N.W. 12 Street and Okeechobee Road. - The proposed project is not located within this area.

Objective 4/Policies 4A, 4B, 4C - Water storage, aquifer recharge potential and maintenance of natural surface water drainage. - The proposed project is not reasonably expected to adversely affect water storage, aquifer recharge potential or natural surface water drainage.

Objective 5/Policies 5A, 5B, 5F - Flood protection and cut and fill criteria – The proposed project is not reasonably expected to compromise flood protection.

Objective 6/Policy 6A - Areas of highest suitability for mineral extraction. - The proposed project is not located in an area proposed or suitable for mineral extraction.

Objective 6/Policy 6B - Guidelines for rock quarries for the re-establishment of native flora and fauna. - The proposed project is not located in a rock quarry.

Objective 7/Policy 7A, 7C, 7D, 7J - Wetland protection and restoration. – The proposed project is not located in wetlands.

Objective 9/Policies 9A, 9B, 9C - Protection of habitat critical to Federal or State-designated threatened or endangered species. – The proposed project is not reasonably expected to adversely affect habitat critical to rare, threatened, and endangered species as set forth in Number 1 above.

COASTAL MANAGEMENT ELEMENT VII:

Objective 1/Policy 1A - Tidally connected mangroves in mangrove protection areas. – The proposed project is not located within a designated "Mangrove Protection Area".

Objective 1/ Policy 1B - Natural surface flow into and through coastal wetlands. – The proposed project is not located within coastal wetlands.

Objective 1/ Policy 1C - Elevated boardwalk access through mangroves. – The proposed project does not involve shoreline access through mangroves.

Objective 1/Policy 1D - Protection and maintenance of mangrove forests and related natural vegetational communities. - The proposed project does not involve work in mangrove forests or related natural vegetational communities.

Objective 1/Policy 1E - Mitigation for the degradation and destruction of coastal wetlands. Monitoring and maintenance of mitigation areas. – The proposed project will not result in the degradation or destruction of coastal wetlands and therefore does not involve monitoring of mitigation for impacts to coastal wetlands.

Objective 1/Policy 1G - Prohibition on dredging or filling of grass/algal flats, hard bottom or other viable benthic communities, except as provided for in Chapter 24 of the Code of Miami-Dade County, Florida. – The proposed project does not involve dredging or filling of grass/algal flats, hard bottom, or other viable benthic communities.

Objective 2/Policies 2A, 2B - Beach restoration and renourishment objectives. - The proposed project does not involve beach restoration or renourishment.

Objective 3/Policies 3E, 3F - Location of new cut and spoil areas for proper stabilization and minimization of damages. - The proposed project does not involve the development or identification of new cut or spoil areas.

Objective 4/Policy 4A, 4C, 4E, 4F – Protection of endangered or threatened animal species. - The proposed project is not reasonably expected to affect endangered or threatened animal species, as set forth in Number 1 above.

Objective 5/Policy 5B - Existing and new areas for water-dependent uses. - The proposed project is not reasonably expected to adversely affect existing water-dependent use.

Objective 5/Policy 5D - Consistency with Chapter 33D, Miami-Dade County Code (shoreline access, environmental compatibility of shoreline development) – The Shoreline Development Review Committee has evaluated the proposed project and determined that the thresholds for review under the Shoreline Ordinance do not apply and the proposed project is not subject to shoreline development review.

Objective 5/Policy 5F - The siting of water dependent facilities. - The proposed project does not involve the creation of any new water dependent facilities.

28. **Conformance with Chapter 33B, Code of Miami-Dade County** (East Everglades Zoning Overlay Ordinance) – The proposed project is not located within the East Everglades Area.

29. **Conformance with Miami-Dade County Ordinance 81-19** (Biscayne Bay Management Plan Sections 33D-1 through 33D-4 of the Code of Miami-Dade County) – The proposed project includes the non-water dependent use of a Barge that is not in full conformance with the Biscayne Bay Management Plan. However, the applicant is requesting a variance to the water dependency requirement of the Code, and the use is not reasonably expected to result in adverse environmental impacts for the reasons set forth in Number 1 above.

30. **Conformance with the Miami-Dade County Manatee Protection Plan** - The proposed project is not located within an area designated as essential manatee habitat for the West Indian Manatee by the MPP. However, the Class I permit will require that all standard construction permit conditions regarding manatees be followed during all in-water operations.

31. **Consistency with Miami-Dade County Criteria for Lake Excavation** – The proposed project does not involve lake excavation.

32. **Municipality Recommendation** – Pursuant to Section 24-48.2(II)(B)(7), Code of Miami-Dade County, Florida, a substantiating letter shall be submitted stating that the proposed project does not violate any zoning laws. Said letter will be submitted after the approval by the Board of County Commissioners and prior to the issuance of the Class I permit.

33. **Coastal Resources Management Line** - A coastal resources management line was not required for the proposed project, pursuant to Section 24-48.2(II)(B)(10)(b) of the Code of Miami-Dade County.

34. **Maximum Protection of a Wetland's Hydrological and Biological Functions** – The proposed project is not located within wetlands.

35. **Class I Permit Applications Proposing to Exceed the Boundaries Described in Section D-5.03(2)(a) of the Miami-Dade County Public Works Manual** – Not Applicable.

The proposed project was also evaluated for compliance with the standards contained in Sections 24-48.3(2),(3), and (4) of the Code of Miami-Dade County, Florida. The following is a summary of how the standards relate to the proposed project:

24-48.3 (2) Dredging and Filling for Class I Permit – Not Applicable

24-48.3 (3) Minimum Water Depth Required for Boat Slips Created by the Construction or Placement of Fixed or Floating Docks and Piers, Piles and Other Structures Requiring a Permit Under Article IV, Division 1 of Chapter 24 of the Code of Miami-Dade County – The proposed project complies with the water depth criteria.

24-48.3 (4) Clean Fill in Wetlands – Not Applicable.

The project was also evaluated based upon the applicable factors set forth in Section 24-48.25 of the Code.

36. **Visual or physical access by the general public to Biscayne Bay and its adjacent tidal waters** – The proposed project is not reasonably expected to adversely affect visual or physical access to the adjacent waters.

37. **Historical significance** – The proposed project is not historically significant.

38. **Need for covered vessel repair facilities** - Not applicable.

39. **Environmental impact or cumulative environmental impact** – The proposed project is not reasonably expected to result in adverse environmental impacts as set forth in Number 1 above.

40. **Navigation** – The proposed project is not reasonably expected to adversely affect navigation.

41. **Public safety** – The proposed project is not reasonably expected to adversely affect public safety.

42. **Aesthetics**- The proposed project is not reasonably expected to adversely affect aesthetics.

43. **Biscayne Bay Management Plan** – The project includes a non-water-dependent use that is not in full conformance with the Biscayne Bay Management Plan. However, the applicant is requesting a variance to the water dependency requirement of the Code. In addition, the proposed project is not reasonably expected to result in adverse environmental impacts as set forth in Number 1 above.

44. **Biscayne Bay Aquatic Preserve Act** - The project is not in full conformance with the Biscayne Bay Aquatic Preserve Act. However, the applicant is requesting a variance as set forth in Number 43 above.

45. **Rules of the Biscayne Bay Aquatic Preserve** - The project is not in full conformance with the rules of the Biscayne Bay Aquatic Preserve. However, the applicant is requesting a variance as set forth in Number 43 above.

BASED ON THE FOREGOING, IT IS RECOMMENDED THAT A CLASS I PERMIT BE APPROVED.

Lisa Spadafina, Chief
Natural Resources Division

Christine Hopps, ERPS
Coastal and Wetlands Resources Section