Bicycle Facilities Plan

2001

Gannett Fleming
In coordination with
Civil Works, Inc.

Alexander Penelas
Mayor

Governing Board
Gwen Margolis
Chairperson

Miriam Alonso
Bruno Barreiro
Barbara M. Carey
Joe J. Celestin
Betty T. Ferguson
Perla Tabares Hantman
William H. Kerdyk
Ronald Krongold
Joe A. Martinez
Raul Martinez
Jimmy Morales
Dennis C. Moss
Dorrin D. Rolle
Natacha Seijas
Darryl K. Sharpton
Jose Smith
Katy Sorenson
Rebeca Sosa
Javier Souto
Arthur E. Teele, Jr.

Non-Voting Membership
Florida Department of Transportation
Jose Abreu Gary Donn

Steve Shiver
County Manager

Jose-Luis Mesa
MPO Director

Acknowledgements

The Miami-Dade Metropolitan Planning Organization (MPO) would like to thank the following committees for their input and assistance in developing the Miami-Dade County Bicycle Facilities Plan.

Bicycle/Pedestrian Advisory Committee

David Kaufman Chairman	Edgardo Guerrero	Larry Shahboz
Brett Bibeau	Brian Hannigan	Ted Silver
Dr. Barry Burak	Bruce Henderson	Brian Singer
Mike Fleming	Lillian Ros Martin	Leo Succar

Long Range Transportation Plan Steering Committee

Ossama Al-Aschkar Broward County MPO	Rafael DeArazoza Florida Department of Transportation	Michael Moore MPO Secretariat
Frank Baron MPO Secretariat	Alberto Dominguez City of Miami	Carlos Roa MPO Secretariat
Giovanni Batista City of North Miami	Anita Fain-Holloway City of North Miami	Lisa Ross-McMillion Miami-Dade Transit
Frank Baumann Miami-Dade County Department of Planning and Zoning	Wilson Fernandez MPO Secretariat	Jose-Luis Posada Miami-Dade County Seaport
Charles Blowers Miami-Dade County Department of Planning and Zoning	Carl Filer Florida Department of Transportation	Rene Rodriguez Florida Department of Transportation
Helen Brown Miami-Dade County Department of Planning and Zoning	Randy Fox Florida Department of Transportation	Kim Samson Florida Department of Transportation
Ping Chang South Florida Regional Planning Council	Mario Garcia Miami-Dade Transit	Jesus Sanchez Miami-Dade Expressway Authority
Bob Cincotta Miami-Dade County Public Works Department	David Henderson MPO Secretariat	Phil Steinmiller Florida Department of Transportation
Jeff Cohen Miami-Dade County Public Works Department	Henry Johnson City of Miami Beach	Clark Turner City of Miami
Enrique Cuellar Miami-Dade County Department of Environmental Resource Management	Joseph Johnson City of Miami Beach	Mark Woerner Miami-Dade County Department of Planning and Zoning
	David Korros Florida Department of Transportation	

Table of Contents

Executive Summary ..... **i**

Definitions ..... **v**

Introduction **1**

Purpose ***1***
Background ***1***
Previous Efforts 1
MPO/Committee Role 2

Existing Conditions **2**

2000 Bicycle Roadway Network ***3***
Bicycle Off-Road Network ***3***
Bicycle Level of Service (BLOS) ***3***
Current Conditions/BLOS Ratings 5
Latent Demand Score (LDS) ***7***
LDS Methodology 7
LDS Ratings 8

Project Evaluation Methodology **10**

Evaluation Criteria ***10***
Weighting of Evaluation Criteria ***13***
Composite Evaluation Scores ***13***

Identification of Candidate Projects **15**

Identification of Candidate Bicycle Projects ***15***
Off-Road Bicycle Facilities Candidate Projects ***17***
Feasibility Analysis ***17***

Development of Minimum Revenue Plan **17**

Funding Levels ***17***
Minimum Revenue Projects ***18***

Implementation **22**

Recognition of Adopted Plans ***22***
Successful Implementation of Adopted Plans ***23***

List of Tables

Table 1. Bicycle Level of Service.....5
Table 2. Bicycle Level of Service Segment Summary.....7
Table 3. Bicycle Latent Demand Score Segment Summary.....10
Table 4. Bicycle Evaluation Criteria 11
Table 5. Weight Assigned to Bicycle Project Evaluation Criteria 13
Table 6. Composite Bicycle Evaluation Score Summary 13
Table 7. Minimum Revenue Plan 18

List of Figures

Figure 1. 2000 Bicycle Network 4
Figure 2. 2001 Bicycle Level of Service.....6
Figure 3. Bicycle Latent Demand Scores 9
Figure 4. 2001 Bicycle Evaluation Scores 14
Figure 5. 2001 Bicycle Candidate Projects 16
Figure 6. 2001 Bicycle Minimum Revenue Plan 21

List of Appendices

Appendix A Unfunded Projects
Appendix B Technical Appendix

Executive Summary

Introduction

Increasing number of Miami-Dade County residents and visitors are choosing to walk or bike for all or a portion of their trip. To meet the needs of these travelers, the Miami-Dade Metropolitan Planning Organization (MDMPO) has addressed walking and bicycling in its transportation plan. The creation of a Bicycle Plan is a step towards not only enhancing the County's bicycling facilities but also achieving a higher percentage of non-motorized trips by identifying areas in greatest need of bicycle improvements and focusing improvements to those areas.

The purpose of the 2025 Bicycle Plan is to:

- Update the 1997 Bicycle Plan;
- Identify bicycle facility needs based on quantitative analysis;
- Identify candidate project to address the bicycle facility needs;
- Prioritize bicycle facility projects; and
- Develop a Minimum Revenue Plan based on projected funding.

The Miami-Dade MPO prepared a Bicycle Facilities Plan in 1997. The 1997 Bicycle Plan examined existing roadway conditions relating to bicycle travel and identified a set of improvements to both on- and off- road facilities for incorporation into the Miami-Dade MPO's Transportation Improvement Plan (TIP). The 1997 Bicycle Plan identified proposed long-range and short-range facilities but did not rank projects in order of priority. Available funding was not identified and a minimum revenue plan was not developed.

The 2025 Bicycle Plan builds on the 1997 Bicycle Plan utilizing a series of new quantitative tools to objectively evaluate the transportation network. Bicycle projects were ranked creating a priority listing of roadways for improvements and associated funding sources were identified.

2000 Bicycle On- and Off- Road Network

The 2000 Bicycle Road Network is based on the road network developed for the 2025 Long Range Transportation Plan plus certain additional roads included in the 1997 Bicycle Plan. It consists of over 1,500 centerline miles of roadway that are divided into nearly 3,500 segments for final analysis. Segmentation of the 2025 Bicycle Road Network recognizes changes in the bicycling environment. Road segments in the 2000 Bicycle Road Network may be combined to create segments that are consistent with the 2025 LRTP road network.

Off-road bicycle facilities in Miami-Dade County are identified as greenways. Greenway projects have not been included in previous LRTP updates. In some instances, a small portion of a Greenway may be adjacent to vehicular traffic.

Bicycle Level of Service (BLOS)

The determination of the bicycle level of service for each segment of the Miami-Dade Network is based on the operational level of service methodology adopted by the Florida Department of Transportation (FDOT). The Bicycle Level of Service (BLOS) Model identifies the bicycle level of service for a segment of the Bicycle Network on a scale of A to F based on a numerical model evaluating a facility's given conditions. An LOS of "A" indicates good cycling conditions and "F" indicates the least favorable conditions. BLOS is a measure of the quality of the bicycle environment based on measured physical attributes including the vehicle volume and speed on the adjacent roadway, the presence or absence of a striped bike lane, and the presence or absence of occupied on-street parking.

Of the over 1,500 miles analyzed, only 8.6 percent of roadway miles received an acceptable level of service score of "C" or better. Over 90 percent of the roadway miles received an unacceptable LOS score of "D" or worse, with approximately 58 percent of all segments receiving an LOS score of "E" and 5.7 percent an LOS of "F". Within the defined bicycle network, the County currently has less than 12 miles of on-road bicycle lanes meeting the FDOT criteria for a bicycle lane.

Latent Demand Score (LDS)

While sophisticated models have been developed to predict auto and transit travel, until recently there were no models for predicting bicycling and walking trips. Over the last several years, many new methods have been created for estimating walking and cycling trips, however, most of the models are relatively new and unproven. One of method, the latent demand score (LDS), has been applied in several metropolitan areas across the U.S. and is gaining in acceptance. The latent demand score provides an indication of the potential for bicycling trips, regardless of the status or condition of the bicycle facilities along the roadway segment. The LDS provides an indication of the potential demand for bicycle facilities along a particular roadway corridor assuming adequate and safe bicycle facilities were available. The latent demand analysis is not applicable to off-road facilities.

The LDS for the 3,464 segments evaluated were divided into 5 equal groups, ranging from Low to High. A higher latent demand score indicates a higher potential demand for bicycle trips. Latent demand is highest for segments that serve or are located adjacent to multiple bicycle trip generators. The highest bicycle trip generator is a park followed by schools, particularly elementary schools. In addition to a segment's proximity to high trip generators such as parks and schools, segments that received high latent demand scores are located in areas of high population and employment densities.

Project Evaluation Methodology

The failure of the BLOS analysis to sufficiently stratify the segments based on the quality of service experienced by the cyclist (because the majority of the segments were poor or very poor) resulted in the development of five additional evaluation criteria for application to the 2000 Bicycle Roadway Network to produce the Minimum Revenue Plan. The five evaluation additional criteria used were:

- Congestion Reduction
- Connectivity/Network Enhancement
- Support of LRTP Goals and Objectives
- Safety
- School Access

The Miami-Dade MPO Bicycle and Pedestrian Advisory Committee (BPAC) ranked the evaluation criteria in order of importance relative to bicycle improvements. The BPAC identified safety as the most important factor in the evaluation of bicycle facilities followed by connectivity and BLOS. The 2025 Long Range Transportation Steering Committee assigned each criterion a specific numerical weight based on the magnitude of importance assigned by the BPAC. Weights assigned to each criterion by individual steering committee members were averaged to produce the weight assigned to each evaluation criteria in the analysis.

The Composite Evaluation Score for each segment was calculated by multiplying the segment's score for each criterion by the weight assigned that criterion and summing the resulting weighted scores. The composite score reflects a segment's relative need (priority) for bicycle improvements. Scores ranged from a low of 0.26 to a high of 4.63 for bicycle facilities.

Candidate projects were created by assembling adjacent segments with a composite evaluation score of 3 or higher into project corridors. Project Corridors are at least 2 miles in length or connect to an existing bicycle facility, extending the existing facility. The need to assemble the individual segments of the roadway network into longer, project corridors is apparent, given the fragmented evaluation network and the following considerations:

- The national average length of a bicycle work trip is 2.1 miles and over 1 mile for shopping and school trips.
- The BLOS analysis highlights the fact that the bicycle environment in Miami-Dade County is generally deficient, with a BLOS of D or lower for more than 90 percent of the segments evaluated. Improvements to an individual segment would not contribute to mobility unless adjacent deficient segments are also improved.

The quantitative process for identifying Candidate Projects was presented to the BPAC at its regular meeting on June 28, 2001. Public participation at the meeting was good, with 23 people participating in the meeting. Meeting attendees were asked to review the list of Candidate Projects. Each small group was asked review the limits of the segments that had been identified through the initial analysis and comment on the need to expand or reduce the project length based on local knowledge. Each group was also asked to add corridors/projects to the list based on local cycling needs that may not have been captured in the technical analysis. No Candidate Project limits were expanded, however many corridors/projects were added.

All Candidate Projects (Corridors) were analyzed for feasibility to construct/enhance on-road bicycle facilities within the existing right-of-way. Of the 72 corridors evaluated for right-of-way constraints, 25 corridors were identified for improvements and included in the Minimum Revenue Plan.

Funding Strategies

Funding sources identified as contributing to funding for projects included in the 2025 Bicycle Plan are Surface Transportation Program (STP) funds, Transportation Enhancement funds, and Congestion Mitigation and Air Quality Improvement Program (CMAQ) funds. Previous Long Range Transportation Updates have identified that a funding level of 1.5 percent of STP and CMAQ funds be available to fund bicycle and pedestrian improvements. Maintaining this funding level of 1.5 percent and recognizing the historical allocation of Enhancement funds for bicycle/pedestrian facilities of 80 percent, a total 2006-2025 funding level of $62.15 million is anticipated for bicycle and pedestrian facilities. These funds are sub-allocated as a percent of the total bicycle/pedestrian funds for this period by the following facility types:

- Bicycle On-road Projects
- Pedestrian On-road Projects
- Off-road Projects (Greenways).

Nearly $28 million, or 45 percent of the funds available for the above facility types were allocated to on-road bicycle facilities.

Minimum Revenue Plan

The BPAC ranked the final On-Road Bicycle Candidate Projects based on average weighted evaluation scores for the corridors and local knowledge. Available funding assigned to bicycle facilities was applied to develop a 2025 Minimum Revenue Plan that is divided into four priority categories.

Definitions

Bicycle Level of Service (BLOS) – Quantitative method of evaluation the bicycling conditions of shared roadway environments. Factors include roadway with, bike lane widths and striping combination, traffic volume, pavement surface conditions, motor vehicles' speed and type and on-street parking.

Bicycle/Pedestrian Advisory Committee (BPAC) - Committee comprised of private citizens appointed by the MPO Governing Board to provide recommendations on bicycle and pedestrian related issues. The BPAC is charged with identifying opportunities for the use of bicycling, walking and running as safe methods of transportation and recreation in Miami-Dade County. BPAC members are appointed by the MPO Governing Board.

Candidate Projects – Bicycle improvement projects to be considered for implementation with the plan horizon without consideration of cost.

Greenways – Off-road, paved or unpaved, bicycle facilities that are physically separated from vehicle traffic and are generally two-way.

Latent Demand – Quantitative method to identify the potential demand for bicycle use along a given roadway segment. Analysis is based on the identification of potential bicycle trips associated with bicycle trip generators and attractors without regard to bicycle level of service.

Long Range Transportation Plan Steering Committee - Committee responsible for coordinating, compiling and preparing the Long Range Transportation Plan, as well as updates to the plan. A staff member from the MPO is assigned as project manager and develops these documents in conjunction with representatives from Federal, State and Local agencies, as well as the municipalities. The committee is composed of representatives of the entities that have Transportation Planning Council (TPC) voting members and are appointed by the Director of each department represented at the TPC. Representatives from the South Florida Regional Planning Council (SFRPC), the Broward MPO and the Citizen's Transportation Advisory Committee (CTAC) are invited to participate as non-voting members.

Miami-Dade Metropolitan Planning Organization (MPO) – Board responsible for the planning of Miami-Dade County's transportation system. The MPO Governing Board is comprised of the Miami-Dade Board of County Commissioners; a representative from the Dade League of Cities; the Miami-Dade Expressway Authority (MDX); the Miami-Dade School Board; an elected official representing municipalities with a population of over 50,000; and one at-large member. In addition, the Florida Department of Transportation (FDOT) has two non-voting members on the MPO Governing Board. MPOs are required by both federal and state laws.

Minimum Revenue Plan – Projects identified for implementation within the plan horizon. Projects are those identified in the Candidate Project list which have been prioritized and matched with eligible funding.

On-Road Bicycle Facilities - Facilities that share the roadway with vehicular traffic. Available road space designated for preferential use by bicyclists is delineated by painted lane markings. Bike lanes are generally established on urban arterials and collector streets and are one-way facilities.

Transportation Improvement Plan (TIP) – Plan required by Federal regulation identifying a minimum three-year priority list of federally funded transportation projects. In Miami-Dade County the TIP includes 5-year priority list of federally funded projects and all other transportation projects funded with state and/or local monies. The TIP must be consistent with the Metropolitan Transportation Plan and meet clean air standards. In order for transportation projects to receive federal funds they must be included in the TIP. This document has to be prepared in cooperation with State and public transit operators. The TIP has to be approved by the MPO and the Governor and becomes part of the State Transportation Improvement Program (STIP).

Introduction

Purpose

As a community's population density increases, the number of short trips (those of less than ½ mile) increases. These trips can often times be made as easily by walking or bicycling as by driving. As a community becomes more dense, the construction of bicycle and pedestrian facilities as an alternative to automobile travel becomes more important to maintain mobility within the community. The population of Miami-Dade County is expected to exceed 3 million by the year 2025. To meet the transportation needs of individuals who walk or bike for all or a portion of their trip, the Miami-Dade Metropolitan Planning Organization (MPO) is planning for these types of facilities in its transportation plan.

It is a stated intention of federal transportation policy to increase non-motorized trips to at least 15 percent of all trips and to reduce the number of non-motorized users killed in traffic crashes by at least 10 percent. In Florida, concurrency requirements were revised in 1999 to encourage a more comprehensive multi-modal evaluation of transportation facilities. Local governments are directed to use professionally accepted techniques for measuring level of service for all modes: automobile, bicycle, pedestrian, transit and trucks. The creation of a Bicycle Plan is a step towards achieving a higher percentage of non-motorized trips by identifying areas in greatest need of bicycle improvements and focusing improvements where they are most needed.

The purpose of the 2025 Bicycle Plan is to:

- Update the 1997 Bicycle Plan;
- Identify bicycle facility needs based on quantitative analysis;
- Identify candidate project to address the bicycle facility needs;
- Prioritize bicycle facility projects; and
- Develop a Minimum Revenue Plan based on projected funding.

Background

Previous Efforts

The Miami-Dade MPO prepared a Bicycle Facilities Plan in 1997. The 1997 Bicycle Plan examined existing roadway conditions relating to bicycle travel and identified a set of improvements to both on- and off- road facilities for incorporation into the Miami-Dade MPO's Transportation Improvement Plan (TIP). The 1997 Bicycle Plan identified proposed long-range and short-range facilities but did not rank projects in order of priority. Available funding was not identified and a minimum revenue plan was not developed.

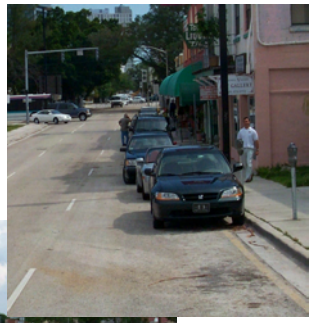

The 1997 Bicycle Plan evaluated the bicycle network using the Roadway Condition Index (RCI). Criteria included:

- Average Annual Daily Traffic
- Number of Travel Lanes
- Speed Limit
- Width of Outside Lane

Based on the evaluation, nearly 60% of the analyzed links were considered difficult, inadequate or hazardous for bicycle usage. To improve the overall inadequate system, the 1997 Plan identified possible origin and destination areas to design a grid system of improvements, composed of both on- and off- road facilities. The improvements were evaluated further based on their ability to connect existing facilities, proximity to high-hazard roads near major generators, and opportunities for recreational/greenway paths. The 1997 future bicycle network was created by identifying existing bicycle facilities, school/employment centers and off-road facility opportunities on a map. The mapping effort resulted in the creation of a comprehensive network of potential corridors for both on- and off- road facilities.

The 2025 Bicycle Plan builds on the 1997 Bicycle Plan utilizing a series of new quantitative tools to objectively evaluate the transportation network. Bicycle projects were ranked creating a priority listing of roadways for improvements and associated funding sources were identified.

MPO/Committee Role

The MDMPO utilized its 2025 LRTP Steering Committee and Bicycle/Pedestrian Advisory Committee (BPAC) to guide development of the 2025 Bicycle Facilities Plan by:

- establishing the bicycle facilities project evaluation criteria,
- weighting the project evaluation criteria,
- reviewing the needs assessment,
- developing the list of Candidate Projects and
- recommending a Minimum Revenue Plan.

The recommendations of the BPAC were forwarded to the LRTP Steering Committee for final review. The recommendations of the LRTP Steering Committee serve as the basis for the 2025 Bicycle Facilities Plan. The Minimum Revenue Plans for on-road and off-road facilities recommended by the 2025 LRTP Steering Committee and BPAC were adopted by the Miami-Dade County Metropolitan Planning Organization for inclusion in its 2025 Long Range Transportation Plan on December 6, 2001.

Existing Conditions

The existing conditions analysis for on-road and off-road bicycle facilities includes the development of the 2000 Bicycle Road Network and Off-Road Network and the assessment of the existing level of service and latent demand for all facilities on the networks.

2000 Bicycle Roadway Network

The 2000 Bicycle Road Network is based on the road network developed for the 2025 Long Range Transportation Plan plus additional roads included in the 1997 Bicycle Plan. Freeways and toll roads are not included in the inventory. The 2000 Bicycle Network is depicted in **Figure 1**. It consists of over 1,500 centerline miles of roadway divided into nearly 3,500 segments for analysis. Segmentation of the 2025 Bicycle Road Network recognizes changes in the bicycling environment. Road segments in the 2000 Bicycle Road Network may be combined to create segments that are consistent with the 2025 LRTP road network.

Bicycle Off-Road Network

Off-road bicycle facilities in Miami-Dade County are identified as greenways. Greenway projects have not been included in previous LRTP updates. In some instances, a small portion of a Greenway may be adjacent to vehicular traffic. In general, Greenways are two-way facilities except for those portions of the greenway that are located adjacent to vehicular traffic.

Bicycle Level of Service (BLOS)

The determination of the bicycle level of service for each segment of the 2000 Bicycle Road Network is based on the operational level of service methodology adopted by the Florida Department of Transportation (FDOT). The Bicycle Level of Service (BLOS) Model identifies the bicycle level of service for a segment of the Bicycle Network on a scale of A to F based on a numerical model score as shown in **Table 1. *Bicycle Level of Service***. An LOS of "A" indicates good cycling conditions and "F" indicates the least favorable conditions. BLOS is a measure of the quality of the bicycle environment based on measured physical attributes including the vehicle volume and speed on the adjacent roadway, the presence or absence of a striped bike lane, and the presence or absence of occupied on-street parking.

Resulting level of service values from the BLOS model are not equivalent to the corresponding level of service for motorized vehicles that has been long recognized by engineers and planners in Florida. BLOS is a measure of compatibility for bicycle travel on a given roadway network and not a measure of capacity. The BLOS level of service is not a function of congestion on the network facility but rather the quality of service experienced by the cyclist along a given segment. For this study, an BLOS of D is a failing score.

Figure 1: 2001 Bicycle Network

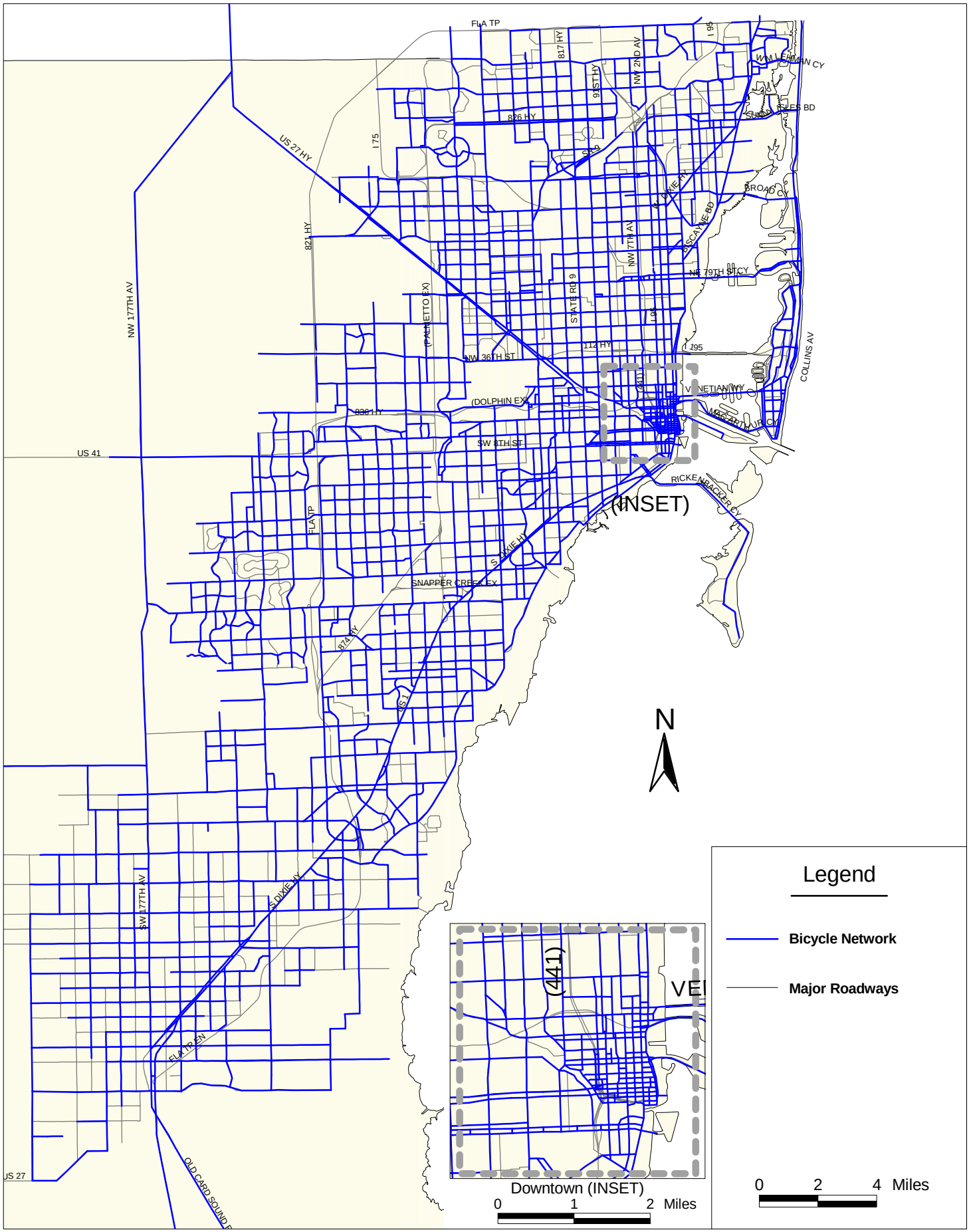

Table 1. Bicycle Level of Service

Level of Service	Model Score
A	≤ 1.5
B	>1.5 and ≤ 2.5
C	> 2.5 and ≤ 3.5
D	> 3.5 and ≤ 4.5
E	>4.5 and ≤ 5.5
F	> 5.5

The BLOS Model recognizes key factors that affect bicycle LOS:

- Presence of a bike lane or paved shoulder;
- Proximity of the bicyclist to the vehicular traffic;
- Characteristics of the vehicular traffic; and
- Pavement condition.

The most important variables are the average effective width of the outside through lane and the volume of motorized vehicles. The average effective width considers the width of the outside travel lane and the striped area for bicyclists, if present.

Current Conditions/BLOS Ratings

Each segment in the 2000 Bicycle Road Network was analyzed using the BLOS methodology. A field inventory of each segment was performed in April 2001. The results of the BLOS Current Conditions analysis are presented on **Figure 2**.

Of the over 1,500 miles analyzed, only 8.6 percent received an acceptable level of service score of "C" or better. Over 90 percent of the roadway miles received an unacceptable LOS score of "D" or worse, with approximately 58 percent of all segments receiving an LOS score of "E" and 5.7 percent an LOS of "F". **Table 2. *Bicycle Level of Service Segment Summary*** indicates the breakdown of the level of service for the 2000 Bicycle Roadway Network by segment and miles.

Within the defined bicycle network, the County currently has less than 12 miles of on-road bicycle lanes meeting the FDOT criteria for a bicycle lane:

- Minimum of 5 feet paved shoulder in rural areas or
- Minimum of 4 feet of additional pavement between the outside travel land and the curb and gutter in urban areas.

Figure 2: 2001 Bicycle Level of Service

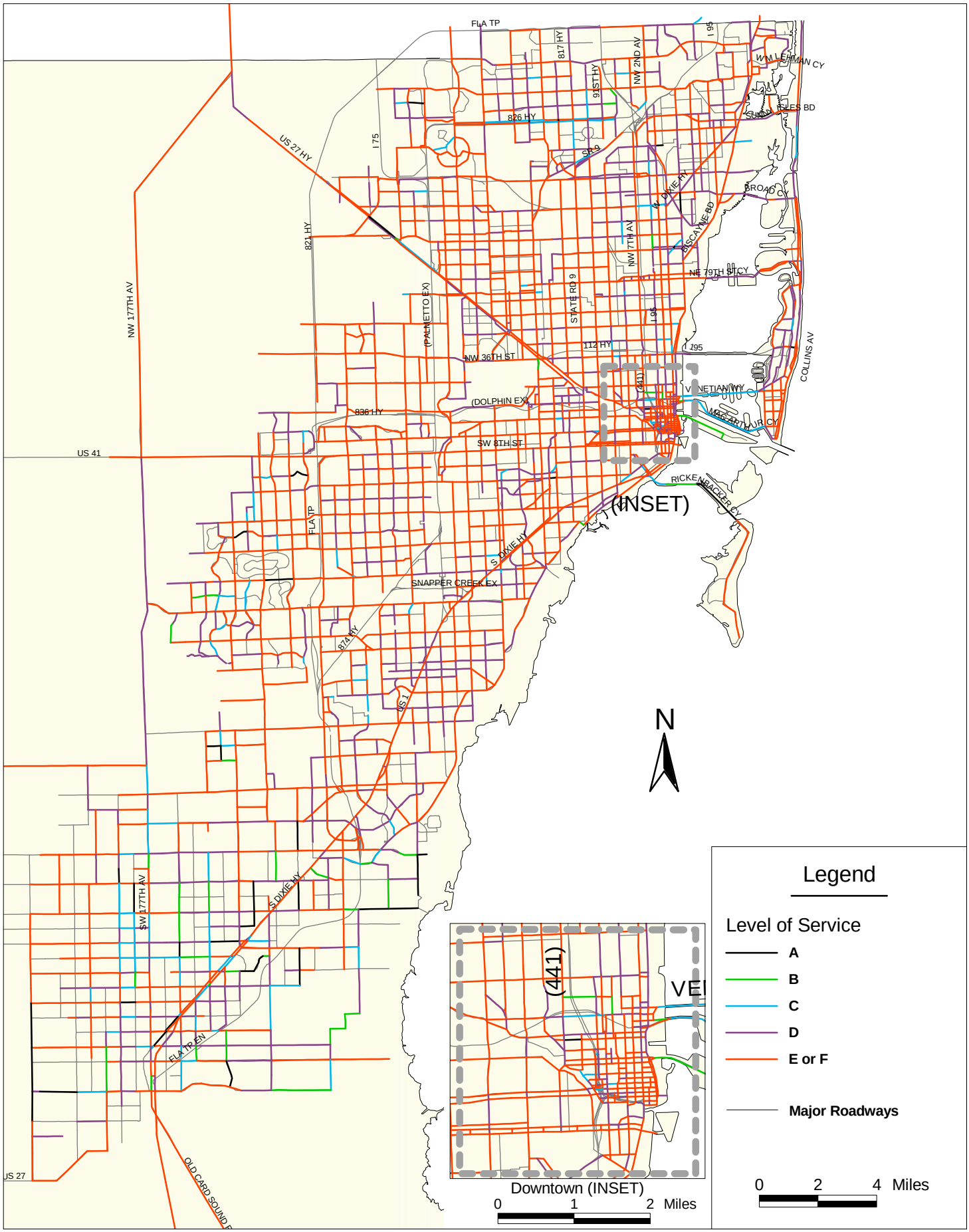

Table 2. Bicycle Level of Service Segment Summary

LOS	Segment		Length	
	Number	Percentage	Miles	Percentage
A	44	1.3%	30.59	2.0%
B	43	1.2%	25.91	1.7%
C	157	4.5%	75.14	4.9%
D	985	28.5%	416.84	27.3%
E	2,077	60.2%	890.46	58.3%
F	146	4.2%	87.30	5.7%

Latent Demand Score (LDS)

There are volumes of data available regarding vehicular traffic: the number of vehicles that travel on a given roadway; turning movements at intersections; accidents; and how much traffic is generated by a given land use in different areas (urban vs. rural). Information on bicycle traffic is not as readily available. There is limited information regarding current bicycle usage in a given area and even less information regarding how many bicycle trips are generated by a given land use.

While sophisticated models have been developed to predict auto and transit travel, until recently there were no models for predicting bicycling and walking trips. Over the last several years, many new methods have been created for estimating walking and cycling trips, however, most of the models are relatively new and unproven. In 1999, FHWA completed a study on these methods, entitled "Guidebook on Methods to Estimate Non-Motorized Travel". Although this study documented the different methods, it did not recommend or develop a standardized method.

One of the methods described in the FHWA Guidebook is called the latent demand score (LDS). LDS has been applied in several metropolitan areas across the U.S. and is gaining in acceptance. The latent demand score provides an indication of the potential for bicycling trips, regardless of the status or condition of the bicycle facilities along the roadway segment. The LDS provides an indication of the potential demand for bicycle facilities along a particular roadway corridor as if adequate, safe bicycle facilities were available. The latent demand analysis is not applicable to off-road facilities.

<u>LDS Methodology</u>

The LDS methodology selected for use in developing the 2025 Bicycle Plan for Miami-Dade County quantifies the potential demand for bicycle travel on public facilities using a methodology similar to the approach used for predicting vehicle trips (gravity model). The following steps are involved in conducting a latent demand analysis:

1) Identify the trip attractors (e.g., homes, etc.) and generators (e.g., employment, parks, schools, etc.) along a corridor segment.
2) Geocode the attractors and generators along the corridor and determine the number of attractors/generators within probable travel distances.
3) Determine the trip generation of the attractors/generators based on standard trip generation rates and adjust the trip generation for bicycle and pedestrian travel based on local Census data.
4) Compute the trip making probability summations, which includes multiplying the trip generation figures by trip distance impedance factors.

Potential bicycle trips in Miami-Dade County were calculated based on four trip types:

- Work Trips, including universities;
- Shopping Trips;
- School Trips; and
- Recreation/Social Trips, including Parks and Trail Heads.

Factors other than travel demand such as land use density, trip distance and availability of bicycle facilities, have a greater effect on bicycle usage than they do on automobile travel. Latent bicycle trip activity is directly related to the frequency, magnitude and proximity of trip generators and attractors to a roadway segment.

The Latent Demand Score for non-linked trips on a roadway segment is the sum of the individual trip purposes multiplied by their associated trip share as defined in the National Personal Transportation Survey.

LDS Ratings

All of the segments in the 2000 Bicycle Roadway Network were rated using the latent demand methodology described above. The LDS for the 3,464 segments evaluated were divided into 5 equal groups, ranging from Low to High. The results of the analysis are depicted on **Figure 3** and in **Table 3**. ***Bicycle Latent Demand Score Segment Summary***. A higher latent demand score indicates a higher potential demand for bicycle trips.

Latent demand is highest for segments that serve or are located adjacent to multiple bicycle trip generators. The highest bicycle trip generator is a park followed by schools, particularly elementary schools. In addition to a segment's proximity to high trip generators such as parks and schools, segments that received high latent demand scores are located in areas of high population and employment densities. Less urban areas have lower population and employment densities and fewer activity generators.

Figure 3: 2001 Bicycle Latent Demand Scores

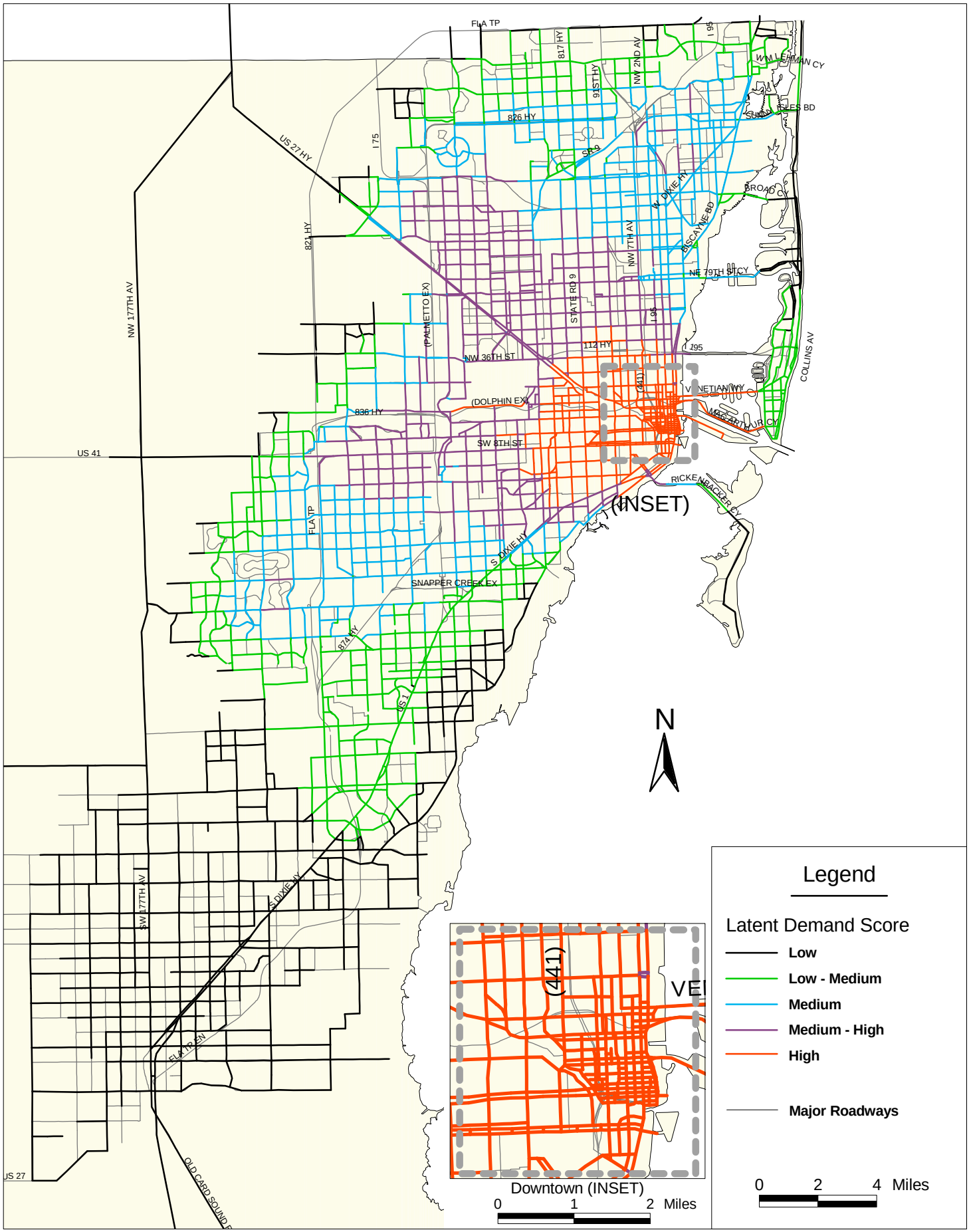

Table 3. Bicycle Latent Demand Score Segment Summary

	Segments		Length	
LDS	**Number**	**Percentage**	**Miles**	**Percentage**
Low	695	20.1%	470.73	30.7%
Low-Medium	693	20.0%	326.08	21.3%
Medium	690	19.9%	280.31	18.3%
Medium-High	691	19.9%	215.13	14.0%
High	695	20.1%	240.22	15.7%

Project Evaluation Methodology

The development of project evaluation criteria was influenced by the results of the BLOS evaluation of existing conditions. As indicated previously, over 90 percent of the number of segments and overall length of the 2000 Bicycle Roadway Network operates at an LOS of D or below. The failure of the BLOS analysis to sufficiently stratify the segments based on the quality of service experienced by the cyclist (because the majority of the segments were poor or very poor) resulted in the development of five additional evaluation criteria for application to the 2000 Bicycle Roadway Network to produce the Minimum Revenue Plan.

Evaluation Criteria

In addition to BLOS and LDS, five evaluation criteria were established for use in developing the 2025 Bicycle Candidate Projects. The evaluation criteria were applied to each segment in the 2000 Bicycle Roadway Network to quantitatively identify relative priority for improvement. The five evaluation additional criteria used were:

- Congestion Reduction
- Connectivity/Network Enhancement
- Support of LRTP Goals and Objectives
- Safety
- School Access

A description and scoring method for each evaluation criteria is summarized in **Table 4. *Bicycle Evaluation Criteria.***

Table 4. Bicycle Evaluation Criteria

CRITERIA	DESCRIPTION	SCORING METHOD
Bicycle Level of Service (BLOS)	Decision-making tool for the prioritization of bicycle-related projects. Key factors and inputs affecting this safety-related variable include the presence of bicycle lanes, volume/speed of motorized traffic, pavement condition, on-street parking, roadway width and others.	BLOS score of F (very bad) = 5 points BLOS score of E (very poor) = 4 points BLOS score of D (poor) = 3 points BLOS score of C (fair) = 2 points BLOS score of B (good) or A (very good) = 1 point
Latent Demand Score	Indicator of potential bicycle demand by segment based on generators of bicycle trips.	LDS Score of High = 5 points LDS Score of Medium-High = 4 points LDS Score of Medium = 3 points LDS Score of Low-Medium = 2 points LDS Score of Low = 1 point
Congestion Reduction	Recognizes the vehicular congestion of the adjacent roadway and associates the construction of a bicycle facility with reduction in vehicular congestion (an alternative mode). Congestion scores are based on 1999 volume to capacity (V/C) ratios of the highway network from the 2025 Long Range Transportation Model. Roadway segments with a high level of congestion are assigned a high score under this criterion.	V/C is > 1 = 5 points V/C between 0.75 and 1 = 3 points V/C is < 0.75 = 1 point
Connectivity/ Network Enhancement	Measures a roadway segment's proximity to bicycle generators. Segments are assigned a point for each of the following generators/attractors: ▪ transit routes that serve the segment; ▪ trailheads that lie within a ¼ mile of the segment; ▪ schools that lie within 1/4 mile of the segment (including technical, charter and private schools); and ▪ intermodal facilities that lie within 1/4 mile of the segment (TriRail, MetroRail and MetroMover stops).	Score between 6 and 21 = 5 points Score between 4 and 5 = 4 points Score of 3 = 3 points Score of 2 = 2 points Score of 1 = 1 point

Table 4. Bicycle Evaluation Criteria

CRITERIA	DESCRIPTION	SCORING METHOD
Supports Adopted Long Range Transportation Plan	Recognizes the leveraging effect available to projects that are identified for capacity improvement in the 1999-2005 TIP and 2020 LRTP Plan. Segments identified for improvement in the TIP and LRTP provide a greater opportunity for increased bicycle improvements.	Segment appears in the TIP = 5 points Segment appears in the second five year period of the LRTP = 4 points Segment appears in the third five year period of the LRTP = 3 points Segment appears in the last five year period of the LRTP = 2 points Segment does not appear in the LRTP = 0 points
Safety	In the absence of accident data (a direct indicator of safety) measures safety based on LOS and LDS. Segments that have high bicycle demand (high LDS scores) but poor bicycle facilities (low LOS scores) are considered to be a greater safety hazards that roads with low demand and high level of service. Segments with an LOS of E or lower and an LDS of High or Medium-High are assumed to have the greatest potential for bicycle accidents.	LOS equals F and LDS equals High or Medium-High = 5 points LOS equals E and LDS equals High = 3 points LOS equals E and LDS equals Medium-High = 1 point
School Access	Measures the proximity of a roadway segment to public and private elementary, middle, senior high and charter or technical schools. Segments are assigned points based on its LOS and the number of schools that are within a one or two mile buffer.	Safety score between 191 to 742 = 5 points Safety score between 142 to 190 = 4 points Safety score between 102 to 141 = 3 points Safety score between 62 to101 = 2 points Safety score between 1 to 61 = 1 point

Weighting of Evaluation Criteria

The BPAC ranked the evaluation criteria in order of importance to the need for bicycle improvements. The BPAC identified safety as the most important factor in the evaluation of bicycle facilities followed by school access, PLOS and connectivity. The 2025 Long Range Transportation Steering Committee assigned each criterion a specific weight based on the ranked assigned by the BPAC. Weights assigned to each criterion by individual steering committee members were averaged to produce the weights the evaluation criteria. The results are summarized in **Table 5.** ***Weight Assigned to Bicycle Project Evaluation Criteria***.

Table 5. Weight Assigned to Bicycle Project Evaluation Criteria

Criteria	Weight
Safety	30.00%
Connectivity	18.34%
BLOS	17.50%
School Access	15.00%
LRTP Support	10.83%
LDS	6.33%
Congestion	2.00%

Composite Evaluation Scores

The Composite Evaluation Score for each segment was calculated by multiplying the segment's score for each of the seven criteria by the weight assigned that criterion and summing the resulting scores. The composite score reflects a segment's relative need (priority) for bicycle improvements. Scores ranged from a low of 0.26 to a high of 4.63 for bicycle facilities. The number and percentage of segments and centerline miles within each Evaluation Score (1 to 5) is provided in **Table 6.** ***Composite Bicycle Evaluation Score Summary*** and depicted on **Figure 4.**

Table 6. Composite Bicycle Evaluation Score Summary

Score	Segments		Length	
	Number	Percentage	Miles	Percentage
0.0000 – 0.9999	153	4.5%	124.27	8.1%
1.0000 – 1.9999	1,418	41.2%	715.06	46.8%
2.0000 – 2.9999	1,286	37.4%	525.06	34.4%
3.0000 – 3.9999	543	15.8%	147.45	9.7%
4.0000 – 5.0000	38	1.1%	15.80	1.0%

Figure 4: 2001 Bicycle Evaluation Scores

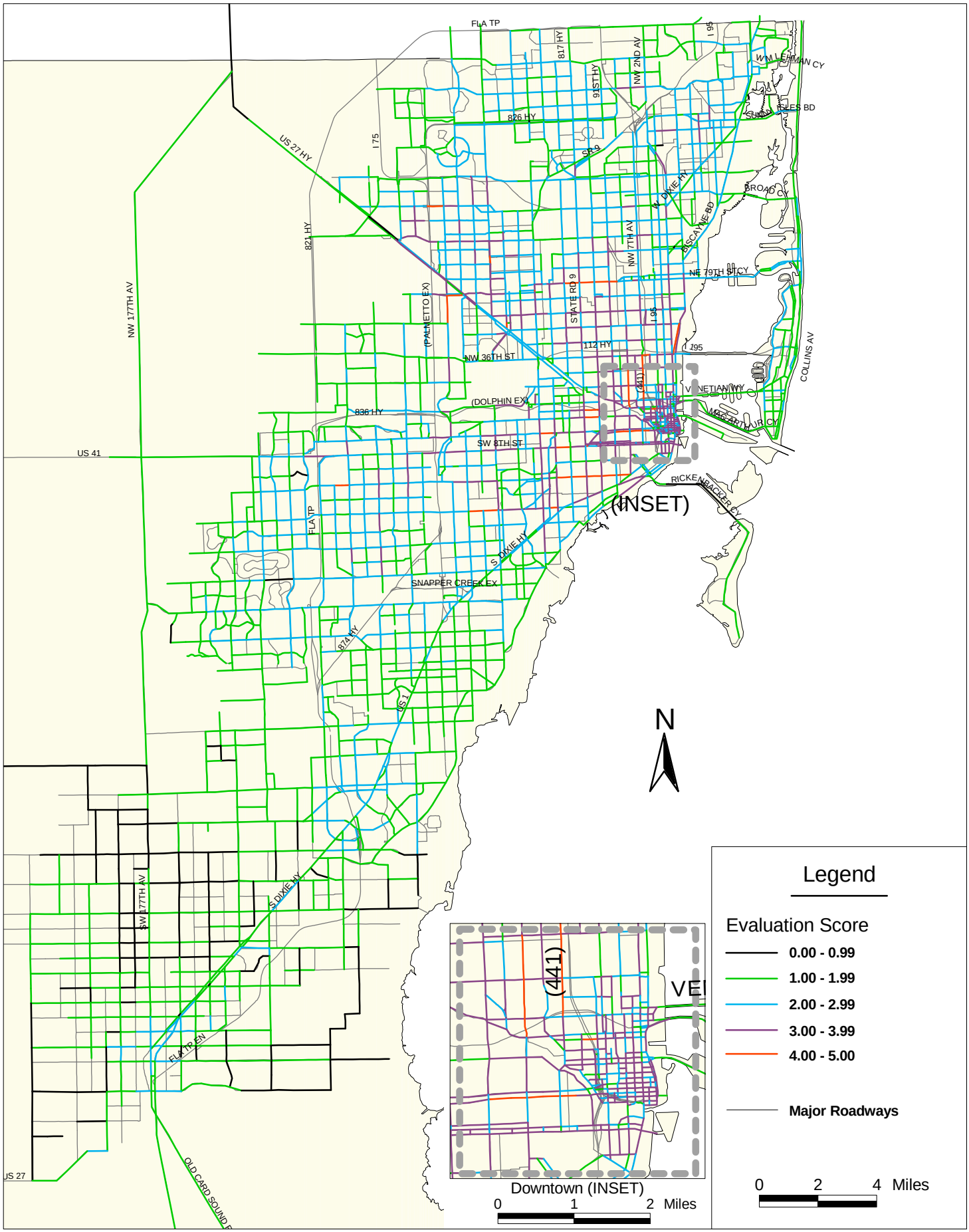

Identification of Candidate Projects

Each segment in the 2000 Bicycle Roadway Network was ranked based on its composite evaluation score. The higher the composite score for a segment the higher the priority for improvement compared to other segments in the analysis. All segments were considered for inclusion in the Candidates Projects List.

Identification of Candidate Bicycle Projects

Bicycle improvements are implemented through the LRTP process and represent an improvement to mobility. The segmentation convention used in the 2000 Bicycle Roadway Network was developed to address changes in the bicycling environment. Because the bicycle environment is not as consistent as the highway environment, many of the segments analyzed are less than 0.25 mile in length. The need to assemble the individual segments of the roadway network into longer, project corridors is apparent, given the fragmented evaluation network and the following considerations:

- The national average length of a bicycle work trip is 2.1 miles and over 1 mile for shopping and school trips.
- The BLOS analysis highlights the fact that the bicycle environment in Miami-Dade County is generally deficient, with a BLOS of D or lower for more than 90 percent of the segments evaluated. Improvements to an individual segment would not contribute to mobility unless adjacent deficient segments are also improved.

Candidate projects were created by assembling adjacent segments with a composite evaluation score of 3 or higher into project corridors. Project Corridors are at least 2 miles in length or connect to an existing bicycle facility, extending the existing facility.

The quantitative process for identifying Candidate Projects was presented to the BPAC at its regular meeting on June 28, 2001. Public participation at the meeting was good, with 23 people participating in the meeting. Meeting attendees were asked to review the list of Candidate Projects. Each small group was asked review the limits of the segments that had been identified through the initial analysis and comment on the need to expand or reduce the project length based on local knowledge. Each group was also asked to add corridors/projects to the list based on local cycling needs that may not have been captured in the technical analysis. No Candidate Project limits were expanded, however many corridors/projects were added. Candidate Projects developed from the technical analysis and those added by the public are depicted on **Figure 5.**

Upon review by the 2025 LRTP Steering Committee, the assembled segments and those additions made at the June 28 BPAC meeting became the Candidate Projects to be considered for adoption in the 2025 Bicycle Minimum Revenue Plan and incorporation into future TIPs.

Figure 5: 2001 Bicycle Candidate Projects

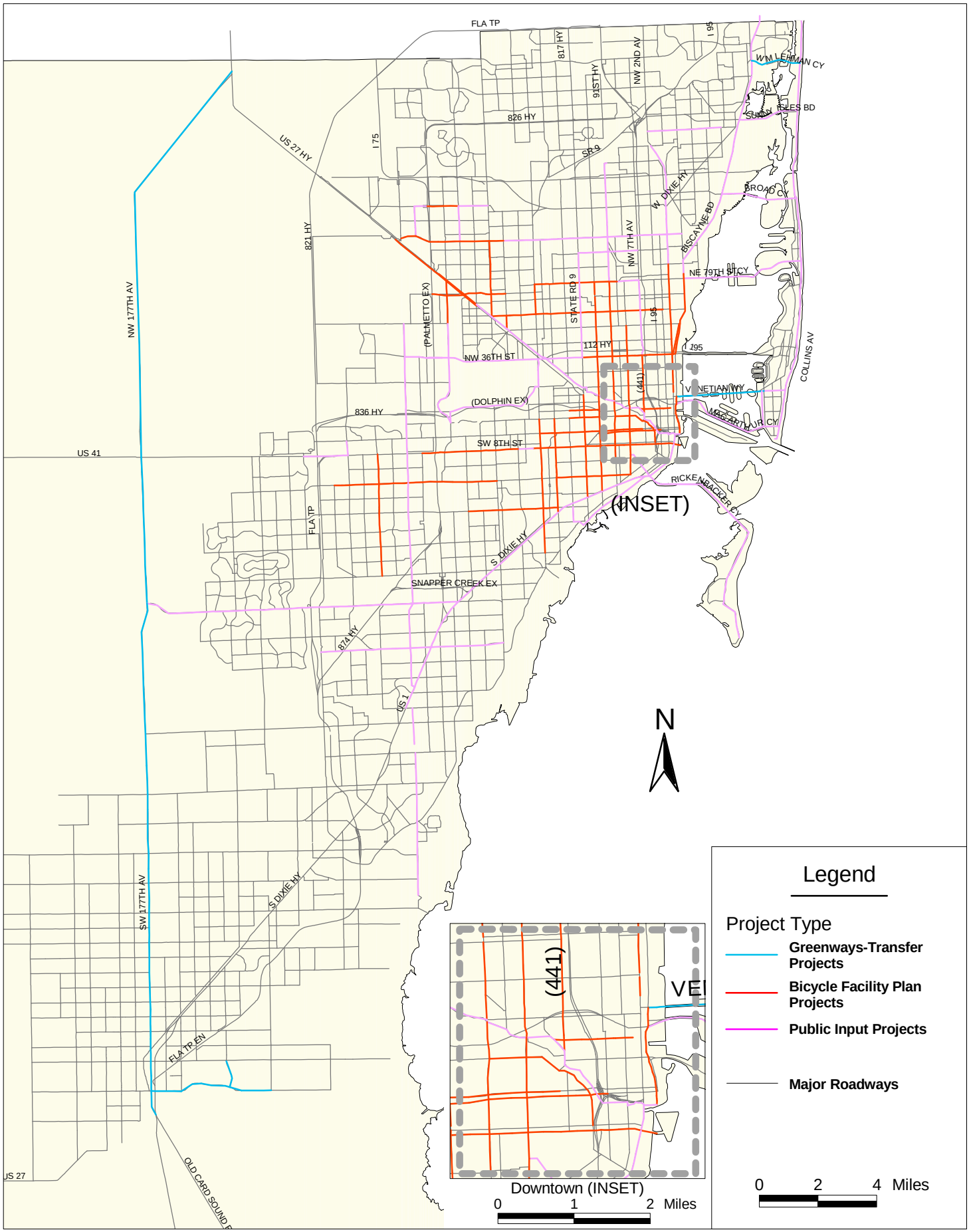

Off-Road Bicycle Facilities Candidate Projects

The list of Candidate Projects for Off-Road Bicycle Facilities in Miami-Dade County was developed by the Bicycle/Pedestrian Advisory Committee in 2000. The 2025 Off-Road Facilities Candidate Projects incorporates the projects previously identified by the BPAC. The BPAC requested that the Greenways Plan be reviewed to determine if any facilities within the Plan would be on-road facilities. An evaluation of the identified Off-Road Candidate Projects was performed to determine if all or a significant portion of the project was on-road. This evaluation produced six projects or portion of projects that were added to the on-road Candidate Projects List (depicted on **Figure 5**).

Feasibility Analysis

All Candidate Projects (Corridors) were analyzed for feasibility to construct/enhance on-road bicycle facilities within the existing right-of-way. Based on the extensive cost associated with right-of-way acquisition, the feasibility analysis was performed to identify implementable projects for inclusion in the Bicycle Plan and ultimately in the 2025 Long Range Transportation Plan. Of the 72 corridors evaluated for right-of-way constraints, 25 corridors were identified for improvements and included in the Minimum Revenue Plan.

Development of Minimum Revenue Plan

Funding Levels

Bicycle projects are funded from a variety of local, state and federal sources. Developers of vacant land are required to construct sidewalks within the property limits at the time of development. As part of the local, state and federal roadway system, maintenance of existing facilities is performed by local Public Works departments and State FDOT Maintenance departments.

Funding sources identified as contributing to funding for projects included in the 2025 Bicycle Plan are Surface Transportation Program (STP) funds, Transportation Enhancement funds, and Congestion Mitigation and Air Quality Improvement Program (CMAQ) funds. Traditionally, local funding sources have also funded bicycle and pedestrian improvements in Miami-Dade County. These sources are not included in the calculation of available funds for projects included in the Bicycle and Pedestrian Priority Plans and Miami-Dade Greenways Plans in order to allow those local funding sources to continue to be available for projects that are identified by other methods.

Previous Long Range Transportation Updates have established a funding level of 1.5 percent of STP and CMAQ funds for bicycle and pedestrian improvements. Maintaining this funding level of 1.5 percent and recognizing the MPO's historical allocation of Enhancement funds for bicycle/pedestrian facilities of 80 percent, a total 2006-2025 funding level of $62.15 million is projected for bicycle and pedestrian facilities. These funds are allocated as a percent of the total bicycle/pedestrian funds for this period by facility type:

- Bicycle On-road Projects
- Pedestrian On-road Projects
- Off-road Projects (Greenways).

Nearly $28 million, or forty-five percent of the funds available for the above facility types were allocated to on-road bicycle facilities.

Minimum Revenue Projects

The BPAC ranked the final On-Road Bicycle Candidate Projects based on average weighted evaluation scores for the corridors and local knowledge. Available funding assigned to bicycle facilities was applied to develop a 2025 Minimum Revenue Plan that is divided into 4 priority categories. Projects included in the Minimum Revenue Plan are listed in **Table 7. *On-Road Bicycle Facilities, 2025 Minimum Revenue Plan*** and depicted in **Figure 6**. **Table 8. *Minimum Revenue Plan, Greenway Bicycle Facilities*** identifies off-road bicycle facilities included in the 2025 Minimum Revenue Plan.

Candidate Projects that were considered unfeasible for implementation due to right-of-way constraints are identified in **Appendix A. *Unfunded Projects***. Unfunded off-road (Greenways) projects are also identified in **Appendix A**.

Table 7. On-Road Bicycle Facilities, 2025 Minimum Revenue Plan

PRIORITY I PROJECTS

Area	Project	Limits	
		From	To
Beach	Venetian Causeway (Miami Beach)[1]	San Marino Island	Alton Road
Central	37th Ave/Douglas Rd	Ingram Hwy	Edgewater Dr
Central	Edgewater Dr	37th Ave/Douglas Rd	Ingram Hwy
Central	Bayshore	22nd Ave	Biscayne Blvd
Central	Bird Rd/SW 40th St	SW 67th Ave	SW 37th Ave
Central	McFarlane	S Bayshore	Main Hwy
Central	NW 11th St	NW 32nd Ave	NW 22nd Ave
Central	Palm Ave	NW 62nd Ave/W 9th St	W Okeechobee Rd
Central	Red Road	US1	8th St
North	N Federal Hwy	NE 54th St	NE 36th St
North	Venetian Causeway (Miami)[1]	Bayshore Dr.	San Marco Island
West	SW 48 St Bike Lanes[1]	SW 117 Ave	SW 82 Ave

1. Included in the Non-Motorized Component of the 2002-2006 Miami-Dade TIP.

Table 7. On-Road Bicycle Facilities, 2025 Minimum Revenue Plan (continued)

PRIORITY II PROJECTS

Area	Project	Limits	
		From	To
Central	Hialeah Ex	SR 826 Ex	Palm Ave
Central	NW South River Dr	NW 106th St	Lenape Dr
Central	SW 37th Ave	NW 7th St	US Hwy 1
North	NE 2nd Ave3	NE 87th St	NE 17th St
Northwest	Hialeah Ex	SR 826 Ex	Palm Ave
Northwest	NW 10th St	NW 8th St	NE 1St Ave
Northwest	W 24th Ave	W 49th St	W 68th St
West	SW 97th Ave	SW 8th St	SW 72nd St

PRIORITY III PROJECTS

Area	Project	Limits	
		From	To
Central	42nd Ave/E 8th Ave	79th St/E 25th St	62nd St/W 9th St
Central	Milam Dairy Rd/NW 72nd Ave	7th St	NW 58th St
Central	SW 112th St/111th St	SW 117th Ave	SW 57th Ave/Red Road
North	42nd Ave/E 8th Ave	79th St/E 25th St	62nd St/W 9th St
North	NW 95th St	NW 27th Ave	NW 7th Ave
Northwest	Milam Dairy Rd/NW 72nd Ave	7th St	NW 58th St
South	SW 112th St/111th St	SW 117th Ave	SW 57th Ave/Red Road

PRIORITY IV PROJECTS

Area	Project	Limits	
		From	To
Beach/CBD	Rickenbacker CY	SW 12th Ave	End of Road
Beach/CBD	Venetian Causeway	Biscayne Blvd/US1	Alton Rd
Beach/CBD	West Ave	17th St	5th St
Central	Rickenbacker CY	SW 12th Ave	End of Road
North	Venetian Causeway	Biscayne Blvd/US1	Alton Rd
Northwest	Krome Ave	Okeechobee (Broward)	US1 (Homestead)
South	Krome Ave	Okeechobee (Broward)	US1 (Homestead)
South	SW 344th St/Palm Dr	US1	137th Ave
South	152 Ave	Palm Dr	328th St
South	SW 87th Ave1	S Of SW 232nd St	SW 168th St
West	Krome Ave	Okeechobee (Broward)	US1 (Homestead)

Table 8. Greenway Bicycle Facilities, 2025Minimum Revenue Plan

Area	Project or Facility	Limits	
		From	To
Beach / CBD	Atlantic (part)	1st St	Broward County Line
Beach / CBD	Dade Blvd Bike Path[1]	Alton Rd	23rd St
Beach / CBD	Fort Dallas Riverwalk[1]	Riverwalk Station	SW 2nd Ave
Beach / CBD	Lummus Park Riverwalk[1]	I-95	NW 4th Ave
Beach / CBD	M Path (part)	Kendall Dr	NE 15th St
Beach / CBD	Miami River (part)	NW 42nd Ave	Brickell Ave
Beach / CBD	North Beach Corridor Ph 2[1]	75th St	North Shore Park/87th St
Beach / CBD	North Beach Corridor[1]	65th St	75th St
Beach / CBD	North Miami Bike Path[1]	FIU North Campus	
Beach / CBD	Riverwalk Extension[1]	NW 1st St	SW 2nd St
Central	M Path (part)	Kendall Dr	NE 15th St
Central	Miami River (part)	NW 42nd Ave	Brickell Ave
South	Biscayne-Everglades Trail[1]	Black Point Park	Florida City
South	South Dade	W Palm Dr	Kendall Dr

1. Included in the Non-Motorized Componenet of the 2002-2006 Miami-Dade TIP.

PRIORITY II PROJECTS

Area	Project or Facility	Limits	
		From	To
Beach / CBD	Atlantic (part)	1st St	Broward County Line
Beach / CBD	M Path (part)	Kendall Dr	NE 15th St
Beach / CBD	Miami River (part)	NW 42nd Ave	Brickell Ave
Central	M Path (part)	Kendall Dr	NE 15th St
Central	Miami River (part)	NW 42nd Ave	Brickell Ave

PRIORITY III PROJECTS

Area	Project or Facility	Limits	
		From	To
Beach / CBD	Miami River (part)	NW 42nd Ave	Brickell Ave
Central	Miami River (part)	NW 42nd Ave	Brickell Ave

PRIORITY IV PROJECTS

Area	Project or Facility	Limits	
		From	To
Beach / CBD	Miami River (part)	NW 42nd Ave	Brickell Ave
Central	Miami River (part)	NW 42nd Ave	Brickell Ave

Figure 6: 2001 Bicycle Minimum Revenue Plan

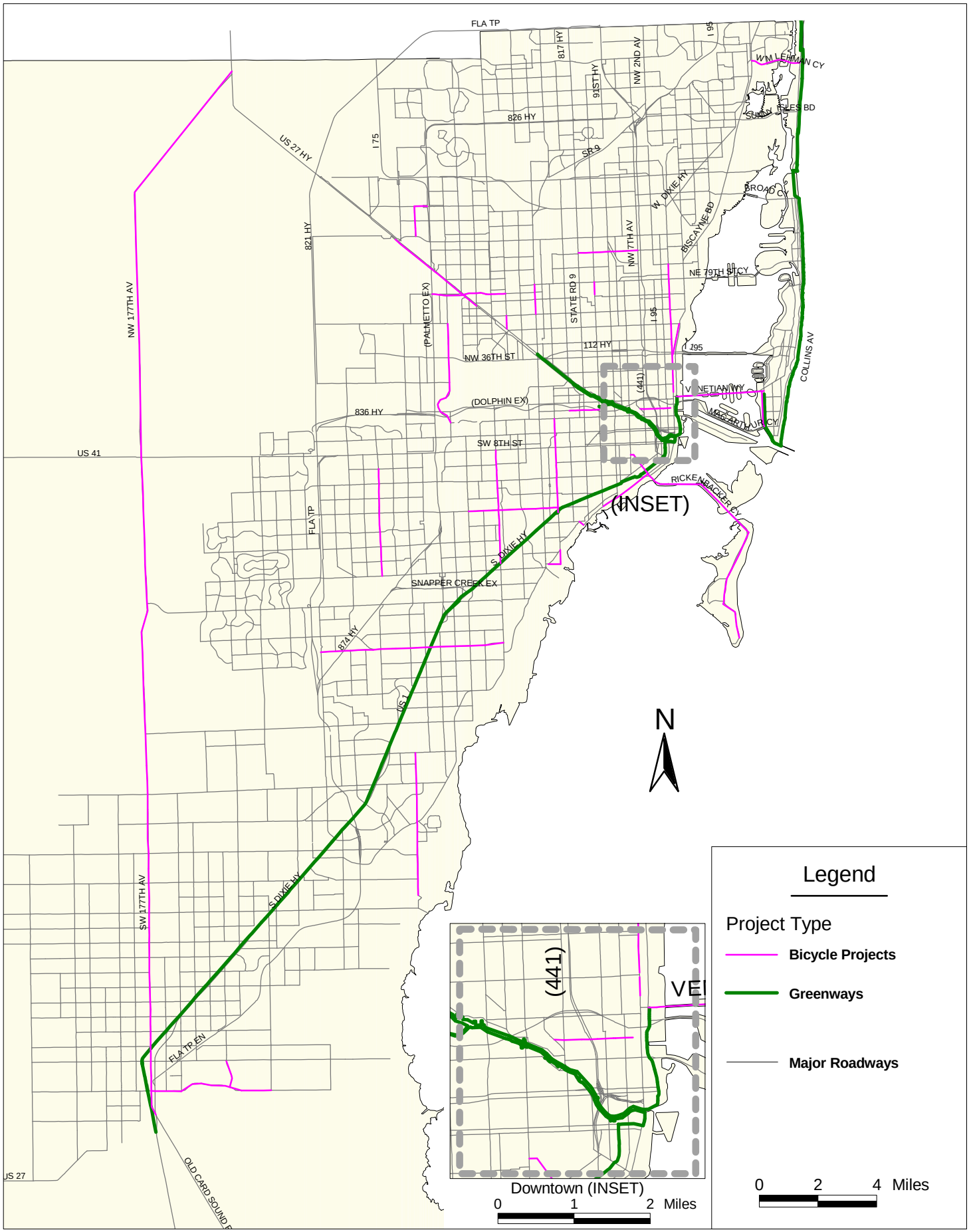

Implementation

The implementation of bicycle and pedestrian projects has traditionally been piece-meal, requiring focused support for individual projects. Projects constructed by individuals in this manner, either by communities or specific interest groups, does not produce an integrated bicycle or pedestrian network. Recognition that a single plan should guide the prioritization of projects is required to maximize the resources available for bicycle and pedestrian projects. Implementation of an overall plan intended to increase mobility that is based on data and established community priorities requires that funding for bicycle and pedestrian projects identified as high priority in the Adopted Plans be included in the standard process for funding transportation projects.

Recognition of Adopted Plans

Communities and interest groups have historically prepared applications for Federal Enhancement funds to implement bicycle and pedestrian projects. Public Works Departments, responsible for maintaining the bicycle and pedestrian infrastructure, also construct new facilities when existing roads are resurfaced or widened. Parks and Recreation Departments and School Boards construct bicycle and pedestrian facilities when they serve the facilities each is responsible for providing. The first step in unifying the implementation of bicycle and pedestrian facilities is the recognition of the Bicycle and Pedestrian Plans developed by the Metropolitan Planning Organization as the Adopted Plans for the Miami-Dade Urbanized Area. It is recommended that the MPO undertake the following steps in support of the successful recognition of the adopted MPO Plans:

1) Disseminate the Adopted Plans to individuals, interest groups, municipalities and agencies/departments that have traditionally been active in implementation of bicycle and pedestrian projects.

- Create a mailing list that includes prior Enhancement Application applicants, bicycle shops/clubs, municipalities within the county, BPAC members, elected officials, representatives of the Miami-Dade Visitors and Convention Bureau, senior staff of the Miami-Dade County School Board, senior staff of the Departments within the County that have a role in providing or maintaining bicycle and pedestrian facilities and members of the general public who request inclusion.
- Distribute the Executive Summary/brochure summarizing the Adopted Plans to the mailing list. Identify the key dates in the process of Adopted Plan development and provide contact information to increase participation in the development of future plans.
- Present the Adopted Plans to interested community groups, County/municipal staff and elected officials that have a role in providing or maintaining bicycle and pedestrian facilities. Outline the extensive data collection efforts and develop a buy-in for the process of basing project selection on data and the development of a multi-modal network that enhances mobility. Develop a video that may accompany copies of the Plans and Suitability Maps to community meetings and that may be aired on public access television channels. Identify that the Adopted

MPO Bicycle and Pedestrian Plans are the tools for directing the implementation of bicycle and pedestrian projects.

- Require that bicycle and pedestrian projects submitted for any matching funds (local, state or federal) are included in the Adopted Cost Feasible Bicycle or Pedestrian Plan.
- Solicit comments and recommendations from participants in the presentations and recipients of mailed materials over the Internet, by phone and by mail about the process, the priorities, and the projects selected. Document comments and recommendations received by type and use to guide the development of future Adopted Plans.

Successful Implementation of Adopted Plans

Bicycle and Pedestrian projects have not historically been recognized in the transportation project implementation process utilized for highway and transit projects. The MPO adopts its Transportation Improvement Plan annually and may revise it at every MPO meeting to reflect changes in schedules for the planning, engineering or construction of projects within the TIP. The TIP documents the progression of a project through the required phases of implementation for the project type. Typically each bicycle and pedestrian project is viewed as unique, even compared to other bicycle or pedestrian projects. This has come to signify that each project must have an individually tailored approach. As long as this remains the case, bicycle and pedestrian projects will continue to be isolated and not become part of Miami-Dade County's overall transportation system, mainstreamed into the overall approach to implementing transportation projects. Each requirement for individual attention and monitoring only insures that something will be left out, or the time to perform the individual work will not be available. The first step in developing a continuous flow of bicycle and pedestrian projects from identification of priorities to ribbon-cutting is the standardization of the process:

1) Develop a process for the implementation of bicycle and pedestrian projects in coordination with FDOT District 6 and other implementing and permitting agencies that meets the need for planning, engineering and construction management of these project types while minimizing exceptions to the current process employed by the FDOT or other agencies for the implementation of highway projects.

- Meet with the FDOT and other implementing agencies to identify the types of studies, process and reviews currently employed for highway project that would be applicable to the implementation of bicycle and pedestrian projects. Assess the completeness of the current studies, process and reviews to meet the minimum needs for implementation of a bicycle or pedestrian project.
- Coordinate with the South Florida Water Management District to identify projects by type and develop the minimum permitting requirements for each project type. Document categorical exemptions for certain project types to expedite the construction and reduce the cost of implementation.

- Create a process flow chart to document the studies, process and reviews applicable to typical bicycle and pedestrian projects. Identify the circumstances when other studies, processes of reviews may be necessary (facility crosses a bridge, for example).
- Develop a handbook for the effective implementation of bicycle and pedestrian projects in the Miami-Dade MPO that details the process established after consultation with implementing and permitting agencies. Identify contact persons at each agency that can address issues not documented in the handbook.
- Implement the process developed and monitor its effectiveness semi-annually to determine if improvements/modifications are indicated. Report the effectiveness of the process and recommendations for improvement to the MPO Governing Board.

The second step in successful implementation of Adopted Plans is to monitor the progress of projects through the process to develop a baseline understanding of the give and take necessary to move a project to completion. The monitoring should include a decision-making process that permits the re-prioritization of projects if delay is encountered in order to permit another project to move forward and it should include regular amendments to the TIP to recognize changes in project schedules. Inclusion in the TIP makes any delays or accelerations known to interested parties.

2) Establish a process that is inclusive and provides for regular update to the Five-Year Bicycle and Pedestrian Implementation Plans.

- Update the Plans annually to recognize constraints and opportunities created in the implementation of priority projects. Establish a five-year plan for implementation of the highest priority projects that recognizes the time required to perform the engineering design, environmental permitting and construction letting associated with a project. Use the Five-Year Bicycle and Pedestrian Implementation Plan as the basis for including projects in the Transportation Improvement Plan (TIP) of the Miami-Dade MPO.

  Monitor the progress of initial implementation schedules and adjust expectations accordingly to realistically represent the time it takes to implement projects in the Adopted Plans. Request progress reports from the implementing agency Project Managers regularly and understand the cause of delays that are identified. Document delays by type and develop strategies to expedite the solution of delays that are documented as “typical” to a project type.

  Maintain a list of “next” priority projects from the Adopted Plans to include in the implementation schedule if delays are encountered on projects in the TIP. Amend the TIP as required to maintain a steady flow of projects from planning to engineering to construction. Establish goals for performance that are shared with the Florida Department of Transportation District 6 that allow the MPO to guide the implementation of bicycle and pedestrian projects.

- Build a constituency from the mailing list of interested individuals and communities and provide notice of key dates in the process when the progress of projects in the TIP are reviewed and delays and opportunities are identified. Schedule progress reviews at least semi-annually and document trends in delays and progress that may require additional action or recognition to keep a project on schedule. Use the constituents to assist in limiting the delays by expediting permitting, providing personnel or expertise. Include the Public Works and Planning staff of the municipalities within the County as a core resource in the progress review.

- Publish key dates in the process in the newspaper, on the MPO Website, at bicycle shops, in community newsletters and through inter-local communication tools available to the MPO. Disseminate changes in project schedules to the mailing list of interested parties to increase awareness of delays and projects accelerations, managing expectations about project completion dates.

The third step in successful implementation of Adopted Plans is maintenance of the data and re-evaluation of priorities on a regular basis. The MPO updates its Long Range Transportation Plan every three years. The Adopted Bicycle and Pedestrian Plans should remain a part of this regular process. For the 2025 Update to the LRTP, data collection efforts were extensive, producing a database of baseline physical conditions for bicycle and pedestrian facilities. Subsequent data collection efforts may be reduced, building on the 2025 Update efforts. The 2025 Update also saw the establishment of Evaluation Criteria that were employed to rank bicycle and pedestrian projects within the Miami-Dade Urbanized Area.

3) To remain relevant, the 2000 Bicycle and Pedestrian Database developed as part of the 2025 LRTP Update should be maintained, with additional review afforded at each LRTP Update. The process should be expanded both in time and scope to build support for future projects and to include participation by a more diverse segment of the community.

- Maintain a record of improvements to bicycle and pedestrian facilities to facilitate the update of the 2000 Bicycle and Pedestrian Database. Map the improvements semi-annually to make the information available on a timely basis. Survey the improvements as completed and enter new data in the 2000 Bicycle and Pedestrian Database semi-annually. Post the completion of projects and improvement of existing facilities on the Internet and make the information available to clubs and organizations that serve the bicycling/walking public, including tourists.

- Update the 2000 Bicycle and Pedestrian Database with each LRTP Update. Survey all facilities in the Adopted Priority Plan, new facilities and facilities for which re-survey is requested by an implementing or maintenance agency. Update the Database accordingly.

- Start the update eighteen months prior to the scheduled adoption of the associated LRTP Update and develop public outreach programs. The process of building consensus for bicycle and pedestrian projects takes longer than the process for developing highway and transit priorities. The impact of bicycle and pedestrian projects is local, until a network is developed where improvements than enhance the network. Communities impacted by proposed projects are located throughout the Miami-Dade Urbanized Area. Public participation should include those communities in which the priority projects are located.

- Expand the process to include the development of Corridor Plans that include improvements that are beyond the scope of a stand-alone bicycle or pedestrian project. The bicycle network in the Miami-Dade Urbanized Area is poor and opportunities for improvements are limited by right-of-way constraints. The successful development of a bicycle network within the urbanized area of the County will require the development of Corridor Plans that address streetscapes, right-of-way, traffic operations and on-street parking to create opportunities for bicycle and pedestrian facilities.

Appendix A

2025 BICYCLE FACILITIES PLAN

PRIORITY IV - UNFUNDED ON-ROAD BICYCLE PROJECTS

CATEGORY I[1]

Area	Project or Facility	Limits	
		From	To
Beach / CBD	17th St	Alton Rd	Collins Ave
Beach / CBD	Collins Ave	Alton Rd	County Line
Beach / CBD	Lehman Causeway	Biscayne Blvd	Ocean Ave
Beach / CBD	Lehman Causeway/NE 192 St	Biscayne Blvd/US1	Ocean Ave/AIA
Beach / CBD	Macarthur CY	Biscayne Blvd	Alton Rd
Beach / CBD	NE 123rd St	Biscayne Blvd	Byron Ave
Beach / CBD	NE 163RD St/ Sunny Isles Blvd/826	Collins Ave	Biscayne Blvd
Beach / CBD	NE 2nd Ave/Griffing BD/S Biscayne River Dr	NW 87th St	NE 159th St
Beach / CBD	North River Dr/Okeechobee RD	SW 3RD St	W 8th Ave
Beach / CBD	NW 103 St	Palm Ave	NE 6th Ave
Beach / CBD	NW 12th Ave	NW 54th St	SW 22nd St
Beach / CBD	NW 22nd Ave	NW 71St St	S Dixie Hwy
Beach / CBD	NW 7th St/NW South River Dr/SW 4th St	NW 14th Ave	SW 7th St
Beach / CBD	S Bayshore Dr	Grand Ave	US1/Brickell
Beach / CBD	SW 1St St	SW 22nd Ave	SW 2nd Ave
Beach / CBD	SW 22nd St	SW 37th Ave	SW 12th Ave
Beach / CBD	SW 4th St/SW 3RD St	SW 2nd Ave	North River Dr
Beach / CBD	SW 8th St	SW 44th Ave	Brickell Bay Dr
Beach / CBD	US Hwy 1	NE 15th St	SE 4th St
Beach / CBD	W Flagler St	SW 42nd Ave	SW 8th Ave
Central	North River Dr/Okeechobee RD	SW 3RD St	W 8th Ave
Central	NW 12th St / Perimeter Rd/ NW 42nd Ave	NW 72nd Ave	NW 36th St
Central	NW 22nd Ave	NW 71St St	S Dixie Hwy
Central	NW 27th Ave	NW 17th St	S Dixie Hwy
Central	NW 36th St	NW 87th Ave	NW 27th Ave

2025 BICYCLE FACILITIES PLAN

PRIORITY IV - UNFUNDED ON-ROAD BICYCLE PROJECTS

CATEGORY I[1]

Area	Project or Facility	Limits	
		From	To
Central	NW 63rd St/W 9th St	W 4th Ave	Miami Ave
Central	NW 7th St	NW 32nd Ave	NW 22nd Ave
Central	S Bayshore Dr	Grand Ave	US1/Brickell
Central	S Dixie Hwy	SW 144th St	SW 26th Rd
Central	SW 22nd St	SW 37th Ave	SW 12th Ave
Central	SW 24th St	SW 112th Ave	SW 57th Ave
Central	SW 42nd Ave	NW 7th St	Hardee Rd
Central	SW 4th St/SW 3RD St	SW 2nd Ave	North River Dr
Central	SW 8th St	SW 44th Ave	Brickell Bay Dr
Central	SW 8th St/Tamiami	SW 82nd Ave	Granada Blvd
Central	SW 8th St/Tamiami	SW 49th Ave	SW 44th Ave
Central	W 4th Ave	W 49th St	W 9th St
North	Biscayne Bd	NE 82nd St	NE 36th St
North	Biscayne Bd	NE 82nd St	County Line
North	Macarthur CY	Biscayne Blvd	Alton Rd
North	NE 159th St	NW 2nd Ave	NE 18th Ave
North	NE 2nd Ave/Griffing BD/S Biscayne River Dr	NW 87th St	NE 159th St
North	NE 79th St CY / Normandy Dr	Collins Ave	Biscayne Blvd
North	North River Dr/Okeechobee RD	SW 3RD St	W 8th Ave
North	NW 103 St	Palm Ave	NE 6th Ave
North	NW 17th Ave	NW 79th St	SW 16th St
North	NW 17th Ave	NW 79th Ave	NW 143rd St
North	NW 22nd Ave	NW 71St St	S Dixie Hwy
North	NW 27th Ave	NW 36th St	NW 95th St
North	NW 36th St	NW 27th Ave	US Hwy 1
North	NW 36th St	NW 87th Ave	NW 27th Ave
North	NW 63rd St/W 9th St	W 4th Ave	Miami Ave

2025 BICYCLE FACILITIES PLAN

PRIORITY IV - UNFUNDED ON-ROAD BICYCLE PROJECTS

CATEGORY I[1]

Area	Project or Facility	Limits	
		From	To
North	NW 79th St	E 8th Ave	NW 14th Ave/NW 81St
North	NW 79th St	NW 81St RD	NW 7th Ave
North	NW 7th Ave	NW 36th St	NW 8th St
North	NW 7th Ave	NW 36th St	NW 79th St
North	SW 4th St/SW 3RD St	SW 2nd Ave	North River Dr
North	US Hwy 1	NE 15th St	SE 4th St
Northwest	North River Dr/Okeechobee RD	SW 3RD St	W 8th Ave
Northwest	NW 103 St	Palm Ave	NE 6th Ave
Northwest	NW 12th St / Perimeter Rd/ NW 42nd Ave	NW 72nd Ave	NW 36th St
Northwest	NW 36th St	NW 87th Ave	NW 27th Ave
Northwest	NW 72nd Ave	NW South River Dr	NW 58th St
Northwest	NW 79th St	E 8th Ave	NW 14th Ave/NW 81St
Northwest	SW 107 Ave	SW 8th St	W Flagler St
Northwest	SW 4th St/SW 3RD St	SW 2nd Ave	North River Dr
Northwest	SW 87th Ave	S Dixie Hwy	NW 58th St
Northwest	W 12th Ave	E 49th St	W 68th St
Northwest	W 4th Ave	W 49th St	W 9th St
Northwest	W 68th St	NW 20th Ave	W 12th Ave
Northwest	W 68th St	W 12th Ave	W 4th Ave
Northwest	W Okeechobee Rd	W 32nd Place	W 8th Ave
South	S Dixie Hwy	SW 144th St	SW 26th Rd
South	SW 87th Ave	S Dixie Hwy	NW 58th St
South	SW 88th St/Kendall	SW 177th Ave	S Dixie Hwy
West	Kendall/88th St	SW 127th Ave	177th Ave
West	NW 103rd St/W 49th St	W 28th Ave	Palm Ave
West	SW 24th St	SW 112th Ave	SW 57th Ave
West	SW 87th Ave	S Dixie Hwy	NW 58th St
West	SW 88th St/Kendall	SW 177th Ave	S Dixie Hwy

2025 BICYCLE FACILITIES PLAN

PRIORITY IV - UNFUNDED ON-ROAD BICYCLE PROJECTS

CATEGORY I[1]

Area	Project or Facility	Limits	
		From	To
West	SW 8th St	SW 122nd Ave	SW 107 Ave
West	SW 8th St/Tamiami	SW 82nd Ave	Granada Blvd

1. Candidate project not feasible due to identified right of way constraint.

2025 BICYCLE FACILITIES PLAN
PRIOIRTY IV - UNFUNDED ON-ROAD BYCIYCLE PROJECTS
CATEGORY II[1]

	Limits	
Project or Facility	**From**	**To**
MIAMI LAKES DR	PALMETTO EXPWY	67TH AVE/LUDLUM RD
GRANDA BD	SUNSET DR/SW 72ND ST	ANASTASIA
CURTIS PARK WAY	DEER RUN	36TH ST
NE 215TH ST	HIGHLAND LAKES BD	W DIXIE HY
NE 215TH ST	NE 12TH AV	N OF NE 12TH AV
NE 215TH ST	SAN SIMEON WY	NE 10TH AV
NW 215TH ST	NE 2ND AV	SAN SIMEON WY
NW 215TH ST	NW 2ND AV	N MIAMI AV
NW 215TH ST	NW 27TH AV	FLORIDA TP
NW 215TH ST	NW 47TH AV	NW 37TH AV
AVENTURA HOSPITAL	BISCAYNE BD	NE 34TH AV
NE 208TH ST	BISCAYNE BD	NE 207TH ST
NE 34TH AV	N COUNTRY CLUB DR	NE 207TH ST
NE 2ND AV	NE 207TH ST	NW 215TH ST
NW 207TH ST	NW 2ND AV	NE 207TH ST
NW 2ND AV	NW 207TH ST	NW 215TH ST
NE 12TH AV	NE 205TH TE	NE 215TH ST
NE 205TH TE	NE 12TH AV	NE 13TH AV
W DIXIE HY	NE 203RD ST	NE 215TH ST
NE 203RD ST	W DIXIE HY	E DIXIE HY
NE 203RD ST	W DIXIE HY	BISCAYNE BD
NE 203RD ST	HIGHLAND LAKES BD	W DIXIE HY
NE 205TH TE	NE 12TH AV	HIGHLAND LAKES BD
NE 205TH TE	NE 10TH AVRD	NE 12TH AV
SAN SIMEON WY	NE 205TH TE	NE 215TH ST
N COUNTRY CLUB DR	W COUNTRY CLUB DR	NE 34TH AV
AVENTURA BD	BISCAYNE BD	W COUNTRY CLUB DR
HIGHLAND LAKES BD	NE 199TH ST	NE 203RD ST
NE 10TH AVRD	NE 10TH AV	NE 205TH TE
NE IVES DAIRY RD	NE 2ND AV	NE 10TH AVRD
NE 2ND AV	NE 199TH ST	NE 207TH ST
NW 199TH ST	NW 2ND AV	NE 199TH ST
NW 2ND AV	NW 199TH ST	NW 207TH ST
NW 199TH ST	NW 7TH AV	NW 2ND AV
NW 67TH AV	NW 202ND ST	N OF NW 202ND ST
NW 199TH ST	NW 12TH AV	NW 7TH AV
NW 57TH AV	HONEY HILL DR	N OF NW 204TH ST

2025 BICYCLE FACILITIES PLAN
PRIOIRTY IV - UNFUNDED ON-ROAD BYCIYCLE PROJECTS
CATEGORY II[1]

	Limits	
Project or Facility	**From**	**To**
HONEY HILL RD	NW 202ND ST	NW 57TH AV
NW 27TH AV	NW 199TH ST	NW 215TH ST
NW 199TH ST	NW 32ND AV	NW 27TH AV
NE 12TH AV	NE 109TH ST	NE 205TH TE
NW 199TH ST	NW 37TH AV	NW 32ND AV
NW 37TH AV	NW 199TH ST	NW 215TH ST
W COUNTRY CLUB DR	NE 190TH ST	AVENTURA BD
NW 199TH ST	NW 42ND AV	NW 37TH AV
NW 42ND AV	NW 199TH ST	NW 204TH ST
NW 199TH ST	NW 27TH AV	FLORIDA TP
NW 199TH ST	NW 47TH AV	NW 42ND AV
NW 47TH AV	NW 199TH ST	NW 215TH ST
HONEY HILL DR	NW 57TH AV	NW 199TH ST
NE 190TH ST	NE 29TH AV	W COUNTRY CLUB DR
NE 191ST ST	BISCAYNE BD	NE 29TH AV
NE 2ND AV	NE 191ST ST	SIERRA DR
NW 191ST ST	NW 2ND AV	NE 191ST ST
NW 2ND AV	NW 191ST ST	NW 199TH ST
NW 191ST ST	NW 7TH AV	NW 2ND AV
NW 7TH AV	NW 191ST ST	NW 199TH ST
NW 191ST ST	NW 12TH AV	NW 7TH AV
NW 12TH AV	NW 191ST ST	NW 199TH ST
NE 29TH AV	NE 187TH ST	NE 190TH ST
NW 27TH AV	NW 191ST ST	NW 199TH ST
W DIXIE HY	NE 186TH ST	NE 193RD ST
BISCAYNE BD	NE 186TH ST	NE 187TH ST
NE 186TH ST	W DIXIE HY	BISCAYNE BD
NW 191ST ST	NW 32ND AV	NW 27TH AV
NW 32ND AV	NW 191ST ST	NW 199TH ST
NE 186TH ST	NE 22ND AV	W DIXIE HY
NE 22ND AV	NE 185TH ST	NE 199TH ST
NW 191ST ST	NW 37TH AV	NW 32ND AV
NW 37TH AV	NW 191ST ST	NW 199TH ST
NW 191ST ST	NW 42ND AV	NW 37TH AV
NW 42ND AV	NW 191ST ST	NW 199TH ST
NW 47TH AV	NW 191ST ST	NW 199TH ST
NW 191ST ST	NW 47TH AV	NW 42ND AV

2025 BICYCLE FACILITIES PLAN
PRIOIRTY IV - UNFUNDED ON-ROAD BYCIYCLE PROJECTS
CATEGORY II[1]

	Limits	
Project or Facility	**From**	**To**
NE 185TH ST	NE 19TH AV	NE 22ND AV
NE 185TH ST	NE 18TH AV	NE 19TH AV
NE 18TH AV	NE 18TH RD	NE 199TH ST
NW 191ST ST	NW 57TH AV	NW 47TH AV
NW 57TH AV	NW 191ST ST	HONEY HILL DR
NE 185TH ST	NE 15TH AV	NE 18TH AV
NE 19TH AV	NE 18TH RD	NE 185TH ST
NE 18TH RD	NE 18TH AV	NE 19TH AV
NE 185TH ST	NE 10TH AV	NE 15TH AV
NE 2ND AV	NE 183RD ST	NE 191ST ST
NW 183RD ST	NW 2ND AV	NE 183RD ST
NW 2ND AV	NW 183RD ST	NW 191ST ST
NW 183RD ST	NW 7TH AV	NW 2ND AV
NW 7TH AV	NW 183RD ST	NW 191ST ST
NW 183RD ST	NW 12TH AV	NW 7TH AV
NW 12TH AV	NW 183RD ST	NW 191ST ST
NW 67TH AV	NW 183RD ST	NW 202ND ST
NW 186TH ST	NW 82ND AV	NW 77TH AV
NW 183RD ST	NW 14TH AV	NW 12TH AV
NW 186TH ST	NW 87TH AV	NW 82ND AV
NE MIAMI GARDENS DR	NE 6TH AV	NE 10TH AV
NE 183RD ST	NE 2ND AV	NE 6TH AV
NW 183RD ST	NW 17TH AV	NW 12TH AV
NW 186TH ST	I-75 EX	NW 87TH AV
NW 183RD ST	NW 22ND AV	NW 17TH AV
NW 22ND AV	NW 183RD ST	NW 196TH TE
NW 186TH ST	NW 77TH AV	NW 67TH AV
NW 183RD ST	NW 27TH AV	NW 22ND AV
NW 27TH AV	NW 183RD ST	NW 191ST ST
NW 183RD ST	NW 32ND AV	NW 27TH AV
NW 32ND AV	NW 183RD ST	NW 191ST ST
NW 183RD ST	NW 37TH AV	NW 32ND AV
NW 37TH AV	NW 183RD ST	NW 191ST ST
NW 183RD ST	NW 42ND AV	NW 37TH AV
NW 42ND AV	NW 183RD ST	NW 191ST ST
NW 183RD ST	NW 47TH AV	NW 42ND AV
NW 47TH AV	NW 183RD ST	NW 191ST ST

2025 BICYCLE FACILITIES PLAN
PRIOIRTY IV - UNFUNDED ON-ROAD BYCIYCLE PROJECTS
CATEGORY II[1]

	Limits	
Project or Facility	**From**	**To**
NW 183RD ST	NW 52ND AV	NW 47TH AV
NW 183RD ST	NW 57TH AV	NW 52ND AV
NW 57TH AV	NW 183RD ST	NW 191ST ST
NW 183RD ST	NW 67TH AV	NW 57TH AV
NW 2ND AV	US 441	NW 183RD ST
NE 172ND ST	W DIXIE HY	BISCAYNE BD
W DIXIE HY	NE 171ST ST	NE 186TH ST
US 441	NW 7TH AVEX	NW 2ND AV
NW 82ND AV	NW 178TH ST	NW 186TH ST
NW 12TH AV	NW 179TH ST	NW 183RD ST
NW 178TH ST	NW 87TH AV	NW 82ND AV
NW 87TH AV	NW 178TH ST	NW 186TH ST
NW 175TH ST	NW 17TH AV	NW 12TH AV
NW 17TH AV	NW 175TH ST	NW 183RD ST
NW 175TH ST	NW 22ND AV	NW 17TH AV
NW 22ND AV	NW 175TH ST	NW 183RD ST
NE 171ST ST	NE 19TH AV	W DIXIE HY
NE 19TH AV	NE 171ST ST	NE 18TH RD
NW 175TH ST	NW 27TH AV	NW 22ND AV
NW 27TH AV	NW 175TH ST	NW 183RD ST
NE 171ST ST	NE 15TH AV	NE 19TH AV
NE 15TH AV	NE 171ST ST	NE 185TH ST
NW 175TH ST	NW 32ND AV	NW 27TH AV
NW 32ND AV	NW 175TH ST	NW 183RD ST
NW 175TH ST	NW 37TH AV	NW 32ND AV
NW 37TH AV	NW 175TH ST	NW 183RD ST
NW 175TH ST	NW 42ND AV	NW 37TH AV
NW 42ND AV	NW 173RD DR	NW 183RD ST
NW 7TH AVEX	NW 7TH AV	US 441
NW 7TH AV	NW 175TH ST	NW 183RD ST
NW 173RD DR	NW 47TH AV	NW 42ND AV
NW 47TH AV	NW 173RD DR	NW 183RD ST
SR 826 EX	GOLDEN GLADES RAMP	NW 7TH AV
NW 173RD DR	NW 52ND AV	NW 47TH AV
NW 52ND AV	NW 173RD DR	NW 183RD ST
NW 173RD DR	NW 57TH AV	NW 52ND AV
NW 57TH AV	NW 173RD DR	NW 183RD ST

2025 BICYCLE FACILITIES PLAN
PRIOIRTY IV - UNFUNDED ON-ROAD BYCIYCLE PROJECTS
CATEGORY II[1]

	Limits	
Project or Facility	**From**	**To**
W DIXIE HY	NE 167TH ST	NE 171ST ST
NE 167TH ST	NE 19TH AV	NE 22ND AV
NE 19TH AV	NE 167TH ST	NE 171ST ST
NE 15TH AV	NE 167TH ST	NE 171ST ST
NE 35TH ST	SUNNY ISLES BD	NE 171ST ST
NE 167TH ST	NE 12TH AV	NE 15TH AV
NE 167TH ST	NE 10TH AV	NE 12TH AV
NE 10TH AV	NE 167TH ST	NE 185TH ST
NE 167TH ST	N MIAMI BEACH BD	NE 10TH AV
NE 167TH ST	NE 6TH AV	N MIAMI BEACH BD
NE 6TH AV	NE 167TH ST	NE 183RD ST
NE 167TH ST	N MIAMI AV	NE 6TH AV
N MIAMI AV	NE 167TH ST	NE 173RD ST
NW 12TH AV	NW 167TH ST	NW 175TH ST
NW 67TH AV	NW 169TH ST	NW 183RD ST
NW 77TH AV	NW 178TH ST	NW 186TH ST
NW 178TH ST	NW 82ND AV	NW 77TH AV
NW 169TH ST	NW 77TH AV	NW 67TH AV
NE 10TH AV	N MIAMI BEACH BD	NE 167TH ST
N MIAMI BEACH BD	NE 167TH ST	NE 10TH AV
NW 17TH AV	NW 167TH ST	NW 175TH ST
NW 167TH ST	NW 17TH AV	NW 12TH AV
NW 82ND AV	NW 170TH ST	NW 178TH ST
NW 87TH AV	NW 170TH ST	NW 178TH ST
NW 170TH ST	NW 82ND AV	NW 77TH AV
SR 826 EX	NW 22ND AV	NW 17TH AV
NW 22ND AV	SR 826 EX	NW 175TH ST
NW 169TH ST	NW 77TH CT	NW 170TH ST
NW 167TH ST	NW 2ND AV	N MIAMI AV
SR 826 EX	NW 27TH AV	NW 22ND AV
NW 27TH AV	SR 826 EX	NW 175TH ST
NW 12TH AV	NW 167TH ST	SR 826 EX
SR 826 EX	NW 32ND AV	NW 27TH AV
NW 32ND AV	NW 167TH ST	NW 175TH ST
NE 22ND AV	NE 163RD ST	NE 167TH ST
NE 163RD ST	NE 22ND AV	BISCAYNE BD
NW 67TH AV	NW 169TH ST	NW 170TH ST

2025 BICYCLE FACILITIES PLAN
PRIOIRTY IV - UNFUNDED ON-ROAD BYCIYCLE PROJECTS
CATEGORY II[1]

	Limits	
Project or Facility	**From**	**To**
NW 37TH AV	NW 167TH ST	NW 175TH ST
NW 167TH ST	NW 37TH AV	NW 32ND AV
NE 163RD ST	NE 19TH AV	NE 22ND AV
NE 19TH AV	NE 163RD ST	NE 167TH ST
NE 163RD ST	NE 18TH AV	NE 19TH AV
SR 826 EX	NW 167TH ST	NW 22ND AV
NE 163RD ST	NE 16TH AV	NE 18TH AV
NW 167TH ST	NW 42ND AV	NW 37TH AV
NW 42ND AV	NW 167TH ST	NW 173RD DR
NW 167TH ST	NW 17TH AV	NW 12TH AV
NW 167TH ST	NW 22ND AV	NW 17TH AV
SR 826 EX	NW 27TH AV	NW 22ND AV
SR 826 EX	NW 167TH ST	NW 27TH AV
NE 163RD ST	NE 15TH AV	NE 16TH AV
NE 15TH AV	NE 163RD ST	NE 167TH ST
NW 167TH ST	NW 47TH AV	NW 42ND AV
NW 47TH AV	NW 167TH ST	NW 173RD DR
NE 163RD ST	NE 12TH AV	NE 15TH AV
NE 12TH AV	N MIAMI BEACH BD	NE 167TH ST
N MIAMI BEACH BD	NE 10TH AV	NE 12TH AV
NW 167TH ST	NW 32ND AV	NW 27TH AV
NW 32ND AV	NW 167TH ST	SR 826 EX
NW 167TH ST	NW 52ND AV	NW 47TH AV
NW 52ND AV	NW 167TH ST	NW 173RD DR
NW 2ND AV	NW 6TH AV	NW 167TH ST
NW 37TH AV	NW 167TH ST	SR 826 EX
NW 167TH ST	NW 37TH AV	NW 32ND AV
SR 826 EX	NW 57TH AV	NW 52ND AV
NW 57TH AV	NW 167TH ST	NW 173RD DR
NW 167TH ST	NW 67TH AV	NW 57TH AV
NW 67TH AV	NW 167TH ST	NW 169TH ST
SR 826 EX	NW 42ND AV	NW 37TH AV
NW 42ND AV	SR 826 EX	NW 167TH ST
SR 826 EX	NW 47TH AV	NW 42ND AV
NW 47TH AV	NW 167TH ST	NW 168TH TE
NW 167TH ST	NW 57TH AV	NW 47TH AV
NW 57TH AV	NW 167TH ST	SR 826 EX

2025 BICYCLE FACILITIES PLAN
PRIOIRTY IV - UNFUNDED ON-ROAD BYCIYCLE PROJECTS
CATEGORY II[1]

	Limits	
Project or Facility	**From**	**To**
NW 167TH ST	NW 67TH AV	NW 57TH AV
NW 67TH AV	NW 167TH ST	SR 826 EX
NE 22ND AV	NE 159TH ST	NE 163RD ST
NE 18TH AV	NE 159TH ST	NE 163RD ST
NE 159TH ST	NE 18TH AV	NE 22ND AV
NE 16TH AV	NE 159TH ST	NE 163RD ST
NE 15TH AV	NE 159TH ST	NE 163RD ST
NE 12TH AV	NE 159TH ST	N MIAMI BEACH BD
NE 10TH AV	NE 159TH ST	N MIAMI BEACH BD
NE 6TH AV	NE 159TH ST	NE 167TH ST
N MIAMI AV	NE 159TH ST	NE 167TH ST
NW 2ND AV	NW 159TH ST	NW 6TH AV
NW 67TH AV	N MIAMI LAKEWAY	NW 167TH ST
NW 37TH AV	NW 157TH ST	NW 167TH ST
NW 157TH ST	NW 47TH AV	NW 37TH AV
NW 47TH AV	NW 157TH ST	SR 826 EX
NE 151ST ST	BISCAYNE BD	Bay Vista bd
NW 47TH AV	NW 156TH ST	NW 167TH ST
NE 151ST ST	NE 18TH AV	BISCAYNE BD
W DIXIE HY	NE 151ST ST	NE 159TH ST
NE 18TH AV	NE 151ST ST	NE 159TH ST
NE 151ST ST	NE 16TH AV	NE 18TH AV
NE 16TH AV	NE 151ST ST	NE 159TH ST
NE 12TH AV	NE 151ST ST	NE 159TH ST
NE 151ST ST	NE14th AV	NE 16TH AV
NE 151ST ST	NE 10TH AV	NE 12TH AV
NE 10TH AV	NE 151ST ST	NE 159TH ST
NE 151ST ST	NE 9TH AV	NE 10TH AV
NE 6TH AV	NE 151ST ST	NE 159TH ST
NE 151ST ST	N MIAMI AV	NE 2ND AV
N MIAMI AV	c	NE 159TH ST
NW 151ST ST	NW 6TH AV	NW 2ND AV
NW 6TH AV	NW 151ST ST	NW 2ND AV
NW 151ST ST	NW 7TH AV	NW 6TH AV
NW 77TH CT	MIAMI LAKES DR	NW 169TH ST
NW 154TH ST	NW 82ND AV	NW 77TH CT
NW 82ND AV	NW 162ND ST	NW 170TH ST

2025 BICYCLE FACILITIES PLAN
PRIOIRTY IV - UNFUNDED ON-ROAD BYCIYCLE PROJECTS
CATEGORY II[1]

	Limits	
Project or Facility	**From**	**To**
NW 151ST ST	NW 22ND AV	LINCOLN AV
NW 22ND AV	NW 151ST ST	NW 167TH ST
NW 151ST ST	NW 27TH AV	NW 22ND AV
NW 27TH AV	NW 151ST ST	NW 167TH ST
NW 151ST ST	NW 32ND AV	NW 27TH AV
NW 32ND AV	NW 151ST ST	NW 167TH ST
W DIXIE HY	NE 16TH AV	NE 151ST ST
NE 16TH AV	W DIXIE HY	NE 151ST ST
NW 151ST ST	PERVIZ AV	NW 32ND AV
NW 151ST ST	NW 37TH AV	PERVIZ AV
NW 37TH AV	NW 151ST ST	NW 157TH ST
N MIAMI AV	GRIFFING BD	c
N BISCAYNE RIVER DR	NW 151ST ST	NW 2ND AV
NW 57TH AV	MIAMI LAKES DR	NW 167TH ST
MIAMI LAKES DR	N MIAMI LAKEWAY	NW 57TH AV
N MIAMI AV	S BISCAYNE RIVER DR	GRIFFING BD
S BISCAYNE RIVER DR	N MIAMI AV	NW 151ST ST
NW 22ND AV	ALI BABA AV	NW 151ST ST
MIAMI LAKES DR	NW 67TH AV	N MIAMI LAKEWAY
NW 67TH AV	MIAMI LAKES DR	N MIAMI LAKEWAY
NW 22ND AV	SR 9 EX	ALI BABA AV
NW 22ND AVE	SR 9 EX	SR 9 EX
NW 22ND AVE	SR 9 EX FRONTAGE RD	SR 9 EX
N MIAMI AV	NW 143RD ST	S BISCAYNE RIVER DR
NW 143RD ST	NW 2ND AV	N MIAMI AV
NW 2ND AV	NW 143RD ST	NW 151ST ST
NW 37TH AV	NW 145TH ST	NW 151ST ST
NW 143RD ST	NW 7TH AV	NW 2ND AV
NW 7TH AV	NW 143RD ST	NW 151ST ST
NW 27TH AV	SHARAZAD BD	NW 151ST ST
NW 143RD ST	NW 12TH AV	NW 7TH AV
SOUTH RIVER DR	NW 16TH AV	NW 151ST ST
SHARAZAD BD	OPA LOCKA BD	NW 27TH AV
ALI BABA AV	NW 27TH AV	NW 22ND AV
NW 27TH AV	ALI BABA AV	SHARAZAD BD
SHARAZAD BD	PERVIZ AV	OPA LOCKA BD
PERVIZ AV	SHARAZAD BD	NW 151ST ST

2025 BICYCLE FACILITIES PLAN
PRIOIRTY IV - UNFUNDED ON-ROAD BYCIYCLE PROJECTS
CATEGORY II[1]

	Limits	
Project or Facility	**From**	**To**
W DIXIE HY	NE 12TH AV	NE 16TH AV
NE 12TH AV	W DIXIE HY	NE 151ST ST
S MIAMI LAKEWAY	NW 67TH AV	MIAMI LAKES DR
NW 67TH AV	S MIAMI LAKEWAY	MIAMI LAKES DR
NW 145TH ST	NW 42ND AV	NW 41ST AV
NW 37TH AV	LANGLEY RD	NW 145TH ST
S MIAMI LAKEWAY	MIAMI LAKES DR	NW 67TH AV
NW 144TH ST	NW 42ND AV	NW 37TH AV
SR 9 EX	N BURLINGTON ST	NW 22ND AV
SR 9 EX	SR 9 EX	NW 22ND AV
SR 9 EX FRONTAGE RD	SR 9 EX	SR 9 EX
SR 9 EX	N BURLINGTON ST	NW 22ND AV
NW 27TH AV	SR 9 EX	ALI BABA AV
ALI BABA AV	OPA LOCKA BD	NW 27TH AV
OPA LOCKA BD	ALI BABA AV	SHARAZAD BD
SR 9 EX	NW 27TH AV	N BURLINGTON ST
NE 16TH AV	NE 135TH ST	W DIXIE HY
ALI BABA AV	SHARAZAD BD	OPA LOCKA BD
SHARAZAD BD	ALI BABA AV	PERVIZ AV
NE 135TH ST	NE 16TH AV	BISCAYNE BD
NE 135TH ST	BISCAYNE BD	UNNAMED
NE 135TH ST	NE 12TH AV	NE 16TH AV
NE 12TH AV	NE 135TH ST	W DIXIE HY
NE 135TH ST	NE 10TH AV	NE 12TH AV
W DIXIE HY	NE 135TH ST	NE 12TH AV
NE 10TH AV	NE 135TH ST	NE 151ST ST
NW 7TH AV	OPA LOCKA BD	NW 143RD ST
OPA LOCKA BD	NW 7TH AV	I 95 EX
OPA LOCKA BD	I 95 EX	NW 6TH AV
NE 135TH ST	NE 6TH AV	NE 10TH AV
NE 6TH AV	NE 135TH ST	NE 151ST ST
OPA LOCKA BD	NW 12TH AV	NW 7TH AV
NE 135TH ST	GRIFFING BD	NE 6TH AV
OPA LOCKA BD	NW 17TH AV	NW 12TH AV
NE 135TH ST	N MIAMI AV	GRIFFING BD
N MIAMI AV	NE 135TH ST	NW 143RD ST
NW 135TH ST	NW 2ND AV	N MIAMI AV

2025 BICYCLE FACILITIES PLAN
PRIOIRTY IV - UNFUNDED ON-ROAD BYCIYCLE PROJECTS
CATEGORY II[1]

	Limits	
Project or Facility	**From**	**To**
NW 2ND AV	NW 135TH ST	NW 143RD ST
OPA LOCKA BD	NW 6TH AV	NW 2ND AV
NW 67TH AV	W 84TH ST	S MIAMI LAKEWAY
W 84TH ST	NW 67TH AV	W 8TH AV
NW 57TH AV	NW 135TH ST	MIAMI LAKES DR
W 84TH ST	W 8TH AV	NW 57TH AV
ALI BABA AV	NW 37TH AV	SHARAZAD BD
NW 37TH AV	ALI BABA AV	NW 144TH ST
NW 7TH AV	NW 135TH ST	OPA LOCKA BD
NW 135TH ST	NW 6TH AV	NW 2ND AV
NW 6TH AV	NW 135TH ST	OPA LOCKA BD
OPA LOCKA BD	NW 22ND AV	NW 19TH AV
NW 22ND AV	OPA LOCKA BD	SR 9 EX
NW 135TH ST	I 95 EX	NW 6TH AV
I 95 EX	NW 135TH ST	OPA LOCKA BD
NW 135TH ST	NW 7TH AV	I 95 EX
NW 97TH AV	NW 138TH ST	NW 146TH ST
NW 135TH ST	NW 12TH AV	NW 7TH AV
NW 12TH AV	NW 135TH ST	OPA LOCKA BD
OPA LOCKA BD	NW 27TH AV	NW 22ND AV
NW 27TH AV	OPA LOCKA BD	SR 9 EX
OPA LOCKA BD	ALI BABA AV	NW 27TH AV
W 84TH ST	W 16TH AV	NW 67TH AV
NW 135TH ST	NW 17TH AV	NW 12TH AV
NW 135TH ST	NW 22ND AV	NW 17TH AV
NW 22ND AV	NW 135TH ST	OPA LOCKA BD
NW 135TH ST	NW 27TH AV	NW 22ND AV
NW 27TH AV	NW 135TH ST	OPA LOCKA BD
NW 135TH ST	OPA LOCKA BD	NW 27TH AV
OPA LOCKA BD	NW 135TH ST	NW 27TH AV
NW 135TH ST	NW 32ND AV	OPA LOCKA BD
DOUGLAS RDET	NW 135TH ST	NW 37TH AV
NW 135TH ST	DOUGLAS RDET	NW 32ND AV
W 84TH ST	NW 97TH AV	NW 92ND AV
NW 135TH ST	NW 42ND AV	DOUGLAS RDET
NW 42ND AV	NW 135TH ST	NW 144TH ST
NW 135TH ST	NW 47TH AV	NW 42ND AV

2025 BICYCLE FACILITIES PLAN
PRIOIRTY IV - UNFUNDED ON-ROAD BYCIYCLE PROJECTS
CATEGORY II[1]

	Limits	
Project or Facility	**From**	**To**
W OKEECHOBEE RD	W 84TH ST	NW 138TH ST
NW 97TH AV	W 20TH AV	W 16TH AV
NW 87TH AV	W 84TH ST	NW 154TH ST
NW 97TH AV	NW 92ND AV	NW 87TH AV
W 16TH AV	W 76TH ST	NW 97TH AV
W 12TH AV	W 76TH ST	W 84TH ST
W 76TH ST	W 16TH AV	W 12TH AV
W 76TH ST	W 24TH AV	W 20TH ST
NW 7TH AV	NW 127TH ST	NW 135TH ST
NE 12TH AV	NE 125TH ST	NE 135TH ST
W 28TH AV	W 76TH ST	NW 97TH AV
W 76TH ST	W 28TH AV	W 24TH AV
W 76TH ST	NW 92ND AV	W 28TH AV
NW 92ND AV	W 76TH ST	NW 97TH AV
W DIXIE HY	NE 6TH AV	NE 135TH ST
NE 6TH AV	W DIXIE HY	NE 135TH ST
NE 125TH ST	NE 10TH AV	NE 12TH AV
NE 10TH AV	NE 125TH ST	NE 135TH ST
NW 127TH ST	NW 12TH AV	NW 7TH AV
NW 12TH AV	NW 127TH ST	NW 135TH ST
NW 170TH AV	OKEECHOBEE FRONTAGE	NW 138TH ST
NE 125TH ST	NE 6TH AV	NE 10TH AV
W DIXIE HY	NE 125TH ST	NE 6TH AV
W DIXIE HY	NE 125TH ST	NE 6TH AV
NW 127TH ST	NW 17TH AV	NW 12TH AV
NE 125TH ST	GRIFFING BD	W DIXIE HY
NW 127TH ST	NW 22ND AV	NW 17TH AV
NW 22ND AV	NW 127TH ST	NW 135TH ST
NE 125TH ST	N MIAMI AV	NE 2ND AV
N MIAMI AV	NE 125TH ST	NE 135TH ST
NE 123RD ST	NE 122ND RD	SANS SOUCI BD
NW 125TH ST	NW 2ND AV	N MIAMI AV
NW 2ND AV	NW 125TH ST	NW 135TH ST
NE 123RD ST	NE 16TH AV	BISCAYNE BD
NE 16TH AV	NE 123RD ST	NE 135TH ST
NE 125TH ST	NE 12TH AV	NE 16TH AV
NW 125TH ST	NW 7TH AV	NW 2ND AV

2025 BICYCLE FACILITIES PLAN
PRIOIRTY IV - UNFUNDED ON-ROAD BYCIYCLE PROJECTS
CATEGORY II[1]

	Limits	
Project or Facility	**From**	**To**
NW 7TH AV	NW 125TH ST	NW 127TH ST
NW 125TH ST	NW 11TH AV	NW 7TH AV
HARDING AV	96TH ST	COLLINS AV
W DIXIE HY	GRIFFING BD	NE 125TH ST
GRIFFING BD	W DIXIE HY	NE 125TH ST
NW 170TH AV	NW 134TH ST	W OKEECHOBEE RD
W DIXIE HY	NW 119TH ST	GRIFFING BD
NW 119TH ST	NE 2ND AV	W DIXIE HY
NW 119TH ST	N MIAMI AV	NE 2ND AV
N MIAMI AV	NW 119TH ST	NE 125TH ST
NW 119TH ST	NW 2ND AV	N MIAMI AV
NW 2ND AV	NW 119TH ST	NW 125TH ST
W 4TH AV	W 2ND CT	NW 135TH ST
W 8TH AV	W 68TH ST	W 84TH ST
W 16TH AV	W 68TH ST	W 76TH ST
W 12TH AV	W 68TH ST	W 76TH ST
NW 119TH ST	NW 7TH AV	NW 2ND AV
NW 7TH AV	NW 119TH ST	NW 125TH ST
W 24TH AV	W 68TH ST	W 76TH ST
W 68TH ST	W 28TH AV	W 24TH AV
W 28TH AV	NW 122ND ST	W 76TH ST
NW 92ND AV	NW 122ND ST	W 76TH ST
NW 122ND ST	NW 97TH AV	NW 92ND AV
NW 97TH AV	NW 122ND ST	W 84TH ST
NW 122ND ST	NW 92ND AV	W 28TH AV
W DIXIE HY	NE 2ND AV	NW 119TH ST
NW 122ND ST	OKEECHOBEE FRONTAGE	NW 97TH AV
W OKEECHOBEE FRONTAGE R	NW 170TH AV	NW 122ND ST
NW 119TH ST	NW 12TH AV	NW 7TH AV
NW 12TH AV	NW 119TH ST	NW 127TH ST
NE 16TH AV	BISCAYNE BD	NE 123RD ST
NW 119TH ST	NW 17TH AV	NW 12TH AV
NW 119TH ST	NW 22ND AV	NW 17TH AV
NW 22ND AV	NW 119TH ST	NW 127TH ST
NW 119TH ST	NW 27TH AV	NW 22ND AV
NW 27TH AV	NW 119TH ST	NW 135TH ST
NW 119TH ST	NW 32ND AV	NW 27TH AV

2025 BICYCLE FACILITIES PLAN
PRIOIRTY IV - UNFUNDED ON-ROAD BYCIYCLE PROJECTS
CATEGORY II[1]

	Limits	
Project or Facility	**From**	**To**
NW 32ND AV	E 65TH ST	NW 135TH ST
DOUGLAS RDET	E 65TH ST	NW 135TH ST
E 65TH ST	E 8TH AV	DOUGLAS RDET
NW 42ND AV	E 65TH ST	NW 135TH ST
E 65TH ST	E 4TH AV	E 8TH AV
E 65TH ST	PALM AV	E 4TH AV
W 65TH ST	W 2ND CT	PALM AV
W 2ND CT	W 4TH AV	W 65TH ST
W 65TH ST	W 4TH AV	W 2ND CT
W 4TH AV	NW 119TH ST	W 2ND CT
W 65TH DR	W 68TH ST	NW 119TH ST
NE 6TH AV	GRIFFING BD	NE 125TH ST
GRIFFING BD	NE 6TH AV	W DIXIE HY
NW 92ND AV	OKEECHOBEE FRONTAGE	NW 122ND ST
OKEECHOBEE FRONTAGE	NW 122ND ST	NW 92ND AV
W OKEECHOBEE RD	NW 116TH WY	OKEECHOBEE FRONTAGE
HARDING AV	94TH ST	96TH ST
91ST ST	HARDING AV	COLLINS AV
NW 116TH WY	NW SOUTH RIVER DR	W OKEECHOBEE RD
NE 6TH AV	NW 111TH ST	GRIFFING BD
NW 111TH ST	NE 2ND AV	NE 6TH AV
NW 111TH ST	N MIAMI AV	NE 2ND AV
N MIAMI AV	NW 111TH ST	NW 119TH ST
NW 111TH ST	NW 2ND AV	N MIAMI AV
NW 2ND AV	NW 111TH ST	NW 119TH ST
W 8TH AV	NW 114TH ST	W 68TH ST
W 4TH AV	NW 114TH ST	NW 119TH ST
W 60TH ST	W 12TH AV	NW 114TH ST
NW 114TH ST	W 8TH AV	W 4TH AV
W 16TH AV	W 60TH ST	W 68TH ST
W 60TH ST	W 20TH AV	W 16TH AV
NW 111TH ST	NW 7TH AV	NW 2ND AV
NW 7TH AV	NW 111TH ST	NW 119TH ST
W 60TH ST	W 24TH AV	W 21ST CR
W 28TH AV	W 60TH ST	NW 122ND ST
W 60TH ST	W 28TH AV	W 24TH AV
DOUGLAS RDET	E 8TH AV	E 65TH ST

2025 BICYCLE FACILITIES PLAN
PRIOIRTY IV - UNFUNDED ON-ROAD BYCIYCLE PROJECTS
CATEGORY II[1]

	Limits	
Project or Facility	**From**	**To**
E 8TH AV	DOUGLAS RDET	E 65TH ST
NW 111TH ST	NW 12TH AV	NW 7TH AV
NW 12TH AV	NW 111TH ST	NW 119TH ST
NW 111TH ST	NW 17TH AV	NW 12TH AV
NW 111TH ST	NW 22ND AV	NW 17TH AV
NW 22ND AV	NW 111TH ST	NW 119TH ST
NE 108TH ST	NE 9TH AV	BISCAYNE BD
NE 9TH AV	GRIFFING BD	NE 121ST ST
GRIFFING BD	NE 6TH AV	NE 9TH AV
E 8TH AV	E 53RD ST	DOUGLAS RDET
E 53RD ST	E 4TH AV	E 8TH AV
E 4TH AV	E 53RD ST	E 65TH ST
PALM AV	E 53RD ST	E 65TH ST
W 4TH AV	W 53RD ST	NW 114TH ST
NE 6TH AV	NE 103RD ST	NW 111TH ST
85TH ST	HARDING AV	COLLINS AV
HARDING AV	COLLINS AV	91ST ST
W 53RD ST	W 8TH AV	W 4TH AV
W 8TH AV	W 53RD ST	NW 114TH ST
W 16TH AV	W 53RD ST	W 60TH ST
W 53RD ST	W 12TH AV	W 8TH AV
N MIAMI AV	NE 103RD ST	NW 111TH ST
NW 2ND AV	NW 103RD ST	NW 111TH ST
NW 7TH AV	NW 103RD ST	NW 111TH ST
NW SOUTH RIVER DR	NW 116TH WY	NW 106TH ST
NW 106TH ST	NW 116TH WY	NW SOUTH RIVER DR
NW 116TH WY	NW 106TH ST	NW SOUTH RIVER DR
NW 12TH AV	NW 103RD ST	NW 111TH ST
NW 22ND AV	NW 103RD ST	NW 111TH ST
NW 27TH AV	NW 103RD ST	NW 119TH ST
W OKEECHOBEE RD	NW 116TH WY	NW 166TH WY
W 28TH AV	NW 103RD ST	W 60TH ST
NW 32ND AV	NW 103RD ST	E 65TH ST
W OKEECHOBEE RD	NW SOUTH RIVER DR	W OKEECHOBEE RD
NW SOUTH RIVER DR	NW 106TH ST	W OKEECHOBEE RD
NE 6TH AV	GRAND CONCOURSE AVE	NE 103RD ST
E 8TH AV	E 49TH ST	E 53RD ST

2025 BICYCLE FACILITIES PLAN
PRIOIRTY IV - UNFUNDED ON-ROAD BYCIYCLE PROJECTS
CATEGORY II[1]

	Limits	
Project or Facility	**From**	**To**
E 4TH AV	E 49TH ST	E 53RD ST
PALM AV	E 49TH ST	E 53RD ST
NW 103RD ST	W OKEECHOBEE RD	W 28TH AV
W OKEECHOBEE RD	NW 103RD ST	W OKECCHOBEE RD
W 4TH AV	W 49TH ST	W 53RD ST
W 8TH AV	W 49TH ST	W 53RD ST
W 16TH AV	W 49TH ST	W 53RD ST
NE 96TH ST	NE 6TH AV	BISCAYNE BD
NE 6TH AV	NE 96TH ST	GRAND CONCOURSE AVE
NE 96TH ST	GRAND CONCOURSE AVE	NE 6TH AV
GRAND CONCOURSE AVE	NE 96TH ST	NE 6TH AV
NE 96TH ST	NE 2ND AV	GRAND CONCOURSE AVE
NE 96TH ST	N MIAMI AV	NE 2ND AV
N MIAMI AV	NE 96TH ST	NE 103RD ST
NW 96TH ST	NW 2ND AV	N MIAMI AV
NW 2ND AV	NW 96TH ST	NW 103RD ST
NE 10TH AV	NE 95TH ST	BISCAYNE BD
NE 95TH ST	NE 9TH AV	NE 10TH AV
NE 6TH AV	NE 95TH ST	NE 96TH ST
77TH ST	HARDING AV	COLLINS AV
HARDING AV	77TH ST	COLLINS AV
NE 95TH ST	GRAND CONCOURSE AVE	NE 6TH AV
GRAND CONCOURSE AVE	NE 95TH ST	NE 96TH ST
NE 95TH ST	NE 2ND AV	GRAND CONCOURSE AVE
NE 95TH ST	N MIAMI AV	NE 2ND AV
N MIAMI AV	NE 95TH ST	NE 96TH ST
S BISCAYNE PT RD	HAWTHORNE AV	HARDING AV
W 8TH AV	W 44TH PL	W 49TH ST
NW 95TH ST	NW 2ND AV	N MIAMI AV
NW 2ND AV	NW 95TH ST	NW 96TH ST
W 44TH PL	W 12TH AV	W 8TH AV
W 12TH AV	W 44TH PL	W 49TH ST
W 44TH PL	W 16TH AV	W 12TH AV
W 16TH AV	W 44TH PL	W 49TH ST
W 44TH PL	W 18TH AV	W 16TH AV
NW 95TH ST	NW 7TH AV	NW 2ND AV
NW 7TH AV	NW 95TH ST	NW 103RD ST

2025 BICYCLE FACILITIES PLAN
PRIOIRTY IV - UNFUNDED ON-ROAD BYCIYCLE PROJECTS
CATEGORY II[1]

	Limits	
Project or Facility	**From**	**To**
NW 12TH AV	NW 99TH ST	NW 103RD ST
NW 22ND AV	NW 95TH ST	NW 103RD ST
NW 27TH AV	NW 95TH ST	NW 103RD ST
GRAND CONCOURSE AVE	NE 2ND AV	NE 95TH ST
NW 95TH ST	NW 32ND AV	NW 27TH AV
NW 32ND AV	NW 95TH ST	NW 103RD ST
E 8TH AV	E 40TH ST	E 49TH ST
E 40TH ST	E 4TH AV	E 8TH AV
E 4TH AV	E 40TH ST	E 49TH ST
E 40TH ST	PALM AV	E 4TH AV
PALM AV	E 40TH ST	E 49TH ST
W 40TH ST	W 4TH AV	PALM AV
NE 6TH AV	BISCAYNE BD	NE 95TH ST
HARDING AV	ABBOTT AV	77TH ST
W 12TH AV	W 37TH ST	W 44TH PL
W 37TH ST	W 8TH AV	W 4TH AV
W 8TH AV	W 37TH ST	W 44TH PL
NE 87TH ST	N MIAMI AV	NE 2ND AV
N MIAMI AV	NE 87TH ST	NE 95TH ST
W 37TH ST	W 12TH AV	W 8TH AV
W 37TH ST	W 16TH AV	W 12TH AV
W 16TH AV	W 37TH ST	W 44TH PL
W 37TH ST	W 18TH AV	W 16TH AV
W 18TH AV	W 37TH ST	W 44TH PL
71ST ST	RUE NOTRE DANE	BAY DR
RUE NOTRE DAME	71ST ST	NORMANDY DR
NW 2ND AV	NW 86TH ST	NW 95TH ST
NW 87TH ST	NW 22ND AV	NW 17TH AV
NW 22ND AV	NW 87TH ST	NW 95TH ST
NW 87TH ST	NW 27TH AV	NW 22ND AV
NW 87TH ST	NW 32ND AV	NW 27TH AV
NW 32ND AV	NW 87TH ST	NW 95TH ST
ABBOTT AV	INDIAN CREEK DR	71ST ST
INDIAN CREEK DR	ABBOTT AV	71ST ST
71ST ST	NORMANDY DR	RUE NOTRE DANE
TROUVILLE ESPLANADE	71ST ST	NORMANDY DR
71ST ST	NORMANDY ST	TROUVILLE ESPLANADE

2025 BICYCLE FACILITIES PLAN
PRIOIRTY IV - UNFUNDED ON-ROAD BYCIYCLE PROJECTS
CATEGORY II[1]

	Limits	
Project or Facility	**From**	**To**
E 10TH AV	E 33RD ST	E 40TH ST
E 33RD ST	E 8TH AV	E 10TH AV
E 8TH AV	E 33RD ST	E 40TH ST
E 33RD ST	E 4TH AV	E 8TH AV
E 4TH AV	E 33RD ST	E 40TH ST
67TH ST	INDIAN CREEK DR	COLLINS AV
INDIAN CREEK DR	67TH ST	ABBOTT AV
PALM AV	E 33RD ST	E 40TH ST
W 33RD ST	W 4TH AV	PALM AV
W 18TH AV	W OKEECHOBEE RD	W 37TH ST
NE 82ND ST	BISCAYNE BD	NE 10TH AV
NE 82ND ST	NE 2ND AV	BISCAYNE BD
NE 82ND ST	N MIAMI AV	NE 2ND AV
N MIAMI AV	NE 82ND ST	NE 87TH ST
NW 82ND ST	NW 1ST PL	N MIAMI AV
NW 1ST PL	NW 82ND ST	NW 83RD ST
NW 82ND ST	NW 4TH AV	NW 1ST PL
NW 81ST ST	NW 5TH CT	NW 4TH AV
NW 7TH AV	NW 81ST ST	NW 95TH ST
NW 81ST ST	NW 6TH CT	NW 5TH CT
NW 81ST ST	NW 7TH AV	NW 6TH CT
NW 81ST ST	NW 10TH AV	NW 7TH AV
NW 81ST ST	NW 12TH AV	NW 10TH AV
NE 10TH AV	NE 79TH ST	NE 82ND ST
PALM AV	W 29TH ST	E 33RD ST
NE 79TH ST	NE 2ND AV	BISCAYNE BD
W 16TH AV	W 29TH ST	W 37TH ST
W 29TH ST	W 4TH AV	PALM AV
W 8TH AV	W 29TH ST	W 37TH ST
W 29TH ST	W 8TH AV	W 4TH AV
W 29TH ST	W 12TH AV	W 8TH AV
W 12TH AV	W 29TH ST	W 37TH ST
W 29TH ST	W 16TH AV	W 12TH AV
NE 79TH ST	N MIAMI AV	NE 2ND AV
N MIAMI AV	NE 79TH ST	NE 82ND ST
NW 79TH ST	NW 1ST PL	N MIAMI AV
NW 1ST PL	NW 79TH ST	NW 82ND ST

2025 BICYCLE FACILITIES PLAN
PRIOIRTY IV - UNFUNDED ON-ROAD BYCIYCLE PROJECTS
CATEGORY II[1]

	Limits	
Project or Facility	**From**	**To**
NW 79TH ST	NW 2ND AV	NW 1ST PL
NW 79TH ST	NW 4TH AV	NW 2ND AV
NW 4TH AV	NW 79TH ST	NW 81ST ST
W 16TH AVE	W OKEECHOBEE RD	W 29TH ST
W OKEECHOBEE RD	NW 103RD ST	W 18TH AV
NW 79TH ST	NW 5TH CT	NW 4TH AV
NW 5TH CT	NW 79TH ST	NW 81ST ST
NW 7TH AV	NW 79TH ST	NW 81ST ST
NW 79TH ST	NW 6TH CT	NW 5TH CT
NW 6TH CT	NW 79TH ST	NW 81ST ST
NW 79TH ST	NW 7TH AV	NW 6TH CT
NW 10TH AV	NW 79TH ST	NW 81ST ST
NW 12TH AV	NW 79TH ST	NW 81ST ST
NW 81ST STRD	NW 79TH ST	NW 12TH AV
NW 22ND AV	NW 79TH ST	NW 87TH ST
NW 32ND AV	NW 79TH ST	NW 87TH ST
NW 36TH AV	NW 81ST ST	NW 87TH ST
E 10TH AV	E 25TH ST	E 33RD ST
E 8TH AV	E 25TH ST	E 33RD ST
63RD ST	INDIAN CREEK DR	COLLINS AV
INDIAN CREEK DR	63RD ST	67TH ST
E 25TH ST	E 6TH AV	E 8TH AV
E 4TH AV	E 25TH ST	E 33RD ST
63RD ST	PINE TREE DR	INDIAN CREEK DR
63RD ST	ALTON RD	PINE TREE DR
INDIAN CREEK DR	COLLINS AV	63RD ST
E 22ND ST	E 4TH AV	E 8TH AV
E 4TH AV	E 22ND ST	E 25TH ST
PALM AV	W 22ND ST	W 29TH ST
W 12TH AV	W OKEECHOBEE RD	W 29TH ST
W 8TH AV	HIALEAH EX	W 29TH ST
NW SOUTH RIVER DR	NW 74TH ST	W OKEECHOBEE RD
E 21ST ST	E 4TH AV	E 8TH AV
E 4TH AV	E 21ST ST	E 22ND ST
W 8TH AV	W 21ST ST	HIALEAH EX
E 21ST ST	E 1ST AV	E 4TH AV
E 1ST AV	E 21ST ST	N OF E 21ST ST

2025 BICYCLE FACILITIES PLAN
PRIOIRTY IV - UNFUNDED ON-ROAD BYCIYCLE PROJECTS
CATEGORY II[1]

	Limits	
Project or Facility	**From**	**To**
E 21ST ST	PALM AV	E 1ST AV
PALM AV	E 21ST ST	W 22ND ST
N MIAMI AV	NE 71ST ST	NE 79TH ST
NW 74TH ST	NW 72ND AV	NW SOUTH RIVER DR
NE 71ST ST	NE 2ND AV	BISCAYNE BD
NE 71ST ST	N MIAMI AV	NE 2ND AV
NW 74TH ST	NW 87TH AV	NW 84TH AV
NW 71ST ST	NW 2ND AV	N MIAMI AV
NW 2ND AV	NW 71ST ST	NW 79TH ST
NW 71ST ST	NW 7TH AV	NW 2ND AV
NW 71ST ST	NW 12TH AV	NW 7TH AV
NW 12TH AV	NW 73RD ST	NW 79TH ST
NW 74TH ST	NW 84TH AV	HIALEAH EX
NW 71ST ST	NW 17TH AV	NW 12TH AV
NW 71ST ST	NW 19TH AV	NW 17TH AV
NW 71ST TE	NW 22ND AV	NW 19TH AV
NW 22ND AV	NW 71ST TE	NW 72ND ST
NW 71ST ST	NW 32ND AV	NW 27TH AV
NW 32ND AV	NW 71ST ST	NW 79TH ST
NW 71ST ST	NW 37TH AV	NW 32ND AV
NW 37TH AV	NW 71ST ST	NW 79TH ST
E 17TH ST	E 8TH AV	NW 71ST ST
E 17TH ST	E 4TH AV	E 8TH AV
E 4TH AV	E 17TH ST	E 21ST ST
PINE TREE DR	W 57TH ST	63RD ST
E 17TH ST	E 1ST AV	E 4TH AV
E 1ST AV	E 17TH ST	E 21ST ST
W 57TH ST	LA GORCE DR	PINE TREE DR
LA GORCE DR	W 57TH ST	63RD ST
E 17TH ST	PALM AV	E 1ST AV
PALM AV	E 17TH ST	E 21ST ST
W 17TH ST	W 4TH AV	PALM AV
W 8TH AV	W OKEECHOBEE RD	HIALEAH EX
NE 62ND ST	NE 4TH CT	BISCAYNE BD
NE 62ND ST	NE 2ND AV	NE 4TH CT
NE 61ST ST	NE 4TH CT	BISCAYNE BD
NE 62ND ST	N MIAMI AV	NE 2ND AV

2025 BICYCLE FACILITIES PLAN
PRIOIRTY IV - UNFUNDED ON-ROAD BYCIYCLE PROJECTS
CATEGORY II[1]

	Limits	
Project or Facility	**From**	**To**
N MIAMI AV	NE 62ND ST	NE 71ST ST
NW 2ND AV	NW 62ND ST	NW 71ST ST
NE 61ST ST	NE 2ND AV	NE 4TH CT
NW 12TH AV	NW 62ND ST	NW 71ST ST
NW 32ND AV	NW 62ND ST	NW 71ST ST
NW 37TH AV	NW 62ND ST	NW 71ST ST
E 4TH AV	E 9TH ST	E 17TH ST
E 1ST AV	E 9TH ST	E 17TH ST
PALM AV	E 9TH ST	E 17TH ST
W OKEECHOBEE RD	W OKEECHOBEE RD	W 9TH ST
PINE TREE DR	W 51ST ST	W 57TH ST
LA GORCE DR	W 51ST ST	W 57TH ST
W 51ST ST	ALTON RD	LA GORCE DR
ALTON RD	W 51ST ST	63RD ST
E 1ST AV	E 5TH ST	E 9TH ST
E 5TH ST	PALM AV	E 1ST AV
NW 97TH AV	NW 58TH ST	NW 70TH ST
NW 84TH AV	NW 58TH ST	NW 74TH ST
NW 58TH ST	NW 87TH AV	NW 84TH AV
NW 58TH ST	NW 97TH AV	NW 87TH AV
NE 54TH ST	N FEDERAL HY	BISCAYNE BD
NW 58TH ST	NW 79TH AV	NW 74TH AV
NE 54TH ST	NE 2ND AV	N FEDERAL HY
NW 58TH ST	NW 84TH AV	NW 79TH AV
NW 58TH ST	NW 102ND AV	NW 97TH AV
N MIAMI AV	NE 54TH ST	NE 62ND ST
NE 54TH ST	N MIAMI AV	NE 2ND AV
NW 58TH ST	NW 122ND AV	NW 117TH AV
NW 54TH ST	NW 2ND AV	N MIAMI AV
NW 2ND AV	NW 54TH ST	NW 62ND ST
NW 58TH ST	NW 107TH AV	NW 102ND AV
NW 58TH ST	NW 117TH AV	NW 107TH AV
NW 54TH ST	NW 6TH AV	NW 2ND AV
NW 6TH AV	NW 54TH ST	NW 62ND ST
NW 54TH ST	NW 7TH AV	NW 6TH AV
NW 54TH ST	NW 12TH AV	NW 7TH AV
NW 12TH AV	NW 54TH ST	NW 62ND ST

2025 BICYCLE FACILITIES PLAN
PRIOIRTY IV - UNFUNDED ON-ROAD BYCIYCLE PROJECTS
CATEGORY II[1]

	Limits	
Project or Facility	**From**	**To**
NW 54TH ST	NW 17TH AV	NW 12TH AV
NW 54TH ST	NW 22ND AV	NW 17TH AV
NW 54TH ST	NW 27TH AV	NW 22ND AV
NW 54TH ST	NW 32ND AV	NW 27TH AV
NW 32ND AV	NW 54TH ST	NW 62ND ST
ALTON RD	W 47TH ST	W 51ST ST
NW 54TH ST	NW 37TH AV	NW 32ND AV
NW 37TH AV	NW 54TH ST	NW 62ND ST
HIALEAH DR	E 8TH AV	NW 54TH ST
E 8TH AV	HIALEAH DR	E 9TH ST
HIALEAH DR	E 4TH AV	E 8TH AV
E 4TH AV	HIALEAH DR	E 9TH ST
PINE TREE DR	W 47TH ST	W 51ST ST
HIALEAH DR	E 1ST AV	E 4TH AV
E 1ST AV	HIALEAH DR	E 5TH ST
HIALEAH DR	CURTISS PY	E 1ST AV
W 47TH ST	ALTON RD	PRAIRIE AV
E 1ST AV	E OKEECHOBEE RD	HIALEAH DR
N ROYAL POINCIANA BD	CURTISS DR	DOVE AV
CURTISS PY	CURTISS PY RNDABT	E OKEECHOBEE RD
CURTISS PY RNDABT	N ROYAL POINCIANA BD	CURTISS PY
CURTISS PY RNDABT	WESTWARD DR	N ROYAL POINCIANA BD
NW 107TH AV	NW 52ND ST	NW 58TH ST
CURTISS PY RNDABT	S ROYAL POINCIANA BD	CURTISS PY
CURTISS PY RNDABT	CURTISS PY	S ROYAL POINCIANA BD
CURTISS PY RNDABT	CURTISS PY	WESTWARD DR
HOOK ST	S ROYAL POINCIANA BD	E OKEECHOBEE RD
S ROYAL POINCIANA BD	CURTISS PY RNDABT	HOOK ST
LUDLAM DR	WESTWARD DR	N ROYAL POINCIANA BD
WESTWARD DR	LENAPE DR	ESPLANADE DR
LENAPE DR	WESTWARD DR	N ROYAL POINCIANA BD
WESTWARD DR	LUDLAM DR	LENAPE DR
NW 102ND AV	NW 52ND ST	NW 58TH ST
NW 97TH AV	NW 52ND ST	NW 58TH ST
NW 52ND ST	NW 102ND AV	NW 97TH AV
NW 52ND ST	NW 107TH AV	NW 102ND AV
NE 46TH ST	N MIAMI AV	NE 2ND AV

2025 BICYCLE FACILITIES PLAN
PRIOIRTY IV - UNFUNDED ON-ROAD BYCIYCLE PROJECTS
CATEGORY II[1]

	Limits	
Project or Facility	**From**	**To**
N MIAMI AV	NE 46TH ST	NE 54TH ST
NW 46TH ST	NW 2ND AV	N MIAMI AV
NW 2ND AV	NW 46TH ST	NW 54TH ST
NW 46TH ST	NW 7TH AV	NW 2ND AV
NW 46TH ST	NW 12TH AV	NW 7TH AV
NW 46TH ST	NW 17TH AV	NW 12TH AV
SE 4TH AV	E OKEECHOBEE RD	HIALEAH DR
NW 46TH ST	NW 22ND AV	NW 17TH AV
NW 46TH ST	NW 27TH AV	NW 22ND AV
NW 46TH ST	NW 32ND AV	NW 27TH AV
NW 32ND AV	NW 46TH ST	NW 54TH ST
NW 46TH ST	NW 37TH AV	NW 32ND AV
NW 37TH AV	NW 46TH ST	NW 54TH ST
SE 8TH ST	SE 8TH AV	NW 46TH ST
SE 8TH AV	SE 8TH ST	HIALEAH DR
EAST DR	S ROYAL POINCIANA BD	E OKEECHOBEE RD
S ROYAL POINCIANA BD	HOOK ST	EAST DR
SE 8TH ST	E OKEECHOBEE RD	SE 8TH AV
PINE TREE DR	ARTHUR GODFREY RD	W 47TH ST
ARTHUR GODFREY RD	PRAIRIE AV	PINE TREE DR
INDIAN CREEK DR	ARTHUR GODFREY RD	COLLINS AV
ARTHUR GODFREY RD	PINE TREE DR	INDIAN CREEK DR
ARTHUR GODFREY RD	INDIAN CREEK DR	COLLINS AV
ARTHUR GODFREY RD	ALTON RD	PRAIRIE AV
ALTON RD	ARTHUR GODFREY RD	W 47TH ST
NW 102ND AV	NW 41ST ST	NW 52ND ST
NW 97TH AV	NW 41ST ST	NW 52ND ST
NW 41ST ST	NW 102ND AV	NW 97TH AV
NW 107TH AV	NW 41ST ST	NW 52ND ST
NW 41ST ST	NW 107TH AV	NW 102ND AV
NW 117TH AV	NW 41ST ST	NW 58TH ST
SE 8TH AV	E OKEECHOBEE RD	SE 8TH ST
NW 41ST ST	NW 117TH AV	NW 107TH AV
NW 41ST ST	NW 137TH AV	NW 117TH AV
N MIAMI AV	NE 36TH ST	NE 46TH ST
NW 2ND AV	NW 36TH ST	NW 46TH ST
INDIAN CREEK DR	W 34TH ST	ARTHUR GODFREY RD

2025 BICYCLE FACILITIES PLAN
PRIOIRTY IV - UNFUNDED ON-ROAD BYCIYCLE PROJECTS
CATEGORY II[1]

	Limits	
Project or Facility	**From**	**To**
W 34TH ST	INDIAN CREEK DR	COLLINS AV
NW 41ST ST	NW 97TH AV	NW 87TH AV
SE 8TH AV	S ROYAL POINCIANA BD	E OKEECHOBEE RD
S ROYAL POINCIANA BD	EAST DR	N LE JEUNE RD
NW 79TH AV	NW 36TH ST	NW 58TH ST
NW 32ND AV	NW 36TH ST	NW 46TH ST
NW 37TH AV	NW 36TH ST	NW 46TH ST
S ROYAL POINCIANA BD	N LE JEUNE RD	NW 36TH ST
N LE JEUNE RD	NW 36TH ST	S ROYAL POINCIANA BD
EAST DR	NW 36TH ST	S ROYAL POINCIANA BD
NW 62ND AV	NW 36TH ST	HUNTING LODGE DR
LUDLAM DR	NW 38TH ST	WESTWARD DR
NW 37TH AV	NW NORTH RIVER DR	NW 36TH ST
BISCAYNE BD	NE 29TH ST	NE 36TH ST
NW 36TH ST	PALMETTO DR	EAST DR
NE 29TH ST	NE 2ND AV	BISCAYNE BD
NE 29TH ST	N MIAMI AV	NE 2ND AV
N MIAMI AV	NE 29TH ST	NE 36TH ST
NW 29TH ST	NW 2ND AV	N MIAMI AV
NW 2ND AV	NW 29TH ST	NW 36TH ST
NW 97TH AV	NW 33RD ST	NW 38TH ST
NW 29TH ST	NW 5TH AV	NW 2ND AV
NW 5TH AV	NW 29TH ST	NW 36TH ST
NW 29TH ST	NW 7TH AV	NW 5TH AV
NW 29TH ST	NW 10TH AV	NW 7TH AV
NW 10TH AV	NW 29TH ST	NW 36TH ST
NW 33RD ST	E OF TORREMOLINOS	NW 97TH AV
NW 107TH AV	NW 33RD ST	NW 41ST ST
NW 29TH ST	NW 12TH AV	NW 10TH AV
NW 29TH ST	NW 14TH AV	NW 12TH AV
NW 14TH AV	NW 29TH ST	NW 36TH ST
NW 29TH ST	NW 17TH AV	NW 14TH AV
INDIAN CREEK DR	COLLINS AV	W 34TH ST
NW 14TH AV	NW 28TH ST	NW 29TH ST
NW 67TH AV	N OF NW 30TH ST	NW 36TH ST
NW 28TH ST	NW 17TH AV	NW 14TH AV
NW 17TH AV	NW 28TH ST	NW 29TH ST

2025 BICYCLE FACILITIES PLAN
PRIOIRTY IV - UNFUNDED ON-ROAD BYCIYCLE PROJECTS
CATEGORY II[1]

	Limits	
Project or Facility	**From**	**To**
NW 28TH ST	NW 22ND AV	NW 17TH AV
NW 28TH ST	NW 27TH AV	NW 22ND AV
NW 27TH AV	NW 28TH ST	NW 36TH ST
NW 28TH ST	NW 32ND AV	NW 27TH AV
NW 32ND AV	NW 28TH ST	NW 36TH ST
NW 28TH ST	NW NORTH RIVER DR	NW 32ND AV
PINE TREE DR	DADE BD	W 26TH ST
NW 32ND AV	NW NORTH RIVER DR	NW 28TH ST
NW SOUTH RIVER DR	NW 25TH ST	NW 28TH ST
W 23RD ST	PINE TREE DR	COLLINS AV
DADE BD	WASHINGTON AV	PINE TREE DR
NW 25TH ST	NW 37TH AV	NW SOUTH RIVER DR
NW 25TH ST	NW 42ND AV	NW 37TH AV
NW SOUTH RIVER DR	NW 25TH ST	NW 33RD AV
10TH ST	NW 67TH AV	NW 64TH AV
NW 67TH AV	NW 25TH ST	N OF NW 29TH ST
NW 25TH ST	MILAM DAIRY RD	NW 67TH AV
NW 25TH ST	NW 79TH AV	MILAM DAIRY RD
NW 79TH AV	NW 25TH ST	NW 36TH ST
DADE BD	MERIDIAN AV	WASHINGTON AV
BISCAYNE BD	NE 20TH TE	NE 29TH ST
NW 25TH ST	NW 82ND AV	NW 79TH AV
NW 82ND AV	NW 25TH ST	NW 36TH ST
NE 20TH TE	NE 2ND AV	BISCAYNE BD
NW 97TH AV	NW 25TH ST	NW 33RD ST
NW 25TH ST	NW 87TH AV	NW 82ND AV
NW 25TH ST	NW 97TH AV	NW 87TH AV
NW 25TH ST	NW 107TH AV	NW 97TH AV
NW 107TH AV	NW 25TH ST	NW 33RD ST
NW 117TH AV	NW 25TH ST	NW 41ST ST
NW 25TH ST	NW 110TH AV	NW 107TH AV
NW 25TH ST	NW 117TH AV	NW 110TH AV
NE 2ND AVE	NE 20TH ST	NE 20TH TE
NE 20TH ST	N MIAMI AV	NE 2ND AV
N MIAMI AV	NE 20TH ST	NE 29TH ST
BISCAYNE BD	NE 19TH TE	NE 20TH TE
NW 20TH ST	NW 1ST AV	N MIAMI AV

2025 BICYCLE FACILITIES PLAN
PRIOIRTY IV - UNFUNDED ON-ROAD BYCIYCLE PROJECTS
CATEGORY II[1]

	Limits	
Project or Facility	**From**	**To**
NW 20TH ST	NW 2ND AV	NW 1ST AV
NW 2ND AV	NW 20TH ST	NW 29TH ST
NW 20TH ST	NW 3RD AV	NW 2ND AV
NE 19TH TE	NE 2ND AV	BISCAYNE BD
NE 2ND ST	NE 19TH TE	NE 20TH ST
NW 20TH ST	NW 7TH AV	NW 3RD AV
NW 20TH ST	NW 9TH AV	NW 7TH AV
NW 10TH AV	NW 20TH ST	NW 29TH ST
NW 20TH ST	NW 12TH AV	NW 9TH AV
NW 20TH ST	NW 14TH AV	NW 12TH AV
NW 14TH AV	NW 20TH ST	NW 28TH ST
NW 21ST ST	NW 37TH AV	NW 33RD AV
NW 20TH ST	NW 17TH AV	NW 14TH AV
NW 21ST ST	NW 42ND AV	NW 37TH AV
NW 21ST ST	PERIMETER RD	PERIMETER RD
NW 20TH ST	NW 22ND AV	NW 17TH AV
NW 20TH ST	NW 25TH AV	NW 22ND AV
NW 27TH AV	NW 20TH ST	NW 28TH ST
NW SOUTH RIVER DR	DELAWARE PY	NW 33RD AV
DADE BD	ALTON RD	MERIDIAN AV
ALTON RD	N MICHIGAN AV	ARTHUR GODFREY RD
WASHINGTON AV	17TH ST	DADE BD
N MIAMI AV	NE 17TH TE	NE 20TH ST
MERIDIAN AV	17TH ST	DADE BD
ALTON RD	17TH ST	DADE BD
DADE BD	17TH ST	ALTON RD
NE 17TH ST	NE 1ST AV	NE 2ND AV
NW 2ND AV	NW 17TH ST	NW 20TH ST
NE 17TH ST	N MIAMI AV	NE 1ST AV
N MIAMI AV	NE 17TH ST	NE 17TH TE
NW 17TH ST	NW 3RD AV	NW 2ND AV
NW 3RD AV	NW 17TH ST	NW 20TH ST
NW 1ST AV	NW 17TH ST	NW 20TH ST
NW 17TH ST	NW 2ND AV	NW 1ST AV
NW 17TH ST	NW 7TH AV	NW 3RD AV
WASHINGTON AV	LINCOLN RD MALL	17TH ST
LINCOLN RD MALL	WASHINGTON AV	COLLINS AV

2025 BICYCLE FACILITIES PLAN
PRIOIRTY IV - UNFUNDED ON-ROAD BYCIYCLE PROJECTS
CATEGORY II[1]

	Limits	
Project or Facility	**From**	**To**
NW 42ND AV	NW 18TH ST	NW 21ST ST
BISCAYNE BD	NE 15TH TE	NE 19TH TE
NE 15TH TE	NE 2ND AV	BISCAYNE BD
NE 2ND AV	NE 15TH TE	NE 17TH ST
DELAWARE PY	NW SOUTH RIVER DR	NW 17TH ST
NW 27TH AV	NW 17TH ST	NW 20TH ST
NW 17TH ST	DELAWARE PY	NW 27TH AV
NW 17TH ST	NW 32ND AV	DELAWARE PY
NW 20TH ST	NW 32ND AV	NW SOUTH RIVER DR
NW 17TH ST	NW 34TH AV	NW 32ND AV
NW 17TH ST	NW 37TH AV	NW 34TH AV
NW 37TH AV	NW 17TH ST	NW 21ST ST
BISCAYNE BD	NE 15TH ST	NE 15TH TE
NE 15TH ST	NE 2ND AV	BISCAYNE BD
NE 2ND AV	NE 15TH ST	NE 15TH TE
NE 15TH ST	NE 1ST AV	NE 2ND AV
NE 1ST AV	NE 15TH ST	NE 17TH ST
NE 15TH ST	N MIAMI AV	NE 1ST AV
N MIAMI AV	NE 15TH ST	NE 17TH ST
NW 14TH AV	NW 15TH STRD	NW 20TH ST
NW 15TH STRD	NW 14TH AV	NW 14TH AV
NW 15TH STRD	NW 17TH AV	NW 14TH AV
NE 1ST AV	NE 14TH ST	NE 15TH ST
NE 2ND AV	NE 14TH ST	NE 15TH ST
NE 14TH ST	NE 1ST AV	NE 2ND AV
BAYSHORE DR	NE 14TH ST	NE 15TH ST
NW 67TH AV	NW 25TH ST	10TH ST
NE 14TH ST	BISCAYNE BD	BAYSHORE DR
NE 14TH ST	N MIAMI AV	NE 1ST AV
NW 14TH ST	N MIAMI AV	N MIAMI AV
NE 14TH ST	NE 2ND AV	BISCAYNE BD
NW 14TH ST	NW 1ST AV	N MIAMI AV
NW 1ST AV	NW 14TH ST	NW 17TH ST
NW 14TH ST	NW 1ST PL	NW 1ST AV
NW 14TH ST	NW 2ND AV	NW 1ST PL
NW 2ND AV	NW 14TH ST	NW 17TH ST
NW 14TH ST	NW 3RD AV	NW 2ND AV

2025 BICYCLE FACILITIES PLAN
PRIOIRTY IV - UNFUNDED ON-ROAD BYCIYCLE PROJECTS
CATEGORY II[1]

	Limits	
Project or Facility	**From**	**To**
NW 3RD AV	NW 14TH ST	NW 17TH ST
WASHINGTON AV	15TH ST	LINCOLN RD MALL
NW 14TH ST	NW 7TH AV	NW 3RD AV
15TH ST	MERIDIAN AV	WASHINGTON AV
NW 14TH ST	NW 9TH AV	NW 7TH AV
NW 9TH AV	NW 14TH ST	NW 19TH ST
NW 14TH AV	NW 14TH ST	NW 15TH STRD
NW 14TH AV	NW 14TH ST	NW 15TH STRD
15TH ST	ALTON RD	MERIDIAN AV
ALTON RD	15TH ST	17TH ST
NW 14TH ST	NW 12TH AV	NW 9TH AV
NW 14TH ST	NW 14TH AV	NW 12TH AV
NW 14TH ST	NW 14TH AV	S OF NW 14 TE
WASHINGTON AV	ESPANOLA WY	15TH ST
ESPANOLA WY	WASHINGTON AV	COLLINS AV
NW 14TH ST	NW 17TH AV	NW 14TH AV
NE 13TH ST	BAYSHORE DR	MAC ARTHUR CY
BAYSHORE DR	NE 13TH ST	NE 14TH ST
NE 13TH ST	BISCAYNE BD	BAYSHORE DR
NE 13TH ST	NE 2ND AV	BISCAYNE BD
NE 2ND AV	NE 13TH ST	NE 14TH ST
NE 13TH ST	NE 1ST AV	NE 2ND AV
NE 1ST AV	NE 13TH ST	NE 14TH ST
NW 14TH ST	NW 27TH AV	NW 22ND AV
NW 14TH ST	NW 32ND AV	NW 27TH AV
NW 32ND AV	NW 14TH ST	NW 17TH ST
NW 14TH ST	NW 34TH AV	NW 32ND AV
NW 34TH AV	NW 14TH ST	NW 17TH ST
NW 14TH ST	SR 836	NW 34TH AV
NW 37TH AV	NW 14TH ST	NW 17TH ST
MAC ARTHUR CY	NE 2ND AV	BISCAYNE BD
NE 2ND AV	I 395 EX	NE 13TH ST
I 395 EX	NE 1ST AV	NE 2ND AV
NE 1ST AV	I 395 EX	NE 13TH ST
NW 14TH ST	NW 42ND AV	NW 37TH AV
NW 42ND AV	NW 14TH ST	NW 18TH ST
NW 14TH ST	NW 42ND CT	NW 42ND AV

2025 BICYCLE FACILITIES PLAN
PRIOIRTY IV - UNFUNDED ON-ROAD BYCIYCLE PROJECTS
CATEGORY II[1]

	Limits	
Project or Facility	**From**	**To**
NW 42ND CT	NW 14TH ST	NW 18TH ST
NW 14TH ST	NW 44TH AV	NW 42ND CT
NW 14TH TE	PERIMETER RD	NW 45TH AV
MAC ARTHUR CY	NE 2ND AV	BISCAYNE BD
NE 2ND AV	MAC ARTHUR CY	I 395 EX
NW 14TH AV	NW 11TH ST	NW 14TH ST
NW 107TH AV	NW 14TH ST	NW 25TH ST
NW 14TH ST	NW 110TH AV	NW 107TH AV
NW 110TH AV	NW 14TH ST	NW 25TH ST
NW 2ND AV	NW 11TH ST	NW 14TH ST
NE 11TH ST	NE 2ND AV	BISCAYNE BD
NE 2ND AV	NE 11TH ST	MAC ARTHUR CY
NE 11TH ST	NE 1ST AV	NE 2ND AV
NE 1ST AV	NE 11TH ST	I 395 EX
NE 11TH ST	N MIAMI AV	NE 1ST AV
N MIAMI AV	NE 11TH ST	NE 14TH ST
NW 11TH ST	NW 1ST AV	N MIAMI AV
NW 11TH ST	NW 1ST AV	NW 1ST AV
NW 1ST AV	NW 11TH ST	NW 14TH ST
NW 11TH ST	NW 2ND AV	NW 1ST AV
NW 11TH TE	NW 11TH ST	N MIAMI AV
NW 11TH ST	NW 3RD AV	NW 2ND AV
NW 3RD AV	NW 11TH ST	NW 14TH ST
NW 11TH ST	NW 5TH AV	NW 3RD AV
NW 57TH AV	SR 836	NW 12TH ST
NW 11TH ST	NW 7TH AV	NW 5TH AV
NW 11TH ST	NW 10TH AV	NW 7TH AV
NW 10TH AV	NW 8TH STRD	NW 14TH ST
NE 10TH ST	NE 2ND AV	BISCAYNE BD
NE 2ND AV	NE 10TH ST	NE 11TH ST
NE 10TH ST	NE 1ST AV	NE 2ND AV
NE 1ST AV	NE 10TH ST	NE 11TH ST
N MIAMI AV	NE 10TH ST	NE 11TH ST
NW 1ST CT	NW 10TH ST	NW 11TH ST
NW 1ST AV	NW 10TH ST	NW 11TH ST
NW 2ND AV	NW 10TH ST	NW 11TH ST
NW 3RD AV	NW 10TH ST	NW 11TH ST

2025 BICYCLE FACILITIES PLAN
PRIOIRTY IV - UNFUNDED ON-ROAD BYCIYCLE PROJECTS
CATEGORY II[1]

	Limits	
Project or Facility	**From**	**To**
NW 5TH AV	NW 10TH ST	NW 11TH ST
NW 107TH AV	NW 12TH ST	NW 14TH ST
NW 57TH AV	STATE RDHY	NW 12TH ST
NW 32ND AV	NW 13TH LA	NW 14TH ST
NW 12TH ST	NW 97TH AV	NW 87TH AV
NW 11TH ST	NW 34TH AV	NW 32ND AV
WASHINGTON AV	11TH ST	ESPANOLA WY
NW 11TH ST	NW 37TH AV	NW 34TH AV
NW 37TH AV	NW 11TH ST	NW 14TH ST
11TH ST	MERIDIAN AV	WASHINGTON AV
MERIDIAN AV	11TH ST	15TH ST
11TH ST	WASHINGTON AV	COLLINS AV
11TH ST	ALTON RD	MERIDIAN AV
ALTON RD	11TH ST	15TH ST
NW 82ND AV	NW 12TH ST	NW 25TH ST
NW 12TH ST	NW 87TH AV	NW 82ND AV
NW 12TH ST	NW 82ND AV	MILAM DAIRY RD
NW 12TH ST	MILAM DAIRY RD	NW 72ND AV
NW 11TH ST	NW 42ND AV	NW 37TH AV
NW 42ND AV	NW 11TH ST	NW 14TH ST
NW 12TH ST	NW 107TH AV	NW 98TH CT
NW 2ND AV	NW 8TH ST	NW 10TH ST
NW 12TH ST	SR 821 HY	NW 11TH AV
NW 117TH AV	S OF NW 25TH ST	NW 25TH ST
NW 8TH ST	NW 3RD AV	NW 2ND AV
NW 3RD AV	NW 8TH ST	NW 10TH ST
NW 8TH ST	NW 3RD CT	NW 3RD AV
NW 12TH ST	NW 132ND AV	NW 127TH AV
NW 12TH ST	NW 127TH AV	SR 821 HY
NW 8TH ST	NW 5TH AV	NW 3RD CT
NW 5TH AV	NW 8TH ST	NW 10TH ST
NW 57TH AV	BLUE LAGOON DR	SR 836
NW 12TH ST	NW 137TH AV	NW 132ND AV
NW 8TH ST	NW 7TH AV	NW 5TH AV
NE 8TH ST	NE 2ND AV	BISCAYNE BD
NE 2ND AV	NE 8TH ST	NE 10TH ST
NE 8TH ST	NE 1ST AV	NE 2ND AV

2025 BICYCLE FACILITIES PLAN
PRIOIRTY IV - UNFUNDED ON-ROAD BYCIYCLE PROJECTS
CATEGORY II[1]

	Limits	
Project or Facility	**From**	**To**
NE 1ST AV	NE 8TH ST	NE 10TH ST
NE 8TH ST	N MIAMI AV	NE 1ST AV
N MIAMI AV	NE 8TH ST	NE 10TH ST
NW 1ST AV	NW 7TH ST	NW 10TH ST
NW 1ST CT	NW 7TH ST	NW 8TH ST
NW 7TH ST	NW 2ND AV	NW 1ST CT
NW 2ND AV	NW 7TH ST	NW 8TH ST
NW 3RD CT	I 95 EX	NW 8TH ST
NW 3RD AV	I 95 EX	NW 8TH ST
I 95 EX	NW 3RD CT	NW 3RD AV
NE 6TH ST	NE 2ND AV	BISCAYNE BD
NE 2ND AV	NE 6TH ST	NE 8TH ST
NE 6TH ST	NE 1ST AV	NE 2ND AV
NE 1ST AV	NE 6TH ST	NE 8TH ST
PORT BD	BISCAYNE BD	PORT BD
NW 1ST AV	NW 6TH ST	NW 7TH ST
NE 6TH ST	N MIAMI AV	NE 1ST AV
N MIAMI AV	NE 6TH ST	NE 8TH ST
NW 6TH ST	NW 1ST AV	N MIAMI AV
NW 6TH ST	NW 1ST CT	NW 1ST AV
NW 1ST CT	NW 6TH ST	NW 7TH ST
NW 6TH ST	NW 2ND AV	NW 1ST CT
NW 2ND AV	NW 6TH ST	NW 7TH ST
NW 6TH ST	NW 3RD AV	NW 2ND AV
NW 3RD AV	NW 6TH ST	I 95 EX
NW 6TH ST	NW 3RD CT	NW 3RD AV
NW 3RD CT	NW 6TH ST	I 95 EX
NW 6TH ST	NW 5TH AV	NW 3RD CT
NW 5TH AV	NW 6TH ST	NW 8TH ST
PORT BD	BISCAYNE BD	PORT BD
BISCAYNE BD	PORT BD	NE 6TH ST
NW 7TH ST	NW 22ND AV	NW 17TH AV
NW 6TH ST	NW 7TH AV	NW 5TH AV
PORT BD	NE 5TH ST	BISCAYNE BD
NE 5TH ST	NE 2ND AV	BISCAYNE BD
NE 2ND AV	NE 5TH ST	NE 6TH ST
NE 5TH ST	NE 1ST AV	NE 2ND AV

2025 BICYCLE FACILITIES PLAN
PRIOIRTY IV - UNFUNDED ON-ROAD BYCIYCLE PROJECTS
CATEGORY II[1]

	Limits	
Project or Facility	**From**	**To**
NE 1ST AV	NE 5TH ST	NE 6TH ST
NE 5TH ST	N MIAMI AV	NE 1ST AV
N MIAMI AV	NE 5TH ST	NE 6TH ST
NW 5TH ST	NW 1ST AV	N MIAMI AV
NW 1ST AV	NW 5TH ST	NW 6TH ST
NW 32ND AV	NW 7TH ST	NW 11TH ST
NW 2ND AV	NW 5TH ST	NW 6TH ST
NW 5TH ST	NW 1ST CT	NW 1ST AV
NW 1ST CT	NW 5TH ST	NW 6TH ST
NW 5TH ST	NW 2ND AV	NW 1ST CT
NW 7TH ST	NW 34TH AV	NW 32ND AV
NW 34TH AV	NW 7TH ST	NW 11TH ST
NW 3RD CT	NW 5TH ST	NW 6TH ST
NW 5TH ST	NW 3RD AV	NW 2ND AV
NW 3RD AV	NW 5TH ST	NW 6TH ST
NW 5TH ST	NW 3RD CT	NW 3RD AV
NW 5TH ST	NW 5TH AV	NW 3RD CT
NW 5TH AV	NW 5TH ST	NW 6TH ST
NW 5TH ST	NW 7TH AV	NW 5TH AV
NW 7TH ST	NW 37TH AV	NW 34TH AV
NW 37TH AV	NW 7TH ST	NW 11TH ST
NW 7TH ST	NW 42ND AV	NW 37TH AV
NW 42ND AV	NW 7TH ST	NW 11TH ST
NW 7TH ST	NW 45TH AV	NW 42ND AV
NW 45TH AV	NW 7TH ST	NW 13TH ST
BISCAYNE BD	NE 4TH ST	PORT BD
BISCAYNE BD	NE 3RD AV	BISCAYNE BD
NE 4TH ST	NE 2ND AV	BISCAYNE BD
NE 2ND AV	NE 4TH ST	NE 5TH ST
NW 57TH AV	NW 7TH ST	BLUE LAGOON DR
NE 1ST AV	NE 4TH ST	NE 5TH ST
N MIAMI AV	NW 4TH ST	NE 5TH ST
NW 4TH ST	NW 1ST AV	N MIAMI AV
NW 1ST AV	NW 4TH ST	NW 5TH ST
NW 7TH ST	NW 49TH AV	NW 45TH AV
NW 5TH AV	NW 4TH ST	NW 5TH ST
NW 5TH ST	NW SOUTH RIVER DR	NORTH RIVER DR

2025 BICYCLE FACILITIES PLAN
PRIOIRTY IV - UNFUNDED ON-ROAD BYCIYCLE PROJECTS
CATEGORY II[1]

	Limits	
Project or Facility	**From**	**To**
NW 7TH ST	NW 57TH AV	NW 49TH AV
NW 57TH AV	NW 7TH ST	S OF BLUE LAGOON DR
BISCAYNE BD	NE 3RD ST	NE 4TH ST
NE 3RD ST	E OF NE 3RD AV	BISCAYNE BD
NE 3RD ST	NE 2ND AV	BISCAYNE BD
NE 2ND AV	NE 3RD ST	NE 4TH ST
NE 3RD ST	NE 1ST AV	NE 2ND AV
NE 1ST AV	NE 3RD ST	NE 4TH ST
NE 3RD ST	N MIAMI AV	NE 1ST AV
N MIAMI AV	NE 3RD ST	NW 4TH ST
NW 1ST AV	NW 3RD ST	NW 4TH ST
NW 3RD ST	NW 1ST AV	N MIAMI AV
NW 7TH ST	NW TAMIAMI CANAL RD	NW 57TH AV
NW 3RD ST	NW 2ND AV	NW 1ST AV
NW 2ND AV	NW 3RD ST	NW 5TH ST
NW 3RD ST	NW 3RD AV	NW 2ND AV
NW 3RD AV	NW 3RD ST	NW 5TH ST
NW 3RD ST	NW 3RD CT	NW 3RD AV
NW 3RD CT	NW 3RD ST	NW 5TH ST
NW 7TH ST	MILAM DAIRY RD	NW TAMIAMI CANAL RD
NW 3RD ST	NORTH RIVER DR	NW 3RD CT
BISCAYNE BD	NE 2ND ST	NE 3RD ST
NE 2ND ST	BISCAYNE BD	BISCAYNE BD
NE 2ND ST	NE 3RD AV	BISCAYNE BD
NW TAMIAMI CANAL RD	NW 62ND AV	NW 7TH ST
NE 2ND ST	NE 2ND AV	NE 3RD AV
NE 2ND AV	NE 2ND ST	NE 3RD ST
NE 2ND ST	NE 1ST AV	NE 2ND AV
NE 1ST AV	NE 2ND ST	NE 3RD ST
NW 82ND AV	NW 7TH ST	NW 10TH ST
NE 2ND ST	N MIAMI AV	NE 1ST AV
N MIAMI AV	NE 2ND ST	NE 3RD ST
NW 2ND ST	NW 1ST AV	N MIAMI AV
NW 1ST AV	NW 2ND ST	NW 3RD ST
NW 2ND AV	NW 2ND ST	NW 3RD ST
NW 2ND ST	NW 2ND CT	NW 2ND AV
NW 2ND ST	NW 3RD AV	NW 2ND CT

2025 BICYCLE FACILITIES PLAN
PRIOIRTY IV - UNFUNDED ON-ROAD BYCIYCLE PROJECTS
CATEGORY II[1]

	Limits	
Project or Facility	**From**	**To**
NW 3RD AV	NW 2ND ST	NW 3RD ST
NW 7TH ST	NW 87TH AV	NW 82ND AV
NW 2ND ST	NW 3RD CT	NW 3RD AV
NW 3RD CT	NW 2ND ST	NW 3RD ST
NW 2ND ST	NORTH RIVER DR	NW 3RD CT
BISCAYNE BD	NE 1ST ST	NE 2ND ST
NE 1ST ST	BISCAYNE BD	BISCAYNE BD
NE 1ST ST	NE 3RD AV	BISCAYNE BD
NE 3RD AV	NE 1ST ST	NE 2ND ST
NE 2ND AV	NE 1ST ST	NE 2ND ST
NE 1ST AV	NE 1ST ST	NE 2ND ST
NE 1ST ST	NE 2ND AV	NE 3RD AV
NE 1ST ST	NE 1ST AV	NE 2ND AV
NE 1ST ST	N MIAMI AV	NE 1ST AV
N MIAMI AV	NE 1ST ST	NE 2ND ST
NW 1ST ST	NW 1ST AV	N MIAMI AV
NW 1ST AV	NW 1ST ST	NW 2ND ST
NW 1ST ST	NW 2ND AV	NW 1ST AV
NW 2ND AV	NW 1ST ST	NW 2ND ST
WASHINGTON AV	5TH ST	11TH ST
NW 1ST ST	NW 2ND CT	NW 2ND AV
NW 2ND CT	NW 1ST ST	NW 2ND ST
MERIDIAN AV	5TH ST	11TH ST
NW 107TH AV	NW 7TH ST	NW 12TH ST
NW 1ST ST	NW 3RD CT	NW 2ND CT
NW 3RD CT	NW 1ST ST	NW 2ND ST
ALTON RD	5TH ST	11TH ST
NW 1ST ST	NORTH RIVER DR	NW 3RD CT
NW 7TH ST	NW 107TH AV	NW PARK DR
NW 7TH ST	NW 112TH AV	NW 107TH AV
FONTAINEBLEAU BD	NW PARK DR	NW 97TH AV
BISCAYNE BD	E FLAGER ST	NE 1ST AV
NE 3RD AV	E FLAGLER ST	NE 1ST ST
E FLAGLER ST	SE 3RD AV	NE 3RD AV
E FLAGLER ST	BISCAYNE BD	BISCAYNE BD
E FLAGLER ST	NE 3RD AV	BISCAYNE BD
E FLAGLER ST	NE 2ND AV	NE 3RD AV

2025 BICYCLE FACILITIES PLAN
PRIOIRTY IV - UNFUNDED ON-ROAD BYCIYCLE PROJECTS
CATEGORY II[1]

	Limits	
Project or Facility	**From**	**To**
NE 2ND AV	E FLAGLER ST	NE 1ST ST
NW 1ST ST	NW 3RD CT	NW 2ND CT
NW 3RD CT	W FLAGLER ST	NW 1ST ST
W FLAGLER ST	NORTH RIVER DR	NW 3RD CT
E FLAGLER ST	NE 1ST AV	NE 2ND AV
NE 1ST AV	E FLAGLER ST	NE 1ST ST
E FLAGLER ST	N MIAMI AV	NE 1ST AV
N MIAMI AV	E FLAGLER ST	NE 1ST ST
W FLAGLER ST	NW 1ST AV	N MIAMI AV
NW 1ST AV	W FLAGLER ST	NW 1ST ST
W FLAGLER ST	SW SOUTH RIVER DR	NORTH RIVER DR
W FLAGLER ST	NW 2ND AV	NW 1ST AV
NW 2ND AV	W FLAGLER ST	NW 1ST ST
NW 2ND CT	W FLAGLER ST	NW 1ST ST
W FLAGLER ST	NW 3RD CT	NW 2ND CT
W FLAGLER ST	NORTH RIVER DR	NW 2ND CT
W FLAGLER ST	SW 6TH AV	SW SOUTH RIVER DR
W FLAGLER ST	SW 8TH AV	SW 6TH AV
SW 8TH AV	W FLAGLER ST	NW SOUTH RIVER DR
S BISCAYNE BD	SE 1ST ST	BISCAYNE BD
SE 1ST ST	BISCAYNE BD	BISCAYNE BD
SE 1ST ST	NE 3RD AV	BISCAYNE BD
NE 3RD AV	SE 1ST ST	E FLAGLER ST
SE 1ST ST	SE 2ND AV	NE 3RD AV
SE 2ND AV	SE 1ST ST	E FLAGLER ST
SE 1ST ST	SE 1ST AV	SE 2ND AV
SE 1ST AV	SE 1ST ST	E FLAGLER ST
S MIAMI AV	SE 1ST ST	E FLAGLER ST
SE 1ST ST	S MIAMI AV	SE 1ST AV
SW 1ST ST	NW 1ST AV	S MIAMI AV
NW 1ST AV	SW 1ST ST	W FLAGLER ST
SW 1ST ST	NW 1ST CT	NW 1ST AV
SW 1ST ST	SW 2ND AV	NW 1ST CT
SW 2ND AV	SW 1ST ST	W FLAGLER ST
CHOPIN PLAZA	BISCAYNE BD	E OF BISCAYNE BLVD
BISCAYNE BD	CHOPIN PLAZA	SE 1ST ST
SW 8TH AV	SW 1ST ST	W FLAGLER ST

2025 BICYCLE FACILITIES PLAN
PRIOIRTY IV - UNFUNDED ON-ROAD BYCIYCLE PROJECTS
CATEGORY II[1]

	Limits	
Project or Facility	**From**	**To**
SE 2ND AV	SE 2ND ST	SE 1ST ST
SE 2ND ST	NE 3RD AV	BISCAYNE BD
NE 3RD AV	SE 2ND ST	SE 1ST ST
SE 2ND ST	SE 1ST AV	SE 2ND AV
SE 1ST AV	SE 2ND ST	SE 1ST ST
SE 2ND ST	S MIAMI AV	SE 1ST AV
S MIAMI AV	SE 2ND ST	SE 1ST ST
NW TAMIAMI CANAL RD	NW 67TH AV	NW 62ND AV
SW 2ND ST	NW 1ST AV	S MIAMI AV
NW 1ST AV	SW 2ND ST	SW 1ST ST
SW 2ND ST	NW 1ST CT	NW 1ST AV
NW 1ST CT	SW 2ND ST	SW 1ST ST
SW 2ND ST	SW 2ND AV	NW 1ST CT
SW 2ND AV	SW 2ND ST	SW 1ST ST
SW 2ND ST	NORTH RIVER DR	SW 2ND AV
W FLAGLER ST	SW 22ND AV	NW 22ND AV
BISCAYNE BD	SE 3RD ST	CHOPIN PLAZA
NW 6TH ST	NW 127TH AV	NW 122ND AV
NW 127TH AV	NW 6TH ST	NW 12TH ST
NE 3RD AV	SE 3RD ST	SE 2ND ST
NW PARK BD	FONTAINEBLEAU BD	NW 87TH AV
FONTAINEBLEAU BD	NW 97TH AV	NW PARK BD
SE 3RD ST	NE 3RD AV	BISCAYNE BD
NW 32ND AV	W FLAGLER ST	NW 7TH ST
SE 3RD ST	SE 2ND AV	NE 3RD AV
NW 6TH ST	NW 132ND AV	NW 127TH AV
NW 132ND AV	NW 6TH ST	NW 12TH ST
NW 34TH AV	W FLAGLER ST	NW 7TH ST
S MIAMI AV	SW 3RD ST	SE 2ND ST
SE 1ST AV	SE 4TH ST	SE 2ND ST
NW 1ST CT	SW 3RD ST	SW 2ND ST
SW 2ND AV	SW 3RD ST	SW 2ND ST
SW 22ND AVRD	SW 1ST ST	SW 22ND AV
SW 1ST STRD	W FLAGLER ST	SW 22ND AVRD
SW 1ST ST	SW 22ND AVRD	SW 22ND AV
SE 2ND AV	SE 4TH ST	SE 3RD ST
NE 3RD AV	SE 4TH ST	SE 3RD ST

2025 BICYCLE FACILITIES PLAN
PRIOIRTY IV - UNFUNDED ON-ROAD BYCIYCLE PROJECTS
CATEGORY II[1]

	Limits	
Project or Facility	**From**	**To**
SE 2ND AV	BISCAYNE BD	SE 4TH ST
W FLAGLER ST	SW 47TH AV	NW 42ND AV
W FLAGLER ST	NW 49TH AV	SW 47TH AV
NW 49TH AV	W FLAGLER ST	NW 7TH ST
W FLAGLER ST	NW 57TH AV	NW 49TH AV
NW 57TH AV	W FLAGLER ST	NW 7TH ST
W FLAGLER ST	NW 62ND AV	NW 57TH AV
NW 62ND AV	W FLAGLER ST	NW TAMIAMI CANAL RD
PONCE DE LEON BD	SW 37TH AV	W FLAGLER ST
W FLAGLER ST	NW 67TH AV	NW 62ND AV
NW 67TH AV	W FLAGLER ST	NW TAMIAMI CANAL RD
W FLAGLER ST	NW 69TH AV	NW 67TH AV
NW 69TH AV	W FLAGLER ST	NW TAMIAMI CANAL RD
W FLAGLER ST	NW 72ND AV	NW 69TH AV
NW 72ND AV	W FLAGLER ST	NW 7TH ST
W FLAGLER ST	NW 79TH AV	NW 72ND AV
NW 79TH AV	NW 2ND ST	NW 7TH ST
W FLAGLER ST	NW 82ND AV	NW 79TH AV
NW 82ND AV	W FLAGLER ST	NW 7TH ST
S MIAMI AV	SE 5TH AV	SE 4TH ST
W FLAGLER ST	NW 87TH AV	NW 82ND AV
W FLAGLER ST	FONTAINEBLEAU BD	NW 87TH AV
FONTAINEBLEAU BD	W FLAGLER ST	NW PARK RD
WASHINGTON AV	ALTON RD	5TH ST
ALTON RD	COLLINS AV	5TH ST
SW 6TH ST	S MIAMI AV	BRICKELL AV
W FLAGLER ST	SW 92ND AV	FONTAINEBLEAU BD
W FLAGLER ST	NW 97TH AV	SW 92ND AV
NW 97TH AV	W FLAGLER ST	FONTAINEBLEAU BD
W FLAGLER ST	NW PARK DR	NW 97TH AV
NW PARK DR	W FLAGLER ST	FONTAINEBLEAU BD
W FLAGLER ST	NW 107TH AV	NW PARK DR
NW 107TH AV	W FLAGLER ST	NW 7TH ST
S MIAMI AV	SE 7TH ST	SW 1ST AV
W FLAGLER ST	NW 112TH AV	NW 107TH AV
NW 112TH AV	W FLAGLER ST	NW 7TH ST
NW 118TH AV	W FLAGLER ST	NW 6TH ST

2025 BICYCLE FACILITIES PLAN
PRIOIRTY IV - UNFUNDED ON-ROAD BYCIYCLE PROJECTS
CATEGORY II[1]

	Limits	
Project or Facility	**From**	**To**
SW 6TH ST	SW 17TH AV	SW 12TH AV
SW 2ND AV	SW 7TH ST	SW 3RD ST
SW 7TH ST	SW 1ST AV	S MIAMI AV
SW 1ST AV	SW 7TH ST	S MIAMI AV
SW 7TH ST	SW 2ND AV	SW 1ST AV
W FLAGLER ST	NW 114TH AV	NW 112TH AV
NW 114TH AV	W FLAGLER ST	NW 7TH ST
W FLAGLER ST	NW 118TH AV	NW 114TH AV
SW 7TH ST	SW 3RD AV	SW 2ND AV
SW 7TH ST	SW 4TH ST	SW 3RD AV
SE 7TH ST	S MIAMI AV	BRICKELL AV
SW 6TH ST	SW 22ND AV	SW 17TH AV
SW 7TH ST	SW 6TH AV	SW 4TH ST
SW 7TH ST	SW 8TH AV	SW 6TH AV
SW 8TH AV	SW 7TH ST	SW 1ST ST
SW 6TH ST	SW 22ND AVRD	SW 22ND AV
SW 22ND AVRD	SW 6TH ST	SW 1ST ST
SW 7TH ST	SW 10TH AV	SW 8TH AV
SW 7TH ST	SW 12TH AV	SW 10TH AV
SW 7TH ST	SW 14TH AV	SW 12TH AV
S MIAMI AV	SE 8TH ST	SE 7TH ST
SW 7TH ST	SW 17TH AV	SW 14TH AV
SW 1ST AV	SW 8TH ST	SW 7TH ST
SW 7TH ST	SW 19TH AV	SW 17TH AV
SW 3RD AV	SW 8TH ST	SW 7TH ST
SW 2ND AV	SW 8TH ST	SW 7TH ST
SW 7TH ST	SW 22ND AV	SW 19TH AV
SW 22ND AV	SW 7TH ST	SW 6TH ST
SW 7TH ST	SW 23RD AV	SW 22ND AV
SW 7TH ST	SW 22ND AVRD	SW 23RD AV
SW 22ND AVRD	SW 7TH ST	SW 6TH ST
SW 7TH ST	SW 27TH AV	SW 22ND AVRD
SW 6TH AV	SW 8TH ST	SW 7TH ST
SW 8TH AV	SW 8TH ST	SW 7TH ST
SW 10TH AV	SW 8TH ST	SW 7TH ST
SW 14TH AV	SW 8TH ST	SW 7TH ST
SW 19TH AV	SW 8TH ST	SW 7TH ST

2025 BICYCLE FACILITIES PLAN
PRIOIRTY IV - UNFUNDED ON-ROAD BYCIYCLE PROJECTS
CATEGORY II[1]

	Limits	
Project or Facility	**From**	**To**
SW 23RD AV	SW 8TH ST	SW 7TH ST
SW 22ND AVRD	SW 8TH ST	SW 7TH ST
SW 32ND AV	SW 8TH ST	W FLAGLER ST
PONCE DE LEON BD	SW 8TH ST	SW 37TH AV
SW 47TH AV	SW 8TH ST	W FLAGLER ST
SW 49TH AV	SW 8TH ST	W FLAGLER ST
SW 57TH AV	SW 8TH ST	W FLAGLER ST
SW 62ND AV	SW 8TH ST	W FLAGLER ST
SW 67TH AV	SW 8TH ST	W FLAGLER ST
TAMIAMIA CANAL DR	SW 8TH ST	W FLAGLER ST
SE 13TH ST	S MIAMI AV	BRICKELL AV
S MIAMI AV	SW 13TH ST.	SE 8TH ST
SW 13TH ST	SW 1ST AV	S MIAMI AV
SW 1ST AV	SW 13TH ST	SW 8TH ST
SW 13TH ST	SW 2ND AV	SW 1ST AV
SW 2ND AV	SW 13TH ST	SW 8TH ST
SW 122ND AV	SW 6TH ST	SW FLAGLER TE
SW 118TH AV	SW 6TH ST	W FLAGLER ST
SW 13TH ST	SW 15TH RD	SW 2ND AV
SW 8TH ST	SW 87TH AV	SW 82ND AV
SW 8TH ST	SW 92ND AV	SW 87TH AV
SW 92ND AV	SW 8TH ST	W FLAGLER ST
SW 8TH ST	SW 97TH AV	SW 92ND AV
SW 97TH AV	SW 8TH ST	W FLAGLER ST
SW 8TH ST	SW 102ND AV	SW 97TH AV
SW 2ND AV	SW 15TH RD	SW 13TH ST
SW 15TH RD	SW 13TH RD	SW 2ND AV
SW 8TH ST	SW 107TH AV	SW 102ND AV
SW 122ND AV	SW 8TH ST	SW 6TH ST
SW 137TH AV	SW 8TH ST	NW 137TH AV
SW 8TH ST	SW 139TH AV	SW 137TH AV
SW 132ND AV	SW 8TH ST	SW 1ST ST
SW 8TH ST	SW 137TH AV	SW 132ND AV
SW 8TH ST	SW 127TH AV	SW 122ND AV
SW 127TH AV	SW 8TH ST	S OF NW 2ND ST
SW 8TH ST	SW 132ND AV	SW 127TH AV
SW 8TH ST	SW 177TH AV	SW 139TH AV

2025 BICYCLE FACILITIES PLAN
PRIOIRTY IV - UNFUNDED ON-ROAD BYCIYCLE PROJECTS
CATEGORY II[1]

	Limits	
Project or Facility	**From**	**To**
SW 8TH ST	SW 187TH AV	SR 27 HY
S MIAMI AV	SE 15TH RD	SW 13TH RD
SW 15TH RD	SW 2ND AV	S MIAMI AV
SW 16TH ST	SW 19TH AV	SW 17TH AV
SE 15TH RD	S MIAMI AV	BRICKELL AV
SW 16TH ST	SW 27TH AV	SW 22ND AV
SW 16TH ST	SW 32ND AV	SW 27TH AV
SW 32ND AV	SW 16TH AV	SW 8TH ST
SW 16TH ST	SW 37TH AV	SW 32ND AV
SW 3RD AV	SW 25TH AV	SW 15TH RD
SW 25TH RD	SW 5TH AV	SW 9TH AV
SW 16TH ST	SW 62ND AV	SW 57TH AV
SW 62ND AV	SW 16TH ST	SW 8TH ST
SW 3RD AV	SW 26TH RD	SW 25TH RD
SW 16TH ST	SW 67TH AV	SW 62ND AV
SW 67TH AV	SW 16TH AV	SW 8TH ST
SW 16TH ST	SW 72ND AV	SW 70TH AV
SW 74TH AV	SW 16TH ST	SW 8TH ST
SW 16TH ST	SW 76TH CT	SW 74TH AV
SW 76TH CT	SW 12TH ST	SW 8TH ST
SW 16TH ST	SW 82ND AV	SW 79TH CT
SW 82ND AV	SW 16TH ST	SW 8TH ST
SW 16TH ST	SW 87TH AV	SW 82ND AV
SW 16TH ST	SW 92ND AV	SW 87TH AV
SW 92ND AV	SW 16TH ST	SW 8TH ST
SW 97TH AV	SW 16TH ST	SW 8TH ST
GRANADA BD	ALHAMBRA CR	SW 8TH ST
SW 16TH ST	SW 97TH AV	SW 92ND AV
SW 16TH ST	SW 102ND AV	SW 97TH AV
SW 102ND AV	SW 16TH ST	SW 8TH ST
SW 25TH RD	SW 1ST AV	SW 3RD AV
ALHAMBRA CR	MADRID ST	GRANADA BD
SW 16TH ST	SW 107TH AV	SW 102ND AV
SW 107TH AV	SW 16TH ST	SW 8TH AV
CADIZ AV	SW 57TH AV	MADRID ST
SW 1ST AV	SW 26TH RD	SW 25TH RD
SW 25TH RD	I-95 RAMP	SW 1st AV

2025 BICYCLE FACILITIES PLAN
PRIOIRTY IV - UNFUNDED ON-ROAD BYCIYCLE PROJECTS
CATEGORY II[1]

	Limits	
Project or Facility	**From**	**To**
SW MIAMI CT	SW 26TH ST	SW 25TH RD
S MIAMI AV	SE 25th Str	SE 15TH RD
SW 25TH RD	S MIAMI AV	I-95 Ramp
ALHAMBRA PZ	MERRICK WY	SW 37TH AV
ALHAMBRA CR	ALHAMBRA PZ	SW 37TH AV
PONCE DE LEON BD	PONCE DE LEON BD	ALHAMBRA CR
PONCE DE LEON BD	ALHAMBRA CR	SW 8TH ST
ALHAMBRA CR	SW 42ND AV	PONCE DE LEON BD
S MIAMI AV	RICKENBACKER CSWY	SE 25TH RD
ALHAMBRA CR	SEGOVIA ST	SW 42ND AV
SEGOVIA ST	ALHAMBRA CR	SW 16TH ST
ALHAMBRA CR	GRANADA BD	SEGOVIA ST
SW 3RD AV	SW 12th AV	SW 26TH RD
SE 25TH RD	BRICKELL AV	S MIAMI AV
SW 74TH AVRD	SW 19TH TE	SW 16TH TE
SW 19TH TE	SW 76TH CT	SW 75TH AV
SW 17TH AV	SW 22ND ST	SW 15TH ST
SW 122ND AV	SW 18TH ST	SW 10TH ST
SW 18TH ST	SW 127TH AV	SW 122ND AV
SW 127TH AV	SW 18TH ST	SW 8TH ST
SW 18TH ST	SW 132ND AV	SW 127TH AV
SW 132ND AV	SW 18TH ST	SW 8TH ST
SW 32ND AV	SW 22ND ST	SW 16TH STR
SW 137TH AV	SW 18TH ST	SW 8TH ST
SW 18TH ST	SW 139TH AV	SW 137TH AV
SW 139TH AV	SW 18TH ST	SW 8TH ST
SW 18TH ST	SW 137TH AV	SW 132ND AV
MIRACLE MILE	PONCE DE LEON BD	SW 137TH AV
PONCE DE LEON BD	MIRACLE MILE	ALHAMBRA CR
MIRACLE MILE	SW 42ND AV	PONCE DE LEON BD
CORAL WY	BILTMORE WY	SW 42ND AV
SEGOVIA ST	CORAL WY	ALHAMBRA CR
CORAL WY	SEGOVIA ST	SW 42ND AV
CORAL WY	ANDERSON RD	SEGOVIA ST
CORAL WY	GRANADA BD	ANDERSON RD
GRANADA BD	CORAL WY	ALHAMBRA CR
BILTMORE WY	BILTMORE WY	CORAL WY

2025 BICYCLE FACILITIES PLAN
PRIOIRTY IV - UNFUNDED ON-ROAD BYCIYCLE PROJECTS
CATEGORY II[1]

	Limits	
Project or Facility	**From**	**To**
ALHAMBRA CR	CORAL WY	MADRID ST
ANDALUSIA AV	BILTMORE WY	SW 42ND AV
CORAL WY	ALHAMBRA CR	GRANADA BD
CORAL WY	SW 57TH AV	ALHAMBRA CR
BILTMORE WY	SEGOVIA ST	BILTMORE WY
SEGOVIA ST	BILTMORE WY	CORAL WY
SW 62ND AV	SW 24TH ST	SW 16TH ST
BILTMORE WY	ANDERSON RD	SEGOVIA ST
ANDERSON RD	BILTMORE WY	CORAL WY
SW 75TH AV	SW 24TH ST	SW 21ST ST
SW 67TH AV	SW 24TH ST	SW 16TH ST
SW 82ND AV	SW 24TH ST	SW 16TH AV
SW 92ND AV	SW 24TH ST	SW 16TH ST
SW 3RD AV	SW 16TH AV	SW 22ND AV
SW 102ND AV	SW 24TH ST	SW 16TH ST
SW 17TH AV	S DIXIE HY	SW 22ND AV
SW 107TH AV	SW 24TH ST	SW 16TH ST
SW 24TH ST	ASW 117TH AV	SW 112TH AV
SW 117TH AV	SW 24TH ST	SW 112TH AV
DESOTO BD	GRANADA BD	ANDERSON RD
GRANADA BD	SEVILLA AV	CORAL WY
ALHAMBRA CR	SEVILLA AV	CORAL WY
PONCE DE LEON BD	UNIVERSITY DR	MIRACLE MILE
SW 26TH ST	SW 122ND AV	SW 117TH AV
SW 122ND AV	SW 26TH ST	SW 18TH ST
SW 26TH ST	SW 127TH AV	SW 122ND AV
SW 127TH AV	SW 26TH ST	SW 18TH ST
SW 26TH ST	SW 132ND AV	SW 127TH AV
SW 132ND AV	SW 26TH ST	SW 18TH ST
SW 26TH ST	SW 137TH AV	SW 132ND AV
SW 137TH AV	SW 26TH ST	SW 18TH ST
SW 26TH ST	SW 139TH AV	SW 137TH AV
SW 139TH AV	SW 26TH ST	SW 18TH ST
SW 62ND AV	SW 30TH ST	SW 24TH ST
SW 17TH AV	TIGERTAIL AV	S DIXIE HY
UNIVERSITY DR	SALZEDO ST	PONCE DE LEON BD
SEGOVIA ST	ANASTASIA AV	BILTMORE WY

2025 BICYCLE FACILITIES PLAN
PRIOIRTY IV - UNFUNDED ON-ROAD BYCIYCLE PROJECTS
CATEGORY II[1]

	Limits	
Project or Facility	**From**	**To**
GRANADA BD	ANASTASIA AV	SEVILLA AV
DESOTO BD	ANASTASIA AV	GRANADA BD
SW 82ND AV	SW 82ND AV	SW 79TH AV
SW 32ND ST	SW 82ND AV	SW 79TH AV
SW 17TH AV	S BAYSHORE DR	TIGERTAIL AV
SW 32ND ST	SW 87TH AV	SW 82ND AV
SW 32ND ST	SW 92ND AV	SW 87TH AV
SW 92ND AV	SW 32ND ST	SW 24TH ST
SW 32ND ST	SW 97TH AV	SW 92ND AV
SW 32ND ST	SW 102ND AV	SW 97TH AV
SW 102ND AV	SW 32ND ST	SW 24TH ST
SW 32ND ST	SW 107TH AV	SW 102ND AV
SW 107TH AV	SW 32ND ST	SW 24TH ST
SW 32ND ST	SW 112TH AV	SW 107TH AV
SW 112TH AV	SW 32ND ST	SW 24TH ST
SW 32ND ST	SW 117TH AV	SW 112TH AV
SW 117TH AV	SW 32ND ST	SW 24TH ST
UNIVERSITY DR	SEGOVIA ST	SW 42ND AV
SEGOVIA ST	UNIVERSITY DR	ANASTASIA DR
TIGERTAIL AV	SW 22ND AV	SW 17TH AV
SW 22ND AV	TIGERTAIL AV	S DIXIE HY
SW 32ND AV	S DIXIE HY	SW 22ND ST
SW 22ND AV	S BAYSHORE DR	TIGERTAIL AV
SW 27TH AV	BILTMORE WY	SW 42ND AV
SW 139TH AV	SW 34TH ST	SW 26TH ST
BIRD AV	MCDONALD ST	SW 27TH AV
MCDONALD ST	BIRD AV	S DIXIE HY
BIRD AV	S DIXIE HY	MCDONALD ST
BIRD AV	SW 37TH AV	S DIXIE HY
PONCE DE LEON BD	SW 40TH ST	UNIVERSITY DR
SEGOVIA ST	SW 40TH ST	UNIVERSITY DR
UNIVERSITY DR	SW 40TH ST	SEGOVIA ST
ALHAMBRA CR	SW 40TH ST	SEVILLA AV
SW 67TH AV	SW 40TH ST	SW 24TH ST
SW 40TH ST	SW 72ND AV	SW 67TH AV
SW 72ND AV	SW 40TH ST	SW 24TH ST
SW 82ND AV	SW 40TH ST	SW 32ND ST

2025 BICYCLE FACILITIES PLAN
PRIOIRTY IV - UNFUNDED ON-ROAD BYCIYCLE PROJECTS
CATEGORY II[1]

	Limits	
Project or Facility	**From**	**To**
SW 40TH ST	SW 82ND AV	SW 72ND AV
SW 40TH ST	SW 87TH AV	SW 82ND AV
SW 40TH ST	SW 92ND AV	SW 87TH AV
SW 92ND AV	SW 40TH ST	SW 32ND ST
SW 40TH ST	SW 97TH AV	SW 92ND AV
SW 27TH AV	DAY AV	BIRD AV
SW 40TH ST	SW 102ND AV	SW 97TH AV
SW 102ND AV	SW 40TH ST	SW 32ND ST
SW 40TH ST	SW 107TH AV	SW 102ND AV
SW 107TH AV	SW 40TH ST	SW 32ND CT
SW 112TH AV	SW 40TH ST	SW 32ND ST
SW 40TH ST	SW 112TH AV	SW 107TH AV
SW 40TH ST	SW 107TH AV	SW 112TH AV
SW 117TH AV	SW 40TH ST	SW 32ND ST
SW 40TH ST	SW 122ND AV	SW 117TH AV
SW 122ND AV	SW 40TH ST	SW 26TH ST
SW 42ND ST	SW 127TH AV	SW 122ND AV
SW 127TH AV	SW 42ND ST	SW 26TH ST
SW 27TH AV	S BAYSHORE DR	DAY AV
SW 42ND ST	SW 132ND AV	SW 127TH AV
SW 132ND AV	SW 42ND ST	SW 26TH ST
SW 42ND ST	SW 137TH AV	SW 132ND AV
SW 137TH AV	SW 42ND ST	SW 26TH ST
SW 42ND ST	SW 139TH AV	SW 137TH AV
SW 139TH AV	SW 42ND ST	SW 34TH ST
SW 42ND ST	SW 142ND AV	SW 139TH AV
SW 142ND AV	SW 37TH ST	SW 34TH ST
SW 42ND ST	SW 147TH AV	SW 142ND AV
SW 147TH AV	SW 42ND ST	SW 26TH ST
GRAND AV	SW 37TH AV	MCDONALD ST
SW 37TH AV	GRAND AV	S DIXIE HY
SW 42ND ST	SW 152ND AV	SW 147TH AV
GRAND AV	S DIXIE DR	SW 37TH AV
S GRAND AV	SW 42ND AV	S DIXIE HY
PONCE DE LEON BD	GRECO AV	SW 40TH ST
SW 42ND ST	E OF SW 162ND AV	SW 152ND AV
BLUE RD	ALHAMBRA CR	GRANADA BD

2025 BICYCLE FACILITIES PLAN
PRIOIRTY IV - UNFUNDED ON-ROAD BYCIYCLE PROJECTS
CATEGORY II[1]

	Limits	
Project or Facility	**From**	**To**
ALHAMBRA CR	BLUE RD	SW 40TH ST
BLUE RD	SW 57TH AV	ALHAMBRA CR
SW 48TH ST	SW 62ND AV	SW 57TH AV
SW 62ND AV	SW 48TH ST	SW 40TH ST
SW 48TH ST	SW 67TH AV	SW 62ND AV
SW 67TH AV	SW 48TH ST	SW 40TH ST
SW 48TH ST	SW 87TH AV	SW 82ND AV
SW 48TH ST	SW 92ND AV	SW 87TH AV
SW 142ND AV	SW 47TH ST	SW 42ND ST
SW 48TH ST	SW 97TH AV	SW 92ND AV
SW 48TH ST	SW 102ND AV	SW 97TH AV
SW 102ND AV	SW 48TH ST	SW 40TH ST
SW 48TH ST	SW 107TH TE	SW 102ND AV
SW 107TH AV	SW 47TH TE	SW 40TH ST
SW 47TH TE	SW 112TH AV	SW 107TH AV
SW 112TH AV	SW 47TH TE	SW 40TH ST
SW 47TH TE	SW 117TH AV	SW 112TH AV
SW 117TH AV	SW 47TH TE	SW 40TH ST
SW 47TH ST	SW 122ND AV	SW 118TH AV
SW 122ND AV	SW 47TH ST	SW 42ND ST
SW 47TH ST	SW 127TH AV	SW 122ND AV
SW 127TH AV	SW 47TH ST	SW 42ND ST
SW 47TH ST	SW 132ND AV	SW 127TH AV
SW 132ND AV	SW 47TH ST	SW 42ND ST
SW 47TH ST	SW 137TH AV	SW 132ND AV
SW 137TH AV	SW 47TH ST	SW 42ND ST
SW 47TH ST	SW 142ND AV	SW 137TH AV
SW 152ND AV	SW 47TH ST	SW 42ND ST
SW 47TH ST	SW 147TH AV	SW 142ND AV
SW 147TH AV	SW 47TH ST	SW 42ND ST
SW 47TH ST	E MEADOW LAKE DR	SW 147TH AV
PONCE DE LEON BD	GRANADA BD	RIVIERA DR
S DIXIE HY	S DIXIE HY	PONCE DE LEON BD
ALHAMBRA CR	MILLER RD	BLUE RD
MILLER RD	SW 57TH AV	ALHAMBRA CR
SW 56TH ST	SW 58TH AV	SW 57TH AV
SW 62ND AV	SW 56TH ST	SW 48TH ST

2025 BICYCLE FACILITIES PLAN
PRIOIRTY IV - UNFUNDED ON-ROAD BYCIYCLE PROJECTS
CATEGORY II[1]

	Limits	
Project or Facility	**From**	**To**
SW 56TH ST	SW 67TH AV	SW 62ND AV
SW 67TH AV	SW 56TH ST	SW 48TH ST
MAIN HY	FRANKLIN AV	GRAND AV
SW 37TH AV	MAIN HY	PONCE DE LEON BLVD
SW 56TH ST	SW 72ND AV	SW 67TH AV
SW 72ND AV	SW 56TH ST	SW 40TH ST
PONCE DE LEON BD	MAYNADA ST	GRANADA BLVD
SW 56TH ST	SW 82ND AV RD	SW 72ND AV
STANFORD DR	S DIXIE HY	PONCE DE LEON BD
SW 56TH ST	SW 82ND AV	SW 82ND AVRD
SW 82ND AV	SW 56TH ST	SW 48TH ST
SW 56TH ST	SW 87TH AV	SW 82ND AV
SW 56TH ST	SW 92ND AV	SW 87TH AV
SW 92ND AV	SW 56TH ST	SW 48TH ST
SW 56TH ST	SW 97TH AV	SW 92ND AV
SW 56TH ST	SW 102ND AV	SW 97TH AV
SW 102ND AV	SW 56TH ST	SW 48TH ST
SW 122ND AV	SW 56TH ST	SW 47TH ST
SW 56TH ST	SW 107TH AV	SW 102ND AV
SW 107TH AV	SW 56TH ST	SW 48TH ST
SW 56TH ST	SW 112TH AV	SW 107TH AV
SW 112TH AV	SW 56TH ST	SW 47TH TE
SW 56TH ST	SW 127TH AV	SW 122ND AV
SW 127TH AV	SW 56TH ST	SW 47TH ST
SW 56TH ST	SW 117TH AV	SW 112TH AV
SW 117TH AV	SW 56TH ST	SW 47TH TE
SW 56TH ST	SW 122ND AV	SW 117TH AV
SW 56TH ST	SW 132ND AV	SW 127TH AV
SW 132ND AV	SW 56TH ST	SW 47TH ST
SW 56TH ST	SW 137TH AV	SW 132ND AV
SW 137TH AV	SW 56TH ST	SW 47TH ST
SW 56TH ST	SW 142ND AV	SW 137TH AV
SW 142ND AV	SW 56TH ST	SW 47TH ST
SW 56TH ST	SW 147TH AV	SW 142ND AV
SW 147TH AV	SW 56TH ST	SW 47TH ST
INGRAHAM HY	SUNSHINE BD	PARK LA
SW 56TH ST	SW 152ND AV	SW 147TH AV

2025 BICYCLE FACILITIES PLAN
PRIOIRTY IV - UNFUNDED ON-ROAD BYCIYCLE PROJECTS
CATEGORY II[1]

	Limits	
Project or Facility	**From**	**To**
SW 152ND AV	SW 56TH ST	E MEADOW LAKE DR
HARDIE AV	SW 42ND AV	INGRAHAM HY
SW 56TH ST	SW 157TH AV	SW 152ND AV
HARDEE RD	GRANADA BD	SW 42ND AV
HARDEE RD	MAYNADA ST	GRANADA BD
MAYNADA ST	HARDEE RD	AUGUSTO ST
SW 64TH ST	SW 62ND AV	SW 57TH AV
SW 62ND AV	SW 64TH ST	SW 56TH ST
SW 64TH ST	SW 67TH AV	SW 62ND AV
SW 67TH AV	SW 64TH ST	SW 5TH ST
PONCE DE LEON BD	SAN AMARO DR	STANFORD DR
ALHAMBRA CR	BRESCIA AV	ALHAMBRA CR
SW 64TH ST	SW 72ND AV	SW 67TH AV
SW 72ND AV	SW 64TH ST	SW 56TH ST
SW 117TH AV	N SNAPPER CREEK DR	SW 56TH ST
SW 64TH ST	SW 92ND AV	SW 87TH AV
SW 92ND AV	SW 64TH ST	SW 56TH ST
SW 64TH ST	SW 97TH AV	SW 92ND AV
S DIXIE HY	SW 57TH AV	SAN AMARO DR
SW 64TH ST	SW 102ND AV	SW 97TH AV
SW 102ND AV	SW 64TH ST	SW 56TH ST
SW 64TH ST	SW 107TH AV	SW 102ND AV
SW 107TH AV	SW 64TH ST	SW 56TH ST
SW 42ND AV	W INGRAHAM TE	HARDIE AV
INGRAHAM HY	EDGEWATER DR	HARDIE AV
ALHAMBRA CR	MAYNADA ST	GRANADA BD
MAYNADA ST	ALHAMBRA CR	HARDEE RD
ALHAMBRA CR	S TRIONFO ST	S DIXIE HY
ALHAMBRA CR	S TRIONFO ST	MAYNADA ST
SW 42ND AV	OLD CUTLER RNDABT	W INGRAHAM TE
SW 112TH AV	N SNAPPER CREEK DR	SW 56TH ST
OLD CUTLER RNDABT	SW 72ND ST	SW 42ND AV
OLD CUTLER RNDABT	OLD CUTLER RD	SW 42ND AV
OLD CUTLER RNDABT	OLD CUTLER RD	SUNSET DR
SW 72ND ST	PONCE DE LEON BD	OLD CUTLER RNDABT
MAYNADA ST	SW 72ND ST	ALHAMBRA CR
SW 72ND ST	SW 52ND ST	MAYNADA ST

2025 BICYCLE FACILITIES PLAN
PRIOIRTY IV - UNFUNDED ON-ROAD BYCIYCLE PROJECTS
CATEGORY II[1]

	Limits	
Project or Facility	**From**	**To**
TRIONFO ST	SW 72ND ST	ALHAMBRA CR
SW 72ND ST	YUMURI ST	SW 52ND AV
SW 57TH AV	SW 72ND ST	S DIXIE HY
SW 72ND ST	S DIXIE HY	SW 57TH AV
SW 72ND ST	SW 62ND AV	S DIXIE HY
SW 62ND AV	SW 72ND ST	SW 64TH ST
SW 72ND ST	SW 67TH AV	SW 62ND AV
SW 67TH AV	SW 72ND ST	SW 64TH ST
SW 72ND ST	SW 72ND AV	SW 67TH AV
SW 72ND AV	SW 72ND ST	SW 64TH ST
SW 72ND ST	SW 82ND AV	SW 72ND AV
SW 72ND ST	SW 87TH AV	SW 82ND AV
SW 72ND ST	SW 92ND AV	SW 87TH AV
SW 92ND AV	SW 72ND ST	SW 64TH ST
SW 62ND AV	S DIXIE HY	SW 72ND AV
SW 107TH AV	N SNAPPER CREEK DR	SW 64TH ST
N SNAPPER CREEK DR	SW 107TH AV	SW 112TH AV
SW 72ND ST	SW 97TH AV	SW 92ND AV
SW 72ND ST	SW 102ND AV	SW 97TH AV
SW 102ND AV	SW 72ND ST	SW 64TH ST
SW 72ND ST	SW 107TH AV	SW 102ND AV
SW 107TH AV	SW 72ND ST	N SNAPPER CREEK DR
SW 72ND ST	SW 117TH AV	SW 107TH AV
SW 117TH AV	SW 72ND ST	N SNAPPER CREEK DR
SW 72ND ST	SW 127TH AV	SW 117TH AV
SW 127TH AV	SW 72ND ST	SW 56TH ST
SW 72ND ST	SW 137TH AV	SW 127TH AV
SW 137TH AV	SW 72ND ST	SW 56TH ST
SW 72ND ST	SW 142ND AV	SW 137TH AV
SW 72ND ST	SW 147TH AV	SW 142ND AV
SW 147TH AV	SW 72ND ST	SW 56TH ST
SW 72ND ST	SW 152ND AV	SW 147TH AV
SW 152ND AV	SW 72ND ST	SW 56TH ST
SW 72ND ST	SW 157TH AV	SW 154THAV
SW 72ND ST	SW 162ND AV	SW 157TH AV
OLD CUTLER RD	DAVIS RD	SW 72ND AV
DAVIS RD	SW 47TH AV	OLD CUTLER RD

2025 BICYCLE FACILITIES PLAN
PRIOIRTY IV - UNFUNDED ON-ROAD BYCIYCLE PROJECTS
CATEGORY II[1]

	Limits	
Project or Facility	**From**	**To**
PONCE DE LEON RD	SW 80TH ST	SW 72ND ST
SW 72ND ST	SW 163RD AV	SW 162ND AV
SW 80TH ST	SW 52ND AV	PONCE DE LEON BD
SW 52ND AV	SW 80TH ST	SW 72ND ST
SW 80TH ST	SW 57TH AV	SW 52ND AV
SW 57TH AV	SW 80TH ST	SW 74TH ST
SW 80TH ST	SW 62ND AV	SW 57TH AV
SW 62ND AV	SW 78TH AV	S DIXIE HY
SW 80TH ST	SW 67TH AV	S DIXIE HY
SW 67TH AV	SW 80TH ST	SW 72ND ST
SW 80TH ST	SW 72ND AV	SW 67TH AV
SW 72ND AV	SW 80TH ST	SW 72ND ST
SW 67TH AV	S DIXIE HY	SW 80TH ST
SW 97TH AV	N SNAPPER CREEK DR	SW 72ND ST
SW 152ND AV	SW 80TH ST	SW 72ND ST
SW 80TH ST	SW 157TH AV	SW 152ND AV
SW 157TH AV	SW 80TH ST	SW 72ND ST
SW 72ND AV	SW 85TH ST	SW 80TH ST
SW 147TH AV	SW 80TH ST	SW 72ND ST
SW 80TH ST	SW 152ND AV	SW 147TH AV
SW 80TH ST	SW 162ND AV	SW 157TH AV
SW 162ND AV	SW 80TH ST	SW 72ND ST
OLD CUTLER RD	SW 88TH ST	DAVIS RD
SW 85TH ST	DADELAND MALL CR	SW 72ND AV
SW 88TH ST	PONCE DE LEON BD	OLD CUTLER RD
PONCE DE LEON RD	SW 88TH ST	SW 80TH ST
SW 85TH ST	SW 72ND AV	SW 70TH AV
SW 88TH ST	SW 52ND AV	PONCE DE LEON RD
SW 52ND AV	SW 88TH ST	SW 80TH ST
SW 88TH ST	SW 57TH AV	SW 52ND AV
SW 57TH AV	SW 88TH ST	SW 80TH ST
SW 67TH AV	SW 88TH ST	S DIXIE HY
SW 88TH ST	S DIXIE HY	SW 67TH AV
SW 57TH AV	SW 88TH ST	S OF SW 87TH ST
SW 88TH ST	SW 67TH AV	SW 57TH AV
SW 107TH AV	SW 88TH ST	SW 72ND ST
SW 117TH AV	SW 88TH ST	SW 80TH ST

2025 BICYCLE FACILITIES PLAN
PRIOIRTY IV - UNFUNDED ON-ROAD BYCIYCLE PROJECTS
CATEGORY II[1]

	Limits	
Project or Facility	**From**	**To**
SW 127TH AV	SW 88TH ST	SW 72ND ST
DADELAND BD	S DIXIE HY	SW 88TH ST
SW 137TH AV	SW 88TH ST	SW 72ND ST
SW 142ND AV	SW 88TH ST	SW 72ND ST
SW 147TH AV	SW 88TH ST	SW 80TH ST
SW 152ND AV	SW 88TH ST	SW 80TH ST
SW 157TH AV	SW 88TH ST	SW 80TH ST
SW 162ND AV	SW 88TH ST	SW 80TH ST
SW 94TH ST	SW 92ND AV	SW 87TH AV
SW 92ND AV	SW 94TH ST	SW 88TH ST
SW 94TH ST	SW 97TH AV	SW 92ND AV
SW 97TH AV	SW 94TH ST	SW 88TH ST
SW 107TH AV	SW 95TH ST	SW 88TH ST
SW 95TH ST	SW 112TH AV	SW 107TH AV
SW 112TH AV	SW 95TH ST	SW 88TH ST
SW 95TH ST	SW 117TH AV	SW 112TH AV
SW 117TH AV	SW 95TH ST	SW 88TH ST
HAMMOCKS BD	SW 96TH ST	SW 88TH ST
SW 142ND AV	SW 96TH ST	SW 88TH ST
SW 137TH AV	SW 96TH ST	SW 88TH ST
SW 96TH ST	SW 142ND AV	SW 137TH AV
SW 147TH AV	SW 96TH ST	SW 88TH ST
SW 96TH ST	HAMMOCKS BD	SW 147TH AV
SW 96TH ST	SW 147TH AV	SW 142ND AV
HAMMOCKS BD	SW 152ND AV	SW 96TH ST
SW 152ND AV	HAMMOCKS BD	SW88TH ST
SW 57TH AV	SW 104TH ST	SW 88TH ST
SW 104TH ST	SW 62ND AV	SW 57TH AV
SW 104TH ST	SW 67TH AV	SW 62ND AV
SW 67TH AV	SW 104TH ST	SW 96TH ST
SW 104TH ST	SW 72ND AV	SW 67TH AV
SW 72ND AV	SW 98TH ST	S DIXIE HY
SW 104TH ST	SW 77TH AV	SW 72ND AV
SW 104TH ST	S DIXIE HY	SW 77TH AV
SW 104TH ST	SW 82ND AV	S DIXIE HY
SW 82ND AV	SW 104TH ST	SW 88TH ST
SW 104TH ST	SW 87TH AV	SW 82ND AV

2025 BICYCLE FACILITIES PLAN
PRIOIRTY IV - UNFUNDED ON-ROAD BYCIYCLE PROJECTS
CATEGORY II[1]

	Limits	
Project or Facility	**From**	**To**
SW 104TH ST	SW 92ND AV	SW 87TH AV
SW 104TH ST	SW 97TH AV	SW 92ND AV
SW 97TH AV	SW 104TH ST	SW 94TH ST
SW 107TH AV	SW 104TH ST	SW 95TH ST
SW 104TH ST	SW 114TH PL	SW107TH AV
SW 104TH ST	SW 117TH AV	SW 113TH AV
SW 117TH AV	SW 104TH ST	SW 95TH ST
SW 104TH ST	SW 122ND AV	SW 117TH AV
SW 122ND AV	SW 92ND ST	SW 88TH ST
SW 104TH ST	SW 127TH AV	SW 122ND AV
SW 127TH AV	SW 104TH ST	SW 88TH ST
SW 104TH ST	SW 137TH AV	SW 127TH AV
SW 137TH AV	SW 104TH ST	SW 96TH ST
SW 104TH ST	SW 142ND AV	SW 137TH AV
SW 142ND AV	SW 104TH ST	SW 96TH ST
SW 104TH ST	KILLIAN PY	SW 97TH AV
KILLIAN PY	SW 107TH AV	S KENDALE BD
SW 104TH ST	SW 147TH AV	SW 142ND AV
SW 147TH AV	SW 104TH ST	SW 96TH ST
SW 104TH ST	SW HAMMOCKS BD	SW 147TH AV
HAMMOCKS BD	SW 104TH ST	SW 152ND AV
SW 104TH ST	SW 157TH AV	HAMMOCKS BD
SW 157TH AV	SW 104TH ST	SW 88TH ST
SW 167TH AV	SW 94TH ST	SW 88TH ST
SW 57TH AV	SW 111TH ST	SW 104TH ST
SW 62ND AV	SW 112TH ST	SW 104TH ST
KILLIAN PY	S KENDALE BD	SW 102ND AV
SW 67TH AV	SW 112TH ST	SW 104TH ST
SW 72ND AV	SW 112TH ST	SW 104TH ST
SW 77TH AV	SW 112TH ST	SW 104TH ST
SW 82ND AV	SW 112TH ST	SW 104TH ST
SW 92ND AV	SW 112TH ST	SW 104TH ST
SW 97TH AV	SW 112TH ST	SW 104TH ST
SW 102ND AV	SW 112TH ST	KILLIAN PY
KILLIAN PY	SW 102ND AV	SW 112TH ST
SW 117TH AV	SW 112TH ST	SW 104TH ST
OLD CUTLER RD	SW 105TH ST	SW 88TH ST

2025 BICYCLE FACILITIES PLAN
PRIOIRTY IV - UNFUNDED ON-ROAD BYCIYCLE PROJECTS
CATEGORY II[1]

	Limits	
Project or Facility	**From**	**To**
SW 57TH AV	OLD CUTLER RD	SW 111TH ST
SW 127TH AV	SW 112TH ST	SW 104TH ST
SW 137TH AV	SW 112TH ST	SW 104TH ST
SW 112TH ST	SW 132ND AV	SW 127TH AV
SW 112TH ST	SW 137TH AV	SW 132ND AV
SW 157TH AV	SW 154TH AV	SW 104TH ST
SW 122ND AV	SW 112TH ST	SW 104TH ST
SW 112TH ST	SW 127TH AV	SW 122ND AV
SW 57TH AV	MIRAMAR AV	OLD CUTLER RD
SW 120TH ST	SW 62ND AV	SW 57TH AV
SW 62ND AV	SW 120TH ST	SW 112TH ST
SW 120TH ST	SW 67TH AV	SW 62ND AV
SW 67TH AV	SW 120TH ST	SW 112TH ST
SW 120TH ST	SW 72ND AV	SW 67TH AV
SW 72ND AV	SW 120TH ST	SW 112TH ST
SW 120TH ST	SW 77TH AV	SW 72TH AV
SW 77TH AV	SW 120TH ST	SW 112TH ST
SW 120TH ST	SW 82ND AV	SW 77TH AV
SW 120TH ST	S DIXIE HY	SW 82ND AV
SW 120TH ST	SW 82ND RD	S DIXIE HY
SW 82ND AV	SW 120TH ST	SW 112TH ST
SW 147TH AV	SW 112TH ST	SW 104TH ST
SW 120TH ST	SW 84TH AV	SW 82ND AV
SW HAMMOCKS BD	SW 112TH TE	SW 147TH AV
SW 92ND AV	SW 120TH ST	SW 112TH ST
SW 97TH AV	SW 120TH ST	SW 112TH ST
SW 102ND AV	SW 120TH ST	SW 112TH ST
SW 107TH AV	SW 120TH ST	SW 112TH ST
SW 117TH AV	SW 120TH ST	SW 112TH ST
SW 122ND AV	SW 116TH LA	SW 112TH ST
SW 127TH AV	SW 120TH ST	SW 112TH ST
SW 132ND AV	SW 118TH ST	SW 112TH ST
SW 67TH AV	SW 124TH ST	SW 120TH ST
SW 137TH AV	SW 120TH ST	SW 112TH ST
SW 77TH AV	SW 124TH ST	SW 120TH ST
SW 124TH ST	SW 72ND AV	SW 67TH AV
SW 72ND AV	SW 124TH ST	SW 120TH ST

2025 BICYCLE FACILITIES PLAN
PRIOIRTY IV - UNFUNDED ON-ROAD BYCIYCLE PROJECTS
CATEGORY II[1]

	Limits	
Project or Facility	**From**	**To**
SW 124TH ST	SW 77TH AV	SW 72ND AV
SW 124TH ST	SW 82ND AV	SW 77TH AV
SW 82ND AV	SW 124TH ST	SW 120TH ST
SW 124TH ST	S DIXIE HY	SW 82ND AV
SW 120TH ST	SW 147TH AV	SW 137TH AV
SW 147TH AV	SW 120TH ST	SW HAMMOCKS BD
SW 124TH ST	SW 87TH AV	S DIXIE HY
SW 120TH ST	SW 152ND AV	SW 147TH AV
SW 124TH ST	SW 92ND AV	SW 87TH AV
SW 92ND AV	SW 124TH ST	SW 120TH ST
SW 124TH ST	SW 94TH AV	SW 92ND AV
SW 72ND AV	SW 128TH ST	SW 124TH ST
SW 128TH ST	SW 77TH AV	SW 72ND AV
SW 77TH AV	SW 128TH ST	SW 124TH ST
SW 128TH ST	SW 82ND AV	SW 77TH AV
SW 82ND AV	SW 128TH ST	SW 124TH ST
SW 128TH ST	S DIXIE HY	SW 82ND AV
SW 128TH ST	SW 87TH AV	S DIXIE HY
SW 128TH ST	SW 92ND AV	SW 87TH AV
SW 128TH ST	SW 97TH AV	SW 92ND AV
SW 97TH AV	SW 128TH ST	SW 120TH ST
CHAPMAN FIELD DR	SW 62ND AV	SW 67TH AV
SW 102ND AV	SW 128TH ST	SW 120TH ST
SW 128TH ST	SW 107TH AV	SW 102ND AV
SW 107TH AV	SW 128TH ST	SW 120TH ST
SW 137TH AV	SW 128TH ST	SW 120TH ST
SW 128TH ST	SW 137TH AV	SW 127TH AV
OLD CUTLER RD	SW LUGO AV	SW 120TH ST
CHAPMAN FIELD DR	SW 62ND AV	OLD CUTLER RD
SW 128TH ST	SW 117TH AV	SW 112TH AV
SW 117TH AV	SW 128TH ST	SW 120TH ST
SW 92ND AV	SW 134TH ST	SW 128TH ST
OLD CUTLER RD	SW 62ND AV	CHAPMAN FIELD DR
SW 62ND AV	SW 136TH ST	CHAPMAN FIELD DR
SW 136TH ST	SW 167TH AV	SW 62ND AV
SW 67TH AV	SW 136TH ST	SW 124TH ST
SW 136TH ST	SW 67TH CT	SW 67TH AV

2025 BICYCLE FACILITIES PLAN
PRIOIRTY IV - UNFUNDED ON-ROAD BYCIYCLE PROJECTS
CATEGORY II[1]

	Limits	
Project or Facility	**From**	**To**
SW 136TH ST	SW 72ND AV	SW 67TH CT
SW 72ND AV	SW 136TH ST	SW 128TH ST
SW 136TH ST	SW 77TH AV	SW 72ND AV
SW 77TH AV	SW 136TH ST	SW 128TH ST
SW 136TH ST	SW 82ND AV	SW 77TH AV
SW 82ND AV	SW 136TH ST	SW 128TH ST
SW 136TH ST	SW 92ND AV	S DIXIE HY
SW 136TH ST	S DIXIE HY	SW 82ND AV
SW 134TH ST	SW 136TH ST	SW 92ND AV
SW 97TH AV	SW 136TH ST	SW 128TH ST
SW 102ND AV	SW 136TH ST	SW 128TH ST
SW 136TH ST	SW 107TH AV	SW 102ND AV
SW 107TH AV	SW 136TH ST	SW 107TH AV
SW 136TH ST	SW 112TH AV	SW 107TH AV
SW 136TH ST	MADISON ST	HARRISON ST
SW 136TH ST	SW 116TH PL	MADISON ST
SW 117TH AV	SW 136TH ST	SW 128TH ST
SW 137TH AV	SW 136TH ST	SW 128TH ST
SW 136TH AV	SW 149TH AV	SW 137TH AV
SW 67TH AV	SW 144TH ST	SW 136TH ST
SW 144TH ST	OLD CUTLER RD	SW 67TH AV
OLD CUTLER RD	SW 144TH ST	SW 136TH ST
SW 144TH ST	SW 77TH AV	OLD CUTLER RD
SW 77TH AV	SW 144TH ST	SW 136TH ST
SW 144TH ST	SW 82ND AV	SW 77TH AV
SW 82ND AV	SW 144TH ST	SW 136TH ST
SW 144TH ST	SW 87TH AV	SW 82ND AV
SW 144TH ST	S DIXIE HY	SW 87TH AV
SW 144TH ST	SW 92ND AV	S DIXIE HY
SW 92ND AV	SW 144TH ST	SW 134TH ST
SW 144TH ST	SW 97TH AV	SW 92ND AV
SW 102ND AV	SW 145TH ST	SW 136TH ST
SW 117TH AV	LINCOLN BD	SW 136TH ST
MADISON ST	LINCOLN BD	SW 136TH ST
LINCOLN BD	SW 117TH AV	MADISON ST
LINCOLN BD	N OF SW BETHUNE DR	LINCOLN BD
LINCOLN BD	SW BETHUNE DR	LINCOLN BD

2025 BICYCLE FACILITIES PLAN
PRIOIRTY IV - UNFUNDED ON-ROAD BYCIYCLE PROJECTS
CATEGORY II[1]

	Limits	
Project or Facility	**From**	**To**
SW 152ND ST	OLD CUTLER RD	SW 67TH AV
OLD CUTLER RD	SW 152ND ST	SW 144TH ST
SW 152ND ST	SW 77TH AV	OLD CUTLER RD
SW 77TH AV	SW 152ND ST	SW 144TH ST
SW 152ND ST	SW 79TH AV	SW 77TH AV
SW 82ND AV	SW 152ND ST	SW 144TH ST
S DIXIE HY	SW 152ND ST	SW 144TH ST
SW 152ND ST	SW 87TH AV	SW 82ND AV
SW 87TH AV	SW 152ND AV	SW 144TH ST
SW 152ND ST	S DIXIE HY	SW 87TH AV
SW 152ND ST	SW 92ND AV	S DIXIE HY
SW 92ND AV	SW 152ND ST	SW 144TH ST
SW 152ND ST	SW 102ND AV	SW 92ND AV
SW 102ND AV	SW 152ND ST	SW 147TH TE
SW 152ND ST	SW 112TH AV	SW 107TH AV
LINCOLN BD	SW 152ND ST	SW BETHUNE DR
SW 152ND ST	SW 117TH AV	SW 112TH AV
SW 117TH AV	SW 152ND ST	LINCOLN BD
SW 152ND ST	SW 137TH AV	SW 117TH AV
SW 137TH AV	SW 152ND AV	SW 136TH ST
SW 152ND ST	SW 147TH AV	SW 137TH AV
SW 152ND ST	SW 152ND AV	SW 147TH AV
SW 77TH AV	SW 159TH ST	SW 152ND ST
SW 160TH ST	SW 107TH AV	SW 99TH AV
FAIRWAY HEIGHTS BD	SW 160TH ST	SW 152ND ST
SW 160TH ST	SW 112TH AV	SW 107TH AV
SW 112TH AV	SW 160TH ST	SW 152ND ST
S DIXIE HY	SW 164TH ST	SW 152ND ST
SW 160TH ST	SW 99TH AV	S DIXIE HY
SW 137TH AV	SW 160TH ST	SW 152ND ST
SW 147TH AV	SW 160TH ST	SW 152ND ST
SW 160TH ST	SW 147TH AV	SW 137TH AV
SW 160TH ST	SW 152ND AV	SW 147TH AV
SW 152ND AV	SW 160TH ST	SW 152ND ST
SW 160TH ST	SW 157TH AV	SW 152ND AV
SW 152ND AV	SW 160TH ST	SW 152ND ST
S DIXIE HY	N OF SW 168TH ST	SW 160TH ST

2025 BICYCLE FACILITIES PLAN
PRIOIRTY IV - UNFUNDED ON-ROAD BYCIYCLE PROJECTS
CATEGORY II[1]

	Limits	
Project or Facility	**From**	**To**
OLD CUTLER RD	SW 168TH ST	SW 152ND ST
SW 168TH ST	SW 82ND AV	OLD CUTLER RD
SW 82ND AV	SW 168TH ST	SW 152ND ST
SW 168TH ST	SW 87TH AV	SW 82ND AV
S DIXIE HY	SW 168TH ST	S OF SW 160TH ST
SW 168TH ST	S DIXIE HY	SW 87TH AV
S DIXIE HY	SW 168TH ST	S OF SW 160TH ST
SW 168TH ST	S DIXIE HY	S DIXIE HY
SW 168TH ST	SW 100TH AV	S DIXIE HY
SW 99TH AV	SW 168TH ST	SW 160TH ST
SW 168TH ST	SW 107TH AV	SW 99TH AV
SW 107TH AV	SW 168TH ST	SW 160TH ST
SW 168TH ST	SW 112TH AV	SW 107TH AV
SW 112TH AV	SW 168TH ST	SW 160TH ST
SW 168TH ST	SW 117TH AV	SW 112TH AV
SW 117TH AV	SW 168TH ST	SW 152ND ST
SW 147TH AV	SW 168TH ST	SW 160TH ST
SW 170TH ST	SW 152ND AV	SW 147TH ST
SW 152ND AV	SW168TH ST	SW 160TH ST
SW 170TH ST	SW 157TH AV	SW 152ND AV
SW 157TH AV	SW 168TH ST	SW 160TH ST
SW 168TH ST	SW 197TH AV	SW 177TH AV
S DIXIE HY	W DATURA ST	SW 168TH ST
SW 168TH ST	SW 237TH AV	SW 198TH AV
S DIXIE HY	SW 175TH TE	SW 168TH ST
W DATURA ST	S DIXIE HY	SW 97TH AV
SW 137TH AV	SW 176TH AV	SW 160TH AV
S DIXIE HY	SW 183RD ST	SW 175TH TE
S DIXIE HY	SW 183RD ST	W DATURA ST
OLD CUTLER RD	SW 184TH ST	SW 168TH ST
SW 184TH ST	SW CARIBBEAN BD	OLD CUTLER RD
SW 184TH ST	SW 87TH AV	SW CARBBEAN BD
SW 184TH ST	SW 97TH AV	SW 87TH AV
SW 97TH AV	SW 184TH ST	SW 175TH TE
SW 184TH ST	S DIXIE HY	SW 97TH AV
S DIXIE HY	SW 184TH ST	S DIXIE HY
SW 107TH AV	SW 184TH ST	SW 168TH ST

2025 BICYCLE FACILITIES PLAN
PRIOIRTY IV - UNFUNDED ON-ROAD BYCIYCLE PROJECTS
CATEGORY II[1]

	Limits	
Project or Facility	**From**	**To**
SW 184TH ST	SW 107TH AV	S DIXIE HY
SW 184TH ST	SW 112TH AV	SW 107TH AV
SW 112TH AV	SW 184TH ST	SW 168TH ST
SW 184TH ST	SW 112TH CT	SW 112TH AV
SW 184TH ST	SR 821 RAMP	SW 112TH CT
SW 184TH ST	SW 117TH AV	SR 821 RAMP
SW 117TH AV	SW 117TH TE	SW 168TH ST
SW 184TH ST	SW 122ND AV	SW 117TH AV
SW 122ND AV	SW 184TH ST	SW 168TH ST
SW 184TH ST	SW 127TH AV	SW 122ND AV
SW 184TH ST	SW 134TH AV	SW 127TH AV
SW 134TH AV	SW 184TH ST	SW 176TH ST
SW 184TH ST	SW 137TH AV	SW 134TH AV
SW 137TH AV	SW 184TH ST	SW 176TH ST
S DIXIE HY	SW 186TH ST	SW 184TH ST
SW 97TH AV	SW 186TH ST	SW 184TH ST
SW 186TH ST	S DIXIE HY	SW 97TH AV
SW 186TH ST	SW 107TH AV	S DIXIE HY
SW 107TH AV	SW 186TH ST	SW 184TH ST
SW 184TH ST	SW 147TH AV	SW 137TH AV
SW 147TH AV	SW 184TH ST	SW 168TH ST
SW 186TH ST	SR 821 RAMP	SW 107TH AV
SR 821 NB RAMP	SW 186TH ST	SW 184TH ST
SW 186TH ST	SW 113TH AV	SR 821 RAMP
SR 821 SB RAMP	SE 186	SW 184TH ST
SW 184TH ST	SW 157TH AV	SW 147TH AV
SW 157TH AV	SW 184TH ST	SW 168TH ST
CARIBBEAN BD	SW 87TH AV	SW 184TH ST
SW 184TH ST	SW 177TH AV	SW 157TH AV
SW 184TH ST	SW 187TH AV	SW 177TH AV
QUAIL ROOST DR	SW 117TH AV	SW 113TH AV
SW 117TH AV	QUAIL ROAST DR	SW 184TH ST
S DIXIE HY	MARLIN RD	SW 186TH ST
MARLIN RD	S DIXIE HY	SW 186TH ST
SW 192ND ST	SW 147TH AV	SW 137TH AV
SW 147TH AV	SW 192ND ST	SW 184TH ST
CARIBBEAN BD	FRANJO RD	SW 87TH AV

2025 BICYCLE FACILITIES PLAN
PRIOIRTY IV - UNFUNDED ON-ROAD BYCIYCLE PROJECTS
CATEGORY II[1]

	Limits	
Project or Facility	**From**	**To**
SW 97TH AV	BEL AIRE DR	SW 186TH ST
SW 192ND ST	SW 187TH AV	SW 177TH AV
SW 192ND ST	SW 194TH AV	SW 187TH AV
QUAIL ROOST DR	SW 122ND AV	SW 117TH AV
SW 122ND AV	QUAIL ROAST DR	SW 184TH ST
S DIXIE HY	SW 107TH AV	MARLIN RD
SW 122ND AV	SW 200TH ST	QUAIL ROAST DR
SW 117TH AV	SW 200TH ST	QUAIL ROAST DR
SW 200TH ST	SW 122ND AV	SW 117TH AV
CARIBBEAN BD	MARLIN RD	FRANJO RD
MARLIN RD	CARRIBEAN BD	BELVIEW DR
SW 127TH AV	SW 200TH ST	SW 184TH ST
SW 200TH ST	SW 134TH AV	SW 127TH AV
SW 200TH ST	SW 24TH CT	SW 122ND AV
QUAIL ROOST DR	SW 124TH CT	SW 122ND AV
SW 200TH ST	SW 127TH AV	SW 124TH CT
SW 200TH ST	SW 137TH AV	SW 134TH AV
SW 137TH AV	SW 200TH ST	SW 184TH ST
SW 200TH ST	SW 147TH AV	SW 137TH AV
SW 147TH AV	SW 200TH ST	SW 192ND ST
OLD CUTLER RD	SW 87TH AV	SW 184TH ST
SW 200TH ST	SW 157TH AV	SW 147TH AV
S DIXIE HY	CARRIBEAN BD	SW 107TH AV
SW 200TH ST	SW 117TH AV	SW 110TH CT
SW 200TH ST	SW 167TH AV	SW 157TH AV
SW 200TH ST	SW 177TH AV	SW 167TH AV
SW 200TH ST	SW 187TH AV	SW 177TH AV
SW 187TH AV	SW 200TH ST	SW 192ND ST
OLD CUTLER RD	FRANJO RD	SW 87TH AV
FRANJO RD	CARRIBEAN BD	OLD CUTLER RD
CARIBBEAN BD	S DIXIE HY	SR 821 ET
SW 107TH AV	CARRIBEAN BD	S DIXIE HY
CARIBBEAN BD	SR 821 ET	SW 107TH AV
CARIBBEAN BD	SW 821 NB ACCESS RD	MARLIN RD
S DIXIE HY	SW 112TH AV	CARIBBEAN BD
OLD CUTLER RD	MARLIN RD	FRANJO RD
MARLIN RD	OLD CUTLER RD	CARIBBEAN BD

2025 BICYCLE FACILITIES PLAN
PRIOIRTY IV - UNFUNDED ON-ROAD BYCIYCLE PROJECTS
CATEGORY II[1]

	Limits	
Project or Facility	**From**	**To**
SR 821 NB ACCESS RD	SR 821 ET	CARIBBEAN BD
SR 821 ET	SR 821 SB ACCESS RD	SR 821 NB ACCESS RD
SR 821 SB ACCESS RD	SW 211TH ST	CARIBBEAN BD
S DIXIE HY	SW 211TH ST	SW 112TH AV
SW 117TH AV	S DIXIE HY	SW 200TH ST
SW 112TH AV	SW 211TH ST	S DIXIE HY
SW 211TH ST	S DIXIE HY	DW 112TH AV
SW 211TH ST	SW 112TH AV	SR 821 SB ACCESS
SR 821 SB ACCESS RD	SW 216TH ST	SW 211TH ST
OLD CUTLER RD	SW 216TH ST	MARLIN RD
SR 821 NB ACCESS RD	SW 216TH ST	SR 821ET
SW 216TH ST	SW 107TH AV	SW 104TH CT
SW 216TH ST	SW 104TH CT	OLD CUTLER RD
SW 216TH ST	SW 112TH AV	SW 107TH AV
SW 112TH AV	SW 216TH ST	SW 211TH ST
S DIXIE HY	SW 216TH ST	SW 211TH ST
SW 216TH ST	S DIXIE HY	SW 112TH AV
SW 216TH ST	SW 127TH AV	SW 122ND AV
SW 127TH AV	SW 216TH ST	SW 200TH ST
SW 216TH ST	SW 134TH AV	SW 127TH AV
SW 134TH AV	SW 216TH ST	SW 200TH ST
SW 216TH ST	SW 137TH AV	SW 134TH AV
SW 216TH ST	SW 147TH AV	SW 137TH AV
SW 147TH AV	SW 216TH ST	SW 200TH ST
SW 167TH AV	SW 216TH ST	SW 200TH ST
SW 157TH AV	SW 204TH ST	SW 200TH ST
SW 216TH ST	SW 1767TH AV	SW 157TH AV
SW 216TH ST	SW 177TH AV	SW 167TH AV
SW 216TH ST	SW 182ND AV	SW 177TH AV
SW 216TH ST	SW 187TH AV	SW 182ND AV
SW 187TH AV	SW 216TH ST	SW 200TH ST
SW 216TH ST	SW 194TH AV	SW 187TH AV
SW 194TH AV	SW 216TH ST	SW 192ND ST
SW 216TH ST	SW 87TH AV	SW 85TH AV
SW 216TH ST	OLD CURLER RD	SW 92ND AV
SW 112TH AV	SW 220TH ST	SW 216TH ST
SW 220TH ST	SW 117TH AV	SW 112TH AV

2025 BICYCLE FACILITIES PLAN
PRIOIRTY IV - UNFUNDED ON-ROAD BYCIYCLE PROJECTS
CATEGORY II[1]

	Limits	
Project or Facility	**From**	**To**
SW 220TH ST	S DIXIE HY	SW 117TH AV
S DIXIE HY	SW 220TH ST	SW 216TH ST
OLD CUTLER RD	SW 224TH ST	SW 216TH ST
OLD CUTLER RD	SR 821 ET	OLD CUTLER RD
S DIXIE HY	BAILES RD	SW 220TH ST
SW 187TH AV	SW 224TH ST	SW 216TH ST
SW 224TH ST	SW 182ND AV	SW 177TH AV
BAILES RD	S DIXIE HY	SW 177TH AV
SW 97TH AV	SW 232ND ST	SW 224TH ST
SW 112TH AV	SW 232ND ST	SW 220TH ST
SW 232ND ST	BAILES RD	S ALLAPUTALI RD
SW 117TH AV	SW 232ND ST	BAILES RD
SW 232ND ST	SW 122ND AV	SW 117TH AV
S DIXIE HY	SW 232ND ST	BAILES RD
SW 147TH AV	SW 232ND ST	SW 216TH ST
SW 232ND ST	SW 134TH AV	OLD DIXIE HY
SW 134TH AV	SW 232ND ST	SW 216TH ST
SW 232ND ST	SW 137TH AV	SW 134TH AV
SW 232ND ST	SW 142ND AV	SW 137TH AV
SW 232ND ST	SW 147TH AV	SW 142ND AV
SW 232ND ST	SW 157TH AV	SW 147TH AV
SW 167TH AV	SW 232ND ST	SW 216TH ST
SW 232ND ST	SW 177TH AV	SW 167TH AV
SW 187TH AV	SW 232ND ST	SW 224TH ST
SW 232ND ST	SW 182ND AV	SW 177TH AV
SW 232ND ST	SW 187TH AV	SW 182ND AV
SW 194TH AV	SW 232ND ST	SW 216TH ST
SW 232ND ST	SW 194TH AV	SW 187TH AV
SW 232ND ST	SW 197TH AV	SW 194TH AV
SW 232ND ST	SW 207TH AV	SW 197TH AV
SW 207TH AV	SW 232ND ST	SW 216TH ST
SW 232ND ST	SW 217TH AV	SW 207TH AV
SW 248TH ST	SW 97TH AV	SW 87TH AV
SW 97TH AV	SW 248TH ST	SW 232ND ST
SW 112TH AV	SW 248TH ST	SW 232ND ST
SW 248TH ST	SW 107TH AV	SW 97TH AV
SW 117TH AV	SW 248TH ST	SW 232ND ST

2025 BICYCLE FACILITIES PLAN
PRIOIRTY IV - UNFUNDED ON-ROAD BYCIYCLE PROJECTS
CATEGORY II[1]

	Limits	
Project or Facility	**From**	**To**
SW 248TH ST	SW 112TH AV	SW 107TH AV
SW 248TH ST	SW 122ND AV	SW 117TH AV
SW 248TH ST	SW 127TH AV	SW 122ND AV
SW 127TH AV	SW 248TH ST	S DIXIE HY
SW 248TH ST	S DIXIE HY	SW 127TH AV
S DIXIE HY	SW 248TH ST	SW 232ND ST
SW 248TH ST	SW 137TH AV	S DIXIE HY
SW 248TH ST	SW 142ND AV	SW 137TH AV
SW 142ND AV	SW 248TH ST	SW 232ND ST
SW 248TH ST	SW 147TH AV	SW 142ND AV
SW 147TH AV	SW 248TH ST	SW 232ND ST
SW 248TH ST	SW 157TH AV	SW 147TH AV
SW 167TH AV	SW 248TH ST	SW 232ND ST
SW 248TH ST	SW 167TH AV	SW 157TH AV
SW 182ND AV	SW 248TH ST	SW 232ND ST
SW 248TH ST	SW 177TH AV	SW 167TH AV
SW 248TH ST	SW 182ND AV	SW 177TH AV
SW 248TH ST	SW 187TH AV	SW 182ND AV
SW 187TH AV	SW 248TH ST	SW 232ND ST
SW 248TH ST	SW 197TH AV	SW 187TH AV
SW 197TH AV	SW 248TH ST	SW 232ND ST
SW 248TH ST	SW 207TH AV	SW 202ND AV
SW 207TH AV	SW 248TH ST	SW 232ND ST
S DIXIE HY	SW 250TH AV	SW 248TH AV
SW 142ND AV	SW 256TH ST	SW 248TH ST
SW 147TH AV	SW 256TH ST	SW 248TH ST
SW 256TH ST	SW 157TH AV	SW 147TH AV
SW 187TH AV	SW 256TH ST	SW 248TH ST
SW 256TH ST	SW 182ND AV	SW 177TH AV
SW 182ND AV	SW 256TH ST	SW 248TH ST
SW 256TH ST	SW 187TH AV	SW 182ND AV
S DIXIE HY	HENDERSON ST	SW 137TH AV
S DIXIE HY	SW 264TH ST	HENDERSON AV
SW 137TH AV	SW 264TH ST	SW 250TH ST
S DIXIE HY	SW 264TH ST	HENDERSON AV
SW 264TH ST	SW 264TH ST	S DIXIE HY
SW 264TH ST	S DIXIE HY	SW 137TH AV

2025 BICYCLE FACILITIES PLAN
PRIOIRTY IV - UNFUNDED ON-ROAD BYCIYCLE PROJECTS
CATEGORY II[1]

	Limits	
Project or Facility	**From**	**To**
SW 264TH ST	SW 147TH AV	S DIXIE HY
SW 147TH AV	SW 264TH ST	SW 256TH ST
SW 264TH ST	SW 157TH AV	SW 147TH AV
SW 264TH ST	SW 167TH AV	SW 157TH AV
SW 167TH AV	SW 264TH ST	SW 248TH ST
SW 264TH ST	SW 264HT ST	SW 256TH ST
SW 187TH AV	SW 264TH ST	SW 256TH ST
SW 264TH ST	SW 182ND AV	SW 177TH AV
SW 182ND AV	SW 264TH ST	SW 256TH ST
SW 264TH ST	SW 187TH AV	SW 182ND AV
SW 264TH ST	SW 197TH AV	SW 187TH AV
SW 197TH AV	SW 264TH AV	SW 248TH ST
SW 264TH ST	SW 217TH AV	SW 197TH AV
S DIXIE HY	SW 146TH CT	SW 264TH ST
SW 147TH AV	OLD DIXIE HY	SW 264TH ST
SW 107TH AV	SW 268TH ST	SW 248TH ST
SW 268TH ST	SW 112TH AV	SW 107TH AV
SW 112TH AV	SW 268TH ST	SW 256TH ST
S DIXIE HY	SW 2ND ST	SW 264TH ST
SW 147TH AV	S DIXIE HY	OLD DIXIE HY
SW 268TH ST	SW 127TH AV	SW 119TH PL
SW 268TH ST	SW 157TH AV	SW 127TH AV
SW 137TH AV	SW 268TH ST	SW 264TH ST
SW 268TH ST	SW 2ND ST	SW 137TH AV
SW 137TH AV	SW 272ND ST	SW 268TH ST
S DIXIE HY	SW 272ND ST	SW 147TH AV
SW 272ND ST	OLD DIXIE HY	S DIXIE HY
S DIXIE HY	SW 272ND ST	SW 146TH CT
SW 272ND ST	SW 157TH AV	OLD DIXIE HY
SW 157TH AV	SW 272ND ST	SW 264TH ST
SW 272ND ST	SW 167TH AV	SW 157TH AV
SW 167TH AV	SW 272ND ST	SW 264TH ST
SW 272ND ST	SW 177TH AV	SW 167TH AV
SW 187TH AV	SW 272ND ST	SW 264TH ST
SW 272ND ST	SW 182ND AV	SW 177TH AV
SW 182ND AV	SW 272ND ST	SW 264TH ST
SW 272ND ST	SW 187TH AV	SW 182ND AV

2025 BICYCLE FACILITIES PLAN
PRIOIRTY IV - UNFUNDED ON-ROAD BYCIYCLE PROJECTS
CATEGORY II[1]

	Limits	
Project or Facility	**From**	**To**
SW 272ND ST	SW 197TH AV	SW 187TH AV
SW 197TH AV	SW 272ND ST	SW 264TH ST
SW 272ND ST	SW 207TH AV	SW 202ND AV
S DIXIE HY	SW 152ND AV	SW 272ND AV
SW 107TH AV	SW 280TH ST	SW 268TH ST
SW 112TH AV	SW 280TH ST	SW 268TH ST
SW 280TH ST	SW 127TH AV	SW 121ST ST
SW 127TH AV	SW 280TH ST	SW 268TH ST
SW 280TH ST	SW 132ND AV	SW 127TH AV
SW 104TH AV	SW 142ND CT	SW 138TH PL
OLD DIXIE HY	SW 280TH ST	SW 272ND ST
S DIXIE HY	SW 280TH ST	SW 152ND AV
SW 280TH ST	OLD DIXIE HY	S DIXIE HY
SW 280TH ST	SW 152ND AV	SW 147TH AV
SW 152ND AV	SW 280TH AV	S DIXIE HY
SW 280TH ST	S DIXIE HY	SW 152ND AV
SW 280TH ST	SW 157TH AV	OLD DIXIE HY
SW 280TH ST	SW 167TH AV	SW 157TH AV
SW 167TH AV	SW 280TH ST	SW 272ND ST
SW 280TH ST	SW 169TH CT	SW 167TH AV
SW 182ND AV	SW 280TH ST	SW 272ND ST
SW 280TH ST	SW 182ND AV	SW 177TH AV
SW 280TH ST	SW 187 TH AV	SW 182ND AV
SW 187TH AV	SW 280TH ST	SW 272ND ST
SW 280TH ST	SW 197TH AV	SW 187TH AV
SW 197TH AV	SW 280TH ST	SW 272ND ST
SW 280TH ST	SW 217TH AV	SW 197TH AV
SW 217TH AV	SW 280TH ST	SW 264TH ST
OLD DIXIE HY	SW 157TH AV	SW 280TH AV
SW 157TH AV	OLD DIXIE HY	SW 280TH ST
OLD DIXIE HY	SW 157TH AV	SW 157TH AV
S DIXIE HY	SW 157TH AV	SW 280TH AV
SW 157TH AV	ORANGE ST	OLD DIXIE HY
SW 137TH AV	SW 284TH ST	SW 272ND ST
SW 288TH ST	SW 147TH AV	SW 137TH AV
SW 147TH AV	SW 288TH AV	SW 280TH AV
OLD DIXIE HY	SW 288TH AV	SW 157TH AV

2025 BICYCLE FACILITIES PLAN
PRIOIRTY IV - UNFUNDED ON-ROAD BYCIYCLE PROJECTS
CATEGORY II[1]

	Limits	
Project or Facility	**From**	**To**
SW 157TH AV	SW 288TH AV	S DIXIE HY
SW 288TH ST	SW 152ND AV	SW 147TH AV
SW 152ND AV	SW 288TH ST	SW 280TH ST
SW 288TH ST	SW 157TH AV	SW 152ND AV SOUTH
SW 288TH ST	S DIXIE HY	SW 157TH AV
S DIXIE HY	SW 288TH ST	SW 157TH AV
SW 288TH ST	OLD DIXIE HY	S DIXIE HY
SW 167TH AV	SW 288TH ST	SW 280TH ST
SW 288TH ST	SW 167TH AV	OLD DIXIE HY
SW 288TH ST	SW 177TH AV	SW 172ND AV
SW 288TH ST	SW 182ND AV	SW 177TH AV
SW 182ND AV	SW 288TH ST	SW 280TH ST
SW 288TH ST	SW 187TH AV	SW 182ND AV
SW 187TH AV	SW 288TH ST	SW 280TH ST
SW 288TH ST	SW 197TH AV	SW 187TH AV
SW 197TH AV	SW 288TH ST	SW 280TH ST
SW 288TH ST	SW 207TH AV	SW 197TH AV
SW 217TH AV	N OF SW 292ND ST	SW 280TH ST
SW 147TH AV	SW 296TH ST	SW 288TH ST
S DIXIE HY	SW 296TH ST	SW 288TH ST
SW 296TH ST	S DIXIE HY	SW 162ND AV
SW 296TH ST	OLD DIXIE HY	S DIXIE HY
OLD DIXIE HY	SW 296TH ST	SW 288TH ST
SW 152ND AV	SW 296TH ST	SW 288TH ST
SW 296TH ST	SW 157TH AV	SW 152ND AV
SW 157TH AV	SW 296TH ST	SW 288TH ST
SW 296TH ST	SW 162ND AV	SW 157TH AV
SW 296TH ST	SW 167TH AV	OLD DIXIE HY
SW 167TH AV	SW 296TH ST	SW 288TH ST
SW 296TH ST	SW 177TH AV	SW 172ND AV
SW 296TH ST	SW 187TH AV	SW 6TH AV
SW 187TH AV	SW 296TH ST	SW 288TH ST
SW 296TH ST	SW 197TH AV	SW 187TH AV
SW 197TH AV	SW 296TH ST	SW 288TH ST
SW 296TH ST	SW 217TH AV	SW 197TH AV
OLD DIXIE HY	SW 167TH AV	SW 296TH ST
SW 167TH AV	OLD DIXIE HY	SW 296TH ST

2025 BICYCLE FACILITIES PLAN
PRIOIRTY IV - UNFUNDED ON-ROAD BYCIYCLE PROJECTS
CATEGORY II[1]

	Limits	
Project or Facility	**From**	**To**
SW 157TH AV	SW 304TH ST	SW 296TH ST
SW 162ND AV	SW 304TH ST	SW 296TH ST
SW 304TH ST	SW 162ND AV	SW 157TH AV
SW 304TH ST	NE 12TH AV	SW 162ND AV
SW 304TH ST	OLD DIXIE HY	S DIXIE HY
OLD DIXIE HY	NE 15TH ST	SW 167TH AV
NE 15TH ST	N KRONE AV	OLD DIXIE HY
NW 14TH AV	NW 15TH ST	SW 296TH ST
NE 15TH ST	SW 187TH AV	NW 6TH AV
SW 304TH ST	NW 15TH ST	NE 15TH ST
SW 304TH ST	SW 197TH AV	NW 14TH AV
SW 197TH AV	SW 304TH ST	SW 296TH ST
SW 304TH ST	SW 202ND AV	SW 197TH AV
S DIXIE HY	S DIXIE HY	NE 12TH AV
SW 137TH AV	SW 512TH ST	SW 288TH ST
SW 312TH ST	SW 152ND AV	SW 137TH AV
SW 152ND AV	SW 296TH ST	S OF SW 308TH ST
SW 312TH ST	SR 821 ET	SW 152ND AV
SW 157TH AV	NE 8TH ST	SW 304TH ST
SW 312TH ST	SW 157TH AV	SW 152ND AV
S DIXIE HY	NE 8TH ST	N FLAGER AV
OLD DIXIE HY	NE 8TH ST	NE 15TH ST
NE 8TH ST	N FLAGLER AV	N HOMESTEAD BLVD
N FLAGLER AV	NE 8TH ST	S DIXIE HY
NE 8TH ST	NW 5TH AV	N FLAGER AV
NE 8TH ST	NE 18TH AV	SW 157TH AV
SW 162ND AV	SW 312TH ST	SW 304TH AV
NE 8TH ST	NE 12TH AV	NE 18TH AV
NE 12TH AV	NE 8TH ST	NE 15TH ST
NE 8TH ST	N HOMESTEAD BLVD	NE 12TH AV
NE 8TH ST	N KROME AV	NE 5TH AV
NW 8TH ST	NW 6TH AV	N KRONE AV
NW 14TH AV	SW 312TH ST	NW 15TH ST
SW 320TH ST	SW 137TH AV	SW 117TH AV
SW 137TH AV	SW 320TH ST	SW 312TH ST
SW 320TH ST	SW 152ND AV	SW 137TH AV
SW 152ND AV	SW 320TH ST	SW 312TH ST

2025 BICYCLE FACILITIES PLAN
PRIOIRTY IV - UNFUNDED ON-ROAD BYCIYCLE PROJECTS
CATEGORY II[1]

	Limits	
Project or Facility	**From**	**To**
SW 320TH ST	NE 18TH AV	SW 152ND AV
SW 162ND AV	E MOWRY DR	SW 312TH AV
NE 12TH AV	E MOWRY DR	NE 8TH ST
E MOWRY DR	SE 12TH AV	SW 162ND AV
E MOWRY DR	S HOMESTEAD BLVD	SE 12TH AV
S DIXIE HY	E MOWRY DR	NE 8TH ST
E MOWRY DR	N FLAGER	S HOMESTEAD
N FLAGLER AV	E MOWRY DR	NE 8TH ST
E MOWRY DR	S KRONE AV	S FLAGLER AV
W MOWRY DR	SW 6TH AV	S KRONE AV
NW 14TH AV	SW 320TH ST	SW 312TH ST
W MOWRY DR	SW 192ND AV	SW 187TH AV
SW 192ND AV	SW 320TH ST	SW 312TH ST
SW 320TH ST	SW 197TH AV	SW 192ND AV
SW 197TH AV	SW 320TH ST	SW 304TH ST
SW 320TH ST	SW 212TH AV	SW 197TH AV
SW 320TH ST	SW 217TH AV	SW 212TH AV
SW 217TH AV	SW 320TH ST	SW 296TH ST
S FLAGLER AV	S KRONE AV	E MOWER DR
SW 197TH AV	SW 525TH LN	SW 320TH ST
SW 328TH ST	SW 117TH AV	SW 97TH AV
SW 117TH AV	SW 328TH ST	SW 320TH ST
SW 162ND AV	SW 328TH ST	SW 320TH ST
SE 12TH AV	SW 328TH ST	SW 320TH ST
SW 328TH ST	SW 152ND AV	SW 137TH AV
SW 328TH ST	SE 12TH AV	SW 162ND AV
SW 328TH ST	SW 162ND AV	SW 152ND AV
SW 328TH ST	SE 6TH AV	SR 821 TE
S DIXIE HY	SE 8TH ST	NE 2ND ST
SE 8TH ST	N KRONE AV	S HOMESTEAD BD
SW 14TH AV	SW 8TH ST	SW 320TH ST
SW 192ND AV	SW 328TH ST	W MOWRY DR
SW 328TH ST	SW 192ND AV	LUCY ST
S DIXIE HY	NE DAVIS PKWY	SE 8TH ST
NE DAVIS PKWY	N KRONE AV	NE 2ND SVE
SW 137TH AV	SW 336TH ST	SW 328TH ST
SW 344TH ST	SW 137TH AV	SW 117TH AV

2025 BICYCLE FACILITIES PLAN
PRIOIRTY IV - UNFUNDED ON-ROAD BYCIYCLE PROJECTS
CATEGORY II[1]

	Limits	
Project or Facility	**From**	**To**
S DIXIE HY	E PALM DR	NE DAVIS PY
SW 14TH AV	SW 344TH ST	S REDLAND RD
W PALM DR	SW 14TH AV	SW LETH AV
SE 12TH AV	E PALM DR	SW 152ND AV
W PALM DR	S REDLAND RD	SW 6TH AV
SW 217TH AV	NW 183RD ST	NW 195TH ST
SW 344TH ST	NW 166TH ST	NW 167TH ST
SW 344TH ST	SW 192ND AV	N REDLAND RD
SW 192ND AV	SW 344TH ST	SW 308TH ST
SW 344TH ST	SW 214TH AV	SW 202ND AV
SW 14TH AV	SW 352ND ST	SW 344TH ST
S DIXIE HY	OLD CARD SOUND RD	SE 12TH AV
SW 192ND AV	SW 360TH ST	SW 344TH ST
SW 217TH AV	SW 360TH ST	SW 344TH ST
SW 217TH AV	SW 368TH ST	SW 360TH ST
INGRAHAM HY	SW 209TH AV	SW 200TH AV
E COUNTRY CLUB DR	S COUNTRY CLUB DR	N COUNTRY CLUB DR
W OKEECHOBEE RD	N KRONE AV	N OF NW 202ND ST
W OKEECHOBEE RD	NW 170TH ST	N KRONE AV
NW 17TH AV	NW 183RD ST	NW 195TH ST
NW 2ND AV	NW 167TH ST	NW 170TH ST
NW 17TH AV	NW 166TH ST	NW 167TH ST
NW 169TH ST	NW 77TH CT	NW 67TH AV
NW 17TH AV	NW 157TH ST	NW 167TH ST
NW 13TH AVE	NW 155TH DR	NW 167TH ST
N MIAMI LAKEWAY	MIAMI LAKES DR	NW 67TH AV
NW 7TH AV	NW 151ST ST	GOLDEN GLADES INTER
N MIAMI LAKEWAY	MIAMI LAKES DR	NW 67TH AV
SR 9 EX	NW 17TH AV	GOLDEN GLADES INTER
W OKEECHOBEE RD	NW 138TH ST	NW 170TH ST
SR 9 EX FRONTAGE RD	NW 27TH AV	SR 9 EX
NW 27TH AVE	SR 9 EX	SR 9 INTERCH
OKEECHOBEE FRONTAGE	W OKEECHOBEE RD	NW 170TH AV
W OKEECHOBEE RD	OKEECHOBEE FRONTAGE	NW 170TH AV
SANS SOUCI BD	BISCAYNE BD	NE 123RD ST
W OKEECHOBEE RD	NW 170TH AV	NW 116TH WY
E 65TH ST	DOUGLAS RDET	NW 32ND AV

2025 BICYCLE FACILITIES PLAN
PRIOIRTY IV - UNFUNDED ON-ROAD BYCIYCLE PROJECTS
CATEGORY II[1]

	Limits	
Project or Facility	**From**	**To**
W 60TH ST	W 16TH AV	W 12TH AV
E 53RD ST	PALM AV	E 4TH AV
W 53RD ST	W 4TH AV	PALM AV
W 53RD ST	W 16TH AV	W 12TH AV
NW 106TH ST	SR 821 HY	NW 116TH WY
W 18TH AV	W 44TH PL	W 49TH ST
W 44TH PL	W 8TH AV	W 4TH AV
NE 10TH AV	NE 82ND ST	NE 95TH ST
NE 87TH ST	NE 2ND AV	BISCAYNE BD
E 33RD ST	PALM AV	E 4TH AV
E 21ST ST	E 8TH AV	E 10TH AV
NW 72ND ST	NW 22ND AV	NW 19TH AV
PRAIRIE AV	ARTHUR GODFREY RD	W 47TH ST
NE 36TH ST	BISCAYNE BD	JULIA TUTTLE CR
PRAIRIE AV	W 28TH ST	ARTHUR GODFREY RD
MERIDIAN AV	15TH ST	17TH ST
NW 1ST PL	NW 11TH ST	NW 14TH ST
NW 34TH AV	NW 11TH ST	NW 14TH ST
PORT BD	BISCAYNE BD	ANTARTICA WY
W FLAGLER ST	NW 2ND CT	NW 2ND AV
SE 2ND ST	SE 2ND AV	NE 3RD AV
SE 2ND AV	SE 3RD ST	SE 2ND ST
TAMIAMIA BD	SW 8TH ST	SW 72ND AV
TIGERTAIL AV	SW 27TH AV	SW 22ND AV
SW 82ND AV	SW 43RD TE	SW 40TH ST
SW 92ND AV	SW 48TH ST	SW 40TH ST
SW 82ND AV	SW 72ND ST	N OF SW 64TH ST
SW 80TH ST	S DIXIE HY	SW 62ND AV
SW 113TH AV	SW 104TH ST	SW 96TH ST
SW 92ND AV	SW 99TH ST	SW 94TH ST
SW 112TH ST	SW 142ND AV	SW 137TH AV
SW HAMMOCKS BD	SW 112TH AV	SW 104TH ST
SW 112TH ST	SW 154TH AV	SW HAMMOCKS BD
SW 112TH ST	SW 161ST PL	SW 112TH ST
SW 120TH ST	SW 97TH AV	SW 92ND AV
SW 120TH ST	SW 107TH AV	SW 102ND AV
SW 62ND AV	CHAPMAN FIELD DR	SW 120TH ST

2025 BICYCLE FACILITIES PLAN
PRIOIRTY IV - UNFUNDED ON-ROAD BYCIYCLE PROJECTS
CATEGORY II[1]

	Limits	
Project or Facility	**From**	**To**
SW 136TH ST	SW 102ND AV	SW 97TH AV
SW 152ND AV	SW 152ND ST	SW 142ND ST
SW 87TH AV	SW 163RD TE	SW 152ND ST
SW 197TH AV	SW 192ND ST	SW 168TH ST
SW 122ND AV	SW 210TH ST	SW 200TH ST
SW 216TH ST	SW 157TH AV	SW 147TH AV
SW 216TH ST	SW 297TH AV	SW 194TH AV
SW 216TH ST	SW 213TH AV	SW 207TH AV
SW 117TH AV	BAILES RD	SW 220TH ST
SW 157TH AV	SW 232ND ST	SW 216TH ST
SW 232ND ST	SW 97TH AV	SW 87TH AV
SW 232ND ST	SW 127TH AV	SW 122ND AV
SW 232ND ST	SW 167TH AV	SW 157TH AV
SW 157TH AV	SW 248TH ST	SW 232ND ST
SW 122ND AV	SW 248TH ST	SW 232ND ST
SW 137TH AV	SW 248TH ST	SW 240TH ST
SW 248TH ST	SW 217TH AV	SW 207TH AV
SW 157TH AV	SW 256TH AV	SW 248TH AV
SW 157TH AV	SW 246TH ST	SW 256TH ST
SW 157TH AV	SW 280TH ST	SW 272ND ST
SW 127TH AV	BOUGAINVILLE BD	E PALM DR
SW 217TH AV	SW 296TH ST	SW 292ND ST
SW 107TH AV	SW 340TH ST	SW 280TH ST
S DIXIE HY	SW 304TH ST	SW 296TH ST
SW 328TH ST	SW 137TH AV	SW 117TH AV
SW 137TH AV	SW 328TH ST	SW 320TH ST
SW 152ND AV	SW 328TH ST	SW 320TH ST
LUCY ST	NW 6TH AV	S KRONE AV
S DIXIE HY	S KRONE AV	S OF SW 388TH ST
SW 368TH ST	SW 217TH AV	SW 212TH AV
OLD CARD SOUND RD	S DIXIE HY	S OF SW 408TH ST
NW 170TH ST	NW 87TH AV	NW 82ND AV
NW 202ND ST	NW 67TH AV	HONEY HILL RD
NW 199TH ST	HONEY HILL DR	NW 47TH AV
NW 215TH ST	N MIAMI AV	NE 2ND AV
NE 207TH ST	NW 207TH ST	NE 2ND AV
NE 199TH ST	NW 199TH ST	NE 2ND AV

2025 BICYCLE FACILITIES PLAN
PRIOIRTY IV - UNFUNDED ON-ROAD BYCIYCLE PROJECTS
CATEGORY II[1]

	Limits	
Project or Facility	**From**	**To**
NE 34TH AV	NE 207TH ST	AVENTURA HOSPITAL
NE 207TH ST	NE 208TH ST	NE 34TH AV
W COUNTRY CLUB DR	AVENTURA BD	N COUNTRY CLUB DR
N COUNTRY CLUB DR	NE 34TH AV	E COUNTRY CLUB DR
NE 191ST ST	NW 191ST ST	NE 2ND AV
NE 183RD ST	NW 183RD ST	NE 2ND AV
NE 199TH ST	NE 18TH AV	HIGHLAND LAKES BD
NE 199TH ST	HIGHLAND LAKES BD	NE 22ND AV
S COUNTRY CLUB DR	W COUNTRY CLUB DR	E COUNTRY CLUB DR
NE 187TH ST	BISCAYNE BD	NE 29TH AV
NW 154TH ST	NW 87TH AV	NW 82ND AV
NW 92ND AV	NW 97TH AV	W 84TH ST
NW 138TH ST	NW 170TH AV	NW 97TH AV
NW 47TH AV	NW 156TH ST	NW 157TH ST
NW 156TH ST	NW 47TH AV	NW 42ND AV
NW 42ND AV	NW 144TH ST	NW 145TH ST
NW 2ND AV	N BISCAYNE RIVER DR	NW 159TH ST
NW 19TH AV	NW 71ST ST	NW 72ND ST
NW 114TH ST	W 60TH ST	W 8TH AV
NW 119TH ST	W 65TH DR	W 4TH AV
E 40TH ST	E 8TH AV	E 10TH AV
NW 37TH AV	NW 79TH ST	NW 81ST ST
NW 81ST ST	NW 37TH AV	NW 36TH AV
NW 95TH ST	NW 36TH AV	NW 32ND AV
NW 71ST ST	E 17TH ST	NW 37TH AV
NW 54TH ST	HIALEAH DR	NW 37TH AV
NW 46TH ST	SE 8TH ST	NW 37TH AV
NW 66TH AV	NW 36TH ST	NW 38TH ST
NW 38TH ST	LUDLAM DR	NW 66TH AV
LENAPE DR	HUNTING LODGE DR	WESTWARD DR
HUNTING LODGE DR	NW 62ND AV	LENAPE DR
NW TAMIAMI CANAL RD	NW 69TH AV	NW 67TH AV
NW 7TH ST	NW 82ND AV	NW 79TH AV
SW 76TH CT	SW 19TH TE	SW 16TH ST
SW 82ND AVRD	S OF SW 58TH ST	SW 56TH ST
SW 75TH AV	SW 21ST ST	SW 74TH AVRD
SW 74TH AV	SW 74TH AVRD	SW 16TH ST

2025 BICYCLE FACILITIES PLAN
PRIOIRTY IV - UNFUNDED ON-ROAD BYCIYCLE PROJECTS
CATEGORY II[1]

	Limits	
Project or Facility	**From**	**To**
NW 14TH ST	NW 112TH AV	NW 110TH AV
NW 112TH AV	NW 12TH ST	NW 14TH ST
NW 137TH AV	N OF SW 8TH ST	NW 6TH ST
NW 132ND AV	SW 132ND AV	NW 6TH ST
NW 127TH AV	SW 127TH AV	NW 6TH ST
NW 122ND AV	SW 122ND AV	NW 6TH ST
NW 6TH ST	NW 122ND AV	NW 118TH AV
SW 6TH ST	SW 122ND AV	SW 118TH AV
NW 7TH ST	NW 114TH AV	NW 112TH AV
NW 97TH AV	NW 17TH AV	NW 25TH ST
SW 26TH ST	SW 147TH AV	SW 139TH AV
SW 32ND ST	SW 142ND AV	SW 139TH AV
SW 47TH ST	SW 46TH LA	E MEADOW LAKE DR
SW 104TH ST	SW 232ND ST	SW 216TH ST
SW 97TH ST	SW 152ND ST	N OF COUNTRY WALK DR
SW 112TH AV	SW 163RD TE	SW 152ND ST
SW 122ND AV	SW 192ND ST	SW 168TH ST
SW 152ND ST	SW 216TH ST	SW 200TH ST
SW 176TH ST	SW 216TH ST	OLD CUTLER RD
SW 16TH AV	S DIXIE HY	SW 1ST AV
SW 13TH ST	SW 111TH AV	SW 10TH AV
NW 33RD AV	NW 21ST ST	NW SOUTH RIVER DR
NW 32ND AV	NW 17TH ST	NW 20TH ST
NW 18TH ST	NW 42ND CT	NW 42ND AV
NW 14TH ST	NW 45TH ST	NW 44TH AV
NW 44TH AV	NW 13TH ST	NW 14TH ST
NW 13TH ST	NW 45TH AV	NW 44TH AV
SW 44TH AV	SEGOVIA ST	SW 8TH ST
SW 37TH AV	INGRAHAM HY	MAIN HY
EDGEWATER DR	SW 42ND AV	INGRAHAM HY
SW 80TH ST	PONCE DE LEON BD	SW 47TH AV
SW 67TH AV	SW 152ND ST	SW 144TH ST
SW 97TH AV	SW 144TH ST	SW 136TH ST
SW 136TH ST	SW 97TH AV	SW 134TH ST
DADELAND MALL CR	DADELAND CR	SW 85TH ST
SW 70TH AV	S DIXIE HY	SW 85TH ST
FRANJO RD	BEL AIRE DR	CARIBBEAN BD

2025 BICYCLE FACILITIES PLAN
PRIOIRTY IV - UNFUNDED ON-ROAD BYCIYCLE PROJECTS
CATEGORY II[1]

	Limits	
Project or Facility	**From**	**To**
SW 168TH ST	SW 122ND AV	SW 117TH AV
W OLD CUTLER RD	S OF SW 408TH ST	SW 380TH ST
SW 224TH ST	OLD CUTLER RD	SW 97TH AV
BAILES RD	SW 117TH AV	SW 232ND ST
SW 280TH ST	SW 147TH AV	SW 142ND CT
SW 272ND ST	SW 138TH PL	SW 137TH AV
SW 288TH ST	SW 137TH AV	SW 127TH AV
SW 117TH AV	SW 320TH ST	SW 312TH ST
SW 312TH ST	SW 117TH AV	SW 112TH ST
SW 112TH AV	SW 312TH ST	SW 304TH ST
SW 304TH ST	SW112TH AV	SW 107TH AV
SW 117TH AV	SW 344TH ST	SW 328TH ST
SW 192ND AV	SW 376TH ST	SW 360TH ST
SW 376TH ST	INGRAHAM HY	SW 192ND AV
SW 217TH AV	SW 392ND ST	SW 368TH ST
SW 392ND ST	SW 217TH AV	INGRAHAM HY
SW 312TH ST	SW 192ND AV	SW 187TH AV
SW 217TH AV	SW 264TH ST	SW 248TH ST
SW 192ND ST	SW 197TH AV	SW 194TH AV
SW 216TH ST	SW 122ND AV	S DIXIE HY
SW 248TH ST	SW 117TH AV	SW 112TH AV
SW 72ND ST	SW 154TH AV	SW 152ND AV
SW 147TH AV	SW HAMMOCKS BD	SW112TH ST
SW 152ND ST	SW 107TH AV	SW 102ND AV
SW 117TH AV	SW 184TH ST	SW 177TH TE
SW 328TH ST	NE 1ST AV	SE 6TH AV
SW 268TH ST	SW 119TH PL	SW 112TH AV
SW 152ND AV	SW 312TH ST	SW 308TH ST
SW 137TH AV	SW 344TH ST	SW 336TH AV
SW 137TH AV	SW 288TH ST	SW 284TH ST
SW 112TH AV	SW 256TH ST	SW 248TH ST
SW 256TH ST	SW 147TH AV	SW 142ND AV
SW 288TH ST	SW 172ND AV	SW 167TH AV
SW 296TH ST	SW 172ND AV	SW 167TH AV
SW 296TH ST	NW 6TH AV	SW 177TH AV
W MOWRY DR	SW 187TH AV	SW 6TH AV
SW 344TH ST	SW 202ND AV	SW 172ND AV

2025 BICYCLE FACILITIES PLAN
PRIOIRTY IV - UNFUNDED ON-ROAD BYCIYCLE PROJECTS
CATEGORY II[1]

	Limits	
Project or Facility	**From**	**To**
W PALM DR	SW 6TH AV	SKAOME AV
LUCY ST	SW 187TH AV	NW 6TH AV
SW 360TH ST	SW 202ND AV	SW 192ND AV
SW 304TH ST	SW 204TH AV	SW 202ND AV
SW 368TH ST	SW 212TH AV	SW 207TH AV
NW 79TH AV	W FLAGLER ST	NW 2ND ST
NW 97TH AV	NW 12TH ST	NW 17TH ST
NW 97TH AV	NW 38TH ST	NW 41ST ST
NW 33RD ST	NW 104TH ST	NW 99TH PL
NW 33RD ST	NW 107TH AV	NW 104TH AV
NW 58TH ST	NW 74TH AV	NW 72ND AV
SW 57TH AV	SW 74TH ST	SW 72ND ST
SW 62ND AV	SW 80TH ST	SW 78TH ST
SW 67TH AV	SW 96TH ST	SW 88TH ST
SW 72ND AV	SW 104TH ST	SW 98TH ST
SW 92ND AV	SW 104TH ST	SW 102ND ST
NW 12TH AV	NW 175TH ST	NW 179TH ST
NW 135TH ST	NW 57TH AV	NW 47TH AV
E 25TH ST	W 4TH AV	E LETH AV
SW 117TH AV	SW 80TH ST	SW 72ND ST
SW 82ND AV	SW 48TH ST	SW 45TH ST
SW 16TH ST	SW 70TH AV	SW 67TH AV
SW 16TH ST	SW 74TH AV	SW 72ND AV
SW 76TH CT	SW 16TH ST	SW 12TH ST
SW 72ND ST	SW 57TH AV	YUMURI ST
SW 56TH ST	SW 62ND AV	SW 58TH AV
PONCE DE LEON BD	RIVIERA DR	SW 42ND AV
PONCE DE LEON BD	SW 42ND AV	OAK AV
SW 72ND AV	TAMIAMIA BD	W FLAGLER ST
SW 122ND AV	SW 10TH ST	SW 8TH ST
SW 142ND AV	SW 42ND ST	SW 37TH ST
S MEADOWLAKE DR	SW 152ND AV	SW 47TH ST
SW 56TH ST	SW 162ND AV	SW 157TH AV
SW 72ND ST	SW 169TH AV	SW 163RD AV
SW 152ND ST	SW 80TH AV	SW 79TH AV
SW 152ND ST	SW 82ND AV	SW 80TH AV
CARIBBEAN BD	SW 110TH CT	S DIXIE HY

2025 BICYCLE FACILITIES PLAN
PRIOIRTY IV - UNFUNDED ON-ROAD BYCIYCLE PROJECTS
CATEGORY II[1]

	Limits	
Project or Facility	**From**	**To**
MARLIN RD	SW 103RD CT	S DIXIE HY
SW 122ND AV	SW 104TH ST	SW 92ND ST
SW 167TH AV	SW 104TH ST	SW 94TH ST
SW 104TH ST	SW 162ND AV	SW 157TH AV
SW 112TH ST	SW 147TH AV	SW 142ND AV
SW 248TH ST	SW 202ND AV	SW 197TH AV
SW 272ND ST	SW 202ND AV	SW 197TH AV
NE 15TH ST	NW 6TH AV	N KRONE AV
NW 8TH ST	SW 187TH AV	NW 6TH AV
SR 9 EX	NW 22ND AV	NW 17TH AV
NW 16TH AV	NW 143RD ST	SOUTH RIVER DR
NW 151ST ST	SOUTH RIVER DR	NW 7TH AV
NW 151ST ST	N BISCAYNE RIVER DR	N MIAMI AV
NW 143RD ST	NW 16TH AV	NW 12TH AV
NE 151ST ST	NE 12TH AV	NE 14TH AV
NE 10TH AV	NE 121ST ST	NE 125TH ST
NE 121ST ST	NE 9TH AV	NE 10TH AV
HARDING AV	SURFSIDE BLVD	94TH ST
SW 25TH RD	SW 3RD AV	SW 5TH AV
SW 16TH ST	SW 16TH ST	SW 16TH ST
UNIVERSITY DR	SW 42ND AV	SALZEDO ST
MAIN HY	SW 57TH AV	FRANKLIN AV
NW 83RD ST	NW 2ND AV	NW 1ST PL
NW 2ND AV	NW 83RD ST	NW 85TH ST
NW 87TH ST	NW 36TH AV	NW 32ND AV
NW 36TH AV	NW 87TH ST	NW 95TH ST
OPA LOCKA BD	NW 19TH AV	NW 17TH AV
NW 45TH AV	NW 13TH ST	NW 14TH TE
NW 25TH ST	MILAM DAIRY RD	NW 72ND AV
NW 25TH ST	NW 72ND AV	NW 67TH AV
WESTWARD DR	ESPLANADE DR	CURTISS PY RNDABT
NW 9TH AV	N OF NW 19TH ST	NW 20TH ST
NW 12TH AV	NW 71ST ST	NW 73RD ST
NW 11TH ST	NW 2ND AV	NW 11TH TE
NW 11TH ST	NW 11TH TE	NW 1ST PL
NW 4TH ST	NORTH RIVER DR	NW 5TH AV
ALTON RD	DADE BD	N MICHIGAN AV

2025 BICYCLE FACILITIES PLAN
PRIOIRTY IV - UNFUNDED ON-ROAD BYCIYCLE PROJECTS
CATEGORY II[1]

	Limits	
Project or Facility	**From**	**To**
W 47TH ST	PRAIRIE AV	PINE TREE DR
W 28TH ST	MERIDIAN AV	PRAIRIE AV
MERIDIAN AV	DADE BD	W 28TH ST
PINE TREE DR	W 26TH ST	ARTHUR GODFREY RD
N ROYAL POINCIANA BD	DOVE AV	LENAPE DR
NW 82ND AV	NW 154TH ST	NW 162ND ST
NW 97TH AV	NW 87TH AV	SR 826
NW 215TH ST	FL TP	E OF FL TP
NW 215TH ST	E OF FL TP	NW 2ND AV
NE 215TH ST	NE 10TH AV	NE 12TH AV
NE 12TH AV	NE 196TH ST	NE 199TH ST
NE 10TH AV	NE 196TH ST	NE 199TH ST
NW 7TH AV	NW 7TH AVEX	NW 175TH ST
W DIXIE HY	NE 193RD ST	NE 203RD ST
NW 199TH ST	FL TP	NW 12TH AV
SW 216TH ST	SW 92ND AV	SW 87TH AV
ABBOTT AV	71ST ST	HARDING AV
OLD CUTLER RD	SW 57TH AV	SW 105TH ST
OLD CUTLER RD	CHAPMAN FIELD DR	SW 128TH ST

1. Bicycle Network segment not ranked as Candidate project.

2025 BICYCLE FACILITIES PLAN

PRIORITY IV - UNFUNDED GREENWAYS PROJECTS

Project or Facility	Limits	
	From	To
Atlantic Corridor E-W Connectors	S Point Dr	Broward County Line
Beacon	NW 137th Ave	NW 67th Ave
Biscayne	S Krome Av / Old Card Sound Rd	Old Cutler Rd
Black Creek	SW 87th Ave	Krome Ave
Collins Canal		
Commodore	SW 105th St	South end of Crandon Blvd
East-West	SW 8th St	Perimeter Rd
Everglades	NW 2nd Ave / SW 392nd St	SW 112th St
Flagler	NW 11th St	Broward County Line
Gold Coast	NW South River Dr	Broward County Line
Indian Creek	24 St	53 St
Keys	Monroe County Line (South)	SW 380th St
Lake Belt	SW 8th St	NW 170th St
Ludlum	SW 88th St / SW 85th St	S Waterway Dr
Memorial	W Okeechobee Rd	NE 9th Ave
Merrick	SW 117th Ave	Old Cutler Rd
Miccosukee	SR 821	Monroe County Line (West)
Miller	SW 132nd Ave	SW 117th Ave
Mowry	SW 227th Ave	SW 137th Ave

2025 BICYCLE FACILITIES PLAN

PRIORITY IV - UNFUNDED GREENWAYS PROJECTS

Project or Facility	Limits	
	From	To
Oleta	Arch Creek Rd	Oleta River State Rec Area
Perimeter1	NW Milam Dairy Rd	E Okeechobee Rd / NW South River Dr
Princeton	SW 207th St	SW 97th Ave
Snake Creek	W Okeechobee Rd	Collins Ave
Snapper Creek	SW 8th St	Old Cutler Rd
Southern Glades	SW 392nd St	S Dixie Hwy
Tallahassee Connector	SW 328th St	S Dixie Hwy
Turnpike	NW 25th St	NW 202nd St
Unity	W Okeechobee Rd	NE 4th Ave
West Kendall	SW 177th Ave	SW 8th St

Appendix B

Appendix B. Technical Appendix

Existing Conditions

2001 Study Bicycle Roadway Network

The 2001 Bicycle Road Network is based on the network developed for the 2025 Long Range Transportation Plan and any additional roads that were included in the 1997 Bicycle Plan. The following road classification types are included in the network:

- Divided Arterials (20X)
- Undivided Arterials (30X)
- Collectors (40X)
- One Way Facilities (60X)

The Bicycle Road Network does not include:

- Freeways (10X)
- Centroid Connectors (50X)
- Toll Roads (80X)
- Ramps (70X)

Upon field survey, there were several road segments included in the Road Network that were not available to inventory. These segments were removed from the Network and include:

- Dirt or unpaved roads
- Roads that have been closed
- Private roads
- Misclassified roads (road segments identified as freeways or ramps upon field survey)

Road segments that are not included in the 2025 LRTP network but included in the Bicycle Network are depicted on **Figure B1** and listed in **Table B1**.

2001 Bicycle Level of Service Analysis

The determination of the bicycle level of service (BLOS) for each segment of the Miami-Dade Network is based on the operational planning level of service methodologies adopted by FDOT for this purpose. The BLOS model identifies the bicycle level of service for a segment of the transportation network on a scale of A to F based on a numerical model score and shown in **Table B2**.

Bicycle LOS differs from the standard definition of level of service applied to the automobile mode in that level of service is not a function of congestion on the bicycle facility. The characteristics of the motorized traffic (vehicle volume, speed and type) that share the facility with the bicyclist are however, a factor in the perception of the quality of service provided.

Figure B1 : 2001 Bicycle Segments Analyzed in Addition to LRTP Network

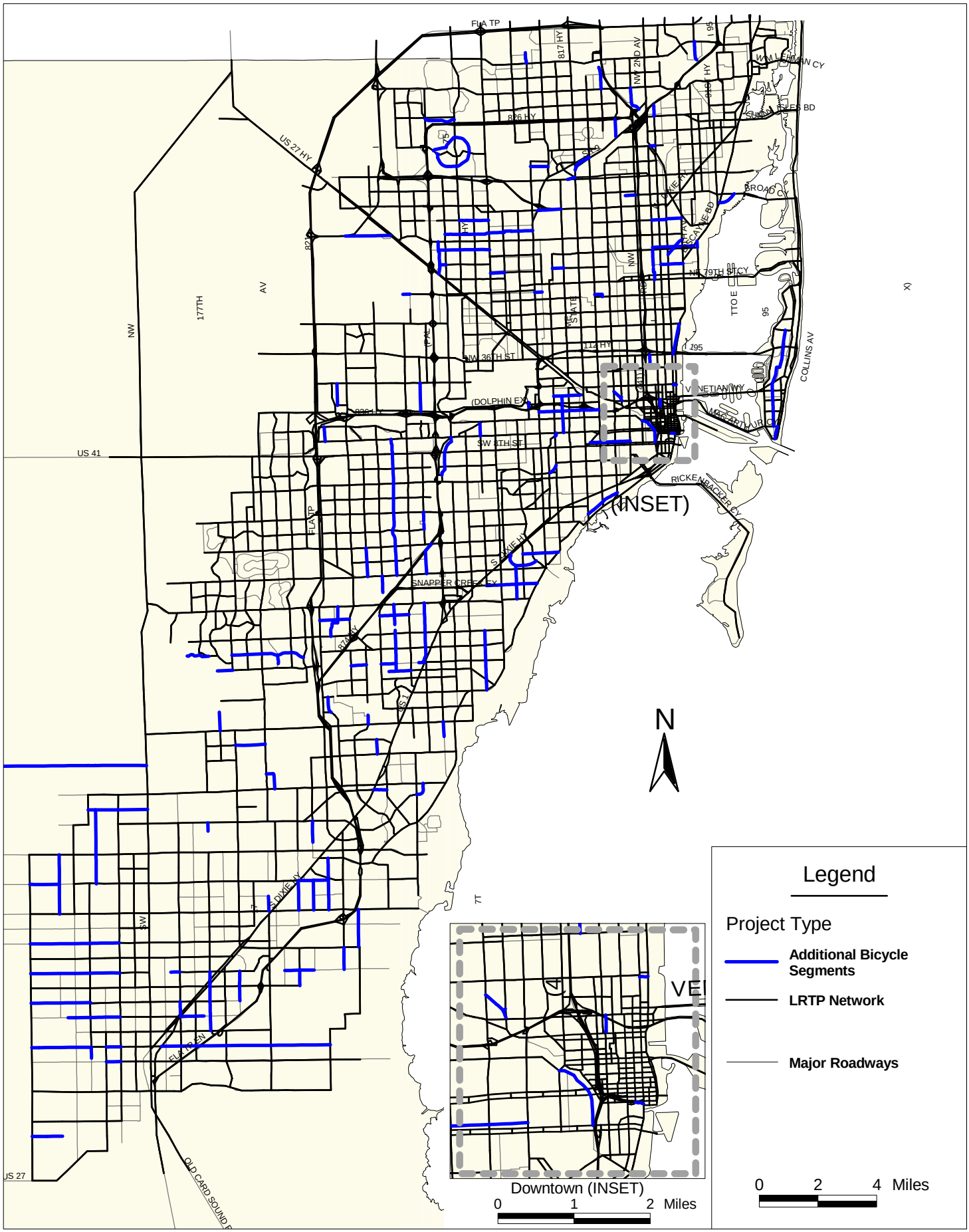

Table B1. Segments not Included in the 2025 LRTP Network

Project	Limits	
	From	To
Alhambra Cr	Alhambra Pz	SW 37th Ave
Alhambra Cr	S Dixie HY	Granada Bd
Caribbean Bd	SW 87th Ave	SW 184th St
Davis Rd	SW 47th Ave	Old Cutler Rd
E 21St St	E 8th Ave	E 10th Ave
E 53rd St	Palm Ave	E 8th Ave
E 65th St	Douglas Rd	NW 32nd Ave
E Mowry Dr	S Homestead Bd	SW 162nd Ave
E Mowry Dr	SW 192nd Ave	SW 187th Ave
Grand Concourse Ave	NE 2nd Ave	NE 6th Ave
Hardee Rd	Maynada St	SW 42nd Ave
Hardie Ave	SW 42nd Ave	Ingrham HY
Madison St	Lincoln Bd	SW 136th St
Meridian Ave	5th St	W 28th St
N Federal HY	NE 36th St	NE 54th St
N Miami Ave	NE 167th St	NE 173rd St
N Miami Lakeway	Miami Lakes Dr	NW 67th Ave
NE 10th Ave	NE 95th St	Biscayne Bd
NE 12th Ave	NE 109th St	NE 205th Te
NE 12th Ave	NE 196th St	NE 199th St
NE 19th Te	NE 2nd Ave	Biscayne Bd
NE 87th St	N Miami Ave	Biscayne Bd
NE 96th St	N Miami Ave	Biscayne Bd
NW 106th St	NW 116th Wy	NW South River Dr
NW 110th Ave	NW 14th St	NW 25th St

Table B1. Segments not Included in the 2025 LRTP Network (cont.)

Project	Limits	
	From	To
NW 111th St	NW 2nd Ave	NE 6th Ave
NW 112th Ave	W Flagler St	NW 7th St
NW 114th St	W 60th St	W 4th Ave
NW 11th St	NW 42nd Ave	NW 22nd Ave
NW 11th St	NW 11th Te	NW 1St Pl
NW 125th St	NW 11th Ave	NW 7th Ave
NW 13th Ave	NW 155th Dr	NW 167th St
NW 144th St	NW 42nd Ave	NW 37th Ave
NW 14th Ave	NW 14th St	NW 15th St
NW 151St St	N Biscayne River Dr	N Miami Ave
NW 15th St	NW 17th Ave	NW 14th Ave
NW 169th St	NW 77th CT	NW 67th Ave
NW 17th Ave	NW 183rd St	NW 195th St
NW 17th St	NW 37th Ave	Delaware PY
NW 19th Ave	NW 71St St	NW 72nd St
NW 1st Pl	NW 79th St	NW 83rd St
NW 1st Pl	NW 11th St	NW 14th St
NW 2nd Ave	NW 86th St	NW 95th St
NW 2nd Ave	NW 83rd St	NW 85th St
NW 34th Ave	W Flagler St	NW 17th St
NW 42nd Ave	NW 199th St	NW 204th St
NW 45th Ave	NW 13th St	NW 14th Te
NW 5th Ave	NW 29th St	NW 36th St
NW 62nd Ave	W Flagler St	NW Tamiami Canal
NW 72nd St	NW 22nd Ave	NW 19th Ave

Table B1. Segments not Included in the 2025 LRTP Network (cont.)

Project	Limits	
	From	To
NW 74th St	NW 87th Ave	NW 84th Ave
NW 7th Ave	NW 7th Ave	NW 183rd St
NW 82nd Ave	NW 12th St	NW 25th St
NW 83rd St	NW 2nd Ave	NW 1St Pl
NW 87th St	NW 36th Ave	NW 32nd Ave
NW 96th St	NW 2nd Ave	N Miami Ave
NW South River Dr	NW 5th St	SW South River Dr
Opa Locka Bd	NW 135th St	NW 27th Ave
Ponce de Leon Bd	SW 37th Ave	W Flagler St
Prairie Ave	W 28th St	W 47th St
S Miami Lakeway	NW 67th Ave	Miami Lakes Dr
Sans Souci Bd	Biscayne Bd	NE 123rd St
SE 4th St	SE 1St Ave	SE 2nd Ave
SR 9 EX	SR 9 EX	NW 22nd Ave
SR 9 EX	NW 27th Ave	NW 22nd Ave
SW 102nd Ave	SW 72nd St	SW 56th St
SW 102nd Ave	SW 152nd St	SW 147th Te
SW 107th Ave	SW 268th St	SW 248th St
SW 112th Ave	SW 95th St	SW 88th St
SW 112th Ave	SW 280th St	SW 268th St
SW 112th Ave	SW 163rd Te	SW 152nd St
SW 112th St	SW 147th Ave	SW 122nd Ave
SW 112th St	SW 161St Pl	SW 112th St
SW 113th Ave	SW 104th St	SW 96th St
SW 117th Ave	SW 248th St	SW 220th St

Table B1. Segments not Included in the 2025 LRTP Network (cont.)

Project	Limits	
	From	To
SW 120th St	SW 84th Ave	S Dixie HY
SW 120th St	SW 92nd Ave	SW 87th Ave
SW 120th St	SW 98th CT	SW 97th Ave
SW 120th St	SW 102nd Ave	SW 99th Ct
SW 120th St	SW 112th Ave	SW 107th Ave
SW 120th St	SW 152nd Ave	SW 147th Ave
SW 120th St	SW 97th Ave	SW 92nd Ave
SW 120th St	SW 107th Ave	SW 102nd Ave
SW 122nd Ave	SW 122nd Ave	SW 122nd Ave
SW 122nd Ave	SW 210th St	SW 200th St
SW 122nd Ave	SW 248th St	SW 232nd St
SW 124th St	SW 94th Ave	SW 87th Ave
SW 127th Ave	SW 248th St	S Dixie Hy
SW 127th Ave	Bougainville Bd	E Palm Dr
SW 132nd Ave	SW 118th St	SW 112th St
SW 134th Ave	SW 184th St	SW 176th St
SW 137th Ave	SW 248th St	SW 240th St
SW 147th Ave	SW 296th St	SW 280th Ave
SW 152nd Ave	SW 152nd St	SW 142nd St
SW 157th Ave	SW 204th St	SW 200th St
SW 157th Ave	Orange St	SW 280th St
SW 157th Ave	NE 8th St	S Dixie HY
SW 160th St	SW 147th Ave	SW 137th Ave
SW 167th Ave	Old Dixie HY	SW 296th St
SW 168th St	SW 197th Ave	SW 177th Ave

Table B1. Segments not Included in the 2025 LRTP Network (cont.)

Project	Limits	
	From	To
SW 168th St	SW 237th Ave	SW 198th Ave
SW 176th St	SW 216th St	Old Cutler Rd
SW 186th St	S Dixie HY	SW 97th Ave
SW 192nd St	SW 197th Ave	SW 177th Ave
SW 194th Ave	SW 232nd St	SW 192nd St
SW 197th Ave	SW 525th Ln	SW 320th St
SW 207th Ave	SW 248th St	SW 216th St
SW 232nd St	SW 127th Ave	SW 117th Ave
SW 232nd St	SW 217th Ave	SW 207th Ave
SW 264th St	SW 217th Ave	SW 187th Ave
SW 280th St	SW 132nd Ave	SW 121St St
SW 280th St	SW 169th Ct	SW 167th Ave
SW 280th St	SW 217th Ave	SW 187th Ave
SW 296th St	SW 217th Ave	SW 197th Ave
SW 304th St	NE 12th Ave	SW 157th Ave
SW 304th St	SW 204th Ave	NW 14th Ave
SW 320th St	NE 18th Ave	SW 117th Ave
SW 320th St	SW 217th Ave	SW 197th Ave
SW 328th St	SW 192nd Ave	Lucy St
SW 368th St	SW 217th Ave	SW 212th Ave
SW 368th St	SW 212th Ave	SW 207th Ave
SW 4th St	SW 7th St	SW 1St St
SW 52nd Ave	SW 88th St	SW 72nd St
SW 62nd Ave	SW 136th St	SW 104th St
SW 6th St	SW 22nd Ave	SW 12th Ave

Table B1. Segments not Included in the 2025 LRTP Network (cont.)

Project	Limits	
	From	To
SW 72nd Ave	Tamiami Bd	W Flagler St
SW 74th Ave	SW 19th Te	SW 8th St
SW 74th Ave	SW 21St St	SW 16th St
SW 77th Ave	SW 159th St	SW 152nd St
SW 80th St	SW 57th Ave	SW 47th Ave
SW 80th St	SW 62nd Ave	SW 57th Ave
SW 82nd Ave	SW 120th St	SW 88th St
SW 82nd Ave	SW 43rd Te	SW 40th St
SW 82nd Ave	SW 72nd St	N of SW 64th St
SW 82nd Ave	S OF SW 58th St	SW 56th St
SW 82nd Ave	SW 48th St	SW 45th St
SW 92nd Ave	SW 72nd St	W Flagler St
SW 92nd Ave	SW 99th St	SW 88th St
SW 92nd Ave	SW 124th St	SW 102nd St
SW 94th St	SW 97th Ave	SW 87th Ave
SW 95th St	SW 117th Ave	SW 107th Ave
SW 97th Ave	N Snapper Creek Dr	SW 72nd St
SW 97th St	SW 152nd St	N of Country Walk Dr N
SW 99th Ave	SW 168th St	SW 160th St
SW South River Dr	SW 1St St	NW South River Dr
Tamiami Bd	SW 8th St	SW 72nd Ave
Tigertail Ave	SW 27th Ave	SW 17th Ave
Trionfo St	SW 72nd St	Alhambra Cr
W 18th Ave	W Okeechobee	W 49th St
W 28th St	Meridian Ave	Prairie Ave

Table B1. Segments not Included in the 2025 LRTP Network (cont.)

Project	Limits	
	From	To
W 33rd St	W 4th Ave	Palm Ave
W 37th St	W 18th Ave	W 16th Ave
W 44th Pl	W 18th Ave	W 4th Ave
W 53rd St	W 16th Ave	Palm Ave
W 60th St	W 12th Ave	NW 114th St
Washington Ave	Alton Rd	5th St

Table B2. Bicycle Level of Service

Level of Service	Model Score
A	≤ 1.5
B	>1.5 and ≤ 2.5
C	> 2.5 and ≤ 3.5
D	> 3.5 and ≤ 4.5
E	>4.5 and ≤ 5.5
F	> 5.5

The BLOS model recognizes key factors that affect bicycle LOS as:

- Presence of a bike lane or paved shoulder
- Proximity of the bicyclist to the vehicular traffic
- Characteristics of the vehicular traffic
- Pavement condition

The most important variables are the average effective width of the outside through lane and the volume of motorized vehicles. The average effective width considers the width of the outside travel lane and the striped area for bicyclists, if provided.

The LOS determinations made using the BLOS model are not commensurate with the corresponding "letter grade" level of service long recognized in Florida for vehicles. Calibrated on the basis of the educational system grading structure, an LOS of D for the bicycle mode is not acceptable.

BLOS Model Requirements

Microsoft Excel® software is used to calculate the LOS score for each Road Network segment. BLOS software is compatible with any IBM- compatible machine with an 80486 processor or higher.

Data for following model variables requires specific field survey for each Roadway Segment to be analyzed:

- Number of directional through lanes
- Effective speed limit (Posted)
- FHWA's five point pavement surface condition rating
- Average effective width of outside through lane
- Total width of outside lane and shoulder pavement
- Percentage of segment with occupied on-street parking
- Width of paving between the outside lane stripe and the edge of pavement

Generally, data is available for the remaining following model variables:

- Volume of directional traffic in 15 minute time period
- Percentage of heavy vehicles

BLOS Traffic County Methodology

Existing traffic volumes (ADT) were obtained from the following sources:

- 1999 FDOT count stations
- 1998 Miami-Dade County (updated by 3% to 1999 counts)
- MPO supplied counts

Counts not available from the above sources were developed based on the volume to capacity (V/C) ratios for the Roadway Segments produced for the base year (1999) transportation model utilized for the 2025 Long Range Transportation Plan Update.

The average V/C ratio was used to determine the average daily traffic (ADT) volumes based on the number of lanes. The capacity assumptions are as follows:

- 2 lanes = 10,200 ADT LOS D Major City/County Roadway
- 4 lanes = 22, 600 ADT LOS D Major City/County Roadway
- 6 lanes = 47,500 ADT LOS D Major City/County Roadway
- 8 lanes = 49,700 ADT LOS D Class II Interrupted Flow Condition (more than 4.50 signals per mile)

Latent Demand Score (LDS)

The Latent Demand Model produces a score associated with each road segment that provides an indication of the potential for bicycle trips along the segment regardless of the status or condition of the cyclist environment.

In a metropolitan area, the number of trips between two areas is directly related to the number of trip productions (generators) in one area and the number of trip attractions (attractors) in the other area. Certain factors reduce or impede a decision to make a trip including the distance to be traveled, the condition of the facilities used to make the trip and the time it takes to make the trip. This is true regardless of the travel mode.

The decision to make a trip by bicycle is affected more by the impedance factors outlined above than travel by automobile. People are willing to cycle further distances for different trip purposes, such as work than for other trip purposes such as shopping.

Potential bicycle trips can be divided into two categories: trips that can be made entirely by bike and trips that include another mode of travel to reach the destination. The NPTS trip distance by trip purpose is used to classify trips as non-linked. The latent demand score produced by the Latent Demand Model represents potential non-linked trips.

The Latent Demand Model assesses the attributes of the decision to make a trip by biking using a gravity-based model that produces segment-based results. The model evaluates the four general trip types identified in the NPTS:

- Work Trips, including University Trips
- Shopping Trips
- School Trips
- Recreational/Social Trips

Bicycle Latent Demand Analysis

For each trip type, the location of the generators and attractors was determined. The individual location of the generators and attractors for school and social/recreation trips was identified and mapped. For work and shopping trips, aggregated data at the TAZ level is utilized to calculate the number of generators/attractors located proximate to a road segment. The 1999 Base Year ZDATA developed for the Miami-Dade County 2025 LRTP Update served as the basis for this assessment.

The LDS recognizes that the impact of distance on the direct relationship between the number of trip productions in one area and the number of trip attractions in the destination area is greater for the bicycle mode than for the auto mode. Latent bicycle trip activity is directly related to the frequency, magnitude and proximity of trip generators and attractors to a roadway segment. The Non-Linked Trips Latent Demand Score for a roadway segment is the sum of the individual trip purposes for each roadway corridor multiplied by their associated trip share from the National Personal

Transportation Survey (Number of Person Trips by Mode of Transportation and Trip Purpose, 1990 NPTS).

Table B3 identifies the spatial query and generators/attractors performed for each of the four trip types analyzed. Spatial queries for each trip purpose are depicted in **Figures B2** through **B6.** A brief description of each trip type is identified below.

Work Trips

Potential work trips are a function of the sum of all generators and attractors within the defined buffers reduced by the probability of making the trip at each buffer distance (impedance factor). Generators and attractors for a given roadway segment are estimated based on the population density and total employment within the Transportation Analysis Zone (TAZ) adjacent to the roadway segment.

Work trips also include trips to and from colleges and universities. The spatial analysis for university/college trips is activity based with the location of the colleges acting as the attractor. Trip generators are estimated using full-time enrollment (FTE) for a given college and the population within the TAZ.

Table B3. Generators and Attractors by Trip Type

TRIP TYPE	QUERY	GENERATORS & ATTRACTORS
Work Trips	Segment-based	TAZ Population Density
		Population in Buffer from TAZ Total Population
Work Trips – Colleges and Universities	Attractor-based	FTE – College and University
Shopping Trips	Segment –based	TAZ Total Employment
		Population in Buffer from TAZ Total Population
School Trips	Attractor-based	Average School Enrollment for School District
Recreational/Social Trips-Parks and Trail Heads	Segment –based	Total Number of Parks/Trail Heads
		Population in Buffer from TAZ Total Population
Recreational/Social Trips – Urban Trails	Attractor-based	Total Number of Urban Trails
		Population in Buffer from TAZ Total Population

Figure B2.
Work Trip Spatial Queries
(Segment-Based)

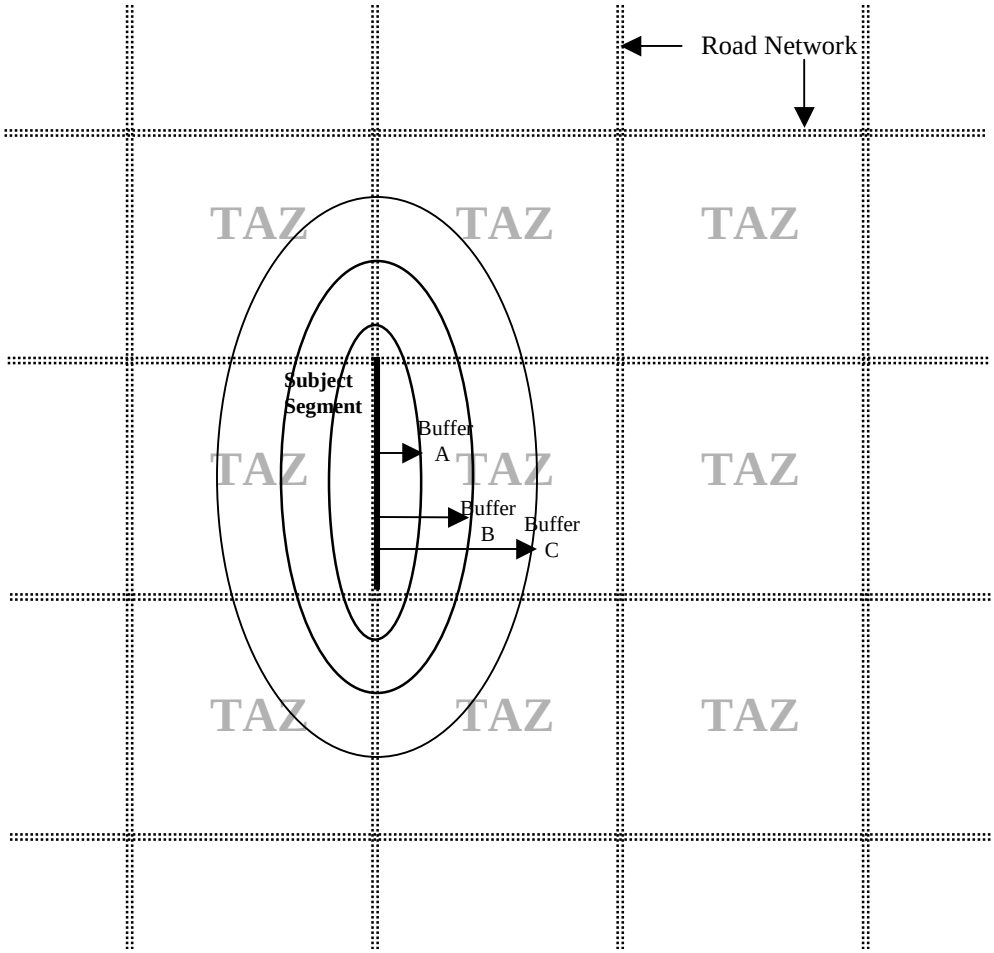

Potential work trips are estimated based on the following variables:

- 1999 Total employment within buffer
- Population within buffer

Figure B3.
Spatial Queries for Colleges and Universities
(Attractor-Based)

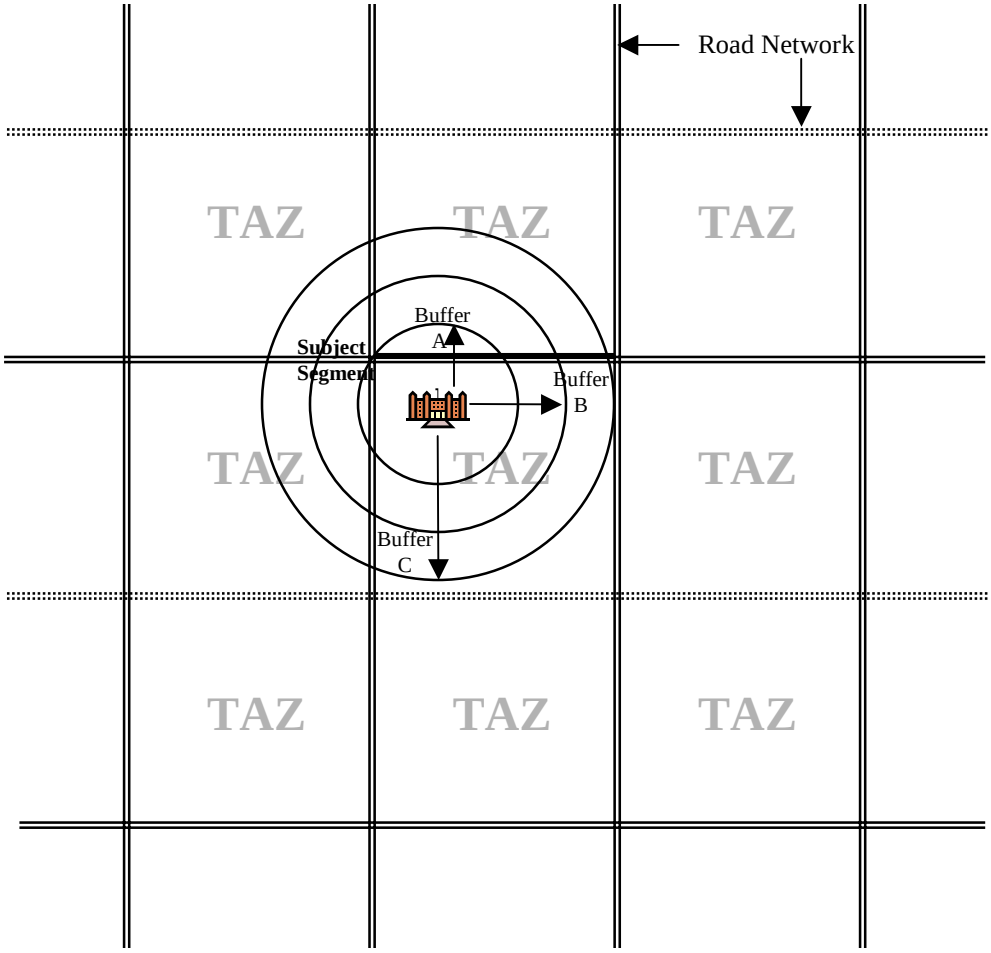

College and University are considered work trips rather than school trips due to similar trip characteristics. Potential work trips associated with colleges and universities are based on the following variables:

- 1999 Full-time enrollment of college or university
- Percent of segment within buffer

Figure B4.

Spatial Queries for Shopping and Errands

(Segment-Based)

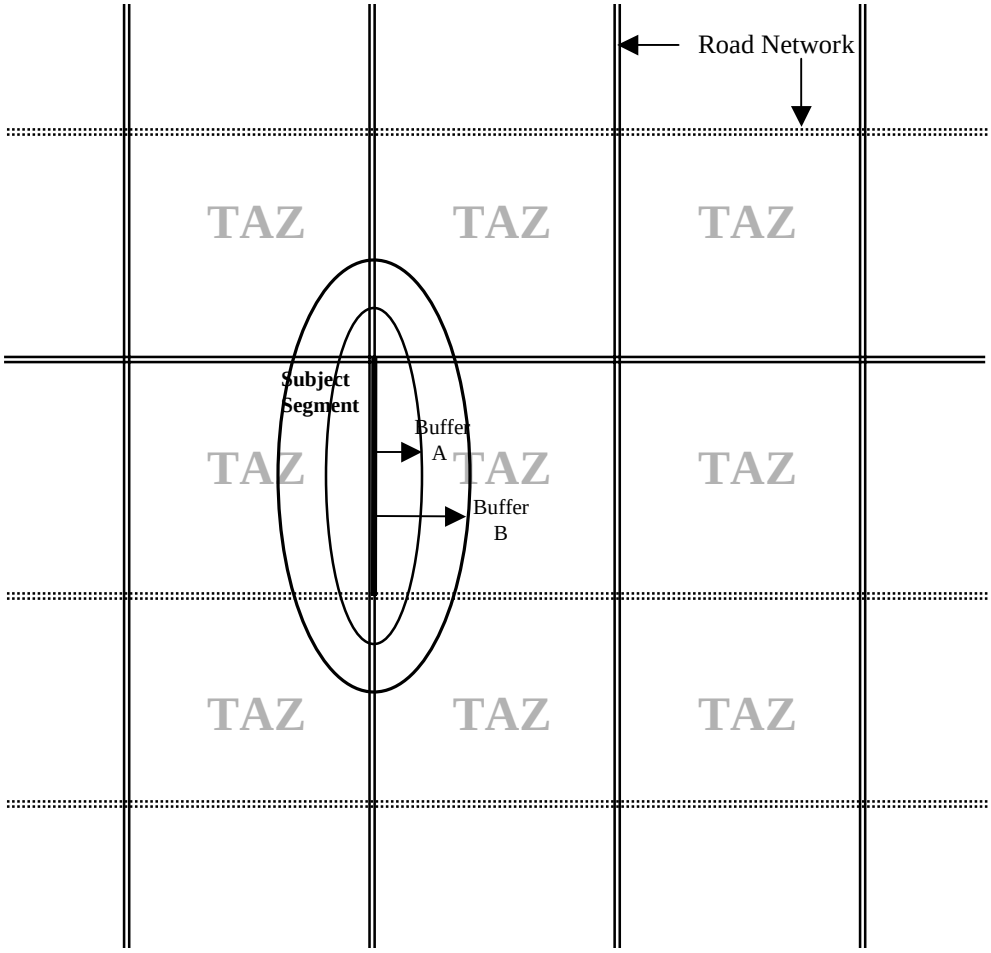

Shopping and errands include two distinct categories, work-based errands and home-based errands. Potential trips are based on the following variables:

- 1999 Total employment
- 1999 population within buffer

Figure B5.
Spatial Queries for School Trips
(Attractor-Based)

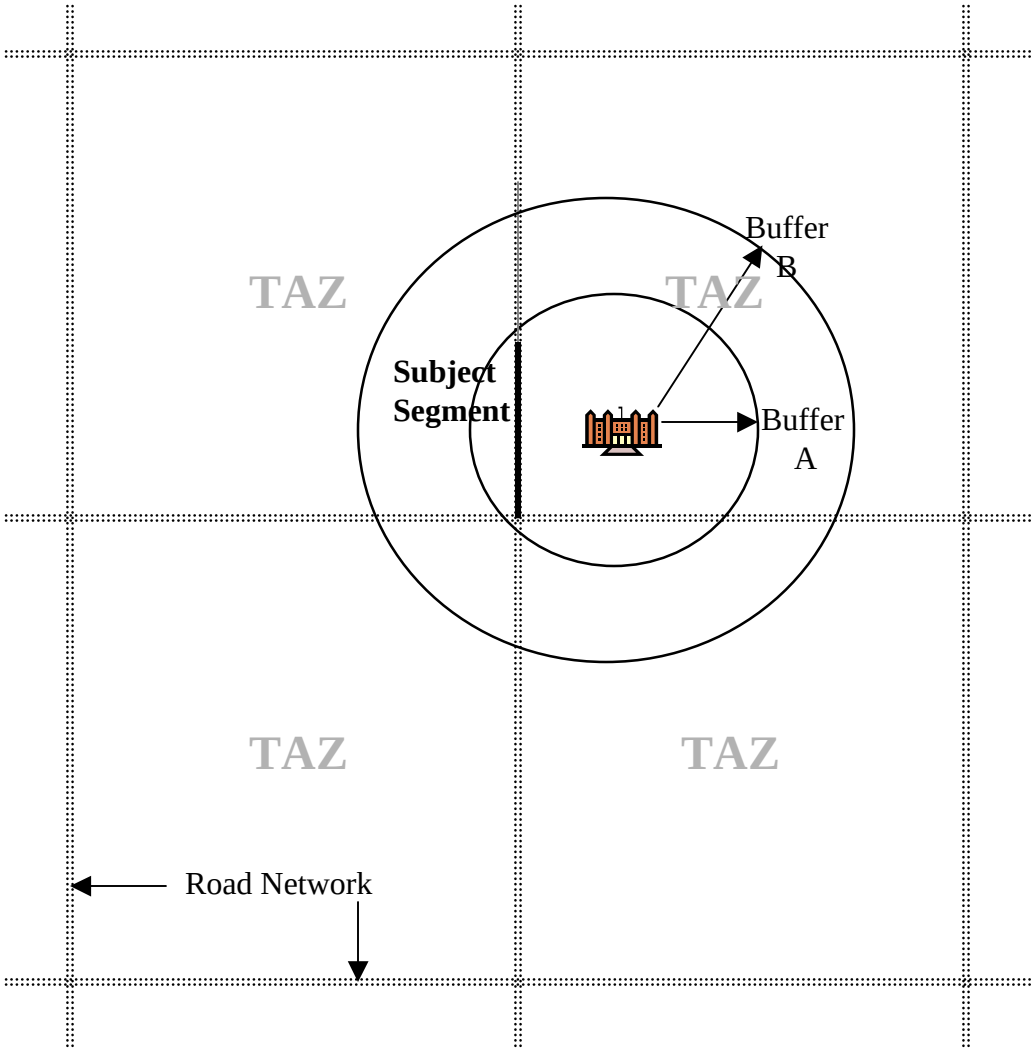

The locations of elementary, middle and senior high schools act as the attractor for potential school trips. Potential school trips are based on the following variables:

• 1999 Average school enrollment for Miami-Dade County public schools by type: elementary, middle and senior

• Percent of the road segment that falls within the buffer

Figure B6.
Spatial Queries for Parks and Trail Heads
(Segment-Based)

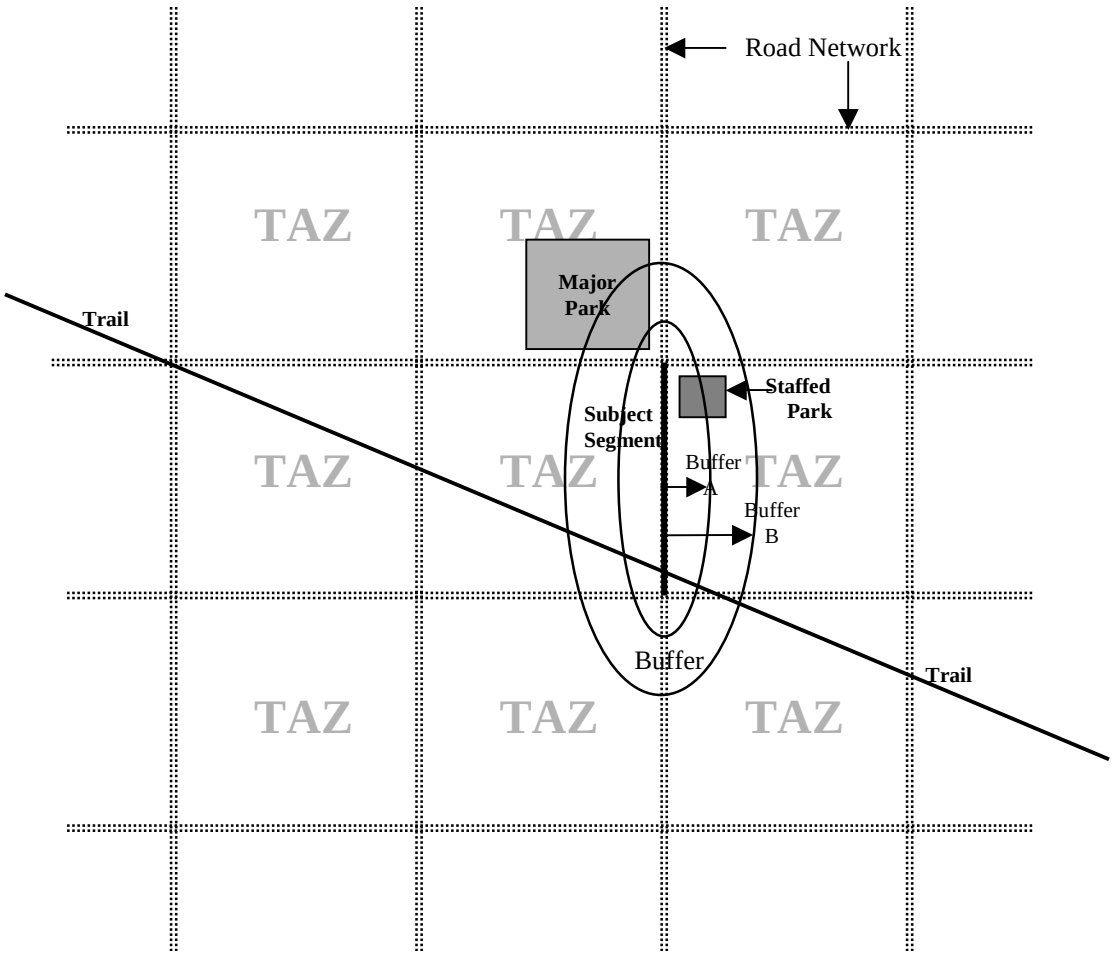

Public parks and trail heads are the attractors for recreational/social trips. Due to similar trip attraction potential, trail heads are classified as major parks. Potential recreational/social trips are based on the following variables:

- 1999 Population within the buffer
- Number of parks, by type, that fall within the buffer

Shopping and Errand Trips
Total shopping/errand trips are a function of the total number of generators and attractors within the adjacent TAZ for each buffer reduced by the impedance factor associated with each buffer. Like work trips, population is used to estimate the number of generators and employment is used to determine the number of attractors within a defined TAZ.

School Trips
School trips are a function of the sum of twice the average school enrollment multiplied by the percent of the segment within the buffer reduced by the impedance factor associated with each buffer.

Like works trips associated with universities or colleges, the spatial query is attractor-based with the attractor being the location of each school. Average school enrollment was calculated for each school type: elementary, middle and high schools.

Recreational and Social Trips
Public parks and trailheads are used to calculate potential recreational and social trips. Total trips are a function of the sum of all the trip generators/attractors within each buffer zone reduced by the impedance factor associated with each buffer. The location of each park/trailhead acts as the attractor and the total population within a TAZ is used to calculate potential generators.

Trips associated with each park are estimated based on the type of park being analyzed. Parks were classified in one of three categories, each assigned a different trip generation rate: major parks, staffed parks and minor parks. The average park size was calculated for each park type and multiplied by the corresponding trip generation rate. Trailheads were considered major parks and assigned the corresponding trip generation rate.

Candidate Projects Feasibility Assessment

A field review was conducted for each bicycle corridor identified on the Candidate Project List. Physical attributes of each corridor were evaluated for the feasibility of constructing bicycle facilities. Attributes such as lane width, right-of-way, curb and gutter configuration, median width, and shoulder width were recorded on a field inventory sheet. The constraints to implementation of a candidate project was documented. Roads in which an improvement could be made were documented along with the type of improvement recommended. An example of the field inventory sheets used in the assessment is provided as **Figure B7**.

Cost Estimates

General cost estimates derived were from the 1990 FDOT cost estimate guide based on the recommended improvement for each corridor identified. Costs were then adjusted based on local knowledge to reflect additional costs and impedances to implementation.

Figure B7. Bicycle Corridor Improvements Opportunity Inventory

Corridor _____

From_____ To_____

Characteristics:

Lanes (# and width): _____ Median(type):_____ Curb &Gutter_____

On Street Parking (type):_____ Shoulder (width):_____

Improvement Opportunities/Constraints:

- ❑ Insufficient ROW _____
- ❑ Paved Shoulder added to Rural Section
- ❑ Paved Shoulder added to Urban Section (relocate curb & gutter)
- ❑ Remove/Relocate On-Street Parking _____

  _____
- ❑ Restripe w/out Median Modification
- ❑ Restripe with Median Modification _____
- ❑ Streetscape Treatment (extensive)
- ❑ Road Diet (lane reduction)
- ❑ _____
- ❑ _____
- ❑ _____
- ❑ _____
- ❑ _____
- ❑ _____
- ❑ _____
- ❑ _____

Cost estimates were based on a unit cost for the following necessary improvements:

- Adding paved shoulder
- Milling and resurfacing
- Curb and gutter removal and replacement
- Traffic control and maintenance of traffic
- Safety improvements
- Light pole relocation
- Minor drainage improvements
- Drainage improvements

Review of Transportation Improvement Plan (TIP)

Projects included in the TIP have potential impact on bicycle improvements. The 2001 to 2005 TIP was reviewed for project significance. Construction projects to occur in the year 2001 or 2002 will not provide opportunities to incorporate bicycle improvements. Projects such as Intelligent Transportation Systems (ITS) do not provide opportunities for physical bicycle and pedestrian improvements. Resurfacing projects have the potential to affect only bicycle improvements.

Gannett Fleming

Jacksonville Miami Tampa