Route 54

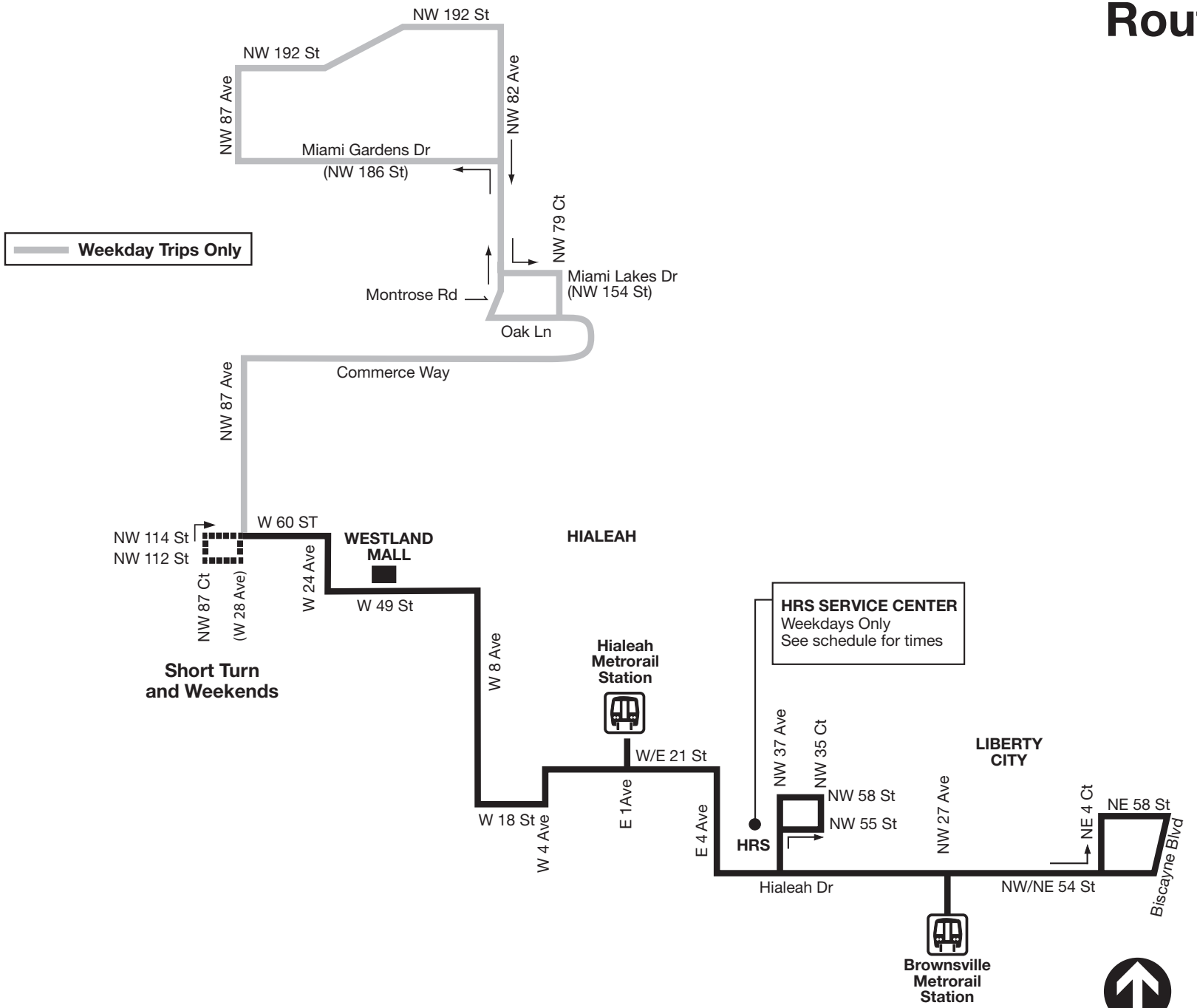

12/2009