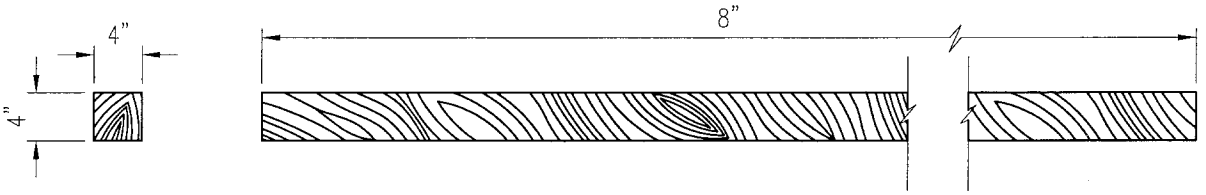

TOP BLOCK DETAIL

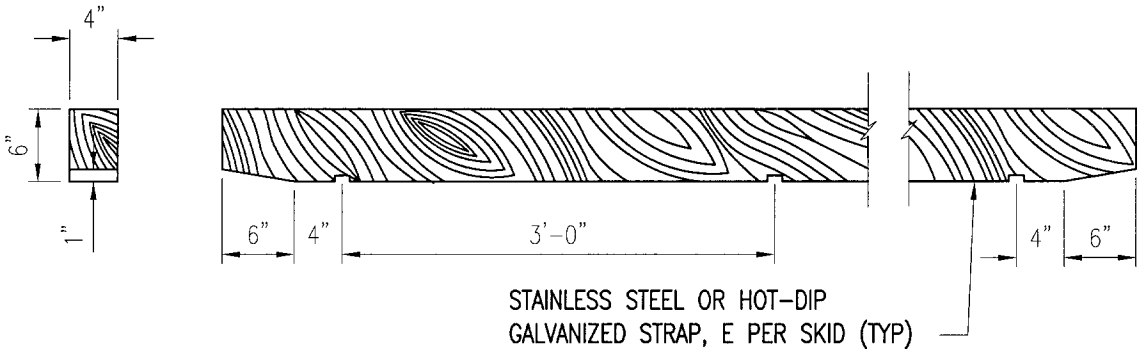

SKID DETAIL

NOTE:

REFER TO SPECIFICATION SECTION 15070 FOR MATERIAL FINISH AND ACCEPTABLE PRODUCTS.

ITEM	CROSS REF.	SPEC. REF.

ISSUE DATE	APPROVED BY
11/01/2006	V. E. F.

MIAMI-DADE COUNTY
Delivering Excellence Every Day

STANDARD DETAIL

WOOD BLOCK DETAILS
FOR CASING PIPE

A
8.0
SHEET 2 OF 2