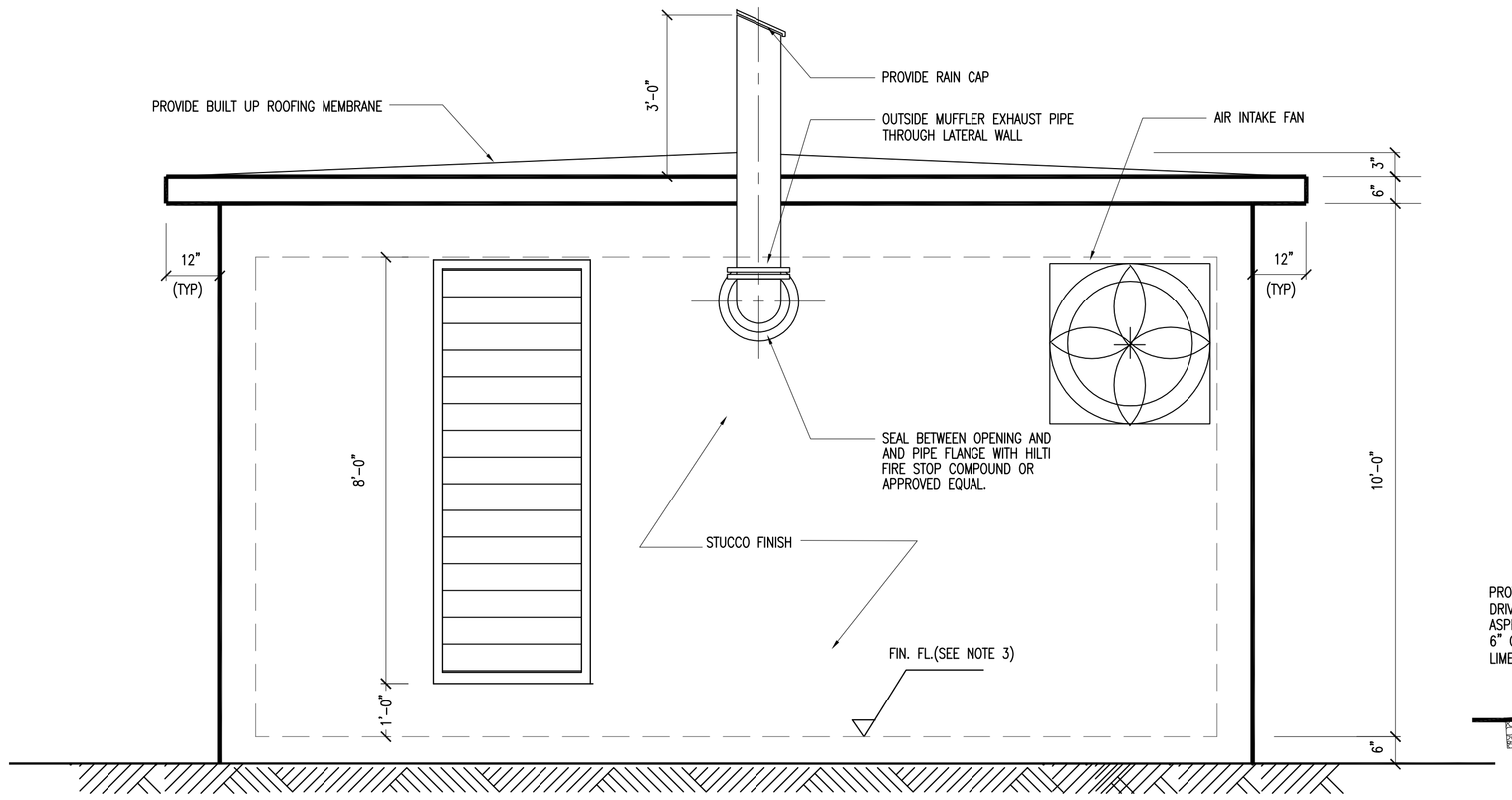

LEFT SIDE ELEVATION (B/-)

SCALE: 1/2"=1'-0"

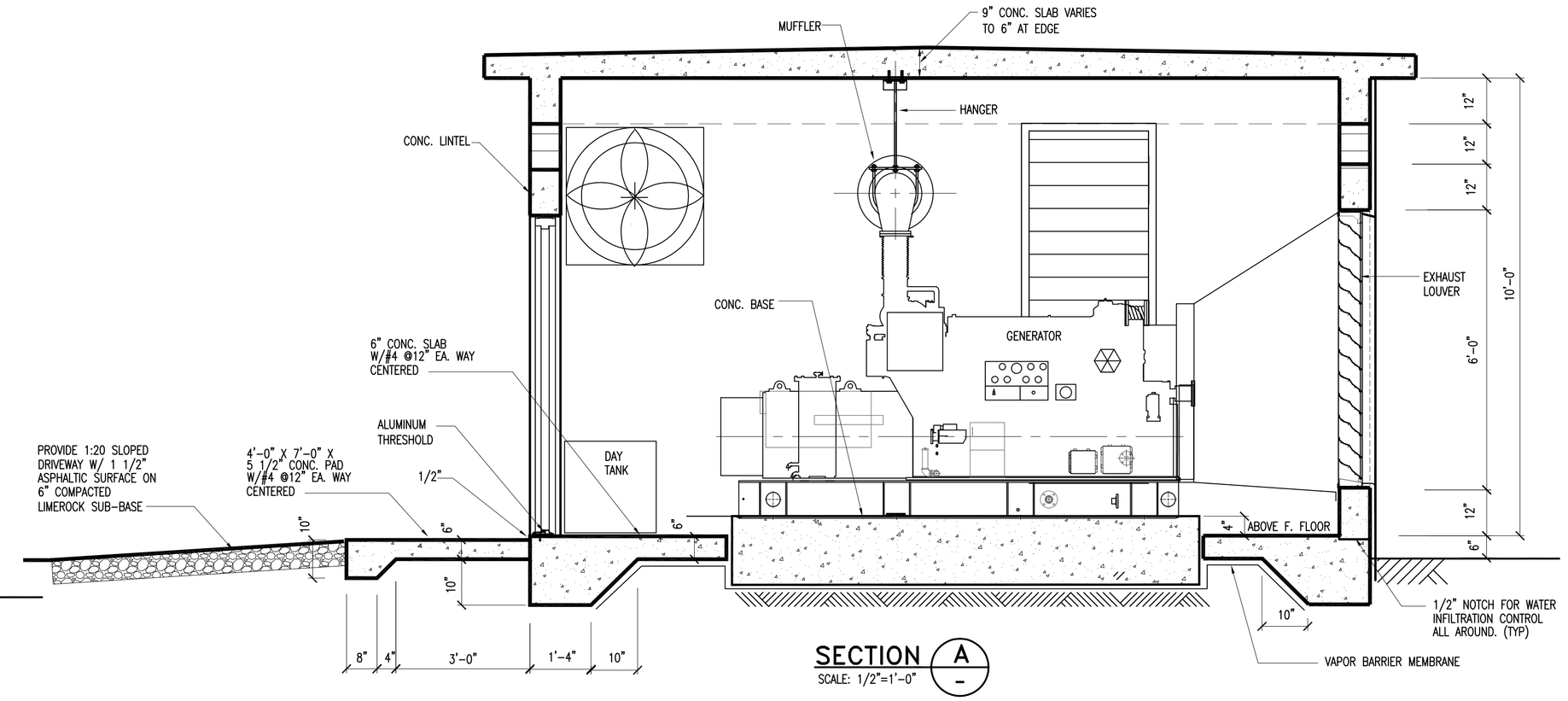

SECTION (A/-)

SCALE: 1/2"=1'-0"

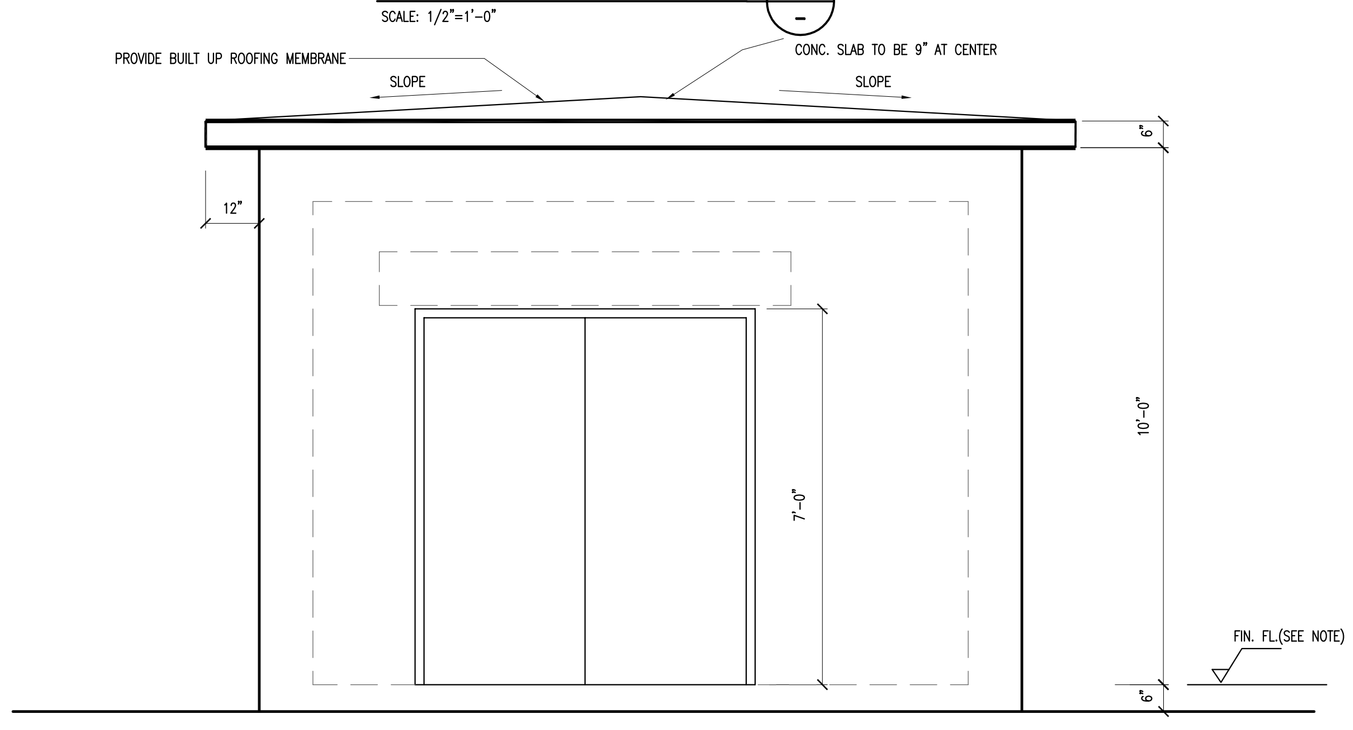

FRONT ELEVATION

SCALE: 1/2"=1'-0"

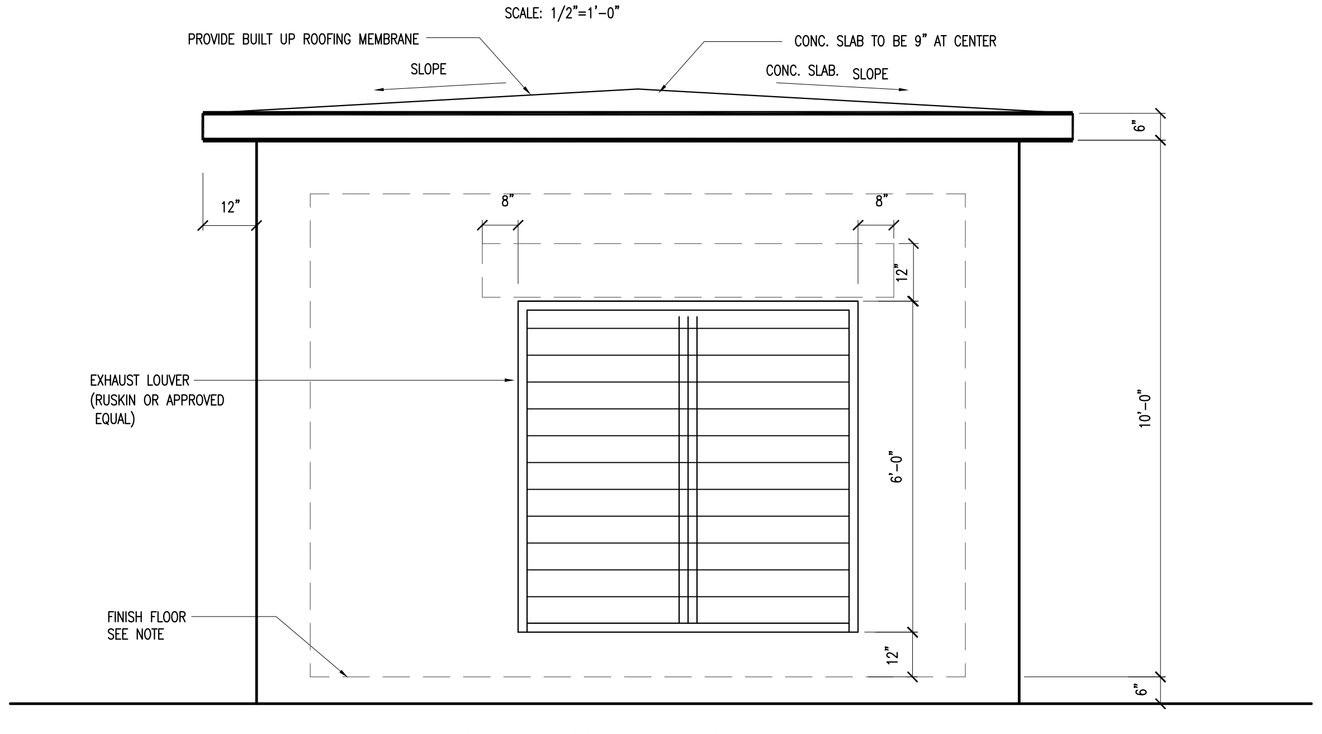

REAR ELEVATION

SCALE: 1/2"=1'-0"

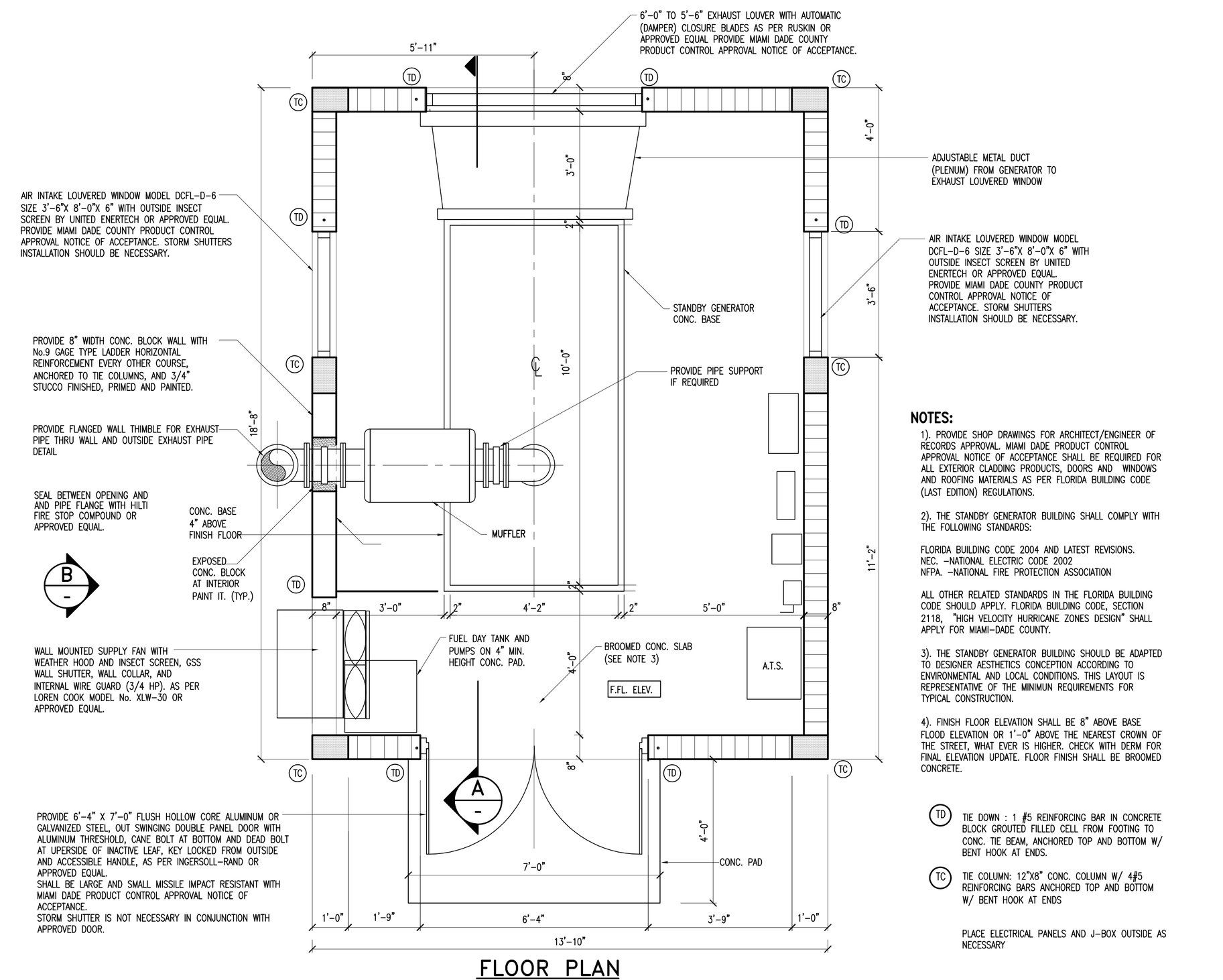

FLOOR PLAN

SCALE: 1/2"=1'-0"

NOTES:

1). PROVIDE SHOP DRAWINGS FOR ARCHITECT/ENGINEER OF RECORDS APPROVAL. MIAMI DADE PRODUCT CONTROL APPROVAL NOTICE OF ACCEPTANCE SHALL BE REQUIRED FOR ALL EXTERIOR CLADDING PRODUCTS, DOORS AND WINDOWS AND ROOFING MATERIALS AS PER FLORIDA BUILDING CODE (LAST EDITION) REGULATIONS.

2). THE STANDBY GENERATOR BUILDING SHALL COMPLY WITH THE FOLLOWING STANDARDS:

FLORIDA BUILDING CODE 2004 AND LATEST REVISIONS.
NEC. –NATIONAL ELECTRIC CODE 2002
NFPA. –NATIONAL FIRE PROTECTION ASSOCIATION

ALL OTHER RELATED STANDARDS IN THE FLORIDA BUILDING CODE SHOULD APPLY. FLORIDA BUILDING CODE, SECTION 2118, "HIGH VELOCITY HURRICANE ZONES DESIGN" SHALL APPLY FOR MIAMI–DADE COUNTY.

3). THE STANDBY GENERATOR BUILDING SHOULD BE ADAPTED TO DESIGNER AESTHETICS CONCEPTION ACCORDING TO ENVIRONMENTAL AND LOCAL CONDITIONS. THIS LAYOUT IS REPRESENTATIVE OF THE MINIMUM REQUIREMENTS FOR TYPICAL CONSTRUCTION.

4). FINISH FLOOR ELEVATION SHALL BE 8" ABOVE BASE FLOOD ELEVATION OR 1'-0" ABOVE THE NEAREST CROWN OF THE STREET, WHAT EVER IS HIGHER. CHECK WITH DERM FOR FINAL ELEVATION UPDATE. FLOOR FINISH SHALL BE BROOMED CONCRETE.

(TD) TIE DOWN : 1 #5 REINFORCING BAR IN CONCRETE BLOCK GROUTED FILLED CELL FROM FOOTING TO CONC. TIE BEAM, ANCHORED TOP AND BOTTOM W/ BENT HOOK AT ENDS.

(TC) TIE COLUMN: 12"X8" CONC. COLUMN W/ 4#5 REINFORCING BARS ANCHORED TOP AND BOTTOM W/ BENT HOOK AT ENDS

PLACE ELECTRICAL PANELS AND J–BOX OUTSIDE AS NECESSARY

MIAMI-DADE COUNTY
Delivering Excellence Every Day

WATER AND SEWER DEPARTMENT
ENGINEERING DIVISION

3071 SW 38TH AVENUE
MIAMI, FLORIDA 33146–2221
305–665 7471
miamidade.gov

PUMP STATION No. 0000
FACILITY OFFICIAL ADDRESS, FLORIDA 33100–0000
TYPICAL SUBMERSIBLE SEWAGE PUMP STATION
(WASD DESIGN STANDARD UPDATE 2008)

EMERGENCY GENERATOR BUILDING
FLOOR PLAN, SECTIONS AND DETAILS

DRAWING HISTORY

RELEASED FOR	DATE	BY
REVIEW 30%		
REVIEW 70%		
REVIEW 100%		
PERMIT		

REVISIONS

No.	DESCRIPTION	DATE	BY
△			

APPROVALS

CHIEF ENGINEER:	
SECTION HEAD:	
PROJECT MGR.:	
DESIGNED: X.X.X.	CHECKED: X.X.X.
DRAWN: X.X.X.	FINAL CHECK: X.X.X.

XXXXXXX XXXXX, P.E.
XXXXXXXXXX Engineer
State of Florida – License No. 00000
Date:_____

ER No. : 00000

FILE NAME: 00000X00.DWG

DATE:MAR. 06, 2009 | SCALE: AS NOTED

SHEET A–1

DWG. No. S–00000–A

M:\0_Design_Section_Standards_CAD\Submersible PS\2009 Submersible PS\WASD PS A01.dwg, 3/17/2009 10:16:14 AM