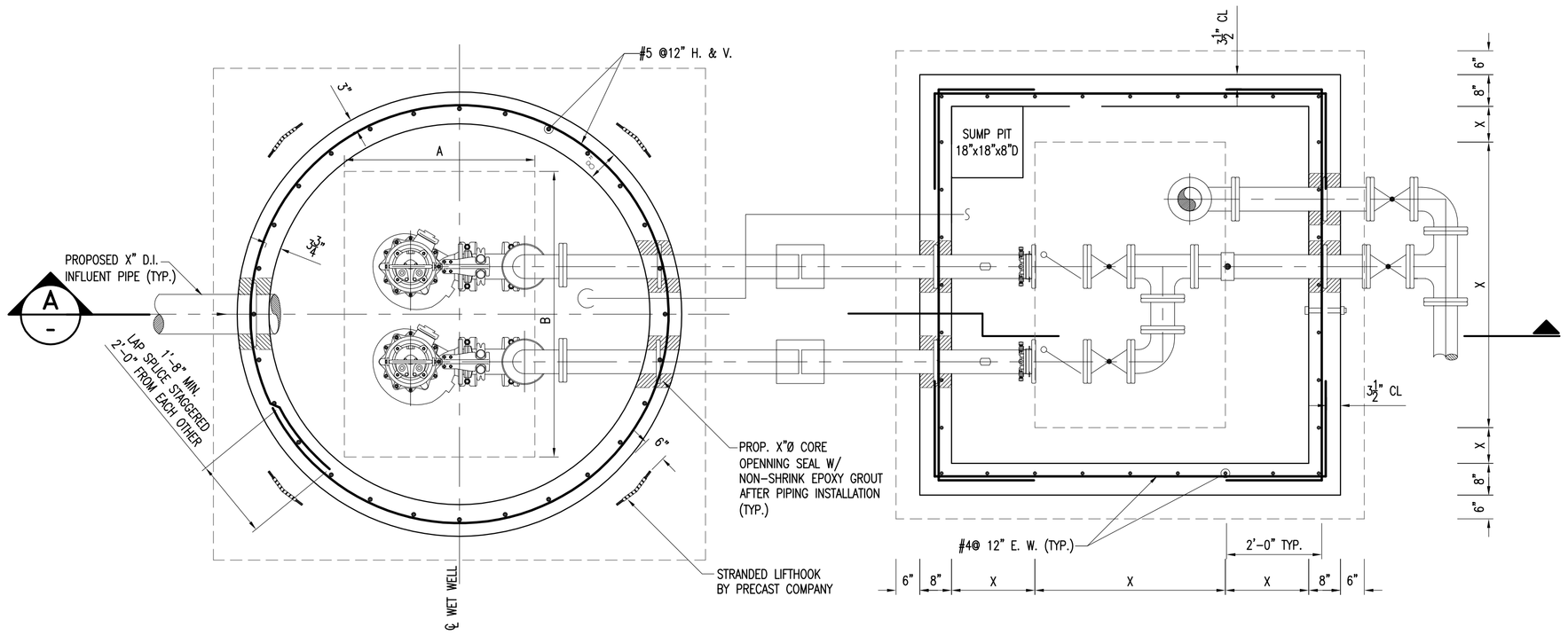

PLAN/WET WELL AND VALVE PIT

SCALE: 1/2"=1'-0"

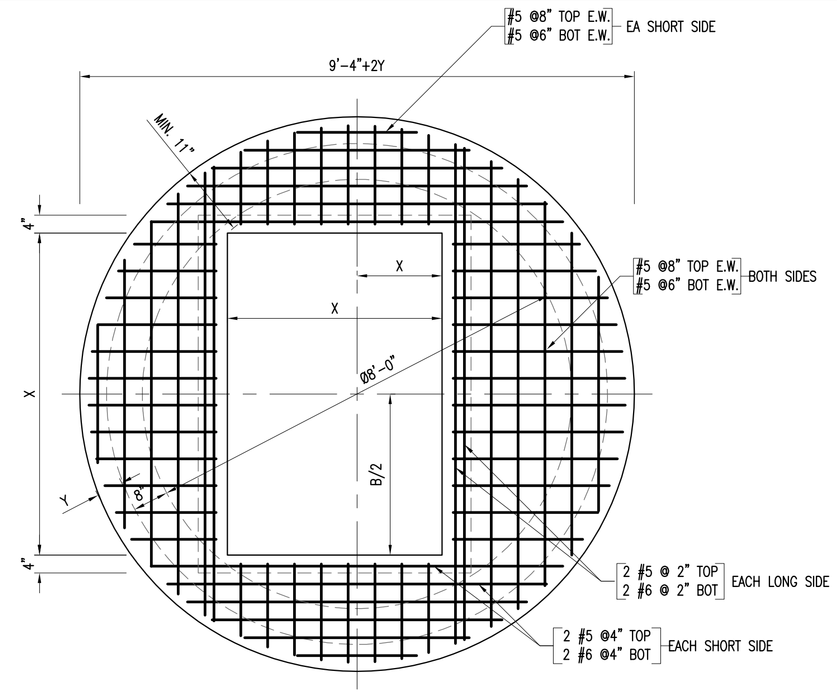

WET WELL TOP SLAB DETAIL

SCALE: 1/2"=1'-0"

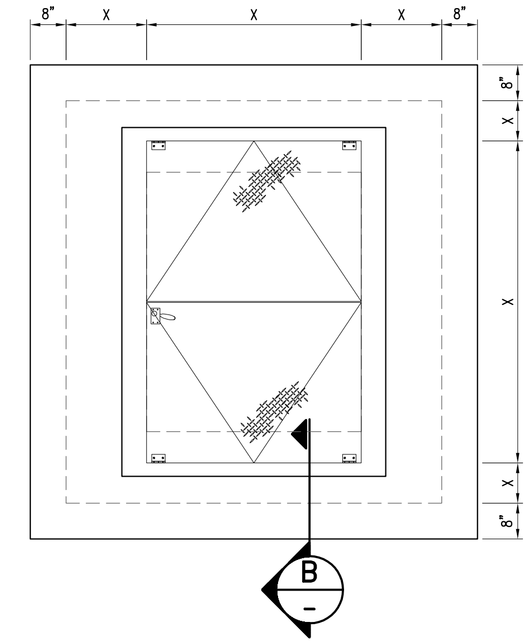

PLAN/VALVE PIT ACCESS

SCALE: 1/2"=1'-0"

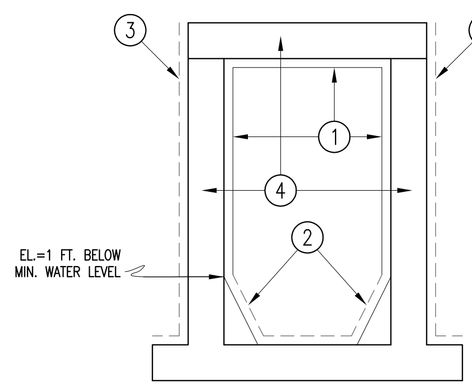

① SEWPERCOAT (CALCIUM ALUMINATE CEMENT) OR P.P.C. COATING SYSTEM WW-200-/a/ DAMP CONCRETE OR APPROVED EQUAL

② AND ③ KOP-COAT BITUMASTIC 300-M (COAL-TAR EPOXY).

④ CONSHIELD ANTI-BACTERIAL ADMIXTURE.

ELIMINATE ① & ② WHEN ④ IS USED.

DETAIL 1

N.T.S.

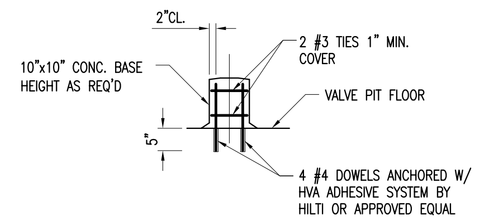

DETAIL 4

N.T.S.

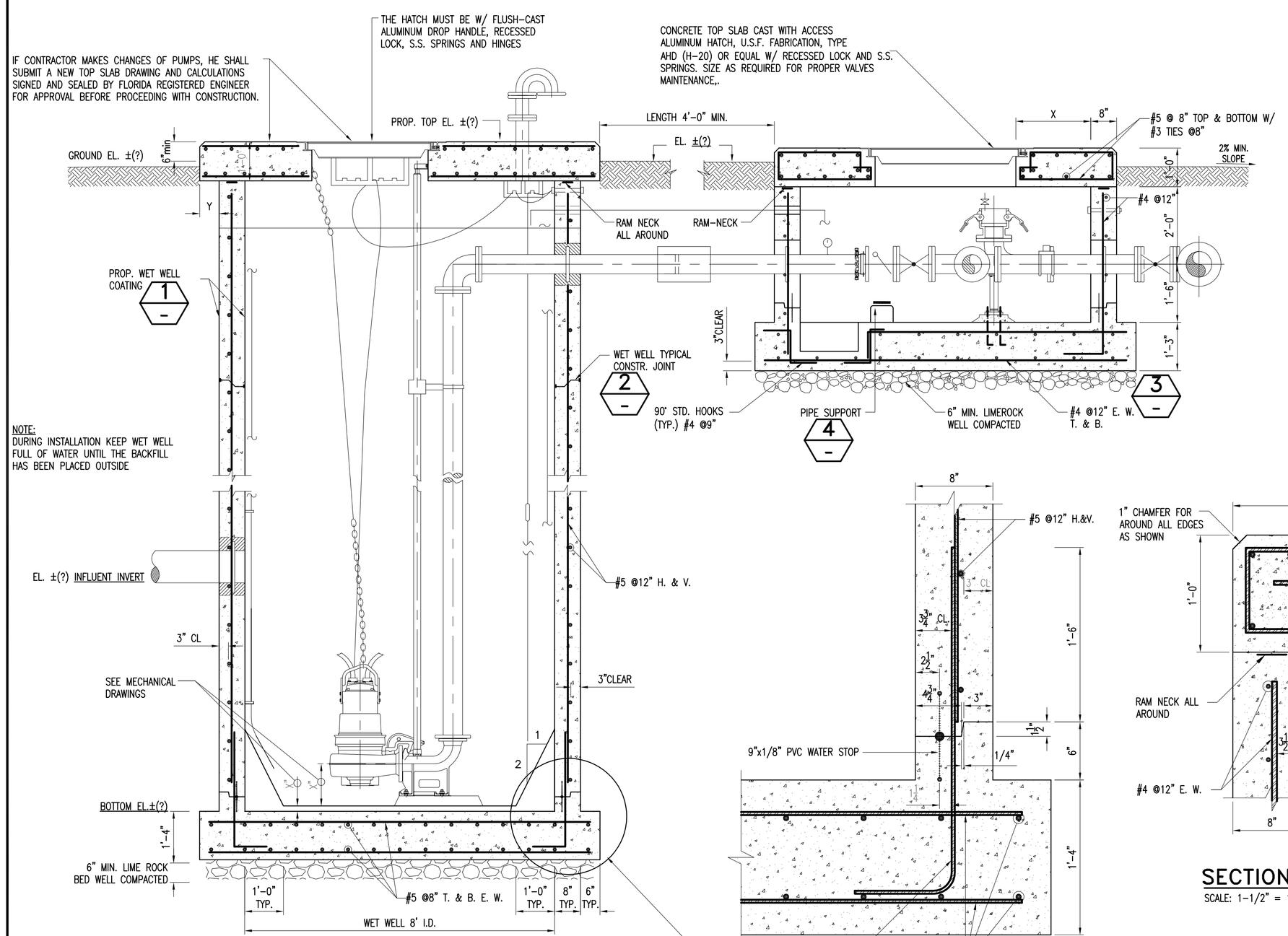

SECTION A

SCALE: 1/2"=1'-0"

TYPICAL CONSTRUCTION JOINT DETAIL AT BASE

SCALE: 1-1/2" = 1'-0"

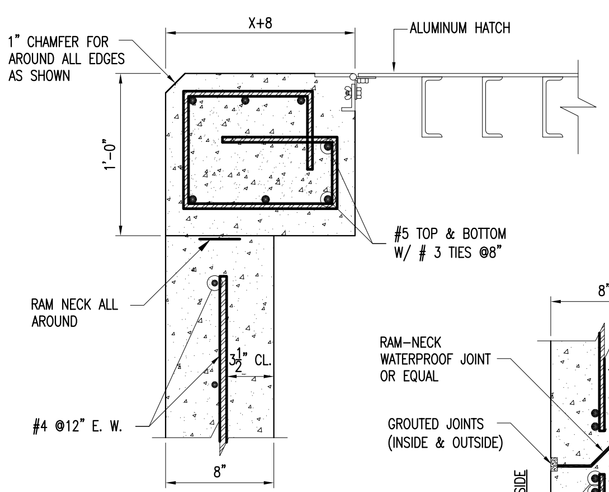

SECTION B

SCALE: 1-1/2" = 1'-0"

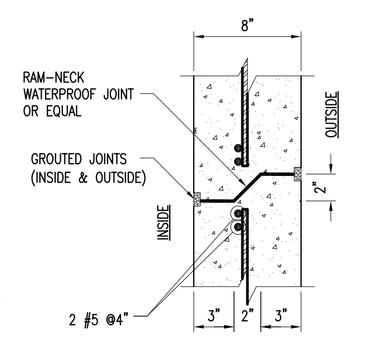

DETAIL 2

SCALE: 1 1/2"=1'-0"

(NOT PERMITTED DEEPER THAN 4 FT. BELOW THE HIGHEST GROUND WATER LEVEL) ACCORDING PUBLIC WORK W.C.-2.1

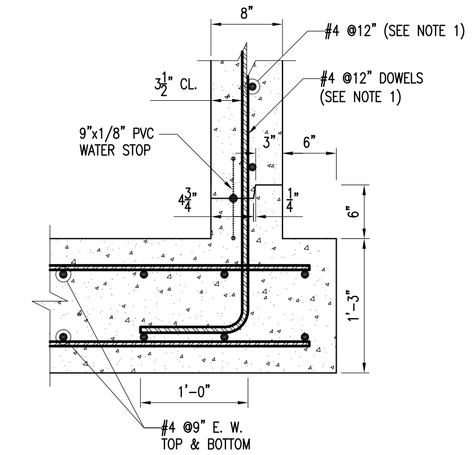

DETAIL 3

SCALE: 1"=1'-0"

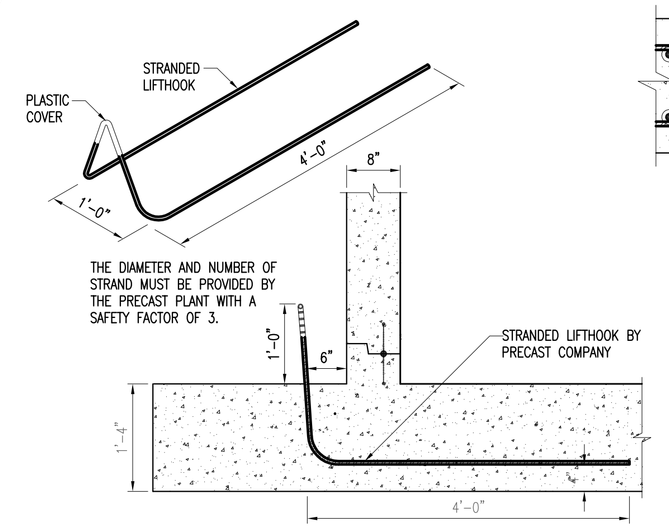

LIFTING HOOK

N.T.S.

NOTES TO THE ENGINEER OF RECORD:

1- THESE ARE NOT CONSTRUCTION DRAWINGS, BUT ARE GUIDELINES FOR MINIMUM DESIGN REQUIREMENTS. THE USER SHALL VERIFY AND MODIFY THE INFORMATION SHOWN HEREIN IN ACCORDANCE WITH ALL APPLICABLE CODES AND STANDARDS, TO COMPLY WITH THE REQUIREMENTS OF THEIR DESIGN AND MD-WASD REQUIREMENTS.
2- THIS DRAWING HAS SOME DIMENTIONS THAT NEED TO BE DETERMINED BY THE ENGINEERS WHO DESIGN THE PUMP STATION, AND THE DIMENTIONS "X" AND "Y" NEED TO BE PROVIDED.
3- THE VALVE PIT HATCH MUST BE SIZED AND LOCATED AS REQUIRED FOR PROPER EQUIPMENT OPERATION AND MAINTENANCE.
4- THE WET WELL HATCH MUST BE SIZED AND LOCATED ACCORDING THE REQUIREMENTS OF THE PUMPS MANUFACTURER.
5- THE WET WELL CONCRETE TOP SLAB WITH ACCESS HATCH FRAME SHALL BE DESIGNED FOR H-20 LIFE LOAD. THE HATCH SIZE AND LOCATION SHALL BE AS PER PUMPS MANUFACTURE'S RECOMMENDATIONS.
6- THE WET WELL TOP SLAB DETAIL MUST BE SHOWN ON SCALE. PROVIDE PLAN VIEW WITH DIMENSIONS AND LOCATION OF THE HATCH. THE DISTANCE BETWEEN THE CORNER OF THE OPENING AND THE EDGE OF THE SLAB MUST BE 11" MINIMUN AND "Y" COULD BE ZERO.

MIAMI-DADE COUNTY
Delivering Excellence Every Day

WATER AND SEWER DEPARTMENT
ENGINEERING DIVISION
3071 SW 38TH AVENUE
MIAMI, FLORIDA 33146-2221
305-665 7471
miamidade.gov

PUMP STATION No. 0000
FACILITY, OFFICIAL ADDRESS, FLORIDA 33100-0000

TYPICAL SUBMERSIBLE SEWAGE PUMP STATION (WASD DESIGN STANDARD UPDATE 2008)

STRUCTURAL PLAN, SECTIONS AND DETAILS

DRAWING HISTORY

RELEASED FOR	DATE	BY
REVIEW 30%		
REVIEW 70%		
REVIEW 100%		
PERMIT		

REVISIONS

No.	DESCRIPTION	DATE	BY

APPROVALS

CHIEF ENGINEER:
SECTION HEAD:
PROJECT MGR.:
DESIGNED: X.X.X. CHECKED: X.X.X.
DRAWN: X.X.X. FINAL CHECK: X.X.X.

XXXXXXX XXXXX, P.E.
XXXXXXXXXX Engineer
State of Florida – License No. 00000
Date:_____

ER No. : 00000

FILE NAME: 00000S01.DWG

DATE:MAR. 06, 2009 SCALE: AS NOTED

SHEET S-1

DWG. No. S-00000-A

M:\Q_Design_Section_Standards_CAD\Submersible PS\2009 Submersible PS\WASD PS S01.dwg, 4/29/2009 1:47:37 PM, CutePDF Writer