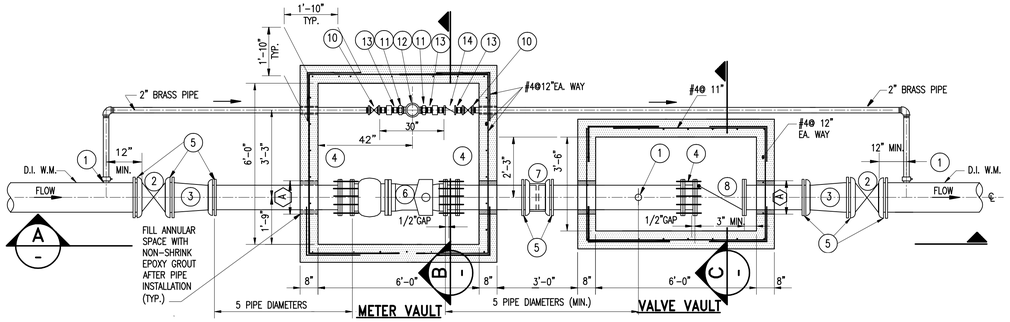

METER W/ 2" BY-PASS (STANDARD) SECTIONAL PLAN

N.T.S.

SEE TYPICAL SECTION FOR 4" METER IN NON-TRAFFIC AREAS AT LOW-RIGHT CORNER OF THIS DRAWING

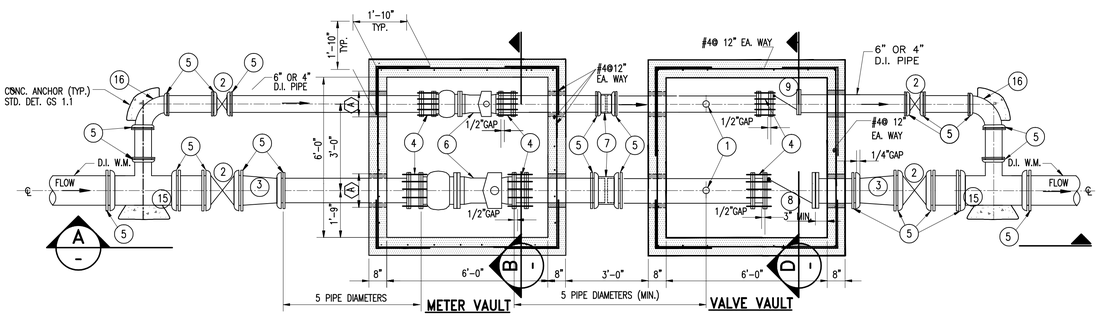

METER W/ 4" or 6" BY-PASS (SPECIAL APPLICATION ONLY *) SECTIONAL PLAN

N.T.S.

* ONLY FOR COMMERCIAL/ INDUSTRIAL/ MUNICIPAL SPECIAL APPLICATIONS THAT HAVE BEEN PRE-APPROVED BY DEPARTMENT.

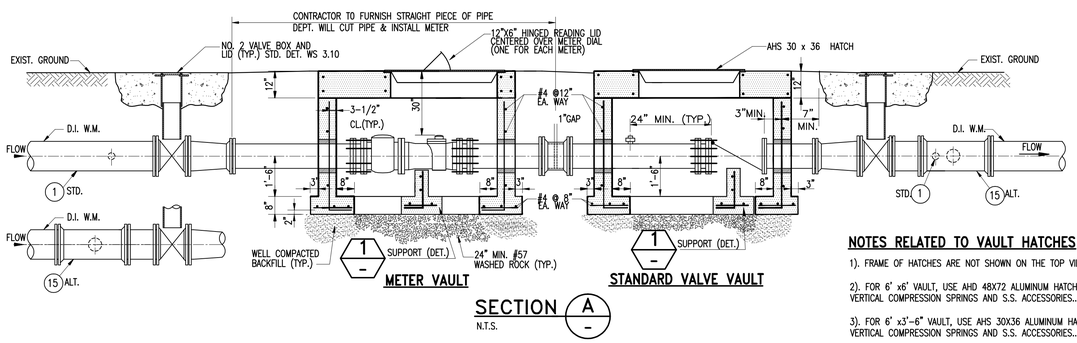

SECTION A

N.T.S.

NOTES ABOUT THE USE THESE GUIDELINES

1). THESE GUIDELINES ARE MINIMUM DESIGN REQUIREMENTS PROPOSED BY THE DEPARTMENT. THE USER OF THESE DRAWINGS SHALL VERIFY AND MODIFY INFORMATION SHOWN HERE TO MAKE HIS DESIGN COMPLY WITH ALL APPLICABLE CODES AND STANDARDS.

2). USER OF THESE DESIGN GUIDELINES NEEDS TO MODIFY PLANS AND SECTIONS SHOWN HERE TO REFLECT HIS ACTUAL DESIGN CONDITIONS.

3). PLANS AND SECTIONS SHOWN IN THIS DRAWING ARE NOT TO SCALE. FOR DEPARTMENT'S APPROVAL, DESIGNER SHALL SUBMIT SIGNED AND SEALED PLANS, DRAWN TO SCALE FOR A SPECIFIC LINE/METER DIAMETER.

4). THE DEPARTMENT HAS THE RIGHT TO CALL FOR ADDITIONAL REQUIREMENTS.

INSTALLATION NOTES:

1). PRESSURE REDUCING OR FLOW DISTURBING DEVICES SHALL NOT BE INSTALLED CLOSER THAN 5-PIPE DIAMETERS UPSTREAM OR DOWNSTREAM FROM THE METERS.

2). METERS AND CHECK VALVES SHALL BE SUPPORTED INSIDE THE VAULT.

3.) ALL PIPES SHALL BE WRAPPED WITH 2 LAYERS OF 30# ROOFING FELT, WHERE THEY PASS THROUGH VAULT WALLS.

4). CONCRETE VAULTS SHALL BE MANUFACTURED BY U.S. PRECAST OR APPROVED EQUAL.

5). CONCRETE TO OBTAIN A MAX. COMPRESSIVE STRENGTH f'c =4,000 psi AT 28 DAYS.

6). REINFORCEMENT TO COMPLY WITH ASTM-A-615 WITH A MIN. YIELD STRENGTH F =60,000 psi.

7). ALL PIPE AND FITTINGS SHALL BE DUCTILE IRON, CEMENT LINED, UNLESS OTHERWISE CALLED FOR.

8). CONTRACTOR SHALL COORDINATE W/ DEPT. FOR LOCATION OF TEST VALVE TAP.

MARK	ITEM		QTY.	METER SIZE 4	6	8	10
				DIAM. ACCORDING TO MAIN METER SIZE			
1	AWWA/CC TAPER THREAD X FEMALE I.P. THREAD OUTLET, FORD FB 1600 SERIES OR EQUAL.	-STD.2"	3	1-1/2x 2	1-1/2x 2	2 x 2	2 x 2
		- ALT.	2				
2	N.R.S. GATE VALVE, M.J.	-STD.2"	2	6	8	10	12
		- ALT.	2	–	–	4 OR 6	4 OR 6
3	SMALL END M.J. BELL x P.E. REDUCER		2	6 x 4	8 x 6	10 x 8	12 x 10
4	MEGAFLANGE ADAPTER	-STD.2"	3	A S	R E Q U I R E D		
		- ALT.	6	A S	R E Q U I R E D		
5	MEGALUG RETAINER GLAND	-STD.2"	AS	A S	R E Q U I R E D		
		- ALT.	REQ'D	A S	R E Q U I R E D		
6	SENSUS TURBO-METER W/ STRAINER, FLG. (PROVIDED BY WATER & SEWER DEPT.)		1 OR 2	A S	R E Q U I R E D		
7	SOLID SLEEVE, M.J.	-STD.2"	1	4	6	8	10
		- ALT.	2	–	–	8	10
8	DETECTOR CHECK VALVE W/O METER TRIM, FLG.	- STD.2"	1	4	6	8	10
		- ALT.	1	–	–	4 OR 6	4 OR 6
9	SWING CHECK VALVE		1	A S	R E Q U I R E D		
10	N.R.S. GATE VALVE, THD.		2	2	2	2	2
11	COMPRESSION COUPLING (LOK-PAK)		2	2	2	2	2
12	DISPLACEMENT TYPE METER (PROVIDED BY WATER & SEWER DEPT.)		1	2	2	2	2
13	G.S. SHORT NIPPLE		3	2	2	2	2
14	CHECK VALVE, THD.		1	2	2	2	2
15	TEE, M.J.		2	–	–	10 X 4	12 X 4 12 X 6
16	90° M.J. BEND		2	–	–	4	4 OR 6

NOTES: 1.) CONTRACTOR IS RESPONSIBLE FOR ALL ITEMS EXCEPT (6) AND (12).

2.) ALL SIZES ARE GIVEN IN INCHES.

MAIN DIAM.	GPM @ 5 fps	METER SIZE	OPERATING RANGE (GPM)
6"	440	4"	15 TO 1000
8"	785	6"	30 TO 2000
10"	1225	8"	35 TO 3500
12"	1760	10"	55 TO 5500

ABOVE METER CAPACITIES ARE BASED ON SENSUS TURBOMETER. CHECK OPERATING RANGE WHEN USING OTHER METERS. SUGGESTED REDUCTION ON SIZE FROM MAIN TO METER SIZE TO BE REVISED WHEN ACTUAL FLOWS ARE KNOWN.

NOTES RELATED TO VAULT HATCHES

1). FRAME OF HATCHES ARE NOT SHOWN ON THE TOP VIEWS.

2). FOR 6' x6' VAULT, USE AHD 48X72 ALUMINUM HATCH WITH S.S. VERTICAL COMPRESSION SPRINGS AND S.S. ACCESSORIES..

3). FOR 6' x3'-6" VAULT, USE AHS 30X36 ALUMINUM HATCH WITH S.S. VERTICAL COMPRESSION SPRINGS AND S.S. ACCESSORIES..

4). ACCORDING TO THE MANUFACTURER U.S. FOUNDRY FABRICATION, OR APPROVED EQUAL, THESE HATCHES ARE INTENDED FOR USE ON OFF STREET LOCATIONS THAT MAY OCCASIONALLY RECEIVE AASHTO H-20 WHEEL LOADS.

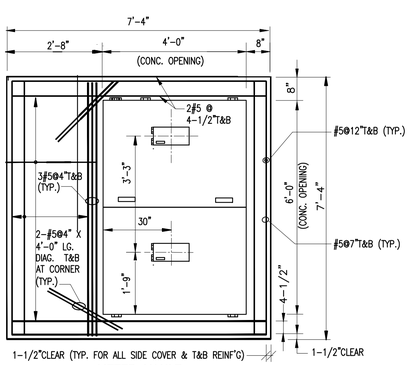

METER VAULT

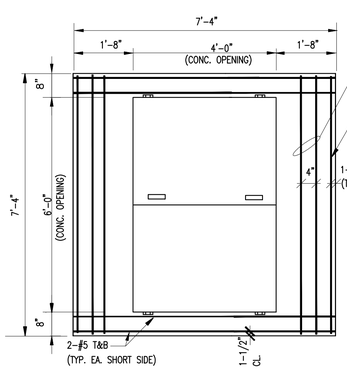

VALVE VAULT (SPECIAL APPLICATION)

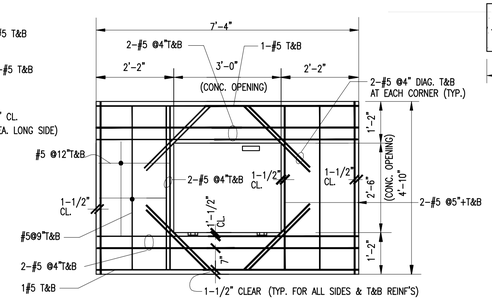

VALVE VAULT (STANDARD)

TOP VIEWS

N.T.S.

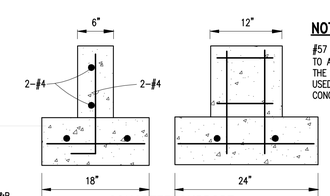

CONCRETE SUPPORT

NOTE:

#57 WASHED ROCK UP TO APPROX. 1" BELOW THE SPRINGLINE CAN BE USED INSTEAD OF THE CONCRETE SUPPORT.

DETAIL 1

SCALE: 1"=1'-0"

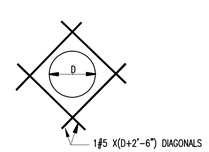

REINFORCEMENT AROUND OPENINGS (TYP.)

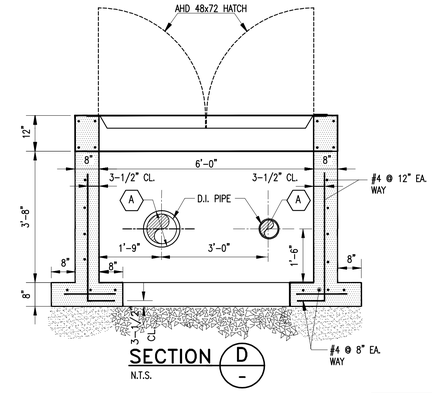

SECTION D

N.T.S.

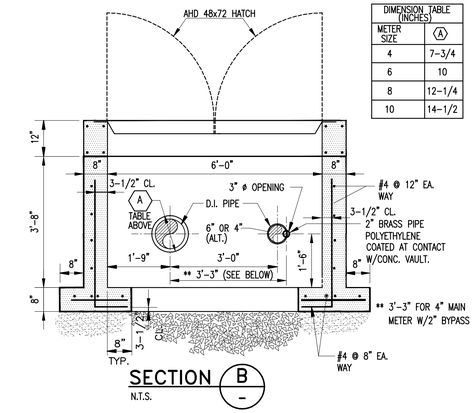

DIMENSION TABLE (INCHES)	
METER SIZE	(A)
4	7-3/4
6	10
8	12-1/4
10	14-1/2

SECTION B

N.T.S.

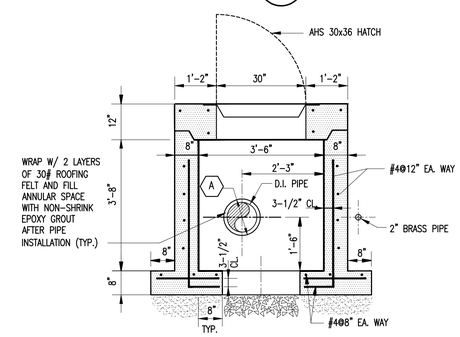

SECTION C

N.T.S.

NOTES:

1). THIS ARRANGEMENT SHALL BE USED ONLY FOR CASES WHERE THERE IS NO POSSIBILITY OF RUNNING OR PARKING A VEHICLE OVER THE METER AND CHECK VALVE VAULTS. IT IS RECOMMENDED TO PROTECT THE ACCESS PERIMETER TO THESE VAULTS WITH DENSE SHRUBBERY OR STEEL GUARD POSTS FILLED WITH CONCRETE.

2). VAULT COVER TO BE TWO (2) STANDARD 2'X4' STL. COVERS FOR NON-TRAFFIC VAULT PER WASD STD. DET. WS 2.17

3). 4" CHECK VALVE VAULT SHALL BE THE STANDARD 2X4 FEET PRECAST VAULT AS PER WASD STD. DET. WS 2.17

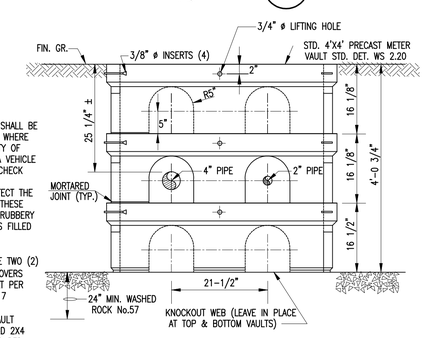

TYPICAL SECTION FOR 4"METERS IN NON-TRAFFIC AREAS

N.T.S.

TITLE ITEMS WITHIN BRACKETS ARE TO BE FILLED BY DESIGNER WITH THE SPECIFIC INFORMATION

CHANGE TO DESIGNER'S NAME OR FIRM

TO BE MODIFIED BY DESIGNER

MIAMI-DADE COUNTY
Delivering Excellence Every Day

WATER AND SEWER DEPARTMENT
ENGINEERING DIVISION
3071 SW 38TH AVENUE
MIAMI, FLORIDA 33146-2221
305-665 7471
miamidade.gov

<METER FACILITY NAME>
<OFFICIAL ADDRESS, FLORIDA 33100-0000>
<PROJECT TITLE>
<CONTRACT/ PROJECT No.>
<DESIGN GUIDELINES FOR TURBINE METERS>
<4" TO 10" WITH BY-PASS>

DRAWING HISTORY

RELEASED FOR		DATE	BY
REVIEW 30%	X	00/00/05	XX
REVIEW 70%			
REVIEW 100%			
PERMIT			

REVISIONS

No.	DESCRIPTION	DATE	BY

APPROVALS

CHIEF ENGINEER:
SECTION HEAD:
PROJECT MGR.:
DESIGNED: HS | CHECKED: RZ
DRAWN: AAA/JY | FINAL CHECK: HS

XXXXXXX XXXXX
XXXXXXXXXX Engineer
State of Florida – License No. 00000
Date:_____

ER No. : 00000
FILE NAME: 47179WM-1.DWG
DATE: MAY 30, 2008 | SCALE: AS NOTED

SHEET WM-1

DWG. No. W-13230-A

2005-WASD-24x36.dwg