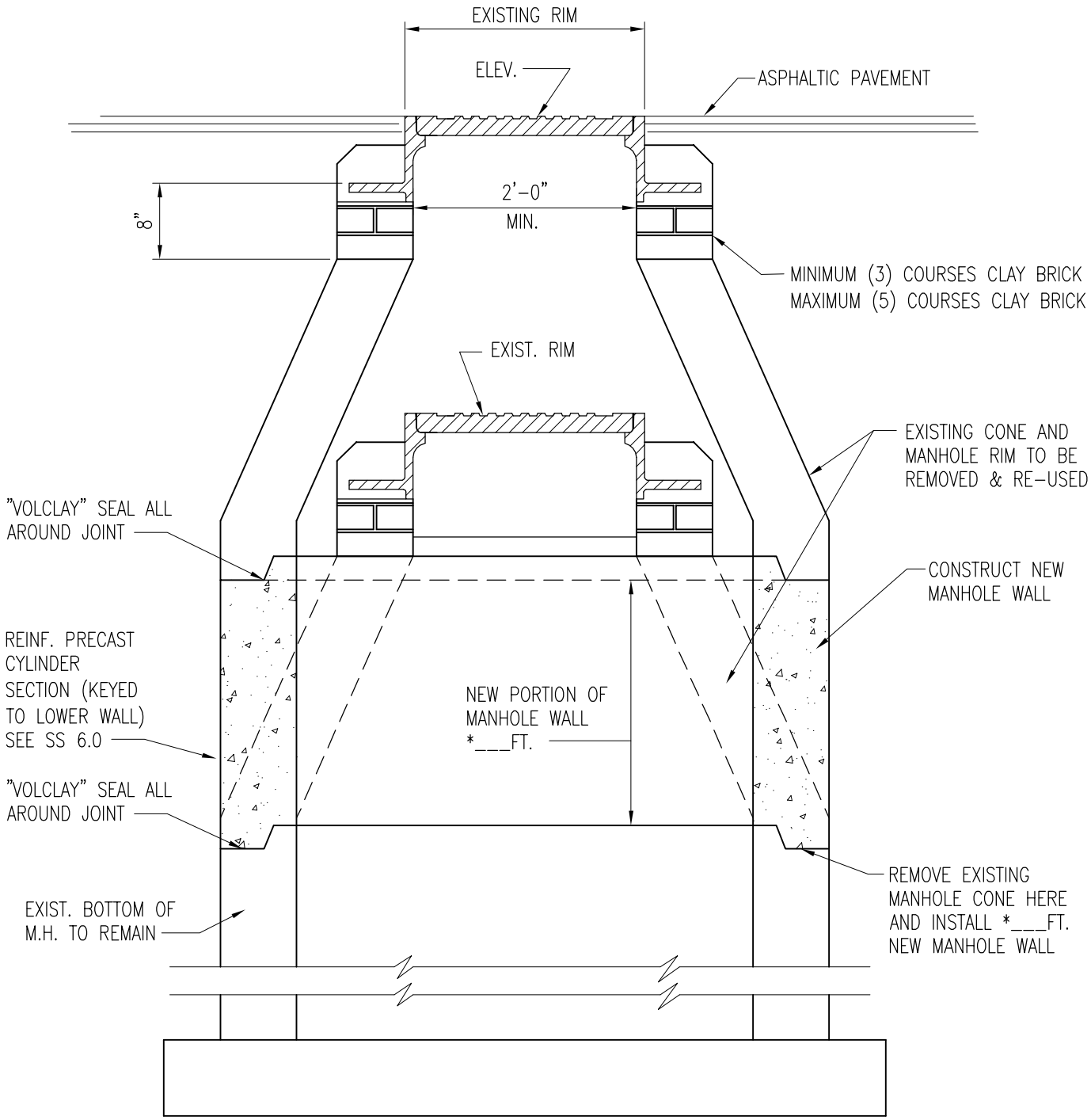

* VARIES FROM SITE TO SITE

ITEM	CROSS REF.	SPEC. REF.

MIAMI-DADE COUNTY
Delivering Excellence Every Day
WATER & SEWER DEPARTMENT

ISSUE DATE	APPROVED BY
06/01/2008	V.F.C.

STANDARD DETAIL

DETAIL MANHOLE ADJUSTMENT

SS
8.0
SHEET 1 OF 1