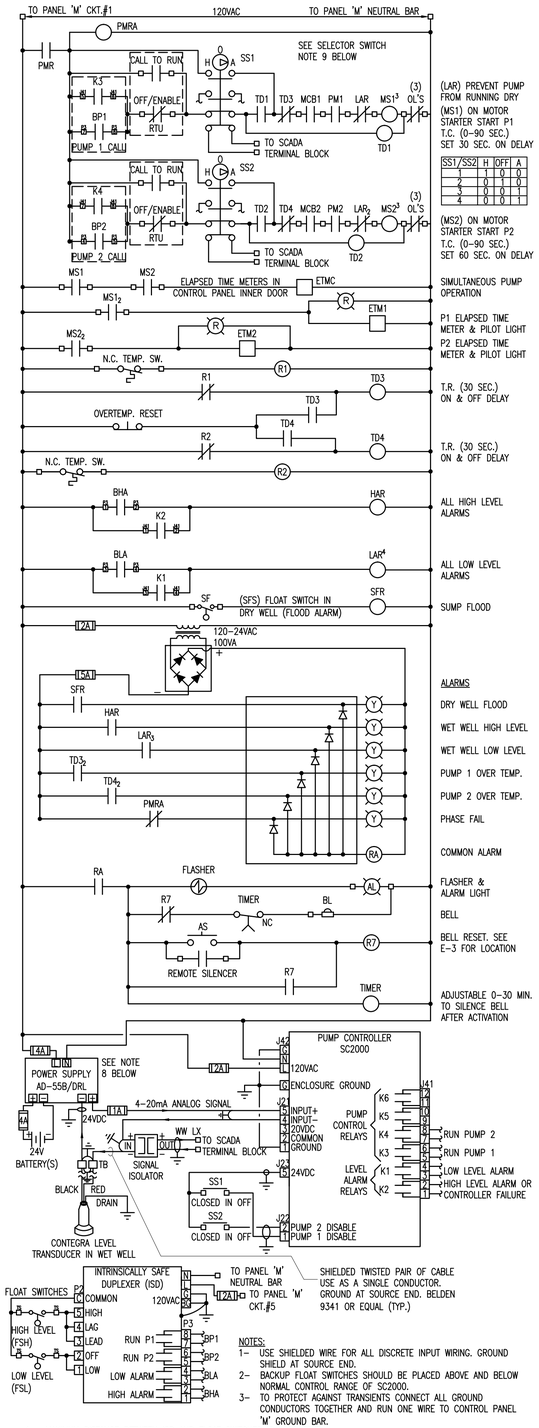

NOTES:

1- USE SHIELDED WIRE FOR ALL DISCRETE INPUT WIRING. GROUND SHIELD AT SOURCE END.
2- BACKUP FLOAT SWITCHES SHOULD BE PLACED ABOVE AND BELOW NORMAL CONTROL RANGE OF SC2000.
3- TO PROTECT AGAINST TRANSIENTS CONNECT ALL GROUND CONDUCTORS TOGETHER AND RUN ONE WIRE TO CONTROL PANEL 'M' GROUND BAR.
4- MAXIMUM DISTANCE BETWEEN ISD AND FLOAT SWITCHES IS 1000 FEET.
5- PRESSURE TRANSDUCER MODEL NUMBER: *SLX 130-M-10-40-B* PRESSURE TRANSDUCER BY CONTEGRA OR APPROVED EQUAL.
6- SIGNAL ISOLATOR VOLTAGE DROP AT INPUT TERMINALS SHALL NOT BE HIGHER THAN 5.5VDC. ISOLATOR BY PHOENIX CONTACT OR APPROVED EQUAL
7- PROVIDE A POWERED SIGNAL ISOLATOR IN CASE RTU ASSEMBLY IS FAR FROM CONTROL PANEL.
8- POWER SUPPLY WITH BATTERY CHARGER ASTRODYNE MODEL AD55-B/DRL OR APPROVED EQUAL. PROPOSED POWER SUPPLY INRUSH CURRENT WHEN COLD IS 20A. SELECTED PROTECTIVE FUSE SHALL WITHSTAND SUCH CURRENT.
9- PROVIDE EXTRA SET OF AUX. DRY CONTACTS ON H-O-A SWITCHES TO ACKNOWLEDGE SCADA WHEN IN AUTO POSITION.
10- SUPERSCRIPT INDICATES NUMBER OF NORMALLY OPEN AND NORMALLY CLOSE POLES WHEN DIFFERENT FROM 2.
11- SUBSCRIPT IDENTIFY POLE CONTACT NUMBER WHEN GREATER THAN 1.
12- FOR MORE INFORMATION CONSULT MPE-SC2000, CONTEGRA SLX & MPE-ISD PRODUCT MANUAL.

CONTROL WIRING DIAGRAM

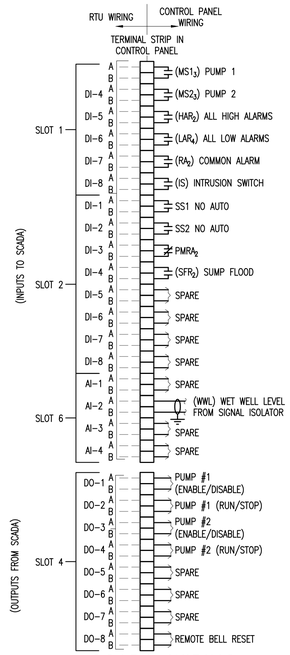

SCADA WIRING

N.T.S.

NOTES:

1-. — — — WIRING TO SCADA RTU PANEL TO BE FURNISHED AND INSTALLED BY CONTRACTOR. FINAL CONNECTION TO BE PERFORMED BY MD-WASD.
2-. PROVIDE AT LEAST 20 SPARE TERMINALS, 1 POLE EACH..
3-. SLOT 1 SHALL BE WIRED WITH #14 THHN STR. BLUE AND LABELED ACCORDING TO DRAWING.
4-. SLOT 2 SHALL BE WIRED WITH #14 THHN STR. BLACK AND LABELED ACCORDING TO DRAWING.
5-. 4-20 MA SIGNAL CABLE SHALL BE BELDEN 9341 TWISTED PAIR OR EQUAL AND BE LABELED ACCORDING TO DRAWING.
6-. SLOT 4 SHALL BE WIRED WITH #14 THHN STR. RED AND LABELED ACCORDING TO DRAWING.

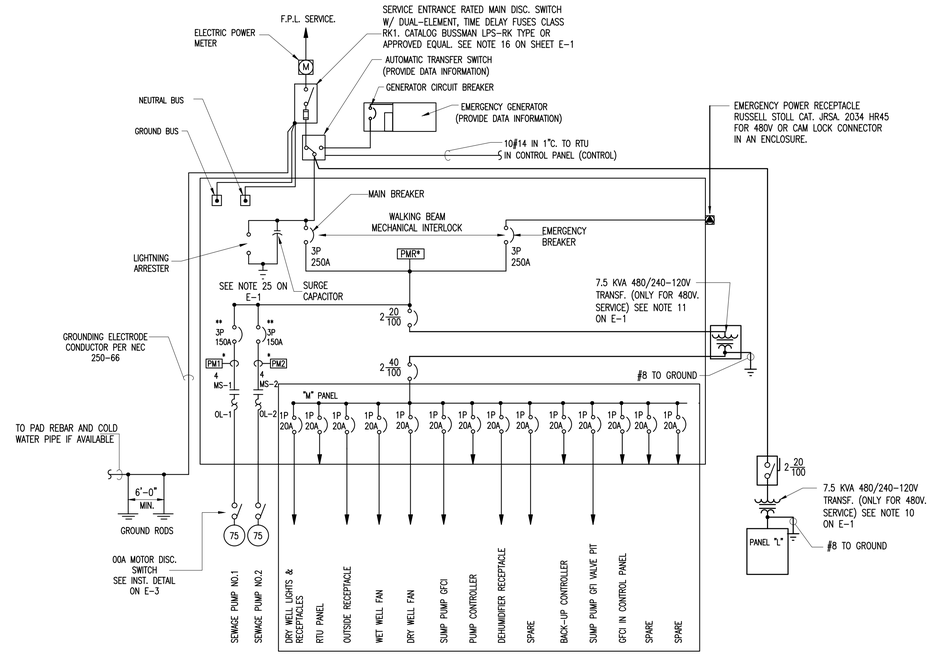

* THREE PHASE VOLTAGE MONITORS. INSTALL 2 AMPS. FAST ACTING FUSES IN SERIES WITH EACH OF THE INPUTS.
** PROVIDE MOTOR CIRCUIT BREAKERS WITH (MCB) AUXILIARY CONTACTS

ONE LINE DIAGRAM

N.T.S.

SERVICE: 1-PH, 3#8 & 1#10(G)
VOLTAGE: 240/120V

PANEL 'L'

MAIN: 2P-40A M.C.B.
LOCATION: CONTROL PANEL

VA	POLE	TRIP	COND.	WIRE	REMARKS				REMARKS	WIRE	COND.	TRIP	POLE	VA
400	1	20	3/4"	2#12 & (G)	INSIDE LIGHTS .	1		2	GEN. JACKET HEATER	2#12 & (G)	3/4"	20	1	1500
720	1	20	3/4"	2#12 & (G)	RECEPTACLES	3		4	RECEPTACLES	2#12 & (G)	3/4"	20	1	720
1200	1	20	3/4"	2#12 & (G)	EXHAUST FAN	5		6	OUTSIDE LIGHTS.	2#12 & (G)	3/4"	20	1	400
960	1	20	3/4"	2#12 & (G)	DAY TANK PUMP	7		8	BATTERY CHARGER	2#12 & (G)	3/4"	20	1	800
–	1	20	–	–	SPARE	9		10	SPARE	–	–	20	1	–
–	1	20	–	–	SPARE	11		12	SPARE	–	–	20	1	–
3280	TOTAL				TOTAL CONNECTED LOAD: 6700 VA @ 240/120 VOLTS								TOTAL	3420

SERVICE: 1-PH, 3#8 & 1#10(G)
VOLTAGE: 240/120V

PANEL 'M'

MAIN: 2P-40A M.C.B.
LOCATION: CONTROL PANEL

VA	POLE	TRIP	COND.	WIRE	REMARKS				REMARKS	WIRE	COND.	TRIP	POLE	VA
760	1	20	3/4"	2#12 & (G)	D.W. LIGHTS & RECEP.	1		2	TELEMETRY PANEL	2#12 & (G)	3/4"	20	1	180
180	1	20	3/4"	2#12 & (G)	OUTSIDE RECEPTACLE	3		4	WET WELL FAN	2#12 & (G)	3/4"	20	1	1200
1200	1	20	3/4"	2#12 & (G)	DRY WELL FAN	5		6	SUMP PUMP GFCI RECEP.	2#12 & (G)	3/4"	20	1	1200
400	1	20	3/4"	2#12 & (G)	PUMP CONTROLLER	7		8	DEHUMIDIFIER RECEPTACLE	2#12 & (G)	3/4"	20	1	900
–	1	20	3/4"	2#12 & (G)	SPARE	9		10	BACK-UP PUMP CONTROLLER	2#12 & (G)	3/4"	20	1	200
1200	1	20	3/4"	2#12 & (G)	SUMP PUMP GFCI VALVE PIT	11		12	GFCI IN CONTROL PANEL	2#12 & (G)	3/4"	20	1	180
–	1	20	–	–	SPARE				SPARE	–	–	20	1	–
3740	TOTAL				TOTAL CONNECTED LOAD: 7420 VA @ 240/120 VOLTS								TOTAL	3680

AVAILABLE 3-PHASE FAULT CURRENT AT THE TRANSFORMER SECONDARY TERMINALS IS ESTIMATED BY FPL TO BE _____ RMS SYMMETRICAL AMPS AND DOES NOT INCLUDE: CONSIDERATION FOR ANY MOTOR CONTRIBUTION AND/OR FAULT CURRENT ASYMMETRY

LOAD CALCULATION

2-. 00 H.P. SEWAGE PUMPS	00 AMPS.
MISCELLANEOUS BASE LOAD	00 AMPS.
25% OF LARGEST MOTOR	00 AMPS.
TOTAL	00 AMPS.
PROVIDE SERVICE SIZE: 00	

PRESSURE TRANSDUCER MODEL NUMBER

SLX 130-M-10-40-B

SLX130: MODEL.
M: 4-20mADC.
10: PRESSURE
5 FOR 0-11.5 FT.
10 FOR 0-23.1 FT.
15 FOR 0-34.6 FT.
30 FOR 0-69.3 FT.
40: FEET OF CABLE 10 FT INCREMENT
B: BREATHER SYSTEM ONLY

BREAKERS, WIRING AND CONDUIT SCHEDULE

VOLTS & PHASE	MOTOR HP	MOTOR AMP CODE	START SIZE	MOTOR CIRCUIT PROTECT. AMPS	MOTOR WIRE THWN CU. NOTE 13 ON E-5	SIZED FOR TWO PUMP STATIONS		
						MAIN & STAND-BY BREAKERS	SERVICE	
							GROUNDING	POWER
480-3ϕ	75	96	4	150	3#1 & 1#6(G) IN 1 1/2"	250	#2	3#250 MCM & 1#1(N), IN 3"C

THESE ARE NOT CONSTRUCTION DRAWINGS. THE INFORMATION HEREIN CONTAINED SHALL ONLY BE USED AS GENERAL GUIDELINE OF THE INTENDED OPERATION AND FUNCTIONS AND SHALL NOT BE CONSTRUED AS ALL INCLUSIVE. ENGINEERS OF RECORD AND CONSULTANTS USING THESE GUIDELINES SHALL VERIFY AND MODIFY ANY REQUIREMENT NOT NECESSARILY SHOWN AS MAY BE REQUIRED BY ANY AND ALL APPLICABLE CODES AND STANDARDS.

MIAMI-DADE COUNTY
Delivering Excellence Every Day

WATER AND SEWER DEPARTMENT
ENGINEERING DIVISION
3071 SW 38TH AVENUE
MIAMI, FLORIDA 33146-2221
305-665 7471
miamidade.gov

PUMP STATION No. 0000
FACILITY OFFICIAL ADDRESS, FLORIDA 33100-0000

DRY WELL/ WET WELL SEWAGE PUMP STATION
2012 WASD DESIGN STANDARD

POWER/CONTROL (MPE) AND WIRING SCHEDULE

DRAWING HISTORY

RELEASED FOR	DATE	BY
REVIEW 30%		
REVIEW 70%		
REVIEW 100%		
PERMIT		

REVISIONS

No.	DESCRIPTION	DATE	BY

APPROVALS

CHIEF ENGINEER:
SECTION HEAD:
PROJECT MGR.:
DESIGNED: X.X.X. CHECKED: X.X.X.
DRAWN: X.X.X. FINAL CHECK: X.X.X.

XXXXXXX XXXXX
XXXXXXXXXX Engineer
State of Florida – License No. 00000
Date:

ER No. : S000000 PCTS No. : 00000
FILE NAME: 00000E3A.DWG
DATE: AUG. 28, 2012 SCALE: AS NOTED
SHEET E-3A
DWG. No. S-00000-A