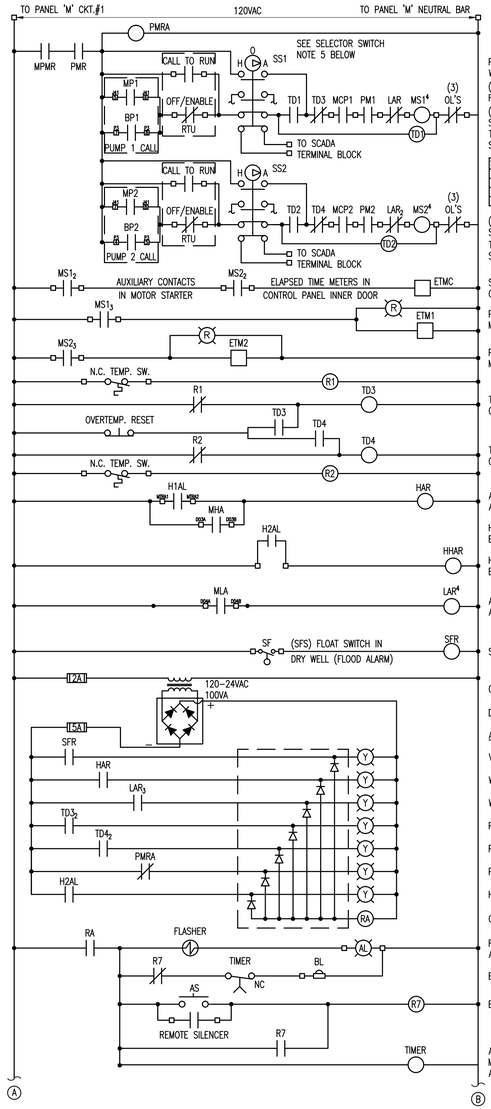

SS1/SS2	H	OFF	A
1	1	0	0
2	0	1	0
3	0	0	1
4	0	0	1

NOTES:

1- USE SHIELDED WIRE FOR ALL DISCRETE INPUT WIRING. GROUND SHIELD AT SOURCE END.
2- BACKUP FLOAT SWITCHES SHOULD BE PLACED ABOVE AND BELOW NORMAL CONTROL RANGE OF MULTISMART.
3- TO PROTECT AGAINST TRANSIENTS CONNECT ALL GROUND CONDUCTORS TOGETHER AND RUN ONE WIRE TO CONTROL PANEL ('PANEL D') GROUND BAR.
4- PROVIDE EXTRA SET OF AUXILIARY CONTACTS ON H-O-A SWITCHES TO ACKNOWLEDGE SCADA WHEN IN AUTO POSITION.
5- SUPERSCRIPT INDICATES NUMBER OF NORMALLY OPEN AND NORMALLY CLOSE POLES WHEN DIFFERENT FROM 2.
6- SUBSCRIPT IDENTIFY POLE CONTACT NUMBER WHEN GREATER THAN 1.
7- FOR MORE INFORMATION CONSULT MULTITRADE-MULTISMART, MULTITRADE-MTR RELAYS, AND CONTEGRA SLX PRODUCT MANUAL.

PROPOSED CONTROL WIRING DIAGRAM

N.T.S.

SERVICE: 1-PH, 3#8 & 1#10(G)
VOLTAGE: 240/120V

PANEL 'M'

MAIN: 2P-40A M.C.B.
LOCATION: CONTROL PANEL

VA	POLE	TRIP	COND.	WIRE	REMARKS				REMARKS	WIRE	COND.	TRIP	POLE	VA
760	1	20	3/4"	2#12 & (G)	D.W. LIGHTS & RECEP.	1		2	TELEMETRY PANEL	2#12 & (G)	3/4"	20	1	180
180	1	20	3/4"	2#12 & (G)	OUTSIDE RECEPTACLE	3		4	WET WELL FAN	2#12 & (G)	3/4"	20	1	1200
1200	1	20	3/4"	2#12 & (G)	DRY WELL FAN	5		6	SUMP PUMP GFCI RECEP.	2#12 & (G)	3/4"	20	1	1200
400	1	20	3/4"	2#12 & (G)	PUMP CONTROLLER	7		8	DEHUMIDIFIER RECEPTACLE	2#12 & (G)	3/4"	20	1	900
–	1	20	–	–	SPARE	9		10	BACK-UP PUMP CONTROLLER	2#12 & (G)	3/4"	20	1	200
–	1	20	–	–	SPARE	11		12	GFCI IN CONTROL PANEL	2#12 & (G)	3/4"	20	1	180
–	1	20	–	–	SPARE				SPARE	–	–	20	1	–
2540	TOTAL				TOTAL CONNECTED LOAD: 6220 VA @ 240/120 VOLTS								TOTAL	3680

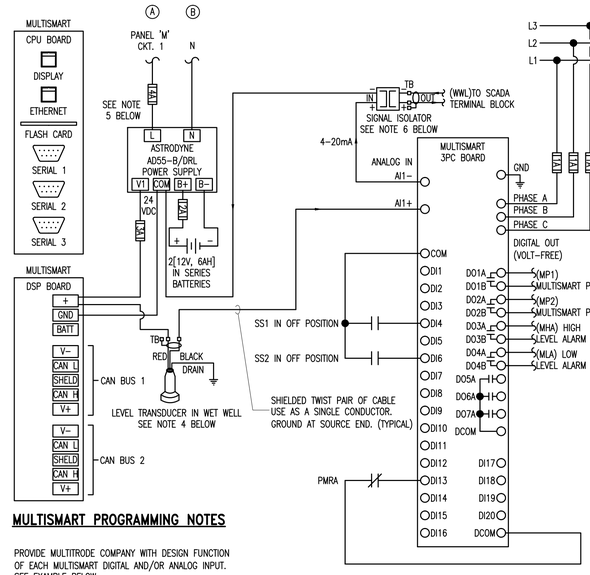

MULTISMART PROGRAMMING NOTES

PROVIDE MULTITRODE COMPANY WITH DESIGN FUNCTION OF EACH MULTISMART DIGITAL AND/OR ANALOG INPUT. SEE EXAMPLE BELOW.

1- DI4 & DI6:
DESCRIPTION:
(0) SELECTOR SWITCH IS EITHER ON AUTO OR HAND POSITION.
(1) SELECTOR SWITCH IS ON OFF POSITION.
FUNCTION:
(0) STANDARD FUNCTIONALITY.
(1) OUTPUT RELAYS 'DO1' AND 'DO2' HOLD OPEN.

2- DI13:
DESCRIPTION:
(0) STATION IS FUNCTIONING REGULARLY.
(1) STATION IS EITHER OFF POWER OR A SERVICE FAULT HAS BEEN DETECTED.
FUNCTION:
(0) STANDARD FUNCTIONALITY.
(1) OUTPUT RELAYS 'DO1' AND 'DO2' HOLD OPEN.

MULTISMART PUMP CONTROLLER

N.T.S.

NOTES:

1- PROVIDE 2[12V-6Ah] SERIES CONNECTED BACK-UP BATTERIES.
2- CURRENT TRANSFORMER OUTPUT SHALL BE 0-5A. WIRE WITH THE CORRECT POLARITY AND MAKE SURE THAT THE CURRENT PHASE CORRESPONDS TO THE VOLTAGE PHASE.
3- USE SHIELD TWISTED PAIR CABLE BETWEEN CT'S AND MPB. DO NOT GROUND CURRENT TRANSFORMERS.
4- PRESSURE TRANSDUCER MODEL NUMBER: *SLX 130-M-10-40-B* BY CONTEGRA OR APPROVED EQUAL.
5- POWER SUPPLY WITH BATTERY CHARGER ASTRODYNE MODEL AD55-B/DRL OR APPROVED EQUAL. PROPOSED POWER SUPPLY INRUSH CURRENT WHEN COLD IS 20A. SELECTED PROTECTIVE FUSE SHALL WITHSTAND SUCH CURRENT.
6- SIGNAL ISOLATOR BY PHOENIX CONTACT OR APPROVED EQUAL. PROVIDE A POWERED SIGNAL ISOLATOR IN CASE RTU ASSEMBLY IS FAR FROM CONTROL PANEL.

SLX 130-M-10-40-B

SLX130: MODEL.
M: 4-20mADC.
10: PRESSURE
5 FOR 0-11.5 FT.
10 FOR 0-23.1 FT.
15 FOR 0-34.6 FT.
30 FOR 0-69.3 FT.
40: FEET OF CABLE 10 FT INCREMENT
B: BREATHER SYSTEM ONLY

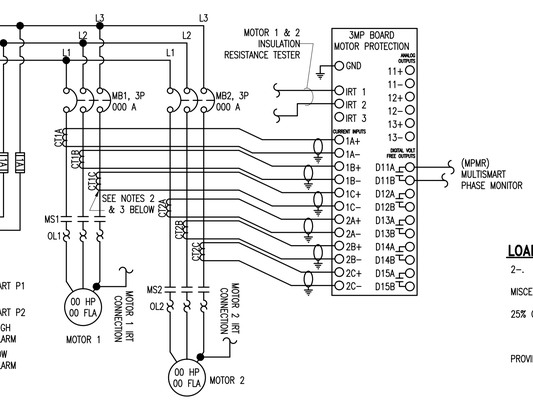

AVAILABLE 3-PHASE FAULT CURRENT AT THE TRANSFORMER SECONDARY TERMINALS IS ESTIMATED TO BE _____ RMS SYMMETRICAL AMPS AND DOES NOT INCLUDE: CONSIDERATION FOR ANY MOTOR CONTRIBUTION AND/OR FAULT CURRENT ASYMMETRY

LOAD CALCULATION

2-. 00 H.P. SEWAGE PUMPS	00 AMPS.
MISCELLANEOUS BASE LOAD	00 AMPS.
25% OF LARGEST MOTOR	00 AMPS.
TOTAL	00 AMPS.
PROVIDE SERVICE SIZE: 00	

SERVICE: 1-PH, 3#8 & 1#10(G)
VOLTAGE: 240/120V

PANEL 'L'

MAIN: 2P-40A M.C.B.
LOCATION: CONTROL PANEL

VA	POLE	TRIP	COND.	WIRE	REMARKS				REMARKS	WIRE	COND.	TRIP	POLE	VA
400	1	20	3/4"	2#12 & (G)	INSIDE LIGHTS .	1		2	GEN. JACKET HEATER	2#12 & (G)	3/4"	20	1	1500
720	1	20	3/4"	2#12 & (G)	RECEPTACLES	3		4	RECEPTACLES	2#12 & (G)	3/4"	20	1	720
1200	1	20	3/4"	2#12 & (G)	EXHAUST FAN	5		6	OUTSIDE LIGHTS.	2#12 & (G)	3/4"	20	1	400
960	1	20	3/4"	2#12 & (G)	DAY TANK	7		8	BATTERY CHARGER	2#12 & (G)	3/4"	20	1	800
–	1	20	–	–	SPARE	9		10	SPARE	–	–	20	1	–
–	1	20	–	–	SPARE	11		12	SPARE	–	–	20	1	–
3280	TOTAL				TOTAL CONNECTED LOAD: 6700 VA @ 240/120 VOLTS								TOTAL	3420

BREAKERS, WIRING AND CONDUIT SCHEDULE

VOLTS & PHASE	MOTOR HP	MOTOR AMP CODE	START SIZE	MOTOR CIRCUIT PROTECT. AMPS	MOTOR WIRE THWN CU. NOTE 13 ON E-5	SIZED FOR TWO PUMP STATIONS: MAIN & STAND-BY BREAKERS	SERVICE: GROUNDING	SERVICE: POWER
480-3ϕ	75	96	4	150	3#1 & 1#6(G) IN 1 1/2"	250	#2	3#250 MCM & 1#1(N), IN 3"C

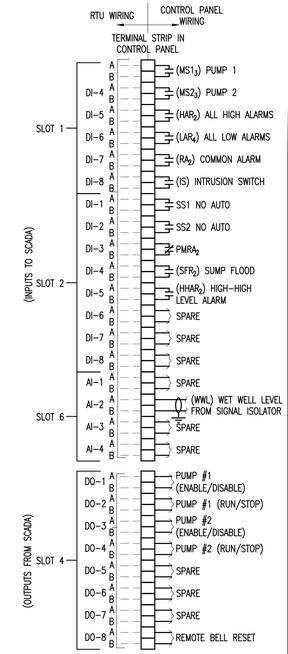

SCADA WIRING

N.T.S.

NOTES:

1-. — FINAL CONNECTION BY MDWASD.
2-. PROVIDE AT LEAST 5 SPARE CONTACTS.
3-. SLOT 4 SHALL BE WIRED WITH #14 THHN STR. RED AND LABELED ACCORDING TO DRAWING.
4-. FOR MULTI SPEED PUMPS CONNECT REMOTE CONTROL CIRCUIT TO HIGH SPEED.

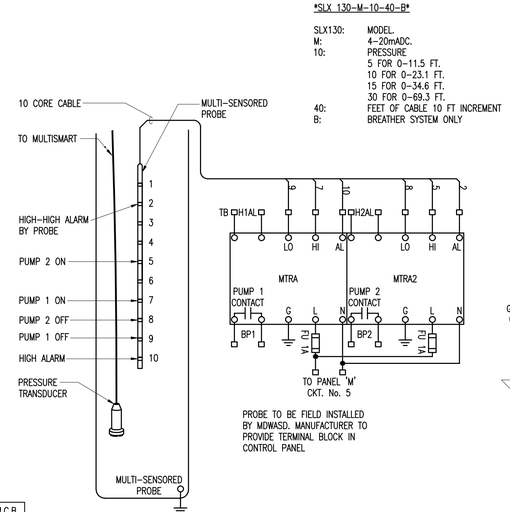

PROBE AND BACK-UP SYSTEM DIAGRAM

N.T.S.

NOTES:

1- HANG PROBE IN TURBULENT AREA OF WET WELL. PROVIDE MEANS TO REMOVE PROBE TO BE CLEANED WITHOUT ENTERING THE WET WELL.
2- DO NOT INSTALL THE PROBE IN A STAGNANT AREA OR CORNER WHERE GREASE AND DEBRIS MAY COLLECT. STILLING WELLS ARE NOT SUGGESTED.
3- ENSURE A MINIMUM OF 12" CLEARANCE FROM ANY SURFACE.
4- ENSURE BOTTOM OF PROBE IS 1/2" ABOVE MINIMUM BACK-UP PUMPING LEVEL.
5- PROBE START AND STOP POINTS SHALL BE SET ABOVE AND BELOW MULTISMART CONTROL RANGE.
6- THE PROBE CABLE MUST BE BURIED (OUTSIDE THE WELL) IN A SEPARATE METAL CONDUIT AND SHIELDED FOR CORRECT OPERATION OF THE LEVEL-SENSING DEVICE.
7- MOST PITS ARE ADEQUATELY EARTHED OR GROUNDED AND DO NOT REQUIRE ANY REFERENCE RODS, HOWEVER PVC OR FIBRE GLASS TANKS WITHOUT PUMPS OR METALLIC GROUNDED PIPE REQUIRE REFERENCE RODS.
8- PROBE CABLE SHALL BE RUN IN A SEPARATE CONDUIT AWAY FROM ANY HIGH VOLTAGE SIGNALS.
9- PROVIDE PROBE MODEL CONSIDERING WET WELL DEPTH.

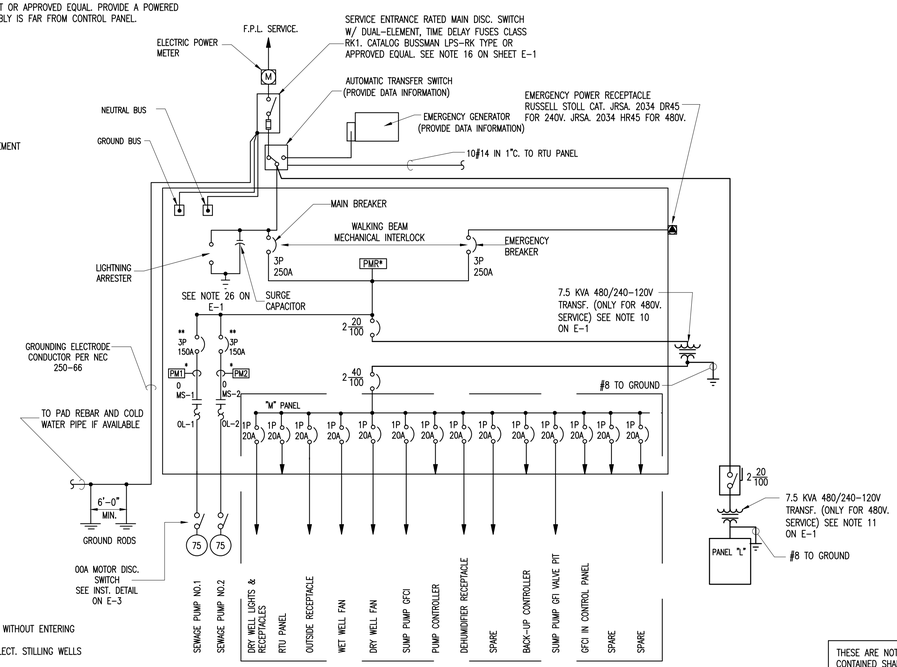

* THREE PHASE VOLTAGE MONITORS. INSTALL 2 AMPS. FAST ACTING FUSES IN SERIES WITH EACH OF THE INPUTS.
** PROVIDE MOTOR CIRCUIT PROTECTORS WITH (MCP) AUXILIARY CONTACTS

ONE LINE DIAGRAM

N.T.S.

THESE ARE NOT CONSTRUCTION DRAWINGS. THE INFORMATION HEREIN CONTAINED SHALL ONLY BE USED AS GENERAL GUIDELINE OF THE INTENDED OPERATION AND FUNCTIONS AND SHALL NOT BE CONSTRUED AS ALL INCLUSIVE. ENGINEERS OF RECORD AND CONSULTANTS USING THESE GUIDELINES SHALL VERIFY AND MODIFY ANY REQUIREMENT NOT NECESSARILY SHOWN AS MAY BE REQUIRED BY ANY AND ALL APPLICABLE CODES AND STANDARDS.

MIAMI-DADE COUNTY
Delivering Excellence Every Day

WATER AND SEWER DEPARTMENT
ENGINEERING DIVISION
3071 SW 38TH AVENUE
MIAMI, FLORIDA 33146-2221
305-665 7471
miamidade.gov

PUMP STATION No. 0000
FACILITY OFFICIAL ADDRESS, FLORIDA 33100-0000

DRY WELL/ WET WELL SEWAGE PUMP STATION
2012 WASD DESIGN STANDARD

POWER/CONTROL (MULTISMART) AND WIRING SCHEDULE

DRAWING HISTORY

RELEASED FOR	DATE	BY
REVIEW 30%		
REVIEW 70%		
REVIEW 100%		
PERMIT		

REVISIONS

No.	DESCRIPTION	DATE	BY

APPROVALS

CHIEF ENGINEER:
SECTION HEAD:
PROJECT MGR.:
DESIGNED: X.X.X. CHECKED: X.X.X.
DRAWN: X.X.X. FINAL CHECK: X.X.X.

XXXXXXX XXXXX
XXXXXXXXXX Engineer
State of Florida – License No. 00000
Date:_____

ER No. : S000000 PCTS No. : 00000
FILE NAME: 00000E03B.DWG
DATE: AUG. 28, 2012 SCALE: AS NOTED

SHEET E-3B

DWG. No. S-00000-A