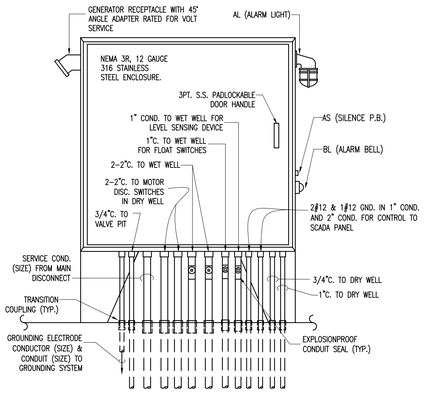


## CONTROL CABINET FRONT VIEW

N.T.S.

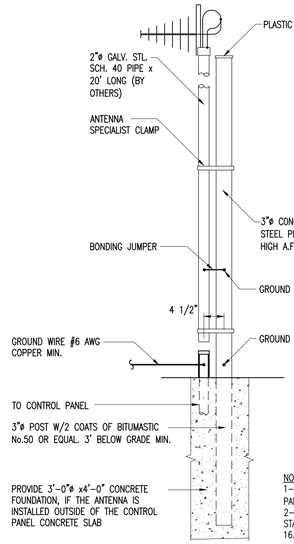


NOTE:
1-. RUN ANTENNA WIRE FROM SCADA RTU PANEL TO ANTENNA TROUGH 2" POST.
2-. TELEMETRY ANTENNA FOUNDATION IS WASD STANDARD AND COMPLIES WITH FBC CHAPTER 16.

## ANTENNA MOUNTING DETAIL

N.T.S.

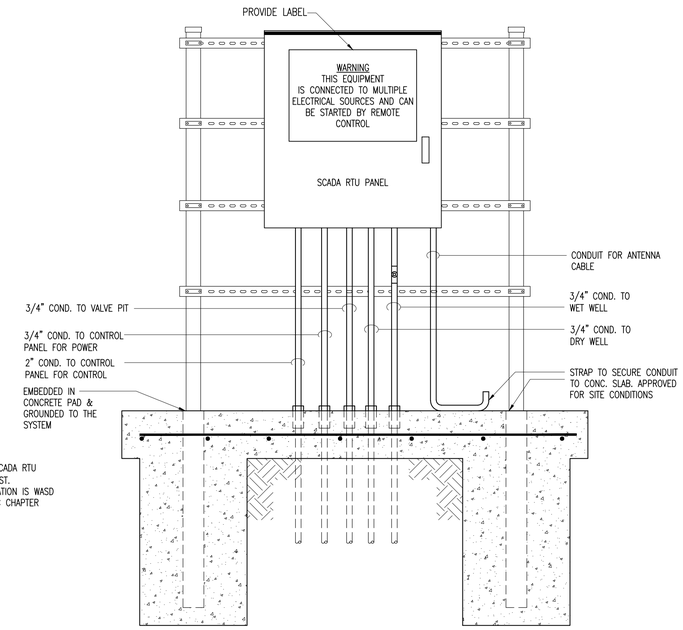


## TYP. RTU PANEL STAND

N.T.S.

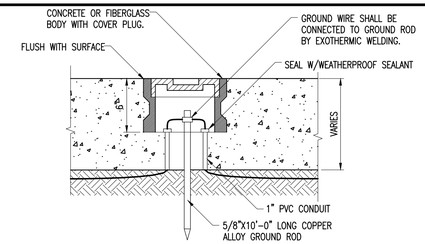


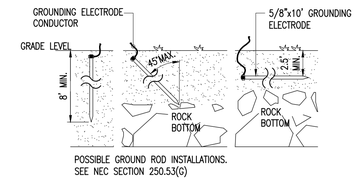


## TYPICAL GROUND ROD DETAIL

N.T.S.

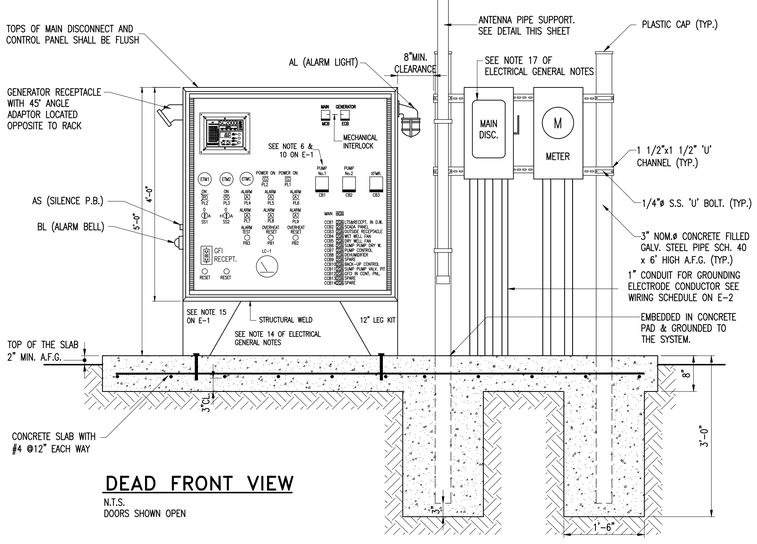


## DEAD FRONT VIEW

N.T.S.
DOORS SHOWN OPEN

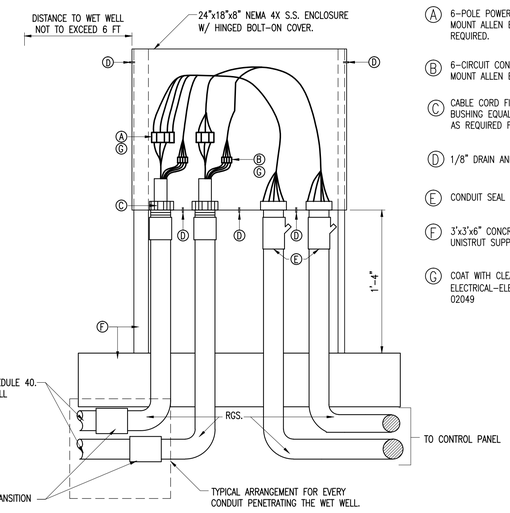


(A) 6-POLE POWER INSULATED TERM BLOCK PANEL MOUNT ALLEN BRADLEY BULLETIN 1492 SIZED AS REQUIRED.

(B) 6-CIRCUIT CONTROL INSULATED TERM BLOCK PANEL MOUNT ALLEN BRADLEY BULLETIN 1492

(C) CABLE CORD FITTING WITH GLAND NUT & NEOPRENE BUSHING EQUAL TO CROUSE HINDS CGFP SIZE OR AS REQUIRED FOR CABLE O.D.

(D) 1/8" DRAIN AND VENTILATION HOLES

(E) CONDUIT SEAL

(F) 3'x3'x6" CONCRETE SLAB & 1 5/8"x1 5/8" S.S. UNISTRUT SUPPORT FOR ENCLOSURE.

(G) COAT WITH CLEAR URETHANE SEAL ELECTRICAL-ELECTRONIC INSULATOR AS CRC 'U' 02049

## PUMPS MOTOR CONNECTION BOX

N.T.S.

NOTES:
1-. PROVIDE 3/4"ø CONDUIT FROM BOX TO WET WELL FOR CONTROL WIRING (IF NECESSARY).
2-. PROVIDE PADLOCK CAPABLE COVER.

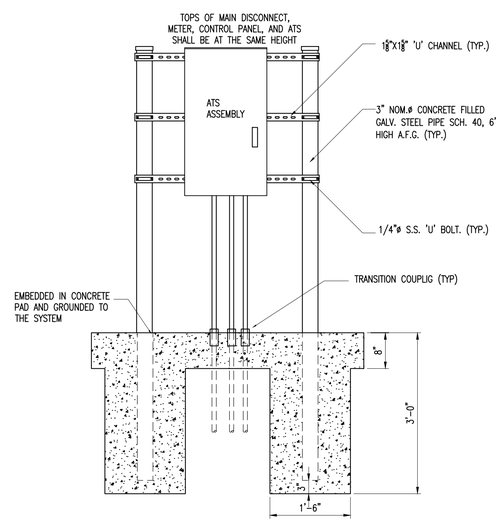


## TYP. ATS STAND

N.T.S.

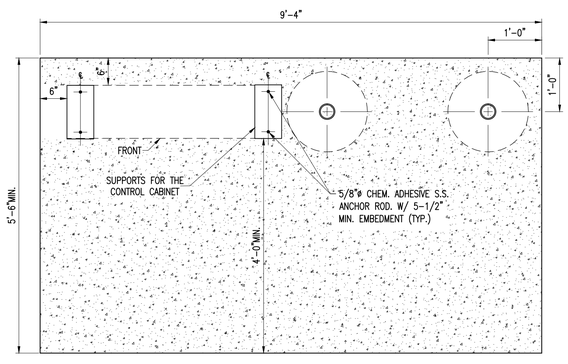


## CONCRETE SLAB AND ANCHORAGE PLAN

N.T.S.

**DANGER**

Arc - Flash Hazard and Shock Hazard

X' - X" - Arc Flash Protection Boundary
XXX - Incident Energy Flash Hazard at 18 inches

CLASS X
Arc - Flash Hazard Risk Category

Appropriate XX PPE Required for both Arc-Flash and Shock Hazards:
Safety Glasses/Goggles, Hard Hat, Flash Suit Hood, Leather Gloves, Leather Work Shoes, Hearing Protection, FR clothing system with an ATPV rating > = X cal/cm2, Class XX Voltage Rated Gloves, Voltage Rated Tools

XXXVAC -- Shock Hazard with covers/doors open
3' -- 6" -- Limited Approach Boundary
1' -- 0" -- Restricted Approach Boundary
0' -- 1" -- Prohibited Approach Boundary

Shock Hazard

LOCATION: PS-XXXX PROTECTIVE DEVICE: Main Circuit Breaker

## ARC FLASH LABEL

N.T.S.
NOTES:
1- LABEL BACKGROUND SHALL BE WHITE COLOR.
2- LABEL LETTERING SHALL BE BLACK COLOR.
3- 'DANGER' WORD SHALL BE WHITE COLOR WITH RED BACKGROUND.
4- LABEL SIZE SHALL BE 4 X 6 INCHES.
5- INFORMATION PRINTED ON LABEL SHALL BE VERIFIED AND PROVED BY CONTRACTOR.
6- THE LABEL SHALL BE LOCATED SO AS TO BE CLEARLY VISIBLE TO QUALIFIED PERSONS BEFORE EXAMINATION, ADJUSTMENT, SERVICING, OR MAINTENANCE OF THE EQUIPMENT NEC 110.16.
7- SEE NOTE 28 OF ELECTRICAL GENERAL NOTES SHEET 1.

THESE ARE NOT CONSTRUCTION DRAWINGS. THE INFORMATION HEREIN CONTAINED SHALL ONLY BE USED AS GENERAL GUIDELINE OF THE INTENDED OPERATION AND FUNCTIONS AND SHALL NOT BE CONSTRUED AS ALL INCLUSIVE. ENGINEERS OF RECORD AND CONSULTANTS USING THESE GUIDELINES SHALL VERIFY AND MODIFY ANY REQUIREMENT NOT NECESSARILY SHOWN AS MAY BE REQUIRED BY ANY AND ALL APPLICABLE CODES AND STANDARDS.

MIAMI-DADE COUNTY
Delivering Excellence Every Day

WATER AND SEWER DEPARTMENT
ENGINEERING DIVISION
3071 SW 38TH AVENUE
MIAMI, FLORIDA 33146-2221
305-665 7471
miamidade.gov

PUMP STATION No. 0000
FACILITY OFFICIAL ADDRESS, FLORIDA 33100-0000

DRY WELL/ WET WELL SEWAGE PUMP STATION
2012 WASD DESIGN STANDARD

ELECTRICAL CONTROL PANEL AND DETAILS

DRAWING HISTORY

| RELEASED FOR | DATE | BY |
|---|---|---|
| REVIEW 30% | | |
| REVIEW 70% | | |
| REVIEW 100% | | |
| PERMIT | | |

REVISIONS

| No. | DESCRIPTION | DATE | BY |
|---|---|---|---|
| | | | |

APPROVALS

CHIEF ENGINEER:
SECTION HEAD:
PROJECT MGR.:
DESIGNED: X.X.X. CHECKED: X.X.X.
DRAWN: X.X.X. FINAL CHECK: X.X.X.

XXXXXXX XXXXX
XXXXXXXXXX Engineer
State of Florida - License No. 00000
Date:_____

ER No. : S000000 PCTS No. : 00000
FILE NAME: 00000E04.DWG
DATE: AUG. 28, 2012 SCALE: AS NOTED

SHEET E-4

DWG. No. S-00000-A