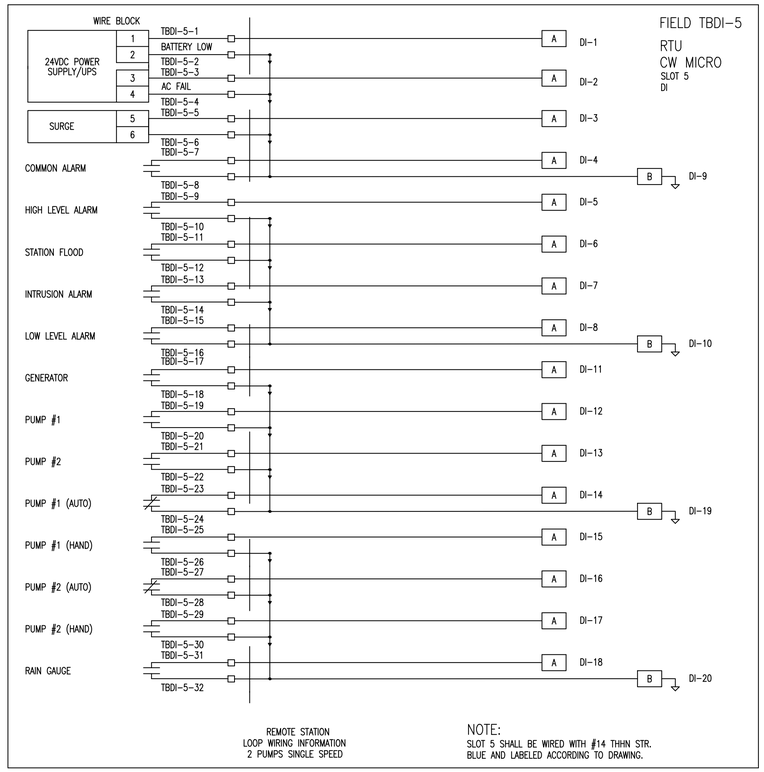

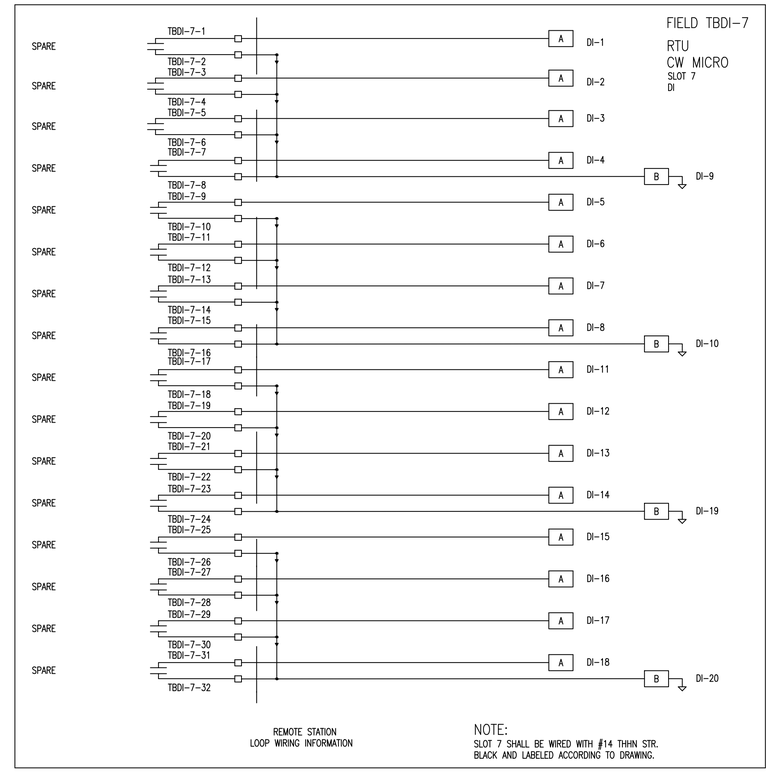

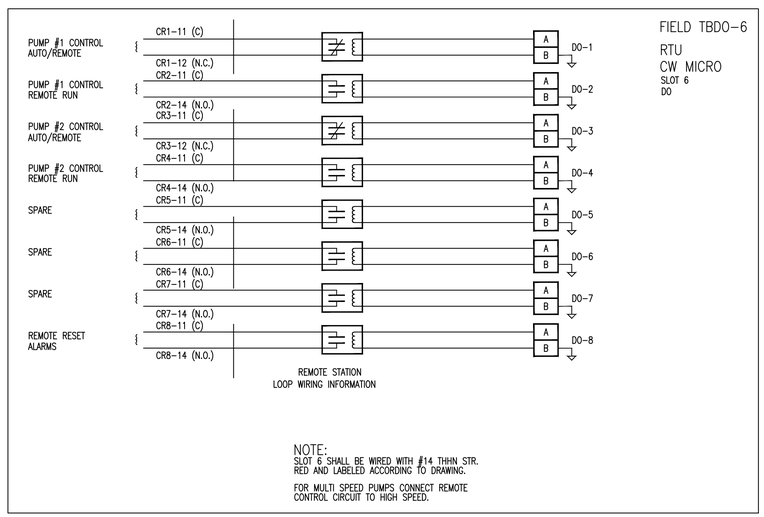

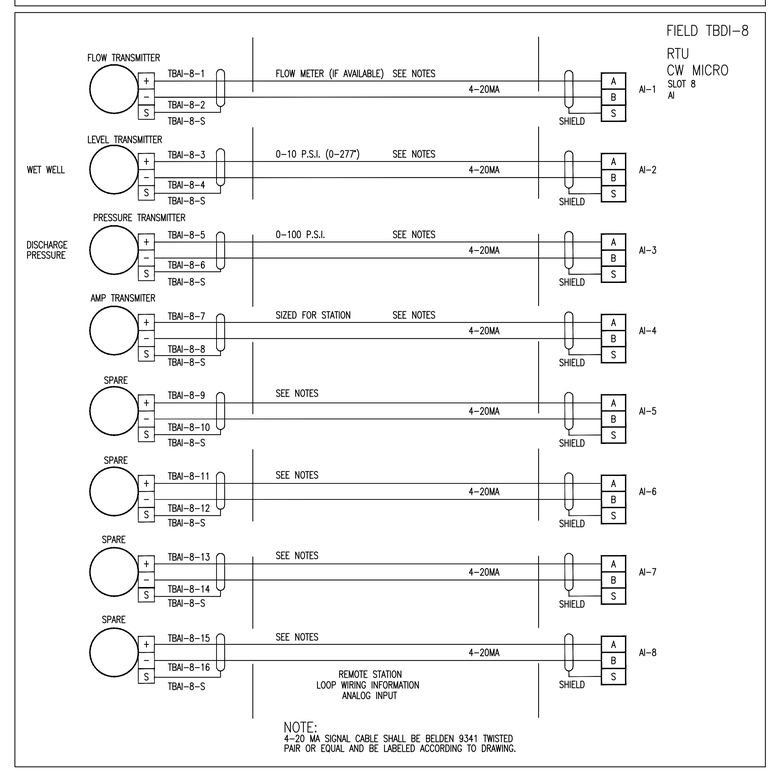

MIAMI-DADE COUNTY
Delivering Excellence Every Day

WATER AND SEWER DEPARTMENT
ENGINEERING DIVISION

3071 SW 38TH AVENUE
MIAMI, FLORIDA 33146-2221
305-665 7471
miamidade.gov

PUMP STATION No. 0000
FACILITY OFFICIAL ADDRESS, FLORIDA 33100-0000

DRY WELL/ WET WELL SEWAGE PUMP STATION
2012 WASD DESIGN STANDARD

R.T.U. INSTALLATION WIRING DIAGRAMS

DRAWING HISTORY

RELEASED FOR	DATE	BY
REVIEW 30%		
REVIEW 70%		
REVIEW 100%		
PERMIT		

REVISIONS

No.	DESCRIPTION	DATE	BY

APPROVALS

CHIEF ENGINEER:
SECTION HEAD:
PROJECT MGR.:
DESIGNED: X.X.X. CHECKED: X.X.X.
DRAWN: X.X.X. FINAL CHECK: X.X.X.

XXXXXXX XXXXX
XXXXXXXXXX Engineer
State of Florida – License No. 00000
Date:_____

ER No. : S000000 PCTS No. : 00000
FILE NAME: 00000E05.DWG
DATE: AUG. 28, 2012 SCALE: AS NOTED
SHEET E-5
DWG. No. S-00000-A